April 1, 1924. 1,488,723

J. T. WELSH

STEERING GEAR

Filed April 16, 1920 4 Sheets-Sheet 1

Fig. 1.

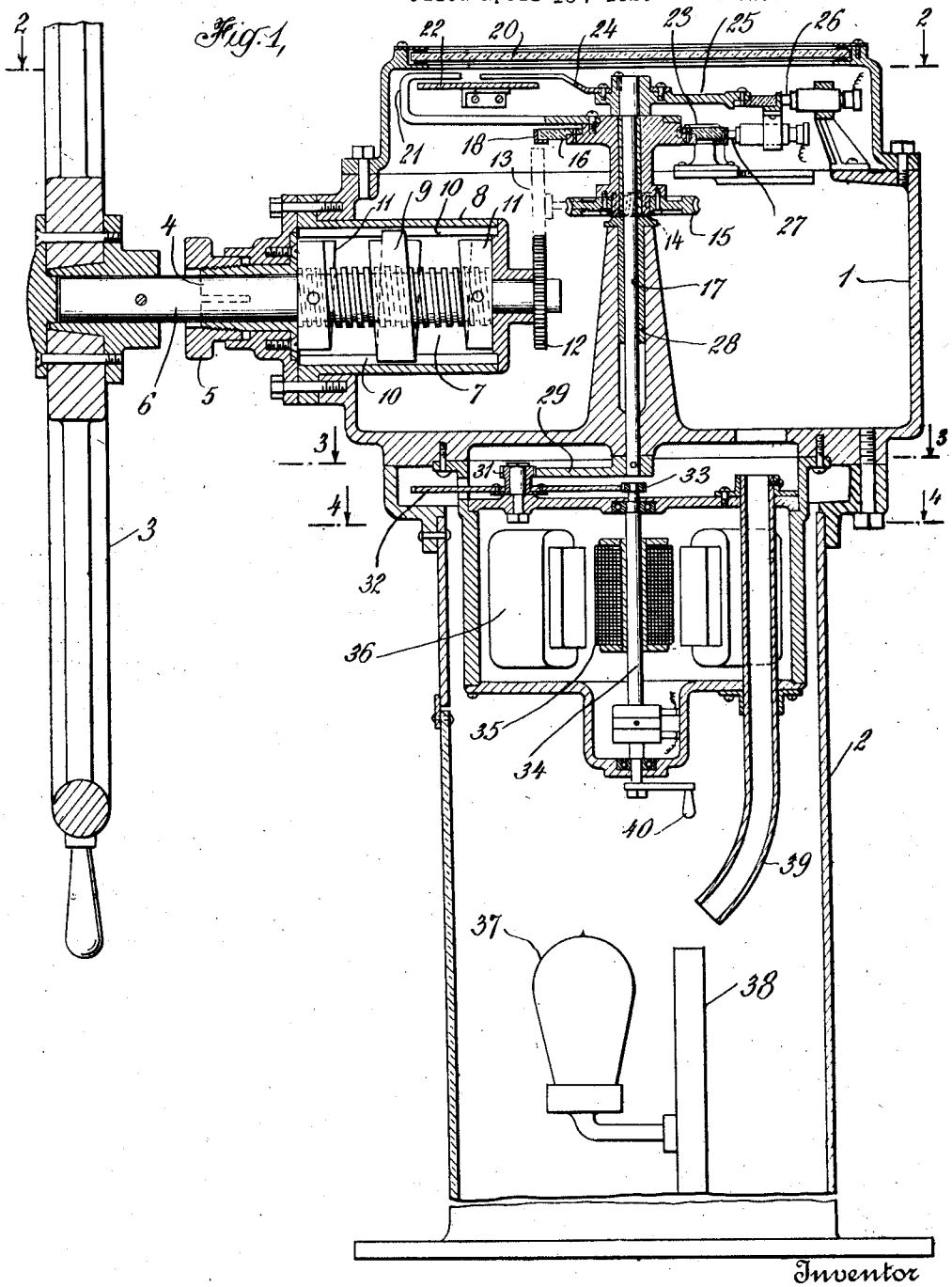

Inventor

By his Attorneys J. T. Welsh,

April 1, 1924. 1,488,723

J. T. WELSH

STEERING GEAR

Filed April 16, 1920 4 Sheets-Sheet 2

Fig. 2,

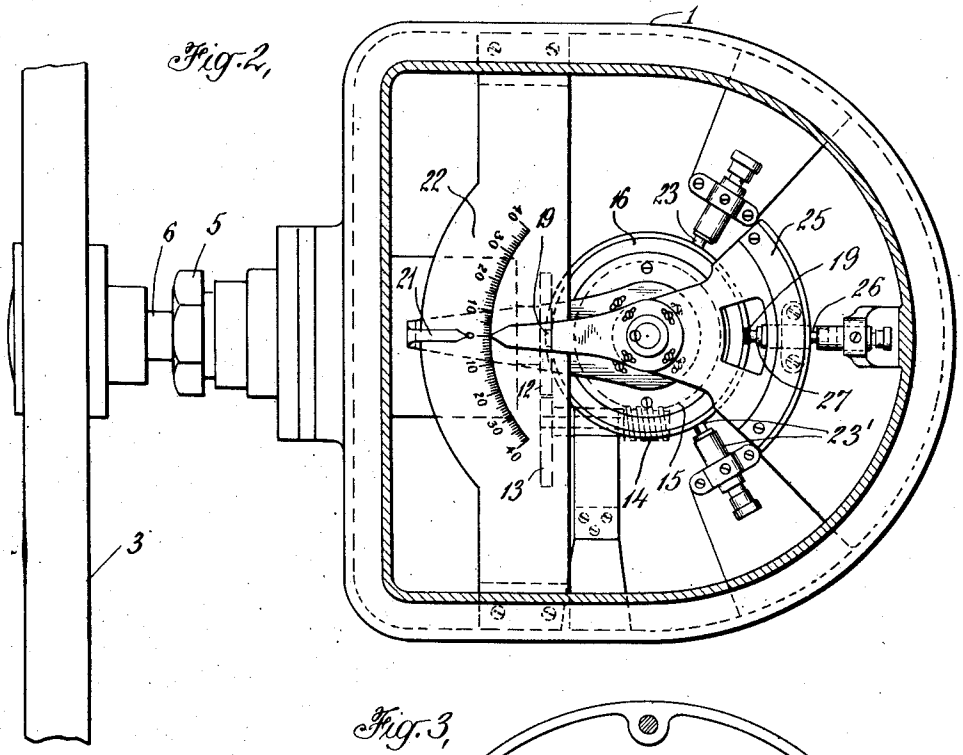

Fig. 3,

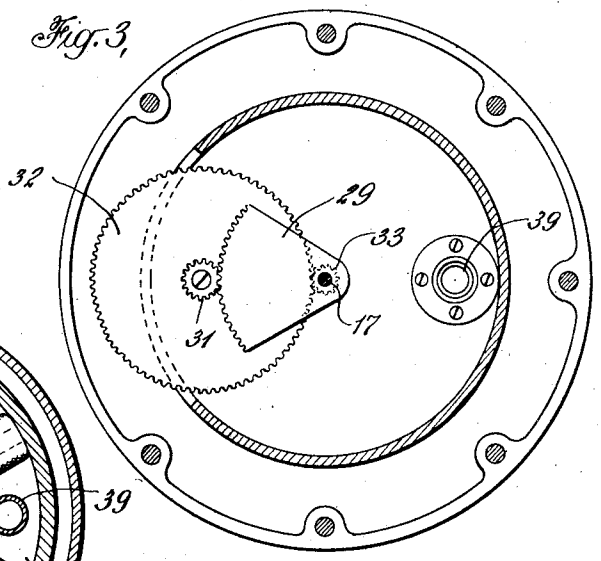

Fig. 4,

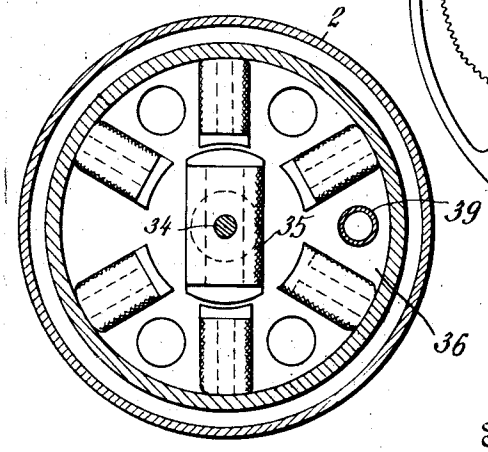

Inventor

By his Attorneys J. T. Welsh.

Pennie Davis Marvin & Edmonds.

April 1, 1924. 1,488,723

J. T. WELSH

STEERING GEAR

Filed April 16, 1920 4 Sheets-Sheet 3

Fig. 5,

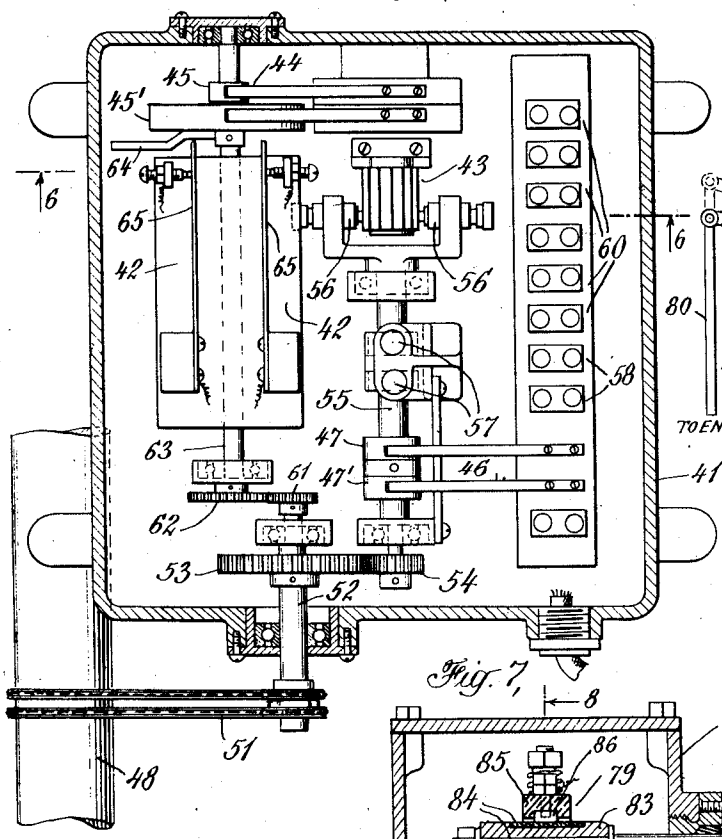

Fig. 9,

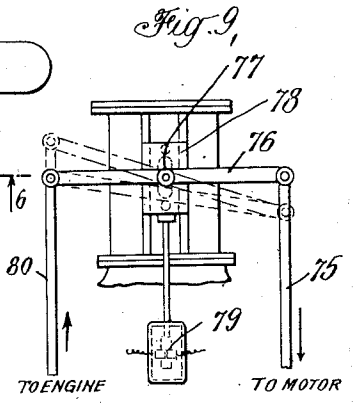

Fig. 7,

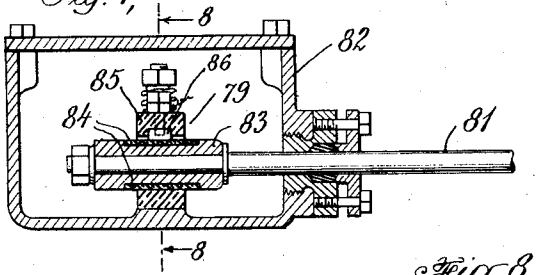

Fig. 6,

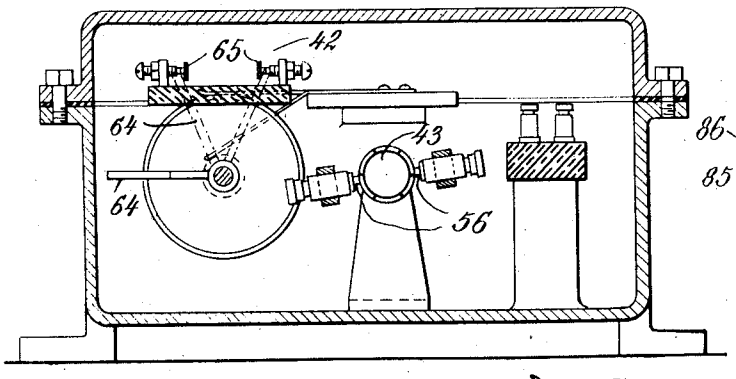

Fig. 8

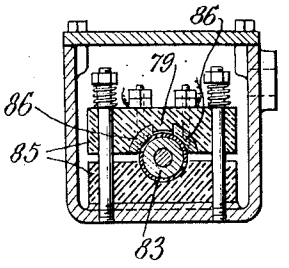

Inventor
J. T. Welsh

By his Attorneys
Pennie Davis Marvin & Edmonds.

April 1, 1924. 1,488,723

J. T. WELSH

STEERING GEAR

Filed April 16, 1920 4 Sheets-Sheet 4

Fig. 10.

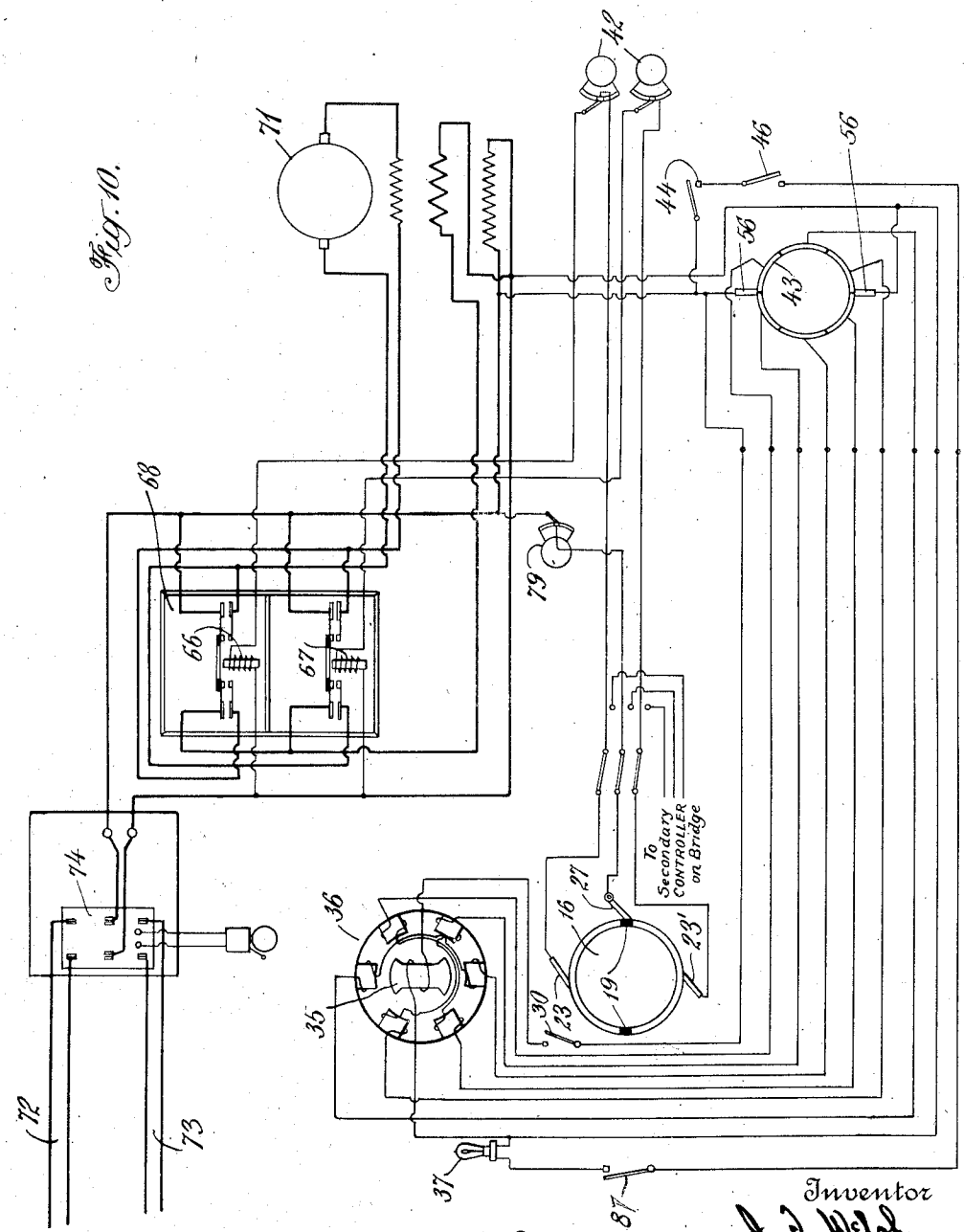

Inventor
J. T. Welsh
By his Attorneys

Patented Apr. 1, 1924.

1,488,723

UNITED STATES PATENT OFFICE.

JOHN T. WELSH, OF SCHENECTADY, NEW YORK, ASSIGNOR TO ARMA ENGINEERING CO., INC., A CORPORATION OF NEW YORK.

STEERING GEAR.

Application filed April 16, 1920. Serial No. 374,259.

To all whom it may concern:

Be it known that I, JOHN T. WELSH, a citizen of the United States, residing at Schenectady, in the county of Schenectady, State of New York, have invented certain new and useful Improvements in Steering Gears; and I do hereby declare the following to be a full, clear, and exact description of the invention, such as will enable others skilled in the art to which it appertains to make and use the same.

This invention relates to the steering of ships and more particularly to a control system in which movement of the pilot or trick wheel puts in operation certain intermediary machines which in their turn move the rubber. In the steering of large vessels it is, of course, necessary that the steering engine which ultimately swings the rudder should be under the quick and accurate control of the pilot, and it is furthermore highly desirable that the pilot know of the exact position of the rudder at all times through some reliable checking or follow-up system. To these ends the system described in detail herein has been devised although it is clear that the invention is fundamentally broader than the specific embodiment of it disclosed in this application.

Various control systems have been devised and are in use whereby motion of the trick wheel operates the steering engine. Control from the wheel to the steering compartment is transmitted in some instances by means of shafting, and in others by means of wire ropes which operate drums in the steering compartment. The use of hydraulic telemotors is also old as is well understood. In every instance it is, of course, necessary that some means be present whereby the steering engine is stopped with the stopping of the trick wheel, allowing, of course, for a compensating lag. This is ordinarily effected by means of a follow-up device or differential through which the engine itself closes its own valve when the control means has ceased to operate. In these systems the control mechanism is complex and cumbersome and easily disarranged. Moreover, no satisfactory means have been devised for accurately turning the rudder to an exact, predetermined position, nor has any simple follow-up system been evolved by means of which the pilot is apprised of the exact position of the rudder at all times.

It is accordingly an object of this invention to devise a motor system of steering control which shall be electrically operated and in such a manner that every movement of the trick wheel shall cause instant operation of an electric motor and consequent immediate opening of the control valve of the steering engine; the angle through which the rudder is thereby turned being directly determined by the number of turns of the trick wheel.

A further object of the invention is to devise an answer-back or follow-up system cooperating with the first system and having a dual function, by means of which the movement of the rudder itself operates, first, to stop the steering engine when the predetermined position has been reached, and, second, to move a tell-tale pointer in the pilot house indicating the exact position of the rudder.

A further object of the invention is to provide the system with electrically operated safety devices which prevent the control valve of the steering engine from being opened too far and the rudder from going hardover in either direction; and an auxiliary checking system indicating when the rudder is in central position.

Other objects will be apparent from the detailed description of the system and its operation which follows.

Although the system operates as a unit, in a manner to be described later, it may yet be considered as consisting of two major parts. The first of these embraces the means which operate to move the rudder, and the second those means which operate to stop it. The first comprises as its main elements a trick wheel or other controlling device, a master controller located in the wheelhouse, a remote control relay, a master steering motor and a steering engine operated by the motor. The second part comprises as its main elements a transmitter mechanism operated by the rudder post, and an electromotive device in the master controller synchronized with this transmitter. The rudder itself is, of course, an element of both parts of the system.

In addition to these major parts there are auxiliary elements such as a limit switch

connected to the control valve of the steering engine to prevent its being opened too far, other limit switches operated by the rudder post to keep the rudder from going hard-over in either direction, and a lamp in the master controller which lights when the rudder is in central or midship position. There are also two pointers in the master controller, one operated by the trick wheel, and the other a tell-tale pointer operated by means of the follow-up mechanism.

In order that the specific embodiment of the invention may be more clearly understood reference is had to the accompanying drawings; in which—

Fig. 1 is a vertical section through the master controller;

Fig. 2 is a plan view of the master controller showing the main indicator and the tell-tale pointer;

Fig. 3 is a horizontal section on the line 3—3 of Fig. 1 showing the train of gears whereby the movable brush and tell-tale pointer are operated;

Fig. 4 is a horizontal section on the line 4—4 of Fig. 1 showing the electromotive device which is synchronized with the transmitter;

Fig. 5 is a vertical section through the water tight casing which contains the transmitter, the rudder limit switches and the contacts actuated by the rudder for lighting the lamp in the master controller. This mechanism is shown in its relation to the rudder post;

Fig. 6 is a section taken on line 6—6 of Fig. 5;

Fig. 7 is a vertical section through the limit switch used to limit the movement of the motor;

Fig. 8 is a transverse section taken on line 8—8 of Fig. 7;

Fig. 9 is an elevation of the differential or follow-up mechanism used in opening and closing the steam valve of the steering engine; and

Fig. 10 is a diagrammatic view of the wiring employed.

The following is a detailed description of that part of the system which operates primarily to move the rudder: Attention is first called to Figs. 1 and 2. The master controller is mounted in a polished brass bowl 1 supported by a pedestal 2. A steering wheel, or trick wheel 3 is mounted in this bowl. Although a wheel has been illustrated as the primary controlling device, it is, of course, obvious that other equivalent means, such as levers, could be employed. As practically no work is done by the pilot in moving the controlling device, the great leverage of the old-fashioned steering wheel is unnecessary. A friction brake comprising a threaded split sleeve 4, and a correspondingly threaded nut 5 is provided to regulate the pressure upon the shaft 6 of the trick wheel, thereby regulating the freedom with which this wheel may be turned. The inner end of the shaft 6 is threaded as at 7 and enclosed within a housing 8. A sliding threaded nut 9 is mounted upon the threaded portion of shaft 6, and is moved longitudinally thereof along trackways 10. This nut contacts at either end of the housing with fixed blocks 11, and thus limits the rotation of trick wheel 3 in either direction. The trick wheel, through pinions 12 and 13, worm 14 and worm wheel 15, turns the contact disc 16 which is journaled on shaft 17, which is itself journaled in sleeve 28. This contact disc is provided with a peripheral contact ring 18 having two halves which are insulated from each other by insulating or neutral spots 19. Fixed to this contact disc is a pointer 21 which moves over an arcuate scale 22, and indicates the degree through which the pilot wishes to turn the rudder. Pointer and scale are visible to the pilot through glass 20 and the pointer may be painted with radium paint for night steering.

Mounted within the polished brass bowl 1, and contacting with the contact ring of the disc 16, are two fixed brushes 23 and 23′, shown in Fig. 2 as being spaced apart about 120°, and diagrammatically in Fig. 10 about 180°. Fixed to the upper end of shaft 17 is a fan-shaped contact segment 25 which as it moves, constantly contacts with a fixed brush 26. Depending from this fan-shaped contact segment 25 and fixed medially thereof is a movable brush 27 which contacts with the periphery of disc 16 and may be oscillated relative thereto in a manner and for a purpose to be described later.

Leads from the fixed brushes 23 and 23′, and from movable brush 27 through contact segment 25 and brush 26, pass to remote control relays 66 and 67 which are mounted in cabinet 68 in the steering engine room and control the operation of compound wound motor 71 which operates the steam control valve of the steering engine. Power is supplied to the entire system either through line 72 or auxiliary source 73 such as a battery controlled by an automatic throw-over switch 74 of any approved type. As shown in Fig. 10, clockwise movement of contact disc 16 completes a circuit through brushes 23 and 27 and relay 66, thus energizing this relay and closing a circuit through the primary source of power and the motor. Counterclockwise movement of disc 16 completes a circuit through brushes 23′ and 27 and relay 67. Operation of this relay completes a circuit through the primary source of power and the motor, but in such a manner (as will be obvious from an inspection of Fig. 10) that current flows in a direction the reverse of that resulting

when relay 66 is energized, and with consequent reverse rotation of motor 71.

Operation of motor 71 causes longitudinal movement of rod 75 (see Fig. 9) through appropriate mechanism, not shown; the direction of movement of this rod being, of course, dependent upon the direction of rotation of the motor. Connected to rod 75 is a cross-arm 76 swivelled at 77 to the steam control slide valve 78 of the steering engine. Pivoted to the other end of arm 76 is a rod 80 which is longitudinally moved by the steering engine. Rotation of the motor causes rod 75 to move, let us say, in the direction indicated by the arrow in Fig. 9, and consequently causes cross-arm 76 to take approximately the position indicated by lower dotted line showing, thus opening the steam control valve of the steering engine. As soon, however, as this valve is open and the engine begins to operate, rod 80 is moved in the opposite direction as indicated, and returns cross-arm 76 to the position shown in upper dotted line showing, thus automatically closing the valve, stopping the engine and consequently stopping the movement of the rudder; the latter being directly controlled by the steering engine in any approved manner. There is, of course, a momentary lag at this point. The motor operates a few seconds before the rudder moves, but this is compensated by the fact that the rudder continues to move a few seconds after the motor stops.

The description thus far has had to do with those parts of the system which operate to move the rudder. But as soon as this movement begins the follow-up mechanism immediately operates to stop it, and does so at the proper point. The following is a description of this second part of the system:

In Figs. 5 and 6 is shown a watertight casing 41 which contains transmitter 43 and its operating mechanism. This mechanism is operated by movement of the rudder post 48 through appropriate chain gearing 51. Two sprocket chains are employed, the active run of each being held taut by means of a spring. By this arrangement there is no slack to be taken up and no lost motion when the direction of movement of the rudder is changed. Rotation of shaft 52 through meshing gears 53 and 54 causes rotation of shaft 55 on which are positioned brushes 56 of transmitter 43. This shaft 55 is geared up so that a relatively slight movement of rudder post 48 will cause shaft 55 and brushes 56 to be rotated several times. Current is supplied to brushes 56 through brushes 57, which in turn are connected with contacts 58, which receive current from the primary source of power. The transmitter 43 is synchronized with an electromotive device 36 which is located in the master controller and operates a tell-tale pointer 24 and movable brush 27. The current passing through brushes 56 of the transmitter is led through the various segments thereof and contacts 60 to the corresponding field magnets of the electromotive device 36 in a manner clearly shown in Fig. 10. As the rotation of the transmitter brushes is directly controlled by the movement of the rudder post, the armature 35 of the electromotive device 36 places itself in a position corresponding to that of the rudder, and this, through a chain of gears, to be described later, is transmitted to the tell-tale pointer 24 in a manner easily understood.

Attention is again called to Figs. 1 and 2. Mounted in the upper part of pedestal 2 is an electromotive device 36 operated in synchronism with transmitter 43, as described above. Armature 35 of this device is fixed upon a vertically rotatable shaft 34, and at the upper end of this shaft is fixed a pinion 33 meshing with gear 32 (see Fig. 3). Integral with gear 32 and coaxial therewith is a pinion 31, meshing with segmental gear 29 which is mounted on the lower end of shaft 17. At the upper end of this shaft 17, and diametrically opposed to contact segment 25, is fixed tell-tale pointer 24 which moves over scale 22 and opposite to pointer 21. Rotation of the transmitter causes synchronous rotation of the armature 35 and shaft 34 of device 36 in a direction determined in the first instance by the direction of movement of the rudder post. This rotation of shaft 34, through the chain of gears above described causes a swinging of contact segment 25 and tell-tale pointer 24. The contact segment carries movable brush 27 to neutral spot 19, which breaks the circuit through the then energized relay and consequently stops the motor. At the same time the tell-tale pointer indicates the exact position of the rudder which should coincide with that indicated by pointer 21. If the steam control valve in the steering engine is open far enough to carry the movable brush by the insulated space in the ring before it is closed, the other relay operates to reverse the steering engine and brings it back to the position corresponding to the position of the trick wheel. The over-running of the rudder is guarded against in the design of the length of the insulated space in the contact ring. A handle 40 is secured to the lower end of shaft 34, by means of which pointer 24 may be accurately set. The tell-tale pointer may, of course, be painted with radium paint for night steering.

The foregoing description embraces all those elements which are fundamentally essential to the operation of the system. Certain safety devices are, however, highly de-

sirable. The first of these is used in connection with the control valve of the steering engine (see Figs. 7, 8, and 9). In order to prevent the motor from operating this valve past the follow-up position, the limit switch 79 is provided. This limit switch comprises a rod 81 which extends from slide valve 78 and into the housing 82. An insulated cylinder 83 is fitted over the extremity of rod 81, and a band of conducting material 84 surrounds this insulating cylinder at its midle. This end of rod 81 slides in a bearing of insulating material 85 having two arcuate conducting members 86 situated in the upper portion thereof, as clearly shown in Figs. 7 and 8. If the valve is moved too far in either direction the current which flows through members 86 and 84, and which is the primary current operating the motor 71, is interrupted. Thereupon the motor stops and the steering engine returns the valve to a point where the conducting elements of the limit switch again contact, and operation of the motor is resumed.

Limit switches are also provided for preventing the rudder from going hardover in either direction. (See Figs. 5 and 6). Rotation of shaft 52 through meshing gears 61 and 62 causes limited rotation or oscillation of shaft 63. The train of gears through which shaft 63 is actuated is so designed that this shaft oscillates through a slightly greater angle than the rudder post. When the rudder is approaching the hardover positions, arm 64 assumes the positions indicated in dotted lines on Fig. 6, and bears against yielding contact members 65 of limit switches 42, thus interrupting the circuit to the motor and stopping the steering engine.

Means have also been devised for checking the tell-tale pointer and the follow-up mechanism. This means comprises an electric lamp 37 mounted in the base of the master controller which lights when the rudder is in central or midship position, and is made visible to the pilot through suitable openings. This lamp is lighted as follows, attention being called again to Fig. 5: Two rotary contact breakers 44 and 46, each comprising two concentric discs 45 and 45′, and 47 and 47′ respectively, are fixed, the first upon the shaft 63, and the second on shaft 55. These contact breakers are arranged in series, and through them, when in operative position, flows the current which lights lamp 37. Connecting and conducting segments are placed in discs 45, 45′ and 47, 47′ in such maner that when the rudder is in its central position these segments contact with their respective brushes, current flows, and the lamp is lighted. A very slight movement of the rudder post, however, results in a sudden turning of shaft 55 through the gearing described before, and a consequent displacement of the conducting segments of discs 47, 47′. This results in a sudden break in the lamp circuit and darkening of the lamp. If the rudder continues to turn in the same direction the circuit is also broken at 44 before discs 47, 47′ make one complete revolution. The above described arrangement of contact breakers assures a very quick break in the lamp circuit and permits the light to shine only when the rudder is exactly in midship position.

Lamp 37 is mounted upon a switchboard 38 in the base of the master controller. Upon this board are also mounted a double-throw switch (not shown) which disconnects the master controller and connects in a secondary controller on the bridge, and a switch 30 (see Fig. 10) which controls the common lead of the follow-up circuit. Also in the lamp circuit is a switch 87 for disconnecting the lamp 37.

The operation of the system may be briefly reviewed as follows:—

The pilot turns the trick wheel until pointer 21 indicates the degree through which he desires to turn the rudder. Contact disc 16 is thus rotated through a small arc and a circuit established through one of the fixed brushes, one of the halves of the contact ring, the movable brush and one of the relays 66 or 67. This movement is, of course, relative and the brushes might move about a fixed contact disc. A relay is thus energized and the motor 71 caused to rotate in the appropriate direction. Rotation of the motor opens the steam control valve of the steering engine which in turn swings the rudder. If the motor operates the control valve of the steering engine past the follow-up position, the limit switch 79 opens the common control circuit and stops the motor, but as soon as the steering engine starts to close the control valve, the circuit is again completed. As soon as the motor opens the valve, the engine itself, through rod 80, tends to close it. As long, however, as the motor is running, the engine cannot overcome its lead and the valve remains open. The swinging motion of the rudder operates transmitter 43, which in turn causes synchronous rotation of electromotive device 36, and this in turn causes the movable brush 27 to swing until it contacts with the insulated or neutral spot 19, and carries with it tell-tale pointer 24. When this neutral position is reached the current through the relay is interrupted, the relay ceases to operate, and the motor stops. The moment the motor stops, the steering engine, through rod 80 automatically begins to close the steam control valve and the rudder stops. The system is now in equilibrium and both pointers in the master controller are in line.

Claims:

1. In a system of steering control, the combination of a rudder, a master controller for controlling the parts of the system which operate to move the rudder, and means for checking the system, including indicating means associated with the master controller and operated by an electric circuit; two contact makers arranged in series in the circuit, both being operated in accordance with the movement of the rudder, the operation of one being substantially quicker than that of the other; the relation of the foregoing parts being such that when the rudder is in central or midship position, current flows in the circuit and causes said indicating means to operate, said checking means being inoperative when the rudder is in any other position.

2. In a system of the type described, a controller comprising a single split ring, the halves of which are separated by sections of insulating material, two stationary brushes contacting one with each half of the ring, a movable brush normally contacting with one of the insulating sections, means for moving the ring and brushes relative to each other to cause the movable brush to make contact with one of the halves of the ring whereby an electric current may be established through that half, means for supplying electric current to said movable brush, means for returning said brush to its normal position, a pointer carried by said ring, and a tell tale pointer associated with said movable contact to indicate at all times the position of the rudder of the system.

3. In a system of the type described, a motor, a steering engine, means operated by the motor to open the control valve of the engine, means actuated by said valve for stopping the motor when said valve has been opened to a predetermined position and means actuated by said engine tending gradually to close said valve, said valve actuated means being adapted to start said motor again after said valve has been displaced by said engine from the predetermined position.

In testimony whereof I affix my signature.

JOHN T. WELSH.