(No Model.) 2 Sheets—Sheet 1.

B. JASSEN.

PLOW AND SEED PLANTER.

No. 586,360. Patented July 13, 1897.

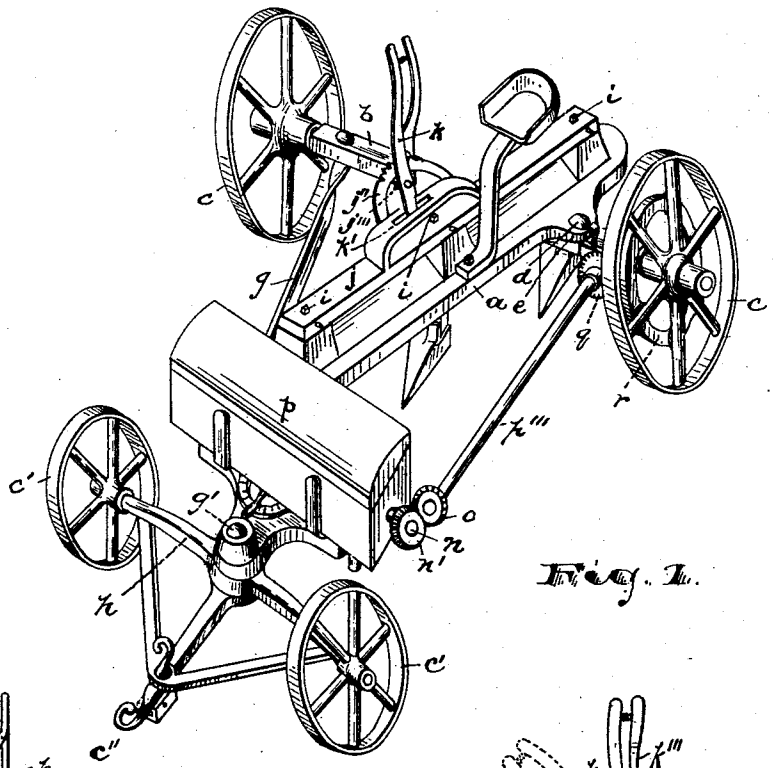

Fig. 1.

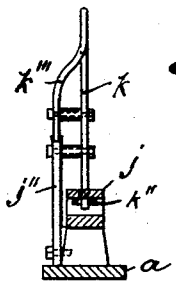

Fig. 2.

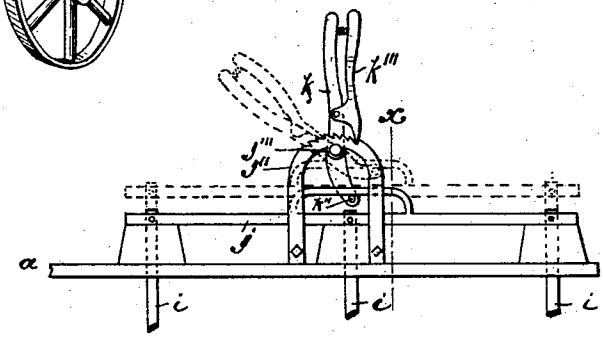

Fig. 3.

WITNESSES:
R. B. Blosmeke
C. B. Pitney.

Bern Jassen, INVENTOR.

BY Drake & Co. ATTY'S.

THE NORRIS PETERS CO., PHOTO-LITHO., WASHINGTON, D. C.

(No Model.) 2 Sheets—Sheet 2.

B. JASSEN.

PLOW AND SEED PLANTER.

No. 586,360. Patented July 13, 1897.

Fig. 4.

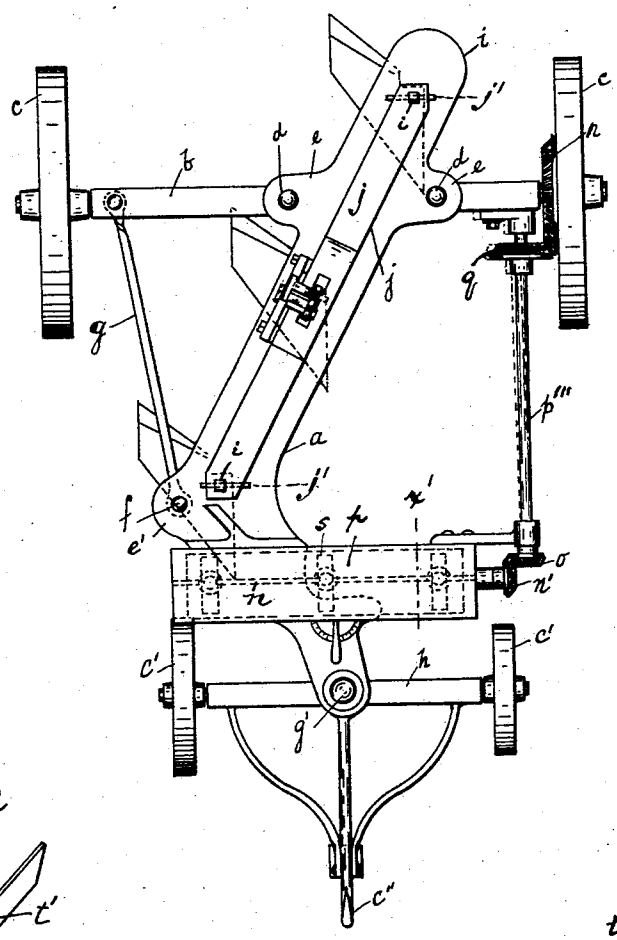

Fig. 5.

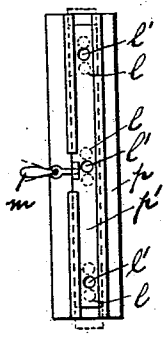

Fig. 6.

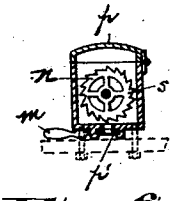

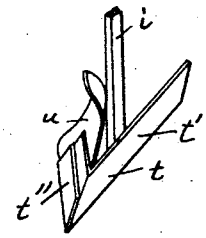

Fig. 7.

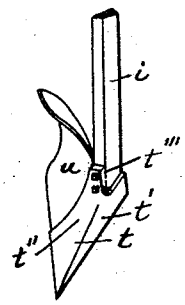

Fig. 8.

WITNESSES:
R. B. Bloomfield
C. B. Sitney.

Bern Jassen, INVENTOR.

BY Drake & Co.

ATTORNEYS.

THE NORRIS PETERS CO., PHOTO-LITHO., WASHINGTON, D. C.

UNITED STATES PATENT OFFICE.

BERN JASSEN, OF IRVINGTON, NEW JERSEY.

PLOW AND SEED-PLANTER.

SPECIFICATION forming part of Letters Patent No. 586,360, dated July 13, 1897.

Application filed October 30, 1896. Serial No. 610,545. (No model.)

To all whom it may concern:

Be it known that I, BERN JASSEN, a subject of the Czar of Russia, residing at Irvington, in the county of Essex and State of New Jersey, have invented certain new and useful Improvements in Plows and Seed-Planters; and I do hereby declare the following to be a full, clear, and exact description of the invention, such as will enable others skilled in the art to which it appertains to make and use the same, reference being had to the accompanying drawings, and to letters of reference marked thereon, which form a part of this specification.

This invention relates to certain improvements in that class of plows in which plowshares are disposed in a series on an oblique carrying beam or bar arranged horizontally upon suitable wheels.

The objects of the present improvements are to reduce the cost of construction and to provide a device of greater strength compared with one having a greater amount of metal and structural parts, to facilitate the operation of plowing and reduce the power employed in propulsion, to enable a greater or less number of furrows to be made at one time to suit peculiar conditions, to allow deeper or more shallow furrows to be made at the convenience of the operator, to enable seed to be planted during the plowing operation with ease and regularity, and to secure other advantages and results, some of which may be referred to hereinafter in connection with the description of the working parts.

The invention consists in the improved plow and in the arrangements and combinations of parts, all substantially as will be hereinafter set forth, and finally embraced in the clauses of the claim.

Referring to the accompanying drawings, in which like letters of reference indicate corresponding parts in each of the views, Figure 1 is a perspective of the improved plow. Fig. 2 is a detail section taken at line x, Fig. 3. Fig. 3 is a side view showing means for holding the plowshares at various elevations to suit different conditions. Fig. 4 is a plan thereof of the plow. Fig. 5 is a bottom detail view of a certain seedbox, showing a slide or valve for controlling the outflow of the seed. Fig. 6 is a sectional view of the seedbox, taken at line x' of Fig. 4; and Figs. 7 and 8 are perspective detail views of certain plowshares and moldboards which may be employed in the plow.

In said drawings, a indicates a heavy cast-metal plow-body comprising an L-shaped piece. The longer arm or extension of the said casting is arranged diagonally across an axle b between the wheels c c on its opposite ends, and said casting is rigidly and securely fastened to said axle by bolts d, the casting being preferably provided with ears e to admit of the bolts being disposed at a suitable distance apart on the said axle. The shorter arm at the forward end of the longer diagonal or oblique arm or extension of the casting is also oblique in its relation to the forward-wheel axle, being approximately at right angles to said longer arm and extending to a point midway between the forward wheels of the plow.

At the angle formed by the long and short arms of the casting a third ear or flange e', Fig. 4, is formed, which is perforated to receive a bolt f. At this point a brace g connects the said casting with the rear axle, the said brace being attached to said axle at a point distant from that at which the longer arm of the casting crosses said axle, so as to secure the desired strength and rigidity of connection.

The short arm inclines forward from the end of the long arm to a point in the line of draft upon the vehicle, midway between the front wheels, where it provides a pivotal bearing for the pin or pivot g', by means of which the angular casting is attached to the front axle. At its opposite ends said front axle is provided with wheels and is upwardly turned at its center, as shown in Fig. 1. The longer arm inclines rearwardly from the end of the shorter arm and crosses the center axis of the vehicle in or at the line of draft, so that the said long arm lies about equally on both sides of said line, and the plowshares may be equally disposed, so as to prevent an unequal draft upon the horses and a loss of power in securing a proper forward movement of the plow. In said line of draft the front axle is provided with a draft-pole c'', or shafts, chains, or other

suitable means by which the horses or other animals, device, or power may be hitched or connected to the plow.

At a series of points in the length of the longer diagonally-disposed arm of the casting *a* the same is perforated and provides boxes or bearings for the adjustable standards *i i*. Said standards are secured to an adjustable carrier *j* on the upper side of the body and held thereto by pins *j'* or other suitable means, so that when said carrier is raised or lowered the plowshares will become correspondingly raised or lowered simultaneously. To raise and lower the carrier *j*, I provide a ratchet *j''*, fastened to the body *a* in any suitable manner, and to an ear *j'''* of said ratchet I pivot a hand-lever *k*, so that when said lever is turned on its pivot or fulcrum it will raise the carrier, the said lever at its lower end working in a slot *k'* in the carrier and being provided with pins or lugs *k''*, which lie against an under surface of said carrier to raise the same, as will be understood upon examination of Fig. 3. A pawl *k'''* is pivoted upon said lever and engages the ratchet-teeth to prevent pivotal movement except when manipulated by the hand.

At the forward part of the plow-frame the casing *a* preferably carries a seedbox *p*, having at the bottom a series of perforations *l* to admit of the seed passing out. Said seedbox on the under side is also provided with a slide or valve *p'*, having coinciding perforations *l'*, and having means whereby the position of the slide may be adjusted at will to either open the perforations entirely or fully close the same, or vary the size of the seed-passages by more or less fully closing the same. A hand-lever *m* preferably serves to operate the slide and graduate the perforations or passages.

Within the box *p* is arranged a longitudinal shaft *n*. This extends outside of the box at one end thereof. At its projecting end is a bevel gear-wheel *n'*, which connects through a bevel gear-wheel *o*, shaft *p'''*, bevel gear-wheels *q* and *r* with the wheels *c* of the plow, the part *r* being preferably cast on one of said wheels *c*, so that as the plow moves forward it will transmit movement to the said shaft *n*, as will be understood upon reference to Fig. 4. Within the box *p* upon the said shaft *n*, adjacent to the valve-openings or seed-passages, are arranged mixing-wheels *s*. (Shown more clearly in Fig. 6.) These serve to keep the seed in commotion, so that the seed-passages will remain free to admit the outpassage of the seed and secure an even distribution. The box may be provided with a cover or be otherwise provided with means to admit of the said box being replenished.

Upon the standards *i* are arranged improved plowshares *t* and moldboards *u*, such as shown in Figs. 7 and 8, although they may be otherwise formed. The plowshares are made of heavy sheet-metal plates bent in a line extending back from the point at a low inclination, the metal at one side of said backwardly-extending inclined line extending vertically downward, as at *t'*, to a horizontal plane of said point, and at the opposite side inclining down to said horizontal plane, as at *t''*, at a very gentle slope, the share thus formed providing a horizontal pointed blade having the vertical edge extension *t'* and having a recess due to the bending, into which a horizontally-turned foot of the standard (not shown) may lie.

At the back end of the share the same is recessed to receive the vertical part of the standard and has a vertical tongue *t'''* at said recess, which serves in holding the share in place upon said standard. The rearwardly-extending inclined bend extends back to said recess and standard, so that the inclined surface of the blade will be long and low in front of the standard.

To the share, at the inclined side thereof, is fastened the moldboard, which in the preferred construction of Fig. 8 is forwardly concave, the upper part of the curved moldboard extending laterally over beyond the limit of the lateral extension of the said inclined side of the share, so as to throw the dirt and thoroughly crumble or pulverize it.

In practice, by means of my improved construction, I am enabled to plow the ground and break up the clods to such a fineness and with such thoroughness and evenness that subsequent harrowing is unnecessary preliminary to planting the seed of corn, wheat, rye, &c.

Having thus described the invention, what I claim as new is—

1. The combination with the front and rear axles, each having wheels at opposite ends and the former having, between the wheels, draft connections, of a frame comprising an L-shaped casting, the short arm of which is inclined to the center line of draft between the wheels and receives the pivotal pin by which the said casting is pivoted to the axle, and the longer arm inclining backward from the rear end of the shorter arm across the center line of draft and being fastened to the rear axle between the wheels thereof and a series of plowshares held by suitable standards to said longer arm on opposite sides of said line of draft, all substantially as set forth.

2. The combination with the front and rear wheeled axles, the former provided with draft devices, centrally between the wheels thereof, of a frame comprising an L-shaped casting having a long and a short arm which are disposed at inclinations to the said axles, the shorter arm being pivoted to the forward axle in the center line of draft, midway between the forward wheels, and the longer arm extending across the said center line of draft and providing bearings on opposite sides of said center line for adjustable plowshares and moldboards, said adjustable plowshares and moldboards, and means for adjusting the same, substantially as set forth.

3. The combination with the parallel axles

each having wheels at their extremities of an L-shaped casting, the long arm of which is rigidly secured to the rear axle between said wheels and the short arm, at its extremity is pivotally secured to the front axle midway between said wheels, the long arm extending across the line of draft in which the forward pivot lies, a brace connecting the angle of the L-shaped casting to the rear axle, draft devices between the front wheels, standards *i*, arranged in boxes or bearings in the longer arm and secured to a single adjustable slotted carrier *j*, on the upper side of the body, a ratchet *j''*, fastened to the casting, a pivotal hand-lever *k*, having pins or lugs *k''*, a pawl *k'''*, and shares and moldboards attached to said standards, all substantially as set forth.

4. The improved plow herein described comprising a standard, a share consisting of a bent sheet-metal plate, projecting vertically downward from the inclined, rearwardly-extending line of bending to the horizontal plane of the point at one side and at the opposite side inclining downward to the said horizontal plane, and at the rear end having a recess to receive the standard and a moldboard secured at the inclined side of the share and at its upper part curving laterally forward beyond the limit of lateral extension of the share, substantially as set forth.

In testimony that I claim the foregoing I have hereunto set my hand this 23d day of September, 1896.

BERN JASSEN.

Witnesses:
CHARLES H. PELL,
C. B. PITNEY.