Oct. 23, 1962 F. KOEHLER 3,060,287

CLOCK-RADIO SWITCH

Filed Sept. 16, 1958 8 Sheets-Sheet 1

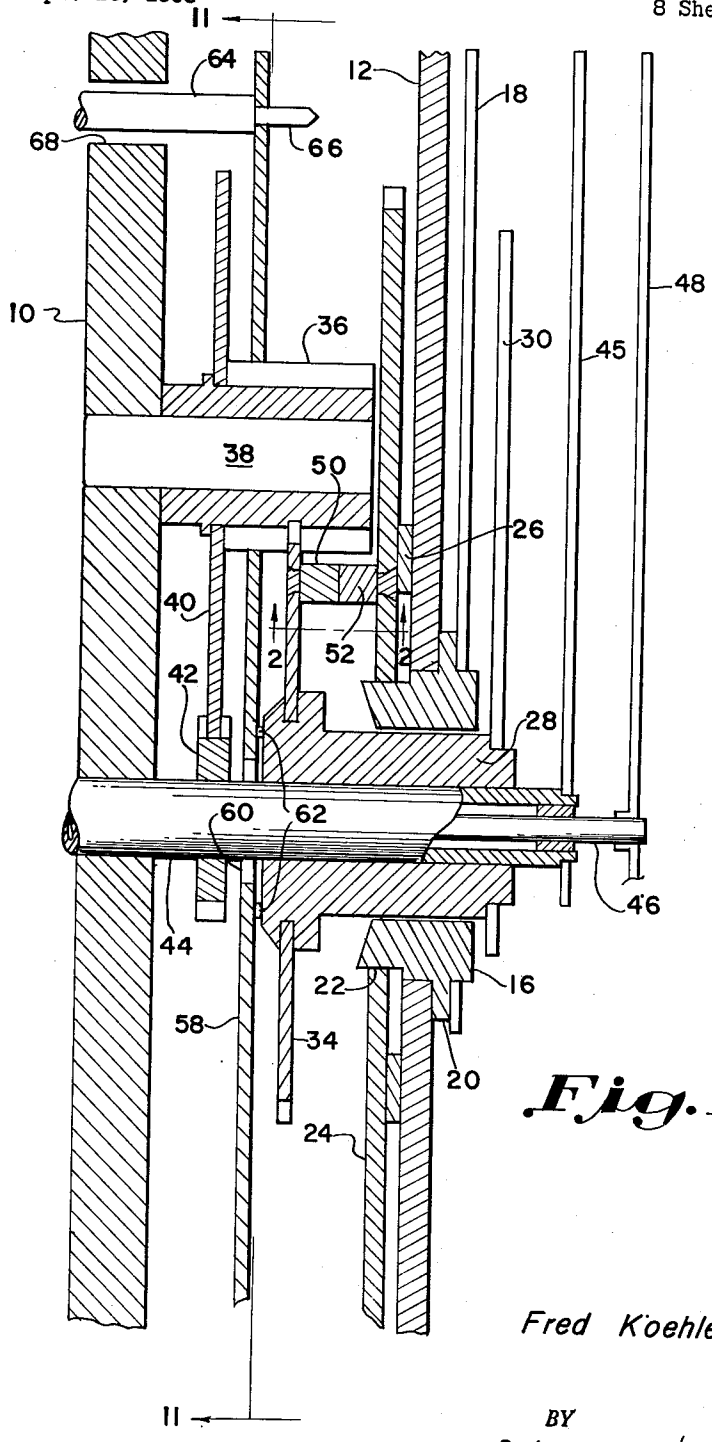

Fig. 1.

Fred Koehler
INVENTOR.

BY
Diggins & LeBlanc
Attorneys.

Oct. 23, 1962 F. KOEHLER 3,060,287

CLOCK-RADIO SWITCH

Filed Sept. 16, 1958 8 Sheets-Sheet 2

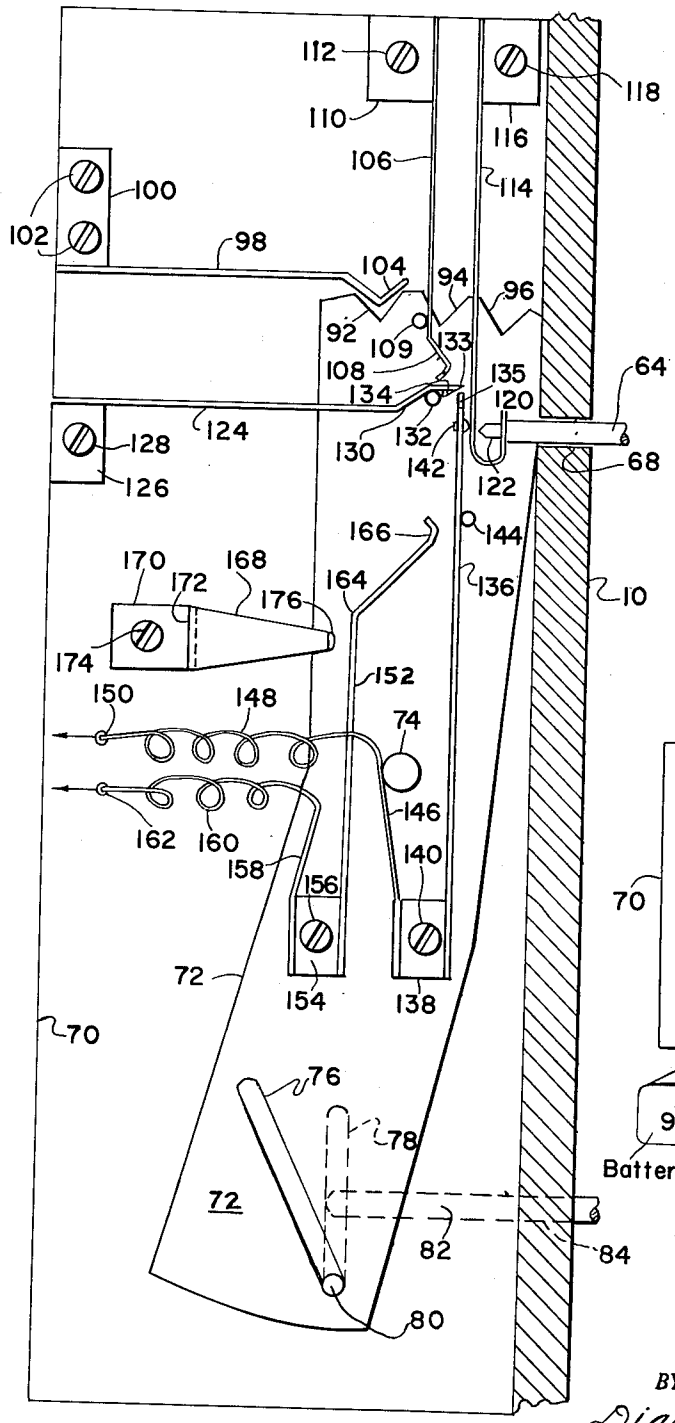

Fig. 3.

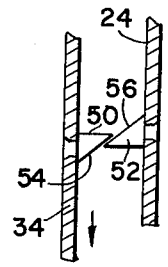

Fig. 2.

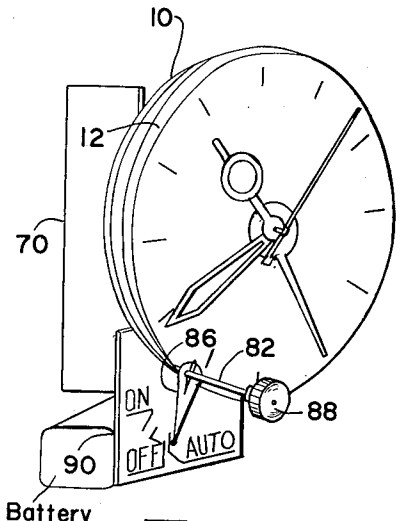

Fig. 4.

Fred Koehler
INVENTOR.

BY
Diggins & Le Blanc
Attorneys.

Oct. 23, 1962 F. KOEHLER 3,060,287

CLOCK-RADIO SWITCH

Filed Sept. 16, 1958 8 Sheets-Sheet 3

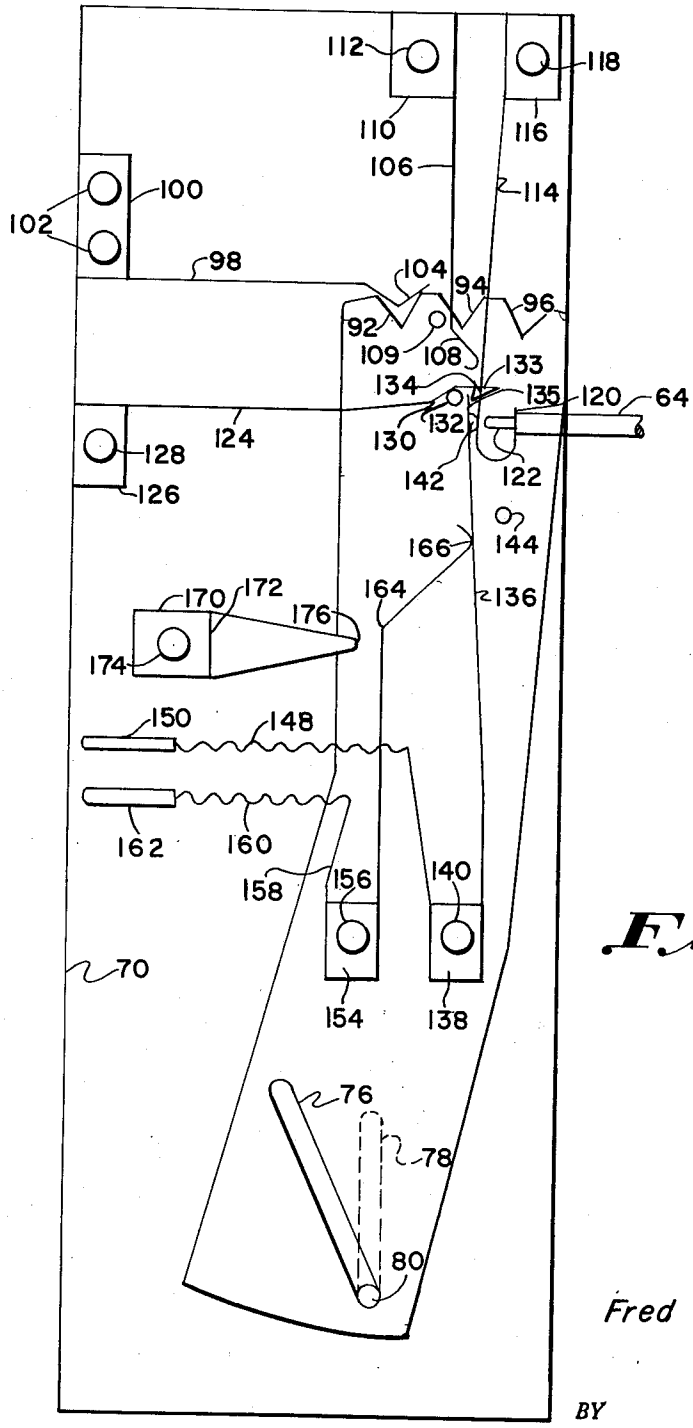

Fig. 5.

Fred Koehler
INVENTOR.

BY

Diggins & LeBlanc
Attorneys

Oct. 23, 1962 F. KOEHLER 3,060,287

CLOCK-RADIO SWITCH

Filed Sept. 16, 1958 8 Sheets-Sheet 4

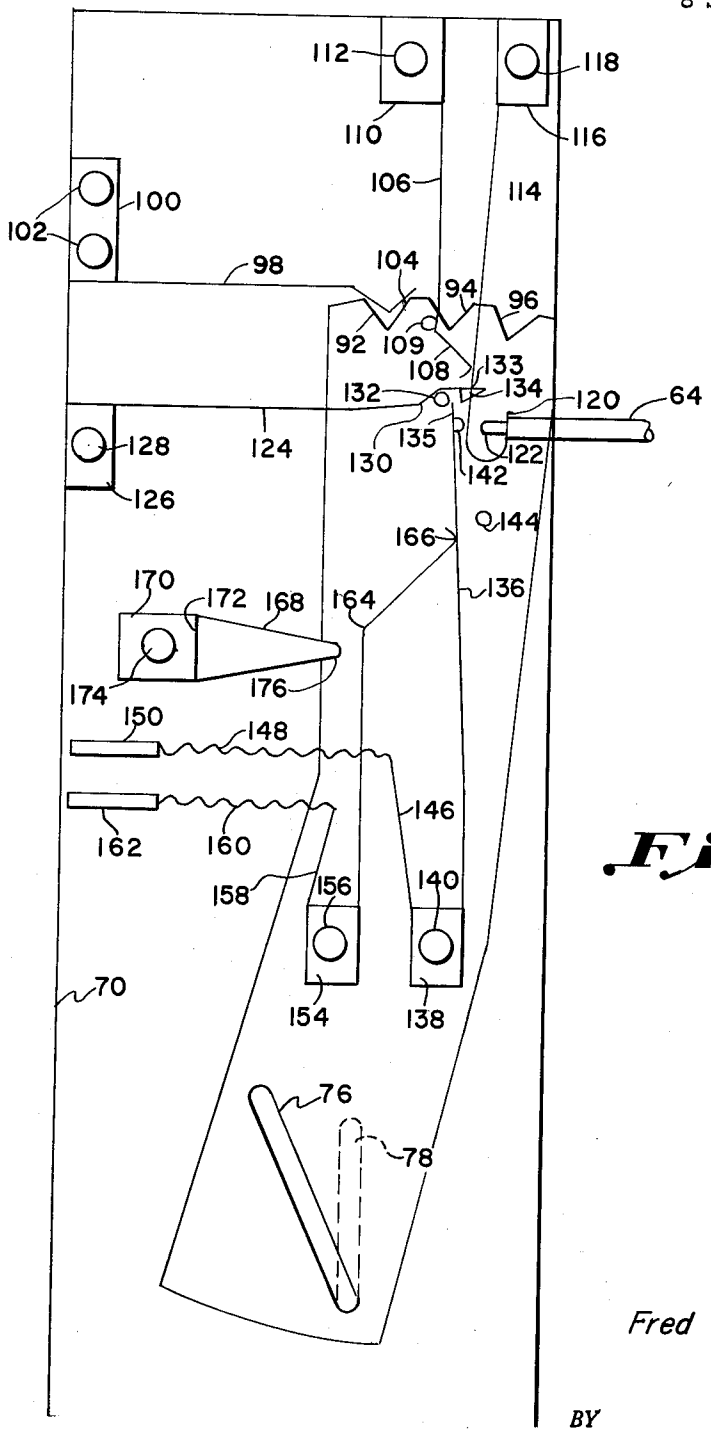

Fig. 6.

Fred Koehler
INVENTOR.

BY
Diggins & LeBlanc
Attorneys.

Oct. 23, 1962 F. KOEHLER 3,060,287

CLOCK-RADIO SWITCH

Filed Sept. 16, 1958 8 Sheets-Sheet 5

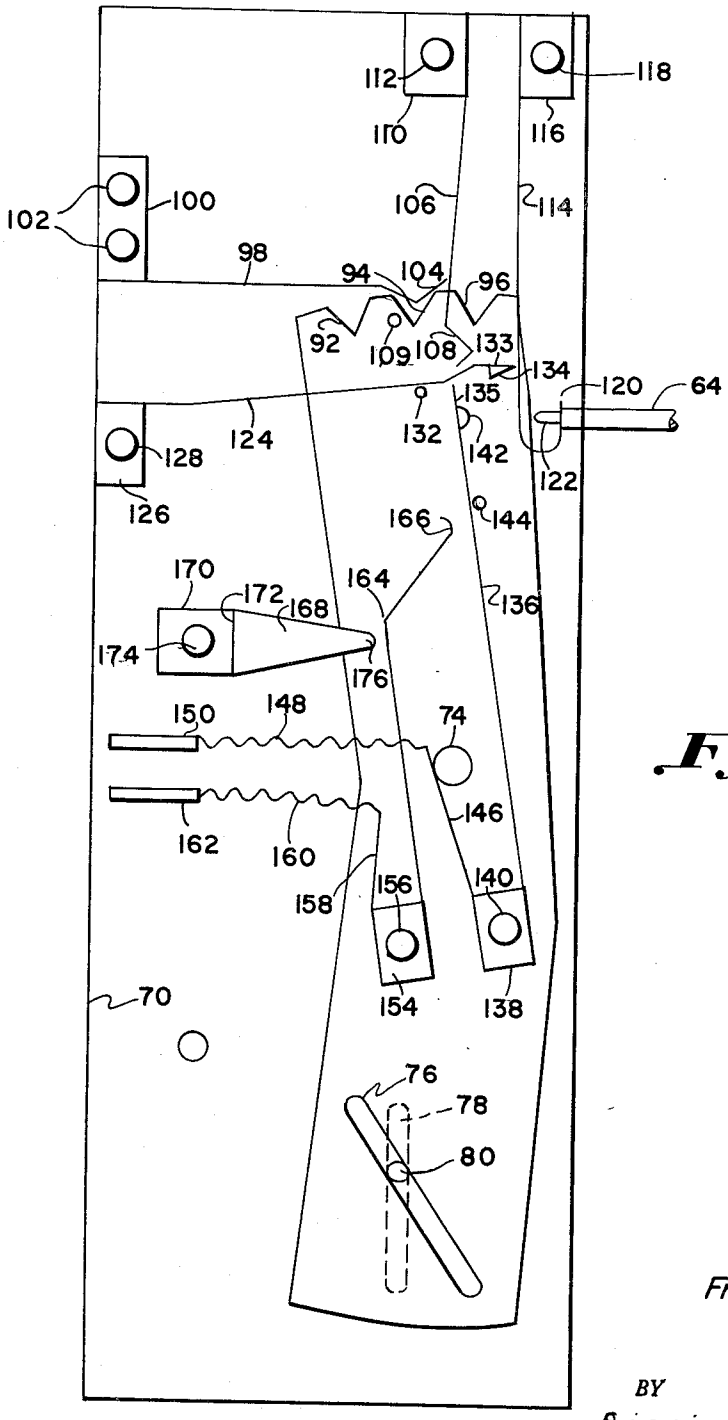

Fig. 7.

Fred Koehler
INVENTOR.

BY
Diggins & LeBlanc
attorneys.

Oct. 23, 1962 F. KOEHLER 3,060,287

CLOCK-RADIO SWITCH

Filed Sept. 16, 1958 8 Sheets-Sheet 6

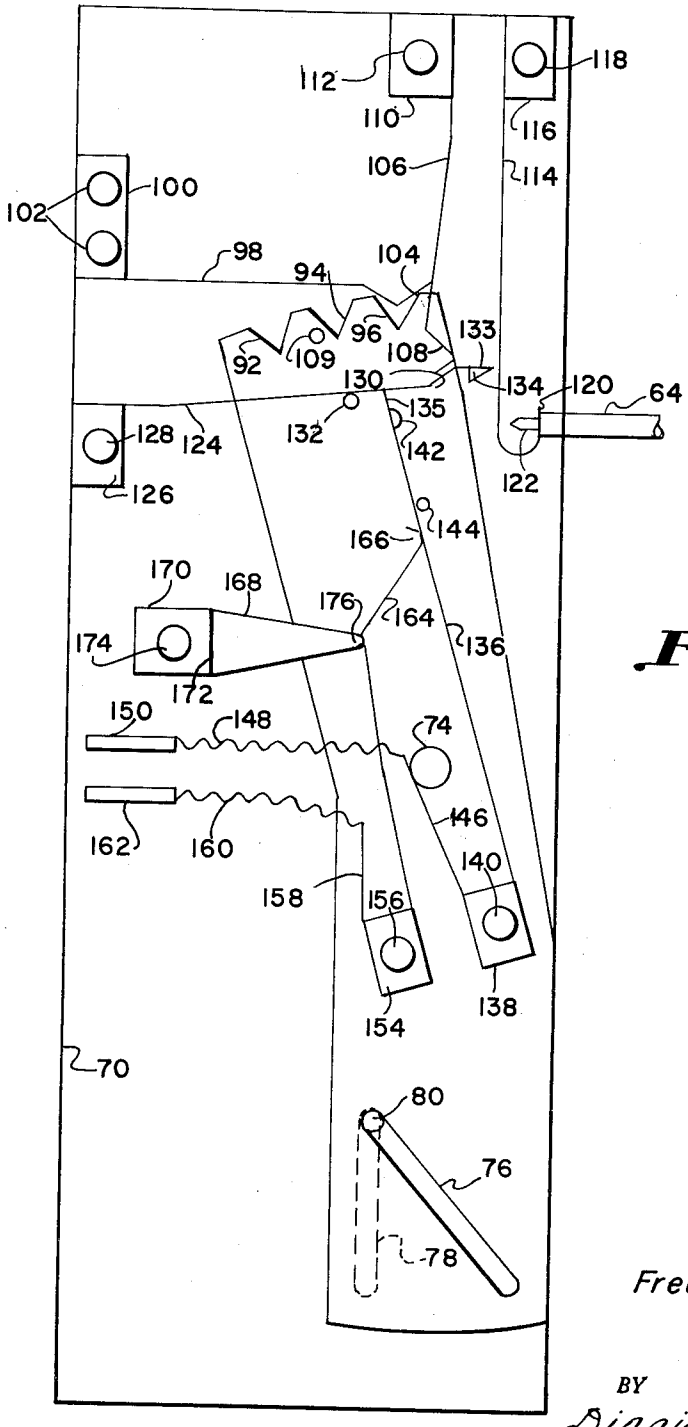

Fig. 3.

Fred Koehler
INVENTOR.

BY
Diggins & Le Blanc
Attorneys.

Oct. 23, 1962 F. KOEHLER 3,060,287

CLOCK-RADIO SWITCH

Filed Sept. 16, 1958 8 Sheets-Sheet 7

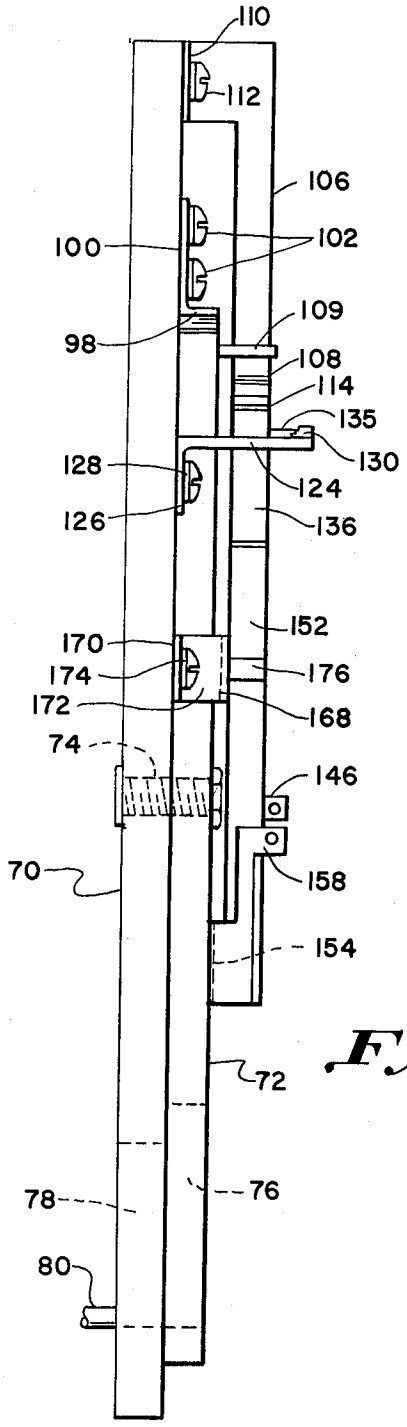

Fig. 10.

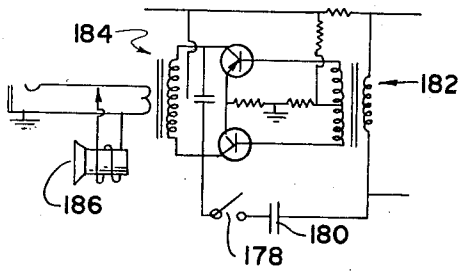

Fig. 9.

Fred Koehler
INVENTOR.

BY
Diggins & Le Blanc
Attorneys.

Oct. 23, 1962 F. KOEHLER 3,060,287

CLOCK-RADIO SWITCH

Filed Sept. 16, 1958 8 Sheets-Sheet 8

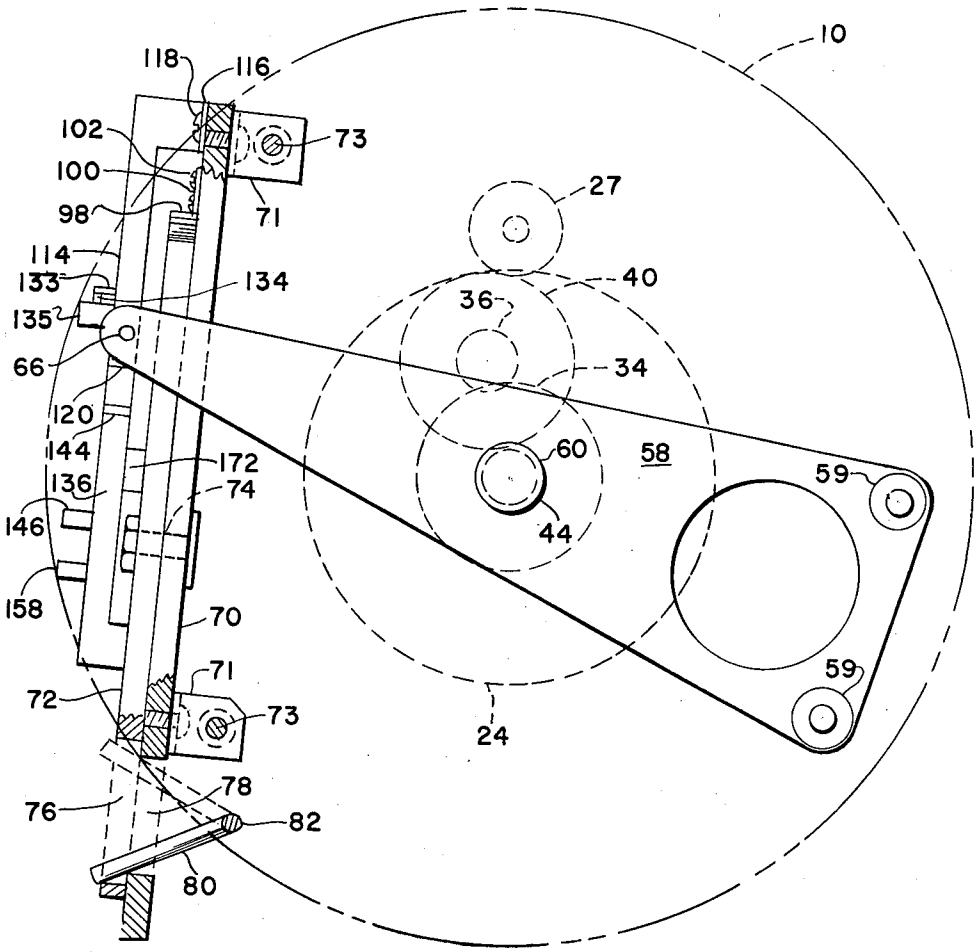

Fig. 11.

Fred Koehler
INVENTOR.

BY
Diggins & LeBlanc
attorneys.

United States Patent Office

3,060,287
Patented Oct. 23, 1962

3,060,287
CLOCK-RADIO SWITCH

Fred Koehler, Lancaster, Pa., assignor to Hamilton Watch Company, Lancaster, Pa., a corporation of Pennsylvania

Filed Sept. 16, 1958, Ser. No. 761,343
7 Claims. (Cl. 200—38)

This invention relates to a combination clock-radio and more particularly relates to a combination clock-radio wherein the radio is of the transistor type and the clock is capable of controlling the radio.

Clock-radios for operation from power supply mains have been commercially available for a considerable period of time. Generally speaking, these units comprise a combination of a five or six tube radio receiver with an A.C. operated synchronous electric clock which keeps time and which is also arranged to switch the radio on to permit it to function as an alarm. Since the clock is connected to the power main there is no limitation upon the electric or mechanical power available and no particular problems are presented in performing the switching function. In addition to the foregoing type of radio, at least one manufacture has marketed a so-called "portable" radio adapted to be attached to a clock for operation from the normal power main and also adapted to be detached from the clock for use as a portable radio.

The portable radios (without clocks) which have been heretofore available commercially are generally classified in two groups: (1) the older type which is a batter operated reduced size version of the regular power main operated radios, and (2) the more recent extremely miniaturized transistor radios. The older and larger portable radios contained fairly heavy duty batteries which possessed a very considerable electro-chemical capacity. The newer transistor radios, on the other hand, are generally operated from much smaller batteries whose electro-chemical power is definitely limited.

The present invention relates to the miniaturized transistor-type radio which, according to the invention, is integrated with and controlled by a battery operated electric clock of the type shown in Koehler Patent No. 2,662,366. A clock of this type operates with a relatively low battery drain and is susceptible of manufacture in quite small sizes. Because of the limited battery power available, however, it is not possible to utilize the same type of switching arrangement as has been heretofore popularized in the older clock-radios. It is therefore an important feature of the invention to provide a unique switching arrangement which permits the battery operated clock to control the operation of the radio so as to provide alarm action without detracting from the time-keeping characteristics of the clock and without materially adding to the drain imposed on the battery.

It is accordingly a primary object of the present invention to provide a battery operated clock controlled transistor radio.

It is another object of the present invention to provide a battery operated clock controlled transistor radio which may be produced in a miniaturized form and which may operate from relatively small batteries.

It is another object of the invention to provide a battery operated clock controlled transistor radio containing a time indicating clock which also operates to energize the radio so as to permit it to perform an alarm function.

It is another object of the invention to provide a batter operated clock controlled transistor radio containing a time indicating clock which energizes the radio and also temporarily energizes a secondary alarm which is integrated into the radio.

It is still a further object of the present invention to provide a battery operated clock actuated switch capable of controlling the energization of a radio.

It is another object of the present invention to provide a battery clock operated switch capable of performing a control function.

These and further objects and advantages of the invention will become more apparent upon reference to the following specification and claims and appended drawings wherein:

FIGURE 1 is a partial vertical section of a battery operated electric clock showing the switch controlling arrangement;

FIGURE 2 is a detail horizontal section showing the switch control actuating studs and taken along the lines 2—2 of the FIGURE 1;

FIGURE 3 is a vertical elevation, partly in section, showing the control switch of the present invention;

FIGURE 4 is a perspective view of the combined clock and switch showing the disposition of the switch with respect to the clock and showing the control knob;

FIGURE 5 is a vertical elevation of the switch of FIGURE 3 showing the switch in a position wherein the radio switch is closed, the alarm switch is open and the selector knob is turned to automatic;

FIGURE 6 is a vertical elevation of the switch of FIGURE 3 showing the radio switch closed, the alarm switch closed, and the selector rotated to the automatic position;

FIGURE 7 is a vertical elevation of the switch of FIGURE 3 showing the radio switch open, the alarm switch open and the selector knob rotated to the "off" position;

FIGURE 8 is a vertical elevation of the switch shown in FIGURE 3 showing the radio switch closed, the alarm switch open and the selector knob turned to the "on" position;

FIGURE 9 is a circuit diagram showing the connection in the final stage of the transistor radio which produces an alarm tone;

FIGURE 10 is a side elevation of the switch of FIGURES 3, 5 and 6–8; and

FIGURE 11 is a partial elevation taken along the lines 11—11 of FIGURE 1 showing the pillar plate and train in phantom.

The battery operated clock utilized in the apparatus of this invention is of the type shown in Koehler Patent No. 2,662,366 and thus the details of the clock are discussed herein only to the extent necessary to a complete understanding of the operation of the switch and the performance of the control function. Referring to FIGURE 1, the dial train of of Koehler type clock is shown consisting of a pillar plate 10 and dial plate 12. Received within an opening 14 in the dial plate 12 is a setting hand hub 16 which carries a setting hand 18. The hub 16 has a peripheral outer flange 20 which bears against the outer face of the dial plate 12 and also has a reduced diameter portion 22 at its other end. An alarm setting wheel 24 is mounted on the reduced diameter portion 22 and engages an annular bearing member 26 on the back of the dial plate 12. The setting wheel 24 may be engageable by a setting pinion 27 (FIGURE 11) of a conventional type such as, for instance, that shown in assignee's copending application of Kaj H. Jensen, Serial No. 748,953, filed July 16, 1958, now Patent Number 2,990,676, issued July 4, 1961.

An hour wheel hub 28 carrying an hour wheel 34 is mounted within the setting hand hub 16 and carries an hour hand 30. The hour wheel 34 is mounted on the hour wheel hub 28 and engages the minute pinion 36. The minute pinion is mounted on a staff 38 and carries the minute wheel 40 which is driven by the fourth

pinion 42 on the center wheel sleeve 44. The center wheel sleeve 44 carries the minute hand 45 and also supports the outer end of the center staff 46 carrying the second hand 48.

Referring to both FIGURES 1 and 2, the hour wheel 34 has pinned thereto an actuating stud 50 having a triangular side elevation as seen in FIGURE 2. A conjugately shaped actuating stud 52 is pinned to the alarm setting wheel 24. The height of the two studs 50 and 52 and the spacing of the alarm setting wheel and hour wheel is such that the inclined surfaces 54 and 56 of the studs engage one another when the rotation of the hour wheel brings the stud 50 to the stud 52. Referring to FIGURE 2, the stud 50 on the hour wheel 34 moves downwardly in the direction of the arrow. When the sloping surface 54 of this stud engages the conjugate sloping surface 56 of the stud 52, there is a tendency to force the hour wheel to the left.

This tendency to move the hour wheel is resiliently resisted by an elongated alarm release spring 58 (FIGURES 1 and 11) which is fastened to the pillar plate 10 at its lower end by pins 59 (as seen in FIGURE 11). The spring is apertured at 60 to pass the center wheel sleeve 44 and is provided with nibs 62 which bear against the end of the hour wheel hub 28. Mounted in the upper end of the alarm release spring 58 is a switch actuating pin 64 which may be friction fitted to the alarm release spring at 66.

The actuating pin 64 extends through an opening 68 in the pillar plate 10 for a purpose presently to be described. As is well understood by those skilled in the art, the alarm setting wheel 24 and its associated hand 18 may be rotated by a suitable setting knob so as to bring the stud 52 to the desired hour position. As the hour wheel 34 then rotates, the stud 50 thereon will eventually reach this position, the studs 50 and 52 will engage one another, and the hour wheel 34 will be moved to the left in FIGURES 1 and 2 against the resilient urging of alarm release spring 58, so as to cause spring 58 to also move to the left in FIGURE 1. This movement of alarm release spring 58 moves actuating pin 64 to the left in FIGURE 1 to control the switch as will now be described.

Referring to FIGURES 3 and 10, an insulating plate 70 is fastened to the back of the pillar plate 10 by any suitable means, such as brackets and screws, 71 and 73 seen in FIGURE 11. A switch actuator plate 72 also formed of insulating material is pivoted to the plate 70 on an arbor 74 and carries a diagonal slot 76 in its lower end. A vertical slot 78 is provided in the plate 70 and a bent over end 80 of a control rod 82 extends through both slots. The control rod 82 passes through a suitable aperture 84 in the pillar plate 10 and also passes through the dial plate 12. Referring to FIGURE 4, the control rod 82 carries an indicating pointer 86 and is actuated by means of a knurled knob 88. A suitable indicia template 90 is fastened to the dial plate and carries the markings "On", "Off" and "Auto".

Rotation of the control rod 82 by means of the control knob 88 moves the end of the bent arm 80 vertically in FIGURES 3 and 10 and, as the end of the bent portion 80 moves upwardly, the switch actuator plate 72 is caused to rotate about the arbor 74 in a counter-clockwise direction. This plate is indexed to the three positions marked on the indicia plate 90 by means of three notches 92, 94 and 96 in the upper end of the plate. An index spring finger 98 is fastened to the plate 70 by means of a foot 100 and screws 102 and has a suitably V-shaped end 104 which engages any one of the three notches 92, 94 and 96 to accurately lock the switch actuator plate 72 into any one of the three positions.

Mounted on the stationary plate 70 is a first alarm switch contact arm 106 having a V-shaped end 108. The contact arm 106 extends over the switch actuator plate 72, as is best seen in FIGURE 10, and is secured to the stationary plate 70 by a foot 110 and screw 112. The end of the first alarm contact arm 106 adjacent the V-shaped portion 108 resiliently engages a pin 109 carried by the switch actuator plate 72. The resilience of arm 106 is such that its end 108 tends to move to the left in FIGURE 3. Immediately to the right of the alarm contact arm 106 is a second alarm contact arm 114 supported by a foot 116 and secured to the stationary plate 70 by a screw 118. The end of contact arm 114 also extends over switch actuator plate 72 and the end thereof is reversely curved at 120. The end of the reverse curved portion 120 is secured to a reduced diameter portion 122 of the actuator pin 64.

An elongated latching arm 124 is secured to the stationary plate 70 by means of a foot 126 and screw 128 and extends over the switch actuator plate 72 as may be seen in FIGURE 10. The end of the contact arm 124 is off-set upwardly at 130 in FIGURE 3 and this off-set portion engages a pin 132 carried by the switch actuator plate 72. The end 133 of this contact arm is biased downwardly in FIGURE 3 and carries a triangular shaped cam member 134 which engages the end 135 of a first elongated radio contact arm 136 carried by the switch actuator plate 72.

The first radio contact arm 136 is fastened to the switch actuator plate 72 by a foot 138 and screw 140 and carries adjacent its end an insulating button 142. Intermediate the insulating button 142 and foot 138 the first radio contact arm 136 engages a pin 144 in the switch actuator plate 72. The radio contact arm 136 is biased to the right in FIGURE 3 against pin 144 and the insulating button 142 engages the end of the second alarm contact arm 114.

The latching arm 124 is at a height sufficient to allow it to pass over the second alarm contact arm 114 as may be seen in FIGURE 10. The end 135 of contact arm 136 extends upwardly so that the engagement between the triangular cam 134 and end 135 occurs above the level of contact arms 106, 114 and 136. The end of contact arm 124 is broken away in FIGURE 10 to show the upstanding portion 135 of contact arm 136.

The foot 138 which supports first radio contact arm 136 also carries a terminal arm 146 connected to a pig-tail lead 148 which passes through an opening 150 in the stationary plate 70 to which it is secured. The switch actuator plate 72 also carries a second radio contact arm 152 which is mounted on a foot 154 and secured to the plate by a screw 156. The foot 154 also carries a terminal arm 158 connected to pig-tail 160 which passes through a hole 162 in the stationary plate 70 to which the pig-tail is secured. The pig-tail leads 148 and 160 are connected in the power circuit of the radio in the same position as a regular "on"-"off" switch. Thus, when contacts 136 and 152 are engaged, the power circuit of the radio is closed thereby energizing the radio.

The outer end of second radio contact arm 152 is bent to the right at 164 in FIGURE 3 so that a rounded end 166 of the arm approaches the first radio contact arm 136. A camming arm 168 is mounted by means of a foot 170, vertical portion 172 and screw 174 on the stationary plate 70. The outer end of the camming arm 168 is bent upwardly adjacent the second radio contact arm 152 to form an upstanding cam post 176.

The alarm switch contact arm 106 and 114 form a switch shown diagrammatically at 178 in FIGURE 9. This figure shows the final power output stage of the transistor radio. A feed-back circuit having an alarm switch 178, connects a feed-back capacitor 180 between the input circuit 182 and the output circuit 184 of the final amplifying stage. When the radio is energized by closure of the power circuit and the switch 178 is subsequently closed, the final amplifier stage is caused to oscillate thereby producing a tone in the radio speaker

186 and this tone serves as an alarm. The circuitry of the radio other than the feed-back circuit connection is completely conventional and thus is not shown.

Turning now to FIGURES 5, 6, 7 and 8, the operation of the unit will be described. Referring to FIGURE 7, the control rod 82 is in its middle or "off" position and the switch actuator plate 72 is locked in this position by the end 104 of index finger 98 which engages the middle notch 94. Under these circumstances there is no connection established between radio contact arms 136 and 152 or the pig-tail leads 148 and 160, nor is there any connection established between the contact arms 106 and 114 of the alarm switch 178. Both the radio and the alarm are thus off. As the hour wheel 34 rotates past the position where the studs 50 and 52 engage to move the control pin 64 to the left in FIGURE 7, this condition of the switch remains unchanged. That is to say, the leftward movement of control pin 64 and connected alarm contact arm 114 does not bring that arm into engagement with any other contact arm. It will be appreciated that after the studs 50 and 52 clear one another, the pin 64 is returned to the right to its original position by means of the alarm release spring 58.

If it is now desired to turn the radio on, the control rod 82 is rotated to the "on" position and its bent end "80" cams the switch actuator plate 72 to its most counterclockwise position as is shown in FIGURE 8. In this position the end 104 of index arm 98 locks in the notch 96. This movement of the switch actuator plate 72 about its arbor 74 brings the second radio contact arm 152 into engagement with the cam post 176 of camming arm 168 and forces the end 166 of the second radio contact arm 152 into engagement with the first radio contact arm 136. Rightward movement of the latter contact arm is prevented by post 144. The engagement of the radio contact arms 136 and 152 establishes a connection between the pig-tail leads 148 and 160 and thereby energizes the radio. The radio will remain energized so long as the control knob remains in this position. Engagement of the studs 50 and 52 and the corresponding movement of the control pin 64 produces no change in this condition.

Referring now to FIGURE 3, rotation of the control rod 82 to the "auto" position, places the switch actuator plate 72 in its most clockwise disposition. The end 104 of index finger 98 locks in slot 92 and pin 109 engages the first alarm contact arm 106 to move this arm to the right from the position which it occupied in FIGURES 7 and 8. That is to say, in FIGURES 7 and 8 the end 108 of the first alarm contact arm 106 was sufficiently to the left that the movement of the control pin 64 failed to cause engagement between the end 108 of first alarm contact arm 106 and second alarm contact arm 114. In the position of the switch actuator plate 72 shown in FIGURE 3, the insulating button 142 in the end of the first radio contact arm 136 engages the end of the second alarm contact arm 114. With the switch in the condition shown in FIGURE 3, there is no connection established between radio contact arms 136 and 152 or between alarm contact arms 106 and 114, so that both the radio and the alarm are off.

Referring now to FIGURES 1 and 5, as the sloping surfaces 54 and 56 of the studs 50 and 52 engage, the hour wheel 34 and control pin 64 are gradually moved to the left in FIGURES 1 and 5. After this movement has progressed a small amount, the end 122 of control pin 64 forces the second alarm contact arm 114 to the left thereby moving the end 135 of the first radio contact arm 136 to the left. After this movement has progressed a certain amount, the end 135 of the first radio contact arm 136 latches behind the triangular cam or detent 134 on latching arm 124. In the meantime the intermediate portion of the first radio contact arm 136 is forced into engagement with the end 166 of the second radio contact arm 152 thereby establishing connections between the pig-tail leads 148 and 160 and energizing the radio. At this time it is to be noted that there is no connection established between alarm contact arms 106 and 114.

As the studs 50 and 52 continue to move, however, and the hour wheel 34 and control pin 64 are forced still further to the left, contact is established between alarm contact arms 106 and 114 as shown in FIGURE 6, thereby establishing the feedback connection in the final stage of the already energized radio to sound the alarm tone. The alarm tone sounds until the studs 50 and 52 disengage and the hour wheel 34 and control pin 64 are returned to their rightmost positions by the alarm release spring 58. The radio remains energized, however, since the end 135 of the first radio contact arm 136 is hooked under the detent 134. The radio may be deenergized by returning the control shaft 82 to the "off" position, thereby rotating the switch actuator plate 72 in a counterclockwise direction, so that pin 132 forces latching arm 124 upwardly to disengage detent 134 from the end 135 of the first radio contact arm 136. Arm 136 springs to the right to the position shown in FIGURE 7, thereby disestablishing connection between radio contact arms 136 and 152 to deenergize the radio. The time which elapses between the energization of the radio with the control rod in the "auto" position and the energization of the alarm is dependent upon the shape and size of the studs 50 and 52, and can be varied to suit popular taste. The amount of time that the alarm remains on is similarly dependent upon the shape and size of these studs and can also be varied in a similar manner.

The "on" and "off" positions constitute the manual controls for the radio. The "auto" position places the clock in control of the energization of the radio and both the energization and deenergization of the alarm. In one specific arrangement the sequence of operation is as follows: Ten minutes before the selected alarm time the radio starts playing. At the selected alarm time the radio emits an intermitten oscillating tone which stops after five minutes and the radio continues to play. The alarm goes into action regardless of whether a radio signal is on the air or not.

It will be apparent from the foregoing that the unit of this invention provides a combination clock-radio which continuously provides an accurate indication of time and wherein the radio may be manually switched on and off at will. In addition, the clock and radio are integrated in such a manner that the clock can be utilized to turn the radio on at any desired time in the following twelve hours. Once turned on in this manner, the radio remains on until it is manually turned off. As a further feature of the invention, enhancing the value of the unit as an alarm device, an alarm tone is produced within a few minutes after the radio is automatically turned on. This tone continues for a short period of time and then automatically stops, although the radio continues to remain energized. This invention provides all of the advantages of the power main operated type of clock radio in an extremely small transistor radio which is completely portable and susceptible of carriage in luggage, a briefcase or even one's pocket. The clock performs its control functions without materially increasing the drain on the normal filament batteries provided in the radio so that the life of these batteries is not deleteriously affected.

The invention may be embodied in other specific forms without departing from the spirit or essential characteristics thereof. The present embodiment is therefore to be considered in all respects as illustrative and not restrictive, the scope of the invention being indicated by the appended claims rather than by the foregoing description, and all changes which come within the meaning and range of equivalency of the claims are therefore intended to be embraced therein.

What is claimed and desired to be secured by United States Letters Patent is:

1. In a horologically controlled switch, a stationary

plate member, a movable plate member pivoted to said stationary plate member, a first pair of elongated contact arms mounted on said stationary plate member and extending over said movable plate member, a second pair of elongated contact arms mounted on said movable plate member and extending thereover, cam means to move said movable plate into a first position wherein said second pair of elongated contact arms make contact with one another while said first pair of contact arms remain unengaged, and into a second position in which both pairs of contact arms remain unengaged, and a movable control member effective when said movable plate member is in said second position to move first said second and then said first pairs of contact arms into engagement with one another.

2. A horologically controlled switch as set out in claim 1 wherein said movable control member is attached to one of said arms of said first pair.

3. A horologically controlled switch as set out in claim 1 wherein said cam means is mounted on said stationary plate member and is engageable with one of said arms of said second pair of arms when said movable plate member is moved to said first position to force said contact arm into engagement with the other arm in said second pair of arms.

4. A horologically controlled switch as set out in claim 1 wherein the arms in said pairs are generally parallel to one another and the end of one arm in said second pair of arms engages the end of one arm in said first pair of arms, and a latching arm mounted on said stationary plate member and extending into proximity to the ends of said engaged arms and engageable with the end of said one arm in said second pair of arms when said one arm is moved past the end of said latching arm.

5. A horologically controlled switch as set out in claim 4 including a pin on said movable plate member in engagement with said latching arm, said latching arm being so shaped that movement of said movable plate member out of said second position disengages said latching arm from said end of said one arm in said second pair of arms.

6. A horologically controlled switch comprising a stationary plate member, a movable plate member pivoted to said stationary plate member, a first pair of generally parallel resilient elongated contact arms mounted on said stationary plate member and having ends extending over said movable plate member, a second pair of generally parallel resilient elongated contact arms mounted on said movable plate member and extending thereover, said movable plate member being movable into three positions, a first pin on said movable plate member engaging one of said first pair of arms when said movable plate member is in a first position, the end of the other arm in said first pair of arms engaging the end of one arm in said second pair of arms, movable control means engaging the end of said other arm in said first pair of arms for moving said end, cam means mounted on said stationary plate member and engageable with the other arm in said second pair of arms when said movable plate member is moved to a third position, and a second pin on said movable plate member engaging said one arm in said second pair of arms for moving said arm out of engagement with said other arm in said first pair of arms when said movable plate member is in a second position.

7. A horologically controlled switch as set out in claim 6 including a latching arm mounted on said stationary plate member and having an end extending over said movable plate member, said end of said latching member being engageable with the end of said first arm in said second pair of arms when said movable plate member is in said first position.

References Cited in the file of this patent

UNITED STATES PATENTS

2,026,070	Sholden	Dec. 31, 1935
2,455,161	Buttner	Nov. 30, 1948
2,542,947	Rowe	Feb. 20, 1951
2,738,447	Sandberg	Mar. 13, 1956
2,768,332	Protzmann et al.	Oct. 23, 1956
2,782,274	Powers et al.	Feb. 19, 1957
2,816,969	Gallagher et al.	Dec. 17, 1957
2,921,150	Wotring	Jan. 12, 1960