May 7, 1963 R. E. MEYER 3,088,545

TOWER HOIST

Filed July 24, 1961 3 Sheets-Sheet 1

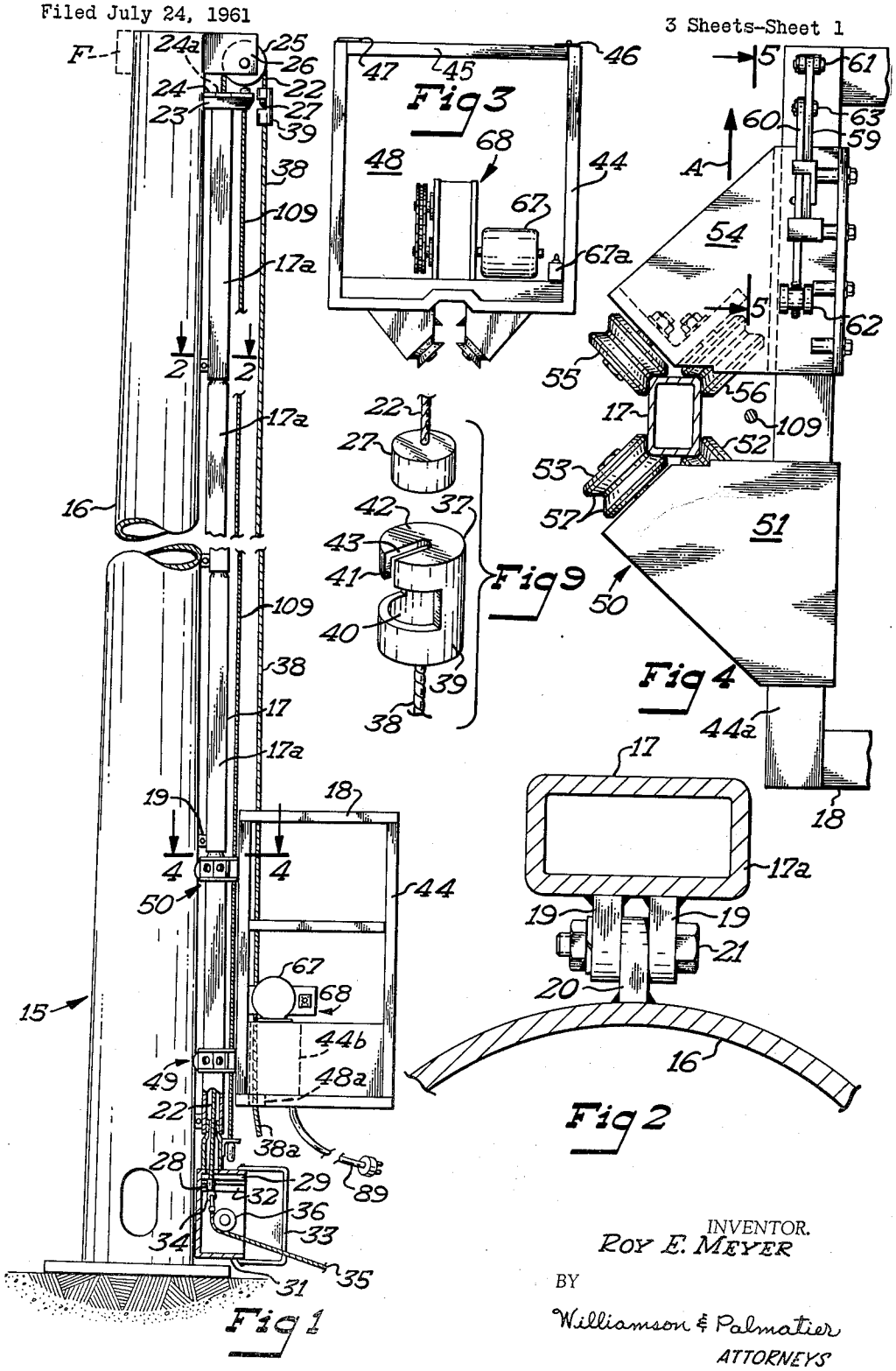

INVENTOR.
ROY E. MEYER

BY

Williamson & Palmatier
ATTORNEYS

May 7, 1963 R. E. MEYER 3,088,545

TOWER HOIST

Filed July 24, 1961 3 Sheets-Sheet 2

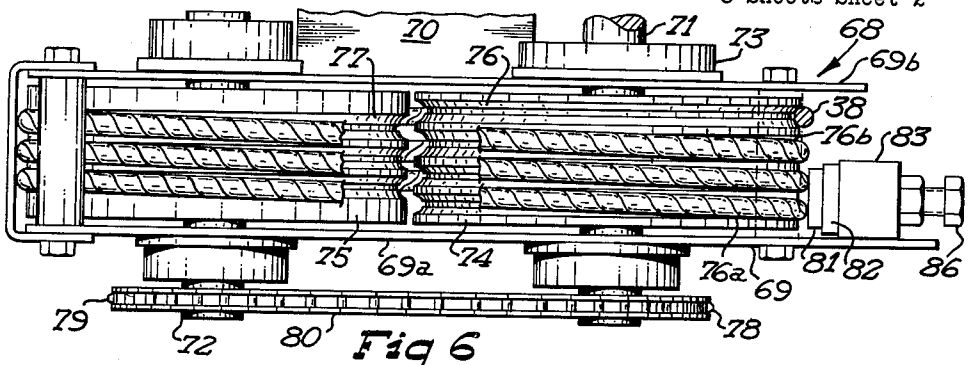

Fig 6

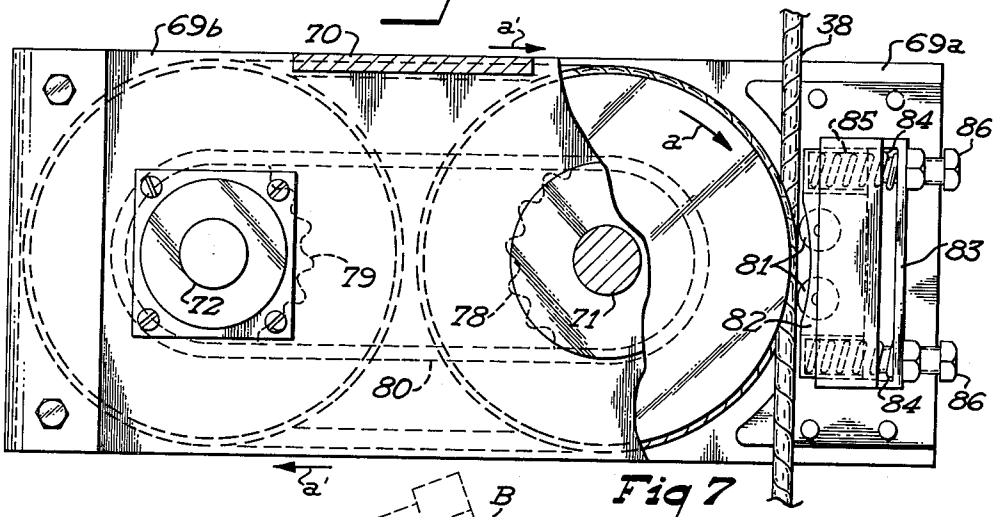

Fig 7

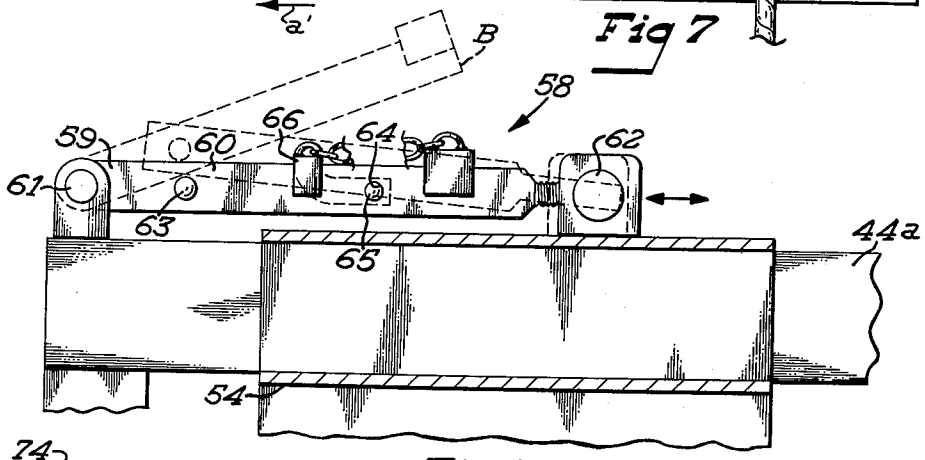

Fig 5

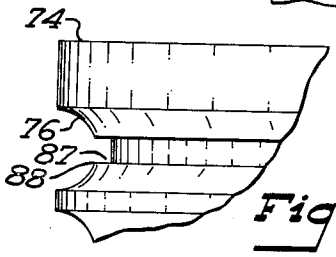

Fig 8

INVENTOR.
ROY E. MEYER

BY
Williamson & Palmatier
ATTORNEYS

May 7, 1963 R. E. MEYER 3,088,545

TOWER HOIST

Filed July 24, 1961 3 Sheets-Sheet 3

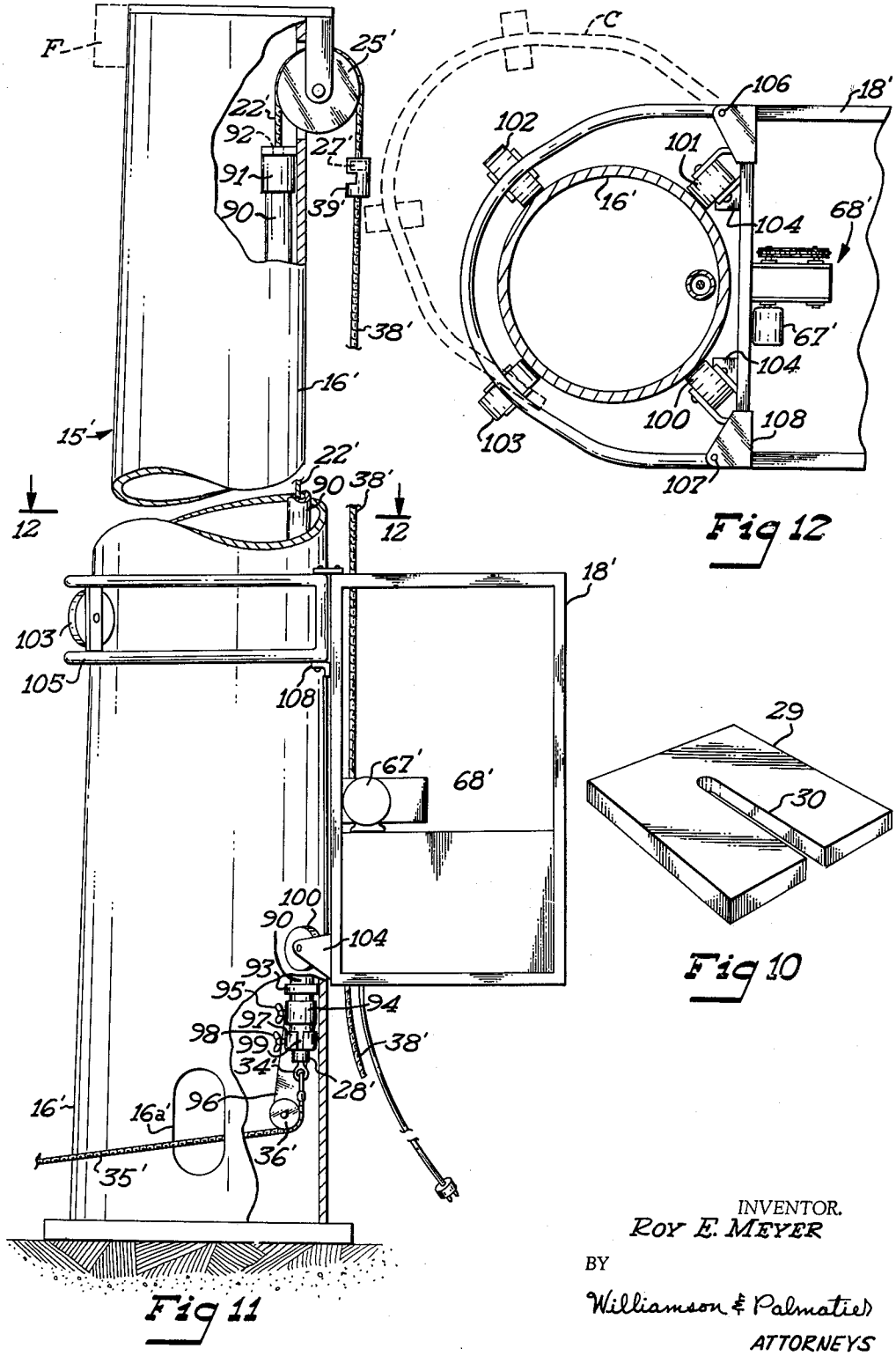

Fig 12

Fig 10

Fig 11

INVENTOR.
ROY E. MEYER

BY

Williamson & Palmatier
ATTORNEYS

United States Patent Office

3,088,545

Patented May 7, 1963

1

3,088,545

TOWER HOIST

Roy E. Meyer, Red Wing, Minn.

Filed July 24, 1961, Ser. No. 126,235
8 Claims. (Cl. 187—6)

This invention relates to apparatus for carrying a workman up and down a permanent type of tower such as floodlight supports and the like.

Although there have been mechanisms known in the past for carrying personnel up and down high structures, all of the known apparatus and mechanisms have distinct disadvantages, particularly when considered for use with extremely high columns or columnar type supports. It will be understood that in an apparatus for carrying personnel up a tower, safety of the personnel is always foremost of the considerations involved in adapting a mechanism for this usage. Furthermore, it will be understood that personnel carrying mechanisms are almost essential to proper safety in order to facilitate working by such personnel at the top of the tower once they arrive. For instance, if a workman were required to manually climb a columnar tower of a height in the range of 50 to 150 feet or more, it is quite likely that the workman would be rather fatigued when he ultimately arrived at the top of the tower. Obviously, the workman would necessarily spend substantially more time in performing his duties at the top of the tower because of his fatigued condition. It may also be concluded that if the workman is quite fatigued upon arrivel at the top of the tower an unsafe situation prevails.

One of the primary disadvantages of personnel carrying mechanisms known in the past is that such mechanisms have not been readily adaptable for immediate installation on to a tower and subsequent removal therefrom for use on other towers. Another distinct disadvantage of previously known apparatus for use in connection with carrying personnel up a tower is that such apparatus has generally employed long cables continuously exposed to the weather and to the effects of constant motion produced by wind, thereby weakening the cable at its ends and more particularly at the points of constant bending due to the motion induced by wind. Of course, such cables present a rather unsightly appearance.

A still further disadvantage of known apparatus for cerrying personnel up a tower is the method of handling the lifting cables. In certain instances, moving cables are provided, which cables must necessarily be trained over sheaves or pulleys at the top of the tower and then extended downwardly along the tower to a power source for winching the cable and causing the lifting function to be performed. Winches which wind cable thereon for liting a personnel-carrying car must necessarily be of substantial size in order to accommodate the size and length of cables necessarily employed for supporting and lifting personnel-carrying cars on a high tower. It would be extremely inconvenient to employ such winches actually in the personnel-carrying car, because a substantial excess weight must be carried, and furthtermore the bulk of such winches necessarily requires that substantial room be provided to accommodate such a winch in a car.

With these comments in mind it is to the elimination of these and other disadvantages to which the present invention is directed, along with the inclusion therein of other novel and desirable features.

An object of my invention is to provide a new and improved apparatus of simple and inexpensive construction and operation for carrying workmen up and down a substantially vertical permanent type of tower.

Another object of my invention is the provision of novel apparatus for hoisting and lowering personnel on a tower and which apparatus is substantially completely removable from the tower to permit successive usage thereof on a number of towers.

2

Still another object of my invention is to provide an improved and novel apparatus attachable to a tower to permit raising and lowering of personnel on the tower and which apparatus, although partially permanently installed on the tower, will not interfere with the normal usage of the tower.

A further object of my invention is to provide in an improved apparatus for carrying personnel up and down a tower of a service car crawling along a stationary support cable without causing the cable to accumulate in the car.

A still further object of my invention is the provision of a new and novel apparatus for carrying workmen up and down a tower and including a service car which is guided on the tower by a track, the operation of which is virtually unaffected by swaying of the tower in wind.

These and other objects and advantages of my invention will more fully appear from the following description made in connection with the accompanying drawings wherein like reference characters refer to similar parts throughout the several views and in which:

FIG. 1 is an elevational general assembly view with a portion broken away to permit enlargement of scale and clarity of detail;

FIG. 2 is an enlarged detail section taken at **2—2** in FIG. 1;

FIG. 3 is a top plan view of the car disassembled from the tower.

FIG. 4 is an enlarged detail section view taken at **4—4** in FIG. 1;

FIG. 5 is an enlarged detail section view taken at **5—5** in FIG. 4;

FIG. 6 is a enlarged detail top plan view of the cable-engaging power unit;

FIG. 7 is a side elevation view, partly broken away of the cable-engaging power unit;

FIG. 8 is a greatly enlarged detail plan view of a portion of one of the cable windings drums;

FIG. 9 is a detail perspective view of the cable coupling in exploded condition;

FIG. 10 is an enlarged detail perspective view of an anchor cable stop;

FIG. 11 is an elevational general assembly view partially broken away to permit enlargement of scale and clarity of detail of a modified form of the invention; and

FIG. 12 is a section view taken at **12—12** in FIG. 11.

The tower is indicated in general by numeral **15** and is of the general type for carrying a framework F at a position elevated above the ground by a distance of sixty to one hundred and twenty feet or more and upon which may be carried banks of floodlights for lighting athletic fields and other equipment which must be disposed at an extremely high elevated position. The tower **15** includes an elongate and substantially rigid tubular supporting structure **16** which is fabricated of steel plates rolled into proper configuration and then welded to produce a true tubular supporting structure. The supporting structure **16** will ordinarily be tapered convergingly from bottom to top so that in extremely high installations, the bottom may be up to six feet or more in diameter and the top of the tubular supporting structure **16** may be as small as eight inches in diameter. Although the rigid tubular supporting structure **16** is constructed of rigid steel having thicknesses varying from as much as one inch in thickness or more and down to approximately three-eighth inch in thickness at the top, winds do produce at least limited swaying of such a high tower structure. In towers such as this, the use of guy wires is infrequent unless extremely high installations are to be made.

The tower **15** also includes a track **17** upon which a personnel-carrying car **18** is guided. The track **17** comprises a plurality of telescopically interconnected tubular track sections **17***a*, having a substantially rectangular cross section as depicted in FIG. 2. Each of the track sections **17** has a pair of apertured mounting ears **19** welded thereon adjacent the lower end of the track section and in spaced relation with each other to receive therebetween one of the plurality of ears **20** welded on the tubular supporting structure **16**. The ears **19** and **20** have aligned apertures to receive a mounting pivot bolt **21** therethrough, thereby mounting and securing each of the track sections **17***a* to the tubular structure **16** at a single location to permit limited swinging or swinging oscillation of the track section with respect to the tower as the tower sways and as the track **17** telescopically extends and retracts.

In addition to mounting and guiding the personnel-carrying car **18**, the tubular track **17** also serves to confine an anchoring cable **22** which is a part of the permanent installation on the tower **15**. The anchoring cable **22** is preferably constructed of stainless steel or some other similar non-corrosive material which will withstand the effects of moisture and other weather conditions without weakening or breaking, either along its central portion or at its ends. The anchoring cable **22** extends upwardly through the upper end of the track **17** and through a track-mounting bracket **23** which is affixed as by welding to the supporting structure **16** and which carries a cover plate **24** which substantially encloses the upper end of the track, but has a suitably provided aperture **24***a* slidably receiving the anchoring cable therethrough. The cable extends upwardly from the cover plate **24** and is trained over a sheave **25** which is journalled in bearings on a rigid mounting bracket **26** affixed as by welding to the top of the rigid tubular structure **16**. The upper end of the anchoring cable **22** has an enlarged weight **27** affixed thereto which also serves as a stop to prevent cable **22** from being pulled off the sheave **25**. The weight **27** is sufficiently large as to offset all of the weight of anchoring cable **22** so that when the lower end of the anchoring cable **22** is released, the anchoring cable will move upwardly through the track **17** and over the sheave **25** and the weight **27** will move downwardly at the exterior of the tower **15**. The lower end of the anchoring cable **22** has a stop element **28** thereon of such size as to be prevented from moving upwardly by a slidably removable keeper element **29** having a cable-receiving slot **30** therein, the keeper element **29** being slidably mounted in a rigid housing **31** which is affixed to the rigid tubular supporting structure **16** at its lower end and has the necessary support brackets **32** therein permitting inward and outward sliding movement of the keeper element **29** when the housing **33** is open. The lower end of anchoring cable **22** also has an eyelet **34** affixed thereto for attaching a tag line or rope **35** through the anchoring cable. The housing **31** has a pulley **36** journalled therein for guiding the tag line **35** and directing the tag line up the tubular track **17** when the anchoring cable **22** is released to allow the weight **27** to be lowered.

The weight **27** also cooperates with a coupling element **37** for attaching a removable hoist cable **38** to the anchoring cable **22**. The hoist cable **38** serves to support the personnel-carrying car **18** as it moves up and down the tower **15** and is normally carried with the car **18** and left in attached condition thereto by means hereinafter more fully set forth. The coupling element **37** may take any of a number of forms, but in the form shown, the coupling element **37** comprises a substantially cylindrical sidewall **39** with an enlarged weight-receiving opening **40** therein and an anchoring cable-receiving slot **41** at its upper end communicating with the opening **40**. A top plate **42** is welded to the cylindrical sidewall **39** and has an anchoring cable-receiving slot **43** therein communicating with the slot **41** in the sidewall so that the weight **27** may be merely slipped into the coupling element **37** which substantially encompasses the weight **27** to effect a connection between the anchoring cable **22** and the hoist cable **38**. The lower end **38***a* of the hoist cable remains adjacent the lower end of the tower **15** as the car **18** moves upwardly and downwardly on the tower. Although it is not necessary for the proper operation of the car **18**, the lower end of the hoist cable **38** may be attached by suitable temporary coupling means to the lower end of the tower in order to prevent this lower end from whipping around in the wind and endangering persons and equipment near by.

The personnel-carrying car **18** comprises a substantially rigid carriage-type structure constructed of rigid steel tubing **44** or other suitable frame material and preferably has one of the sides comprising a door **45** carried on suitable hinges **46** and normally maintained in closed condition by a latch **47**. Of course the cage-like personnel-carrying car **18** has a suitable floor **48** affixed to the framework **44**.

Means are provided for releasably attaching the car **18** to the tower **15** and in the form of the invention shown in FIGS. 1–10, said means comprises a pair of apparatus **49** and **50** respectively disposed adjacent the lower and upper portions of the car **18** and which attach the car to the track **17**. The apparatus **49** and **50** are identical in nature and an understanding of one will suffice for an understanding of both. As seen in FIG. 4, the apparatus **50** is mounted on one of the rigid tubular steel frame parts **44***a* and includes a mounting bracket **51** upon which rollers **52** and **53** are journalled to rotate on axes in a common plane but extending normal to each other and at approximately 45 degrees with respect to the rigid frame part **44***a* of the car. A second movable bracket **54** is slidably mounted on the frame part **44***a* and also mounts a pair of rollers **55** and **56** on axes in a common horizontal plane but extending at right angles to each other and at approximately 45 degrees with respect to the frame part **44***a*. It will be noted that each of the rollers **52**, **53**, **55** and **56** has a V-groove **57** in the periphery thereof for receiving and rolling along a respective corner of the rectangular track **17** so as to prevent any side-to-side or rotating movement of the car with respect to the track **17**.

The movable bracket **54** which encloses the rigid frame part **44***a* and is slidable therealong is controlled as to position by a linkage mechanism **58** shown in FIGS. 4 and 5. The linkage **58** includes a pair of elongate bar-type links **59** and **60** which are respectively swingably secured to the rigid frame part **44***a* by means of pivot **61** and to the movable bracket **54** by a pivot **62**, and are interconnected to each other by a pivot **63** disposed in closely spaced relation with the pivot **61** and in widely spaced relation with the pivot **62**. It will therefore be seen that when the link **59** is lifted up to the dotted position B of FIG. 5, the link **60** and bracket **54** are moved outwardly in the direction of arrow A and conversely, when the link **59** is swung downwardly from dotted position B, the bracket **54** is moved inwardly so as to closely couple the rollers **55** and **56** with the track **17**. The bracket **54** is thereby movable sufficiently so as to permit all of the rollers to be disengaged from the track **17**, thereby permitting removal of the car **18** from the tower. The links **59** and **60** are provided with aligned apertures **64** through which a locking pin **65** may extend to maintain the links in alignment and thereby lock the car to the track. The pin **65** has a keeper element **66** secured thereto and cooperating with the links **59** and **60** in maintaining the pin **65** in the aperture.

The car **18** is also provided with power-operated means engaging and crawling along the hoist cable **38** in upward and downward directions for moving the car upwardly and downwardly on the tower. In the form shown, such means include an electric motor **67** mounted on a pedestal

44*b* which is rigidly affixed to the framework 44 of the car. The motor 67 is of the conventional type commonly used in modern elevators and incorporating a power brake so as to prevent rotation of the output shaft when the motor is stopped. The motor 67 drives a cable-engaging power unit indicated in general by numeral 68 and shown in detail in FIGS. 6 and 7. The power unit 68 includes a frame structure 69 mounted on a rigid mounting plate 70 which is rigidly affixed to the pedestal 44*b*. The power unit 68 has a pair of rotary shafts 71 and 72 which are suitably mounted in bearings 73 on the side plates 69*a* and 69*b* of the frame structure 69 in spaced and parallel relation with each other. The shafts 71 and 72 have cable winding drums 74 and 75 keyed or otherwise non-rotatably affixed thereto respectively. The drums 74 and 75 have annular cable-receiving and carrying grooves 76 and 77 respectively in the peripheries thereof. It will be seen that the drum 74 has four annular grooves 76 and that the drum 75 has three annular grooves 77, and it will further be noted that the grooves in each of the drum peripheries are separated by ridge portions. The grooves 76 in the drum 74 are out of alignment with the grooves 77 in the drum 75. Each of the grooves of both drums confronts a ridge portion between a pair of grooves of the opposite drum.

Shafts 71 and 72 have equal sized sprockets 78 and 79 respectively affixed thereon as by keying, and an endless chain 80 is trained around the sprockets 78 and 79 so as to cause the drums to revolve at identical speeds.

The cable 38 extends downwardly to one of the end grooves 76 of the drum 74 and is then wrapped around the lower portion of the drum 74 and extends across to the drum 75 and is offset slightly so as to lie in the nearest end groove 77. The cable is then trained around drum 75 and then back into the second groove 76 of drum 74. In a like manner, the cable 38 is wrapped around the drums 74 and 75 in a plurality of convolutions, and at each of the grooves, the cable is offset slightly in relation to the position of the cable at the adjacent groove of the other drum. In the present form of the power unit 68, the cable 38 makes three complete convolutions around the drums and then extends downwardly from the drum 74 and in the same vertical plane with the upper portion of the cable 38. The cable then extends downwardly through an opening 48*a* in the floor of the car and is slidable in the opening.

Means are provided for urging and maintaining the cable 38 against the drum 74 at the grooves 76*a* and 76*b*, it being understood that the cable extends downwardly through the opening 48*a* from the groove 76*a*. In the form shown, such means includes a pair of small rollers 81 spaced from each other and mounted for rotation on parallel axes by a roller carriage 82 which is confined by a bracket housing 83 which is welded on the side plate 69*a*. A pair of springs 84 bear, at one end, against the bracket plate 83 and extend into recesses 85 of the roller carriage 82 for continuously urging the rollers 81 against the cable and thereby maintaining the cable tight against the drum grooves. It will be noted that the springs 84 are maintained in proper position by bolts 86.

In FIG. 8 is shown an enlarged detail of a portion of the drum 74 and one of the annular grooves 76 therein. It will be noted that the groove 76 has a curved contour to substantially conform to the peripheral shape of the cable 38. It will also be noted that a secondary groove 87 is provided at the bottom of groove 76 in communication therewith for defining annular edges 88 at the bottom of the groove. The cooperative effect on the cable is to provide additional restraining action on the cable so as to prevent any possible slippage on the cable in its convolutions around the drums.

The motor 67 is supplied with electric power through a cable 89 which is secured to the car and is suspended

therefrom. The lower end of the electric cable 89 will be connected to a suitable source of electricity.

In the form of the invention shown in FIGS. 11 and 12, the tower 15′ comprises a substantially rigid tubular supporting structure 16′, similar to the tubular structure 16 shown in FIG. 1. This form shown in FIGS. 11 and 12 is well adapted for use in situations where the framework F upon which flood lights and the like are carried, need only be positioned at intermediate heights. Under these conditions, the tubular supporting structure 16′ will not vary so greatly in diameter from the bottom to the top as was hereinbefore described in connection with the tubular structure 16. The tower 15′ also includes a rigid conduit 90 disposed at the inner side of the tubular structure 16′ and having an upper end cap 91 which is affixed as by welding to the inner side of the tubular structure 16′ adjacent its upper end. The cap 91 has an aperture 92 slidably receiving the anchor cable 22′ therein. The lower end of the rigid conduit 90 is secured by bracket sleeve 93 to the rigid tubular structure 16′, and also has a sleeve 94 secured thereto as by set screw 95. The sleeve 94 has a depending frame plate 96 affixed thereto which mounts a pulley 36′ over which the tag line 35′ is trained.

A removable stop 97 is applied to the lower end of conduit 90 and is in the form of a removable cap with a set screw 98 removably securing the cap to the conduit 90 and also having a slot 99 extending entirely through the sidewall of the cap and partially across the end wall to removably receive the anchor cable 22′ therein. The anchor cable 22′ carries an abutment or stop 28′ at its lower end and of such size as to be prevented from moving upwardly through the slot in the cap 97, but of such size as to pass freely through the conduit 90 when the cap 97 is removed. The lower end of the anchor cable also has an eyelet 34′ affixed thereto for attaching the tag line 35′ to the anchor cable. The upper end of anchor cable 22′ has a weight 27′ secured thereto which is similarly employed as the weight 27 in the form shown in FIGS. 1–10. The hoist cable 38′ has a coupling element 39′ similar to the coupling element 39 and removably attachable to the weight 27′. The hoist cable 38′ supports the personnel-carrying car 18′ which is similar in many respects to the car 18 with differences to be noted. The car 18′ carries a motor 67′ and a cable-engaging power unit 68′ identical to the unit 68 and operated by the motor 67′. As in the case of car 18, provision is made for the hoist cable 38′ to pass downwardly through the floor thereof.

It will be noted that in the form of the invention shown in FIGS. 11 and 12 that the personnel-carrying car 18′ is guided by rollers 100, 101, 102 and 103 which directly engage the exterior surface of the tubular supporting structure 16′. The rollers 100 are disposed in close proximity with the front side of the car 18′ and are secured by suitable brackets 104 to the frame of the car 18′. The rollers 100 and 101 are oriented so that the peripheries thereof lie substantially flush against the exterior periphery of the tubular supporting structure 16′.

The rollers 102 and 103 engage the opposite side of the tubular structure 16′ and are disposed adjacent the upper portion of the car 18′. The rollers 102 and 103 are journalled on a substantially U-shaped frame or mounting member 105 and are oriented so that the roller peripheries lie substantially flush against the outer surface of the tubular structure 16′. The U-shaped mounting member 105 is swingably secured by a hinge pin 106 to one side of the car 18′ and the mounting member 105 is removably secured at its other end to the other side of the car 18′ by a releasable securing device which could take a number of forms, but in the form shown, comprises a drop-in and lift-out pin 107 extending through aligned apertures in the mounting member 105 and in brackets 108 which are affixed as by welding to the frame of the car 18′.

As in the form of the invention shown in FIGS. 1–10 the

tower carries a sheave **25'** at its upper end over which is trained the anchor cable **22'**.

In the use and operation of the apparatus shown in FIGS. 1–10, the car **18** will not ordinarily be attached on the tower **15** when the tower is being used in its conventional fashion for supporting flood lights or some other device. When the tower is in this condition, the tag line **35** will have been removed entirely, and the car **18** will have been removed together with the hoist cable **38** and the anchor cable is held by the stop plate **29** in its normally confined position within the track **17** and the weight **27** merely hangs free at the upper end of the anchor cable. The door **33** of the housing **31** is locked to prevent tampering with the anchor cable. When it is desired to do some servicing or maintenance of equipment at the top of the tower, the tag line **35** is attached to the anchor cable and the stop plate **29** is removed. As the tag line is allowed to run, the weight **27** will pull the anchor cable and tag line upwardly through the track **17** and subsequently the weight will come to the ground. The car **18** may be wheeled into close proximity with the tower **15** on a two-wheeled hand truck or the like and may be placed on the ground adjacent the tower. At this time, the coupling between the anchor cable **22** and hoist cable **38** is effected. The tag line **35** is then pulled downwardly again to raise the hoist cable into operating position and subsequently, te stop plate **29** is inserted to again restrain movement of the stop **28** and anchor cable upwardly. At this time, the cables are essentially in the position shown in FIG. 1 with the exception that the car **18** may still be sitting on the ground adjacent the tower. The electric cable **89** supplies power for the motor **67** and when the motor-operating switch **67*a*** is operated, the motor is revolved and the cable-winding drums **74** and **75** in the power unit **68** are turned in the direction of arrow *a* as seen in FIG. 7. As the hoist cable **38** is progressively moved in the direction of arrows *a'*, around the drums and in the grooves, the car **18** will crawl upwardly along the hoist cable **38**. As the car initially moves upwardly, the car is merely suspended by the cable **38**. The car will be stopped at an elevation of two or three feet so that the bottom of the car clears the housing **31**.

The rollers **52**, **53**, **55** and **56** must then be applied to the track **17** and in order to effect this connection, the lever **59** is swung upwardly to and beyond the dotted position B shown in FIG. 5 so as to slide the bracket **54** and rollers **55** and **56** outwardly. The car is then adjusted in position so that the rollers **52** and **53** properly engage the track **17** as seen in FIG. 4, whereupon the lever **59** is again depressed for moving the rollers **55** and **56** into proper orientation with respect to the track as seen in FIG. 4. A linkage **58** is then locked by insertion of the pin **65**. At this time, the car **18** is ready for use in carrying a workman to the top of the tower.

The motor **67** will again be operated so as to again cause the car **18** to crawl upwardly along the cable. It will be understood that as the cable **38** is carried around its several convolutions in the power unit **68** the cable is positively guided half way around each of the drums **74** and **75** in the several grooves and then as the cable moves away from each drum and along a horizontal run, its direction is slightly changed so as to move to the slightly offset groove of the other drum. As the cable continues around the drums it progressively moves from one end of each drum to the other end until the cable passes around the outermost groove of drum **74** and under the rollers **81** which maintain the depending end of the cable in tight engagement with the drum. As the car progressively moves upwardly, the end of the cable **38** which depends from the car **18** becomes longer and this depending end of the cable moves downwardly through the opening **48*a*** in the bottom of the car. When the motor **67** is stopped so as to stop the car, the operation of the automatic brake is started so as to hold the car in the exact position at which it was stopped. The workman is carried to the top of the tower and when he has completed his work they descend the tower again in the car.

The car may be removed from the tower **15** by reversing the procedures set forth in connection with application of the car to the tower. The rollers **55** and **56** are moving away from the track to permit disassembly of the car from the track and then the car is lowered to the ground, whereupon the hoist cable **38** is lowered by allowing the anchor cable **22** and the tag line **35** to move upwardly through the track. Uncoupling between the hoist cable **38** and anchor cable **32** is effected. The anchor cable is then moved downwardly so as to position the weight **27** adjacent the upper end of the tower again. When the stop plate **29** is inserted to hold the anchor cable **22** in position, the tag line **35** is removed and the housing **31** is locked again.

Car **18**, together with the hoist cable **38** may then be transported to a different tower for carrying the workmen to the top for maintenance and service work.

It will be noted in the form of the invention shown in FIGS. 1–10 that because of the use of the track **17** and the rollers on the car which guide along the track, the orientation of the car **18** remains fixed in relation to the tower or in relation to the vertical. This is so regardless of the difference in diameter of the tower from the bottom to the top. It should further be noted that an additional safety cable **109** may be carried adjacent the track **17** and anchored at the upper and lower ends of the track. This safety cable **109** may be used by the workmen for attaching safety appliances on their safety belts so as to provide safety protection for the workmen when they leave the car at an elevated position on the tower.

The use and operation of the form of the invention shown in FIGS. 11 and 12 is essentially the same as the operation of the form shown in FIGS. 1–10. In this installation, the tag line **35'** is inserted into the tubular structure **16'** through the manhole **16*a'***. The stop cap **97** is removable to permit movement of the anchor cable **22'** upwardly through the conduit **90** when the hoist cable is to be applied. This car **18'** is applicable to and removable from the tubular supporting structure **16'** by releasing the roller-mounting member **105** from the car **18'** at the securing pin **107** so as to permit swinging of the rollers **102** and **103** away from the car as illustrated in the dotted position C shown in FIG. 12. In this form of the invention, the orientation of the car with respect to the vertical changes slightly as the car moves upwardly and downwardly on the tower. To offset this effect, the brackets **104** and mounting member **105** are adjusted in length so as to normally orient the car in slightly tilted position wherein the top of the car tilts inwardly slightly toward the tower when the car is disposed at the bottom of the tower. Because the tubular support structure **16'** reduces in diameter toward the top of the tower, the upper portion of the car **18'** will gradually tilt outwardly slightly from the tower at elevated positions. The amount of tilting is actually extremely small in towers of intermediate height and is not objectionable in the least.

It will, of course, be understood that various changes may be made in the form, details, arrangement and proportions of the parts without departing from the scope of my invention which consists of the matter shown and described herein and set forth in the appended claims.

What I claim is:

1. Apparatus for carrying personnel up and down a tower, comprising a single cable having an upper end secured in stationary position to the top of the tower and hanging downwardly therearound, a personnel-carrying car having means guiding the car along the tower, a power unit in the car and including a pair of cable winding drums with parallel axes lying in a common substantially horizontal plane, said drums having outer peripheries in confronting relation with each other and having annular cable grooves in said peripheries and also having annular

ridges between the grooves, the grooves of one drum confronting the ridges of the other drum whereby the grooves of the drums are in offset relation with respect to each other, the upper and lower ends of the cable extending upwardly and downwardly respectively from spaced first and second grooves of the same drum, the cable being wrapped in convolutions encompassing both drums and lying in adjacent grooves of the drums between said first and second grooves, a pressure roller confronting said second groove and engaging the cable lying therein for holding the cable tightly against the drum adjacent the downwardly extending end of the cable, spring means urging said pressure roller against the cable, and reversible rotary driving means connected with one of the drums for revolving the drum and moving the cable therearound.

2. Apparatus for carrying personnel up and down a tower,

a personnel-carrying car having a top and bottom and also having a forwardly facing side confronting the tower,

means connected with the top of the tower and detachably suspending the car for movement upwardly and downwardly along the tower,

a car-guiding track adapted for attachment to the tower and having a rear side confronting the forward side of the car and said track also having a front side,

a pair of lower rollers journalled on the car adjacent the bottom thereof and on substantially horizontal axes extending obliquely with respect to each other and converging in a rearward direction, said lower rollers having forwardly facing peripheral surface portions engaging and cradling the rear side of the track,

a pair of upper rollers adjacent the top of the car and having rearwardly facing peripheral surface portions engaging and cradling the front side of the track,

a pair of upper roller mounts journalling said upper rollers on substantially horizontal axes extending obliquely of each other and converging in a forward direction,

means attaching said mounts to the top of the car and including an elongate rigid member affixed to the car and extending transversely across the forward side of the car, and a slide affixed to one of the mounts and slidably mounted on said rigid member for moving the mount and roller toward and away from the track,

and releasable apparatus engaging the slide and rigid member in cooperative slide-locking relation and being operable to release the slide and permit movement thereof outwardly from the track.

3. Apparatus for supporting and providing access to equipment which is to be mounted in an elevated position, said apparatus including an upright and substantially rigid supporting structure having an upper end upon which such equipment may be mounted, the upright structure flexing slightly as the upper end thereof sways under influence of wind, a personnel-carrying car, means supporting the car from the top of the structure and producing movement of the car upwardly and downwardly along the structure, an elongate track extending upwardly along the structure in spaced relation therewith, means guiding the car along the track, the track having a plurality of elongate track sections in end-to-end telescopically related relation with each other to permit the track to change in length as the tower sways, each of said track sections having a single pivotal mounting securing the track section to said structure and to permit swinging of the track section about a horizontal axis whereby to permit the track to be telescopically extended and retracted without being damaged as the tower sways and to provide continuous guiding for the car upwardly along the tower.

4. Apparatus for use with a tag line in detachably mounting a personnel-carrying car adjacent a tower to permit the car to move upwardly and downwardly along the tower, said apparatus comprising a tower including a stationary upright tubular member extending between the top and bottom of the tower, the tubular member having cable-receiving openings at the upper and lower ends thereof, a sheave at the top of the tower with one side of the peripheral surface of the sheave disposed at the exterior of the tower and having the other side of the peripheral surface thereof in aligned relation with the cable-receiving opening in the upper end of the tubular member, an anchor cable normally extending upwardly through said tubular member and through the cable-receiving openings at the upper and lower ends thereof, the upper end of the anchor cable being trained over said sheave, the upper terminal end of the anchor cable depending from the sheave at the exterior of the tower, a weighted coupling part affixed on the depending upper terminal end of the anchor cable, means on the top of the tower providing a mounting journalling said sheave and also defining a stop engageable with said weighted coupling part and preventing movement of said part over the sheave, a second coupling part on the lower end of the anchor cable and being movable upwardly through said tubular member and through the cable-receiving opening in the lower end of said member, said second coupling part being attachable to such a tag line to permit upward movement of the anchor cable through the tubular member and lowering of the weighted coupling part into proximity with the bottom of the tower, interengaging and releasable anchor means on the lower end of the tubular member and on the lower end of the anchor cable to normally hold the anchor cable in stationary position, a hoisting cable at the exterior of the tower and having upper and lower ends, releasable coupling means on the upper end of the hoisting cable and detachably connected with said weighted coupling part, said hoisting cable being adapted for connection to such a personnel-carrying car for supporting the same, whereby to permit lowering of the hoisting cable to the ground to facilitate removal of the hoisting cable and to permit subsequent storing of the anchor cable within the tubular member with only the depending upper terminal end of the anchor cable exposed when the tower is in normal service.

5. The invention set forth in claim 4 wherein said tubular member is disposed at the exterior of the tower and comprises a rigid car-guiding track.

6. The invention set forth in claim 4 wherein the tower has a hollow interior extending from top to bottom and wherein said tubular member is disposed within said tower, said tower having an opening adjacent the bottom thereof providing access to the lower end of the tubular member and to the anchor cable.

7. The invention set forth in claim 4 and including a tag line-guiding sheave disposed below the lower end of the tubular member and in alignment therewith for guiding the tag line upwardly into the tubular member for raising and lowering the anchor cable.

8. Apparatus for use in detachably mounting a personnel carrying car adjacent a tower to permit the car to move upwardly and downwardly along the tower,

said apparatus comprising means defining a tower having a cable guideway extending between the top and bottom of the tower and having openings at the upper and lower ends of the guideway,

a sheave at the top of the tower with one side of the peripheral surface of the sheave disposed at the exterior of the tower and having the other side of the peripheral surface thereof in aligned relation with the cable-receiving opening at the upper end of the guideway,

an anchor cable normally extending upwardly through said guideway and through said opening at the upper and lower ends thereof, the upper end of the an-

chor cable being trained over said sheave, and depending from the sheave at the exterior of the tower,

means connected with the lower end of the anchor cable releasably containing and controlling upward movement of the lower end of the anchor cable through the guideway,

means on the upper end of the anchor cable defining a weight and coupling part for drawing the anchor cable over the sheave toward the exterior of the tower and toward the ground when the lower end of the anchor cable is released,

means on the top of the tower providing a mounting journalling said sheave and also defining a stop limiting movement of the anchor cable over the sheave,

a hoisting cable at the exterior of the tower and having an upper end with releasable coupling means thereon detachably connected with said part, said hoisting cable being adapted for connection to such a personnel carrying car for supporting the same, whereby to permit lowering of the hoisting cable and permitting subsequent storing of the anchor

cable within the guideway and with only the depending upper end of the anchor cable exposed when the tower is in normal service.

References Cited in the file of this patent

UNITED STATES PATENTS

365,410	Sculthrop	June 28, 1887
598,294	Robbins	Feb. 1, 1898
691,276	Kottgen	Jan. 14, 1902
1,083,508	Schlosser et al.	Jan. 6, 1914
1,348,138	Hunt	July 27, 1920
1,682,083	Johnston	Aug. 28, 1928
2,309,123	Kiesling	Jan. 26, 1943
2,438,791	Russell	Mar. 30, 1948
2,531,346	Schuchert	Nov. 21, 1950
2,654,638	Elliott	Oct. 6, 1953
2,761,396	Harlan	Sept. 4, 1956

FOREIGN PATENTS

864,960	Great Britain	Apr. 12, 1961