# United States Patent

**McKenna et al.**

[15] **3,653,091**

[45] **Apr. 4, 1972**


## [54] CURTAIN ROD, PULLEY CASE, AND SUPPORT COMBINATION


[72] Inventors: **Robert P. McKenna**, 111 Liverpool Street, Warwick, R.I. 02886; **John E. Williamson**, 22 Third Street, W. Barrington, R.I. 02890



[22] Filed: **May 25, 1970**

[21] Appl. No.: **40,215**

[52] **U.S. Cl.** ..... **16/94**, 160/345

[51] **Int. Cl.** ..... **A47h 1/10**

[58] **Field of Search** ..... 16/87.4, 87.6, 93 D, 94 D, 16/95 D; 160/345, 346, 347



[56] **References Cited**

UNITED STATES PATENTS

| | | | |
|---|---|---|---|
| 1,662,928 | 3/1928 | Kirsch | 16/93 D |
| 3,155,149 | 11/1964 | Ford | 16/94 D X |
| 2,590,370 | 3/1952 | Bell | 160/345 |
| 2,986,224 | 10/1949 | Stutz | 160/345 |
| 3,333,622 | 8/1967 | Graber | 160/345 |
| 3,329,384 | 7/1967 | Salzmann | 160/345 X |
| 3,521,317 | 7/1970 | Ford | 160/346 X |
| 3,470,578 | 10/1969 | Graber et al. | 16/94 D |
| 3,119,443 | 1/1964 | Stubblefield | 160/345 |



*Primary Examiner*—Bobby R. Gay
*Assistant Examiner*—Peter A. Aschenbrenner
*Attorney*—Russell & Nields



[57] **ABSTRACT**

A hollow, tubular, curtain rod of the draw curtain type is provided with an internally mounted pulley case and a support bracket arrangement whereby the pulley case rests on the bracket and the rod rests on the pulley case. This provides for direct application of stress on the draw cords to the bracket rather than to the rod. In addition means are provided for securing the case against motion relative to the bracket at the same time without introducing an unsightly bracket arm in an exposed position at the front of the rod. Other features include adaptability of the pulley case for fitting either of two sizes of telescoping rods without modification.


**10 Claims, 7 Drawing Figures**

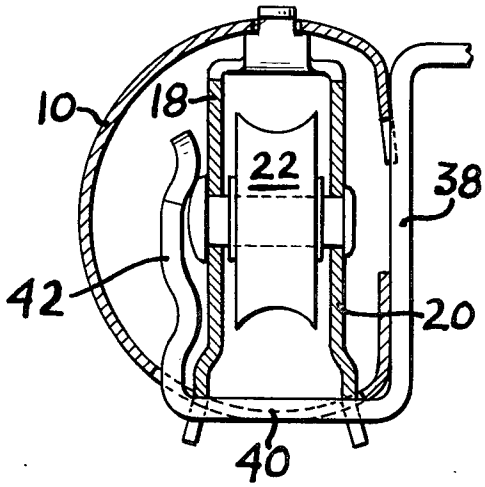

PATENTED APR 4 1972

3,653,091

FIG. 1

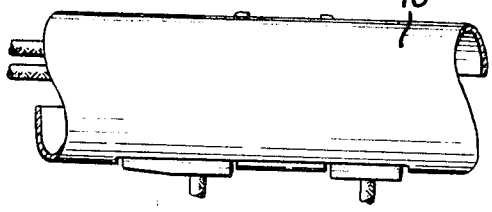


FIG. 2

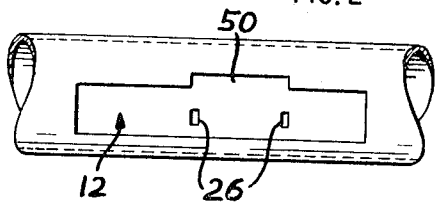


FIG. 3

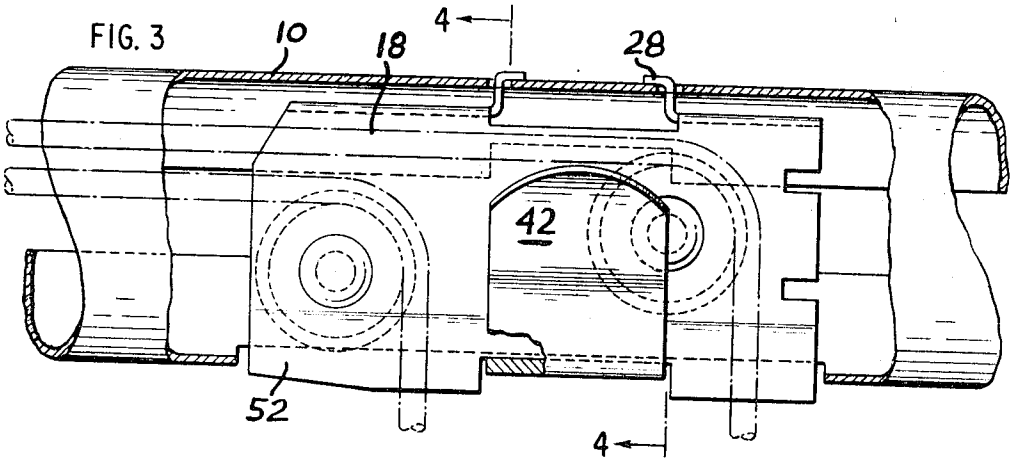


FIG. 4

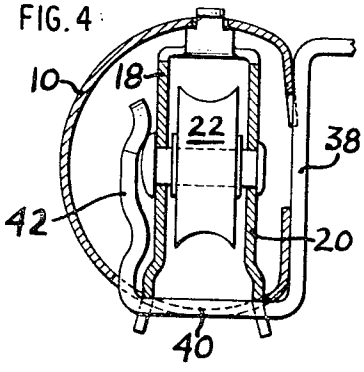


FIG. 5

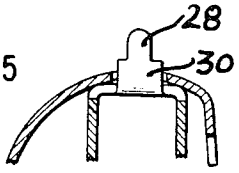


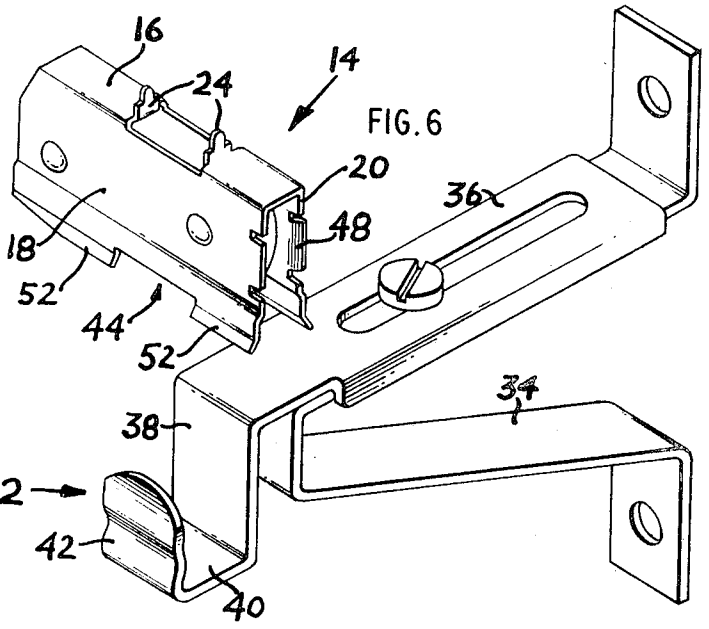


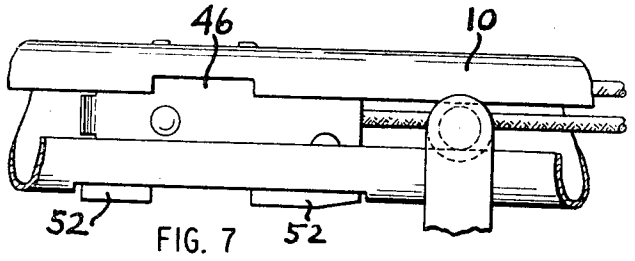


FIG. 7

INVENTORS
Robert P. McKenna
and John E. Williamson

BY Russell & Nields

ATTORNEYS

# CURTAIN ROD, PULLEY CASE, AND SUPPORT COMBINATION

## BACKGROUND AND OBJECTS OF THE INVENTION

This invention relates to drapery hardware and more particularly to a support and pulley case arrangement for hollow slotted tubular curtain rods of the draw curtain type. Such rods are usually provided with a pulley arrangement at one end to receive and accomodate draw cords which communicate through the interior of the rod to curtain carriers adapted to slide longitudinally in the slot of the rod. In the past, such draw curtain rods have usually been built to withstand not only the stresses applied to the rod from the weight of the curtain, but also the stresses from the draw cords transmitted to the rod from the pulleys. We have found, however, that the stresses applied by the cords are actually greater than those coming from the weight of the curtain alone, and that this has led to the use of heavier weight metal in the rod than is actually necessary for merely supporting the curtains, and the result is an inefficient use of materials. It is therefor an object of this invention to provide a means for applying the stresses arising from the draw cords directly to an appropriately reinforced wall bracket without those forces being communicated through the rod material to the bracket. A concommitant object is to provide a relatively light-weight rod, having no more strength in itself than is needed for an adequate curtain supporting function together with separate means for taking care of the draw cord stress resisting function.

In addition, it is an object of this invention to provide a means for supporting the rod in which the support element serves a dual function of directly resisting the draw cord stresses, and at the same time restraining the curtain carriers from escaping from the rod. Another subsidiary object is to provide a support element satisfying the foregoing objects without at the same time adding any exposed elements or brackets on the front surface of the rod.

An additional object has to do with adapting the pulley case for insertion into and connection to either of two sizes of rod so that it can be used at either end of telescoping rods without requiring modification.

## BRIEF SUMMARY OF THE INVENTION

In the accomplishment of the foregoing objects in a preferred embodiment of the invention, a hollow tubular slotted curtain rod, often in two telescoping sections, is used. One end of the rod is perforated at its lower surface to provide a pulley case receiving opening into which a pulley case is fitted and secured in fixed relation to the rod. The lower surface of the pulley case is exposed, and a U-shaped support bracket is provided to receive and support the base of the pulley case. In this way the rod is actually supported by the pulley case and the pulley case only by the bracket. Thus the rod need only be strong enough to support the curtains themselves and need not also be capable of resisting the draw cord stresses. These latter are absorbed entirely the pulley case and bracket.

Additional features include means associated with the pulley case for fixing it against motion relative to the bracket in all directions except upward motion vertically, and also for holding it against such upward motion by spring friction. Another feature includes means in combination with the foregoing for hiding the front arm of the support bracket within the rod so as to leave the front surface of the rod fully exposed and unmarred by the bracket. Still another feature is the combined provision of a gate associated with the pulley case for inserting or removing curtain carriers into or out of the slot of the rod, together with means on the support bracket for closing the said gate when the rod is mounted on the bracket.

Additional features include adaptation of the pulley case for insertion into and securing it to either end of telescoping rods without requiring modification of the case or the rods.



Accordingly, the invention provides for use of a lighter weight, less expensive curtain rod material while maintaining adequate supporting strength. At the same time, it presents a more attractive arrangement and with additional qualities of versatility and ease of use.

## BRIEF DESCRIPTION OF DRAWINGS

FIG. **1** is a view in front elevation of a portion of a tubular curtain rod with pulley case and bracket inserted and with draw cords in place;

FIG. **2** is a view in bottom elevation of the rod portion of FIG. **1** with the pulley case, bracket, and cords removed;

FIG. **3** is a partial cutaway view depicting the interior elements of FIG. **1**, on a larger scale;

FIG. **4** is a sectional view in end elevation taken along line **4—4** of FIG. **3**;

FIG. **5** is a partial view, similar to FIG. **4**, illustrating on a larger scale the fitting of the pulley case into a smaller diameter rod;

FIG. **6** is a perspective view of the pulley case, the support bracket, and their relationship;

FIG. **7** is a view in rear elevation of the rod with pulley case, cords, and an idler carrier showing the carrier gate.

## DETAILED DESCRIPTION OF THE PREFERRED EMBODIMENT OF THE INVENTION.

The preferred embodiment herein shown comprises a hollow tubular slotted curtain rod **10** which may include sections of different sizes in telescoping relation. One end of the rod is perforated at its lower face as indicated at **12** in FIG. **2**, to provide a pulley case receiving opening.

The pulley case, indicated generally at **14** in FIG. **6**, is made from a single stamping bent into an inverted U-shaped channel to provide a top wall **16**, a front wall **18**, and a rear wall **20**. Pulleys **22** are appropriately mounted in the pulley case.

The top wall **16** of the pulley case is stamped to provide two upstanding rod support lugs **24** which fit into appropriate perforations **26** (see FIG. **2**) in the top of the rod.

When the pulley case is inserted into the rod the lugs **24** pass through the perforations **26** and are then bent over to secure the rod and pulley case in fixed relation. In order to make this possible for either size of two telescoping rods the lugs **24** are provided with a small upper portion **28** (see FIG. **5**), and a widened lower portion **30**. The smaller of the rods then is provided with larger perforations **26** so that the pulley case fits further up into the smaller rod and the entire lug **24** including the widened portion **30** is bent over to secure the pulley case. Whereas the larger of the rods is provided with small perforations **26** which can receive only the upper portion **28** of the lugs **24**. In this way the lower edge of the pulley case is positioned accurately and automatically in relation to the pulley case receiving opening **12**.

The pulley case is supported by a U-shaped bracket indicated generally at **32**, comprising a base **34** adapted for connection to a wall, an extension arm **36**, and a U-shaped member at the end of the extension arm **36** comprising a rear arm **38**, a bottom arm **40** and a front arm **42**. The pulley case fits down into the bracket, and its front and rear walls **18** and **20** are notched at **44** to prevent longitudinal motion of the pulley case relative to the bracket. Also in this position the lower surfaces of walls **18** and **20** in the said notched areas rest on the bottom wall **40** of the U-shaped bracket. This holds the pulley case from tipping relative to the bracket. Inward and outward motion is restrained by the front and rear arms of the bracket, and upward vertical motion is restrained by spring friction between the front arm **42** of the bracket and the front wall **18** of the pulley case.

The rod **10** is also provided with a carrier gate or loading station indicated at **46** (see FIG. **7**) for inserting or removing carriers. When the rod is mounted on the bracket, however, the rear arm **38** of the bracket covers up the gate **46** and the carriers cannot then inadvertently escape. An ear **48** is also

provided on the pulley case for preventing carrier motion past the pulley case even when the rod is not mounted. The ear **48** must be bent from only one side of the pulley case as may be appropriate for a right hand or left hand mount. Otherwise the pulley case needs no special adaptation for changing from large to small rod or right to left hand mount.

In order to hide the front arm **42** of the bracket, the pulley case receiving opening **12** is provided with a widened portion **50** (see FIG. **2**) so that when the pulley case is mounted on the bracket, the front arm **42** of the bracket slides up inside the rod along the front wall **18** of the pulley case. This preserves the appearance of the rod and also avoids scratching or scarring the rod which otherwise would occur.

The walls **18** and **20** of the pulley case are also provided with outwardly flared lower portions **52** which serve a combined function. First, they provide a tapered run-in for the draw cords. This provides for smoother operation and less wear on the cords. Second, the flared portions **52** provide a tapered fit along the sides of the pulley case receiving opening **12**, thus making a more secure and rattle free connection for the combination.

Having now described the preferred embodiment of the invention, various modifications will now be apparent to those skilled in the art, and therefore it is not intended to limit it to the specific form shown but rather to the broader concepts defined in the appended claims:

We claim:

**1**. Apparatus for supporting draw curtains comprising in combination; a hollow, tubular, continuous, slotted curtain rod perforated at its lower surface at one end to form a pulley case receiving opening; means connecting said pulley case to said rod in said opening with a lower surface of said pulley case remaining exposed and said pulley case in supporting relation to said rod; a bracket having a mounting end and a support end; said mounting end adapted for attachment to a wall; and said support end adapted to receive and support said lower surface of said pulley case, whereby said pulley case and the pulleys therein are supported directly by said bracket, said curtain rod is supported directly against downward forces by said pulley case, and the only forces applied to said rod derive from the curtain as distinct from the draw cords.

**2**. Apparatus as defined in claim **1** further characterized by the support end of said bracket formed into a generally U-shaped portion having an outer and a bottom arm adapted to receive said pulley case and an inner arm adapted to abut against an exterior wall of said curtain rod.

**3**. Apparatus as defined in claim **2** further characterized by resilient means associated with said U-shaped portion for holding said case therein by spring responsive frictional forces.

**4**. Apparatus as defined in claim **2** further characterized by interlocking means on said bracket and pulley case for holding said case on said bracket in fixed relation thereto against relative motion in all directions except upward therefrom.

**5**. Apparatus defined in claim **2** further characterized by said pulley case receiving opening being larger than said pulley case and defining between said rod and said pulley case a bracket receiving opening along the surface of said pulley case which normally faces away from the mounting end of said bracket; and the outer arm of said U-shaped portion fitting into said bracket receiving opening.

**6**. Apparatus defined in claim **2** further characterized by said curtain rod adapted to receive curtain carriers slidable in the slot of said rod; a carrier loading station including a widened portion of said slot positioned adjacent to said pulley case; and the inner arm of said U-shaped portion covering said carrier loading station when said pulley case is mounted on said bracket.

**7**. Apparatus defined in claim **2** further characterized by means on said pulley case for preventing carriers from sliding past said pulley case.

**8**. A pulley case and hollow slotted curtain rod combination comprising; an outer and an inner rod in telescoping relation; said outer rod have a greater I.D. than the O.D. of the inner rod; each rod perforated at its under surface to provide a pulley case receiving opening; a pulley case dimensioned to fit into each said opening, means on said pulley case for positioning the upper portion of said pulley case adjacent to the upper interior surface of said inner rod when said case is fully lodged in the pulley case receiving opening of said inner rod, and for positioning the upper portion of said case below the upper interior surface of said outer rod when said case is fully lodged in the pulley case receiving opening of said outer rod by a dimension equal to the difference of dimension between said outer and inner rods; and means for locking said pulley case in said rods.

**9**. The pulley case and rod combination defined in claim **8** further characterized by a pair of lugs on the upper surface of said pulley case, each said lug having a small upper portion and a larger lower portion; perforations formed in the upper surface of said outer rod spaced and dimensioned to receive the small upper portion only of said lugs; and perforations formed in the upper surface of said inner rod spaced and dimensioned to receive the larger lower portions of said lugs.

**10**. The pulley case and rod combination defined in claim **8** further characterized by means on said pulley case for preventing curtain carriers from sliding past said case in the slot of said rod.

* * * * *