US 20250204615A1

(19) **United States**

(12) **Patent Application Publication** (10) **Pub. No.: US 2025/0204615 A1**

MAYES (43) **Pub. Date: Jun. 26, 2025**

(54) **SUPPORT GARMENTS**

(71) Applicant: **Tamika MAYES**, Detroit, MI (US)

(72) Inventor: **Tamika MAYES**, Detroit, MI (US)

(21) Appl. No.: **19/075,363**

(22) Filed: **Mar. 10, 2025**

Related U.S. Application Data

(63) Continuation of application No. 17/732,210, filed on Apr. 28, 2022, now Pat. No. 12,245,644.

Publication Classification

(51) **Int. Cl.**
A41C 3/00 (2006.01)

(52) **U.S. Cl.**
CPC ***A41C 3/0064*** (2013.01)

(57) **ABSTRACT**

A support garment may have a seamless support garment configured for use by a person. The garment may have first and second arm openings configured to be about 0.5 to 1 times greater than a diameter of an average user's arms; a neck opening configured to be about 2 to 4 times greater than a diameter of an average user's neck; a portion of the arm openings and neck opening opposite each other form integral shoulder straps; a band configured to fit at an under bust of the user defining a torso opening; two cup regions positioned above the band to receive the user's breasts, two cup regions positioned above the band to receive the user's breasts, the cup regions being 100-200 percent thicker at a portion of the cup configured for placement of the user's nipple and tapering to a garment body thickness as the taper extends away from the nipple portion; wherein, the support garment is configured from a material having between 50-200 percent elasticity.

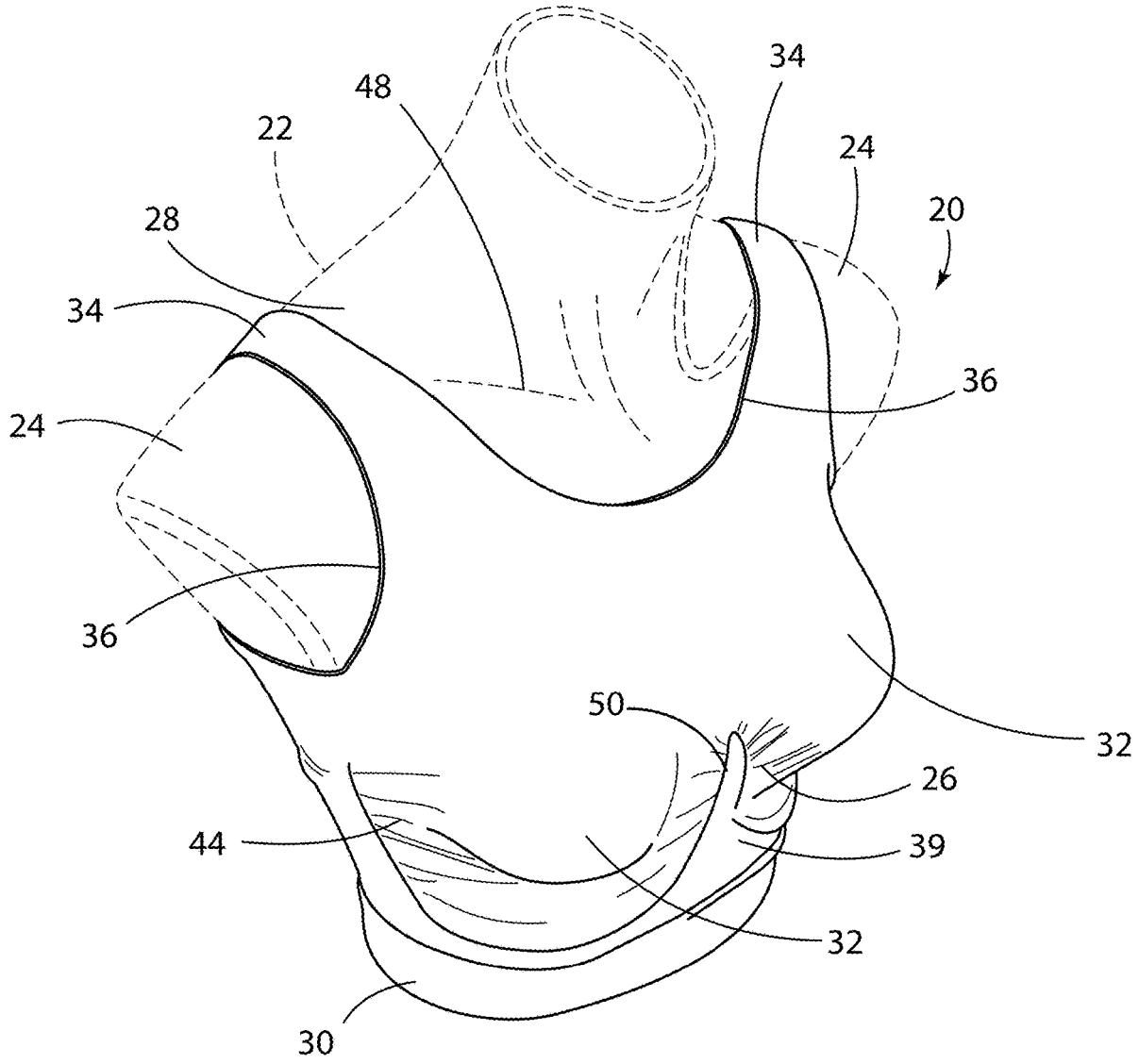

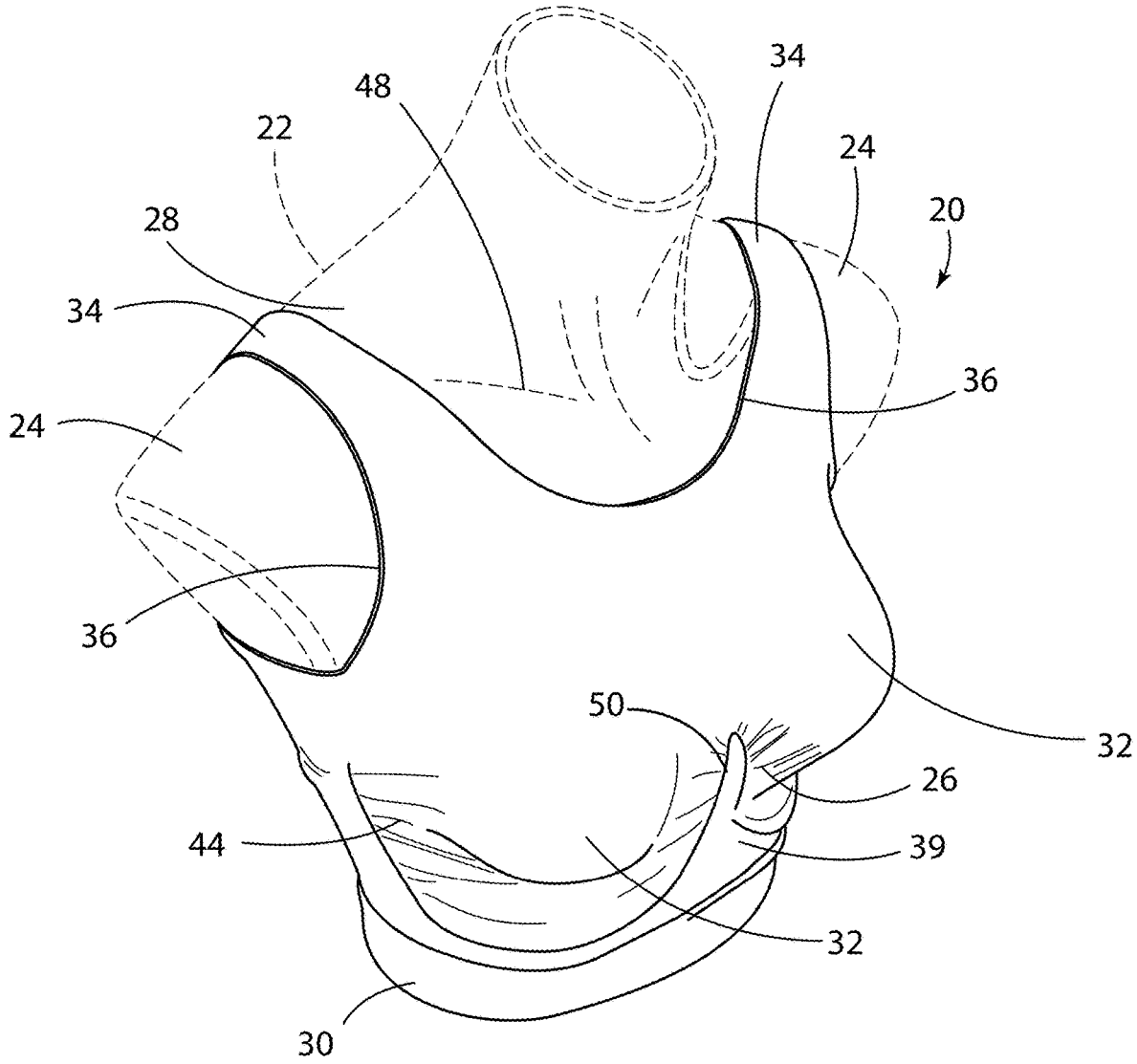

FIG. 1

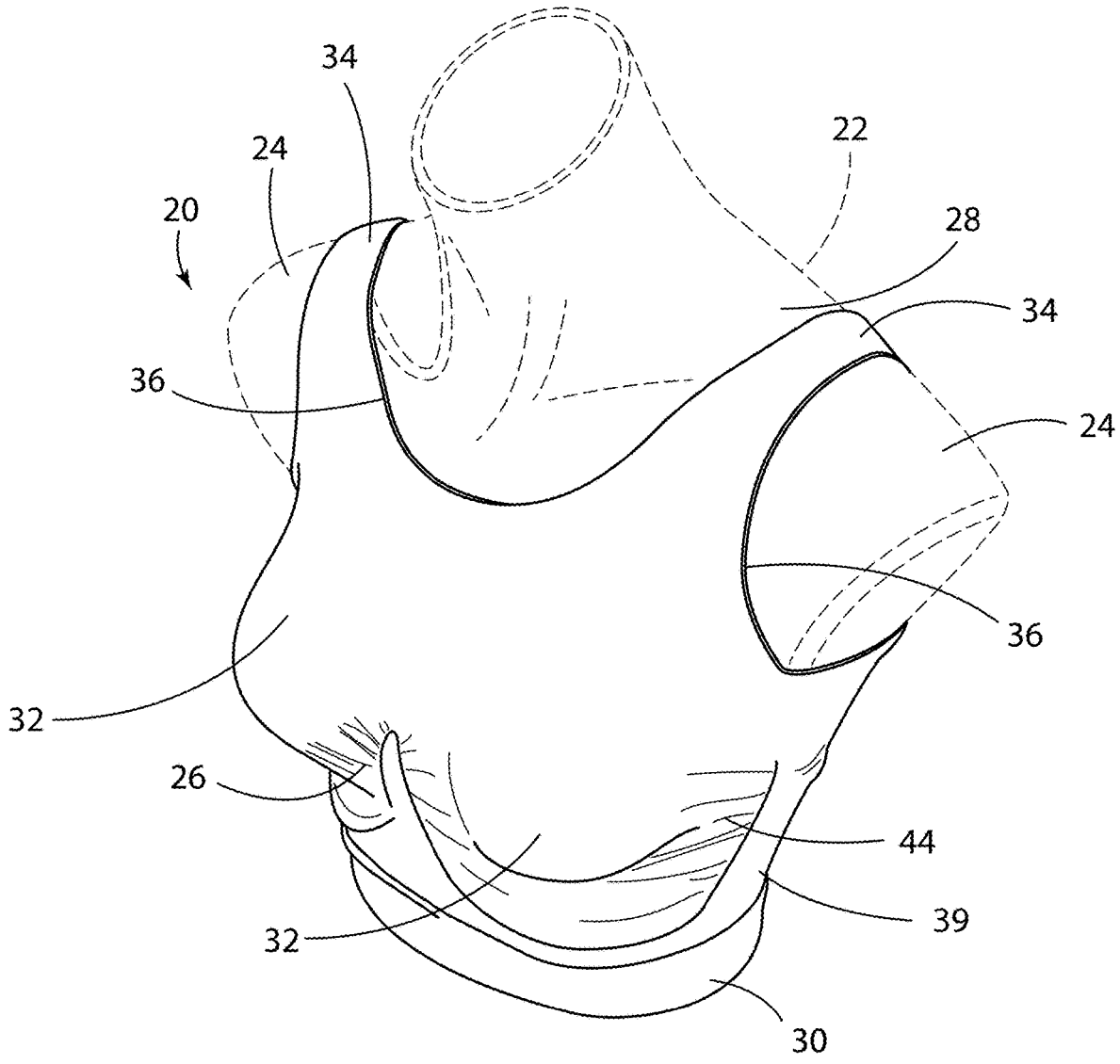

FIG. 2

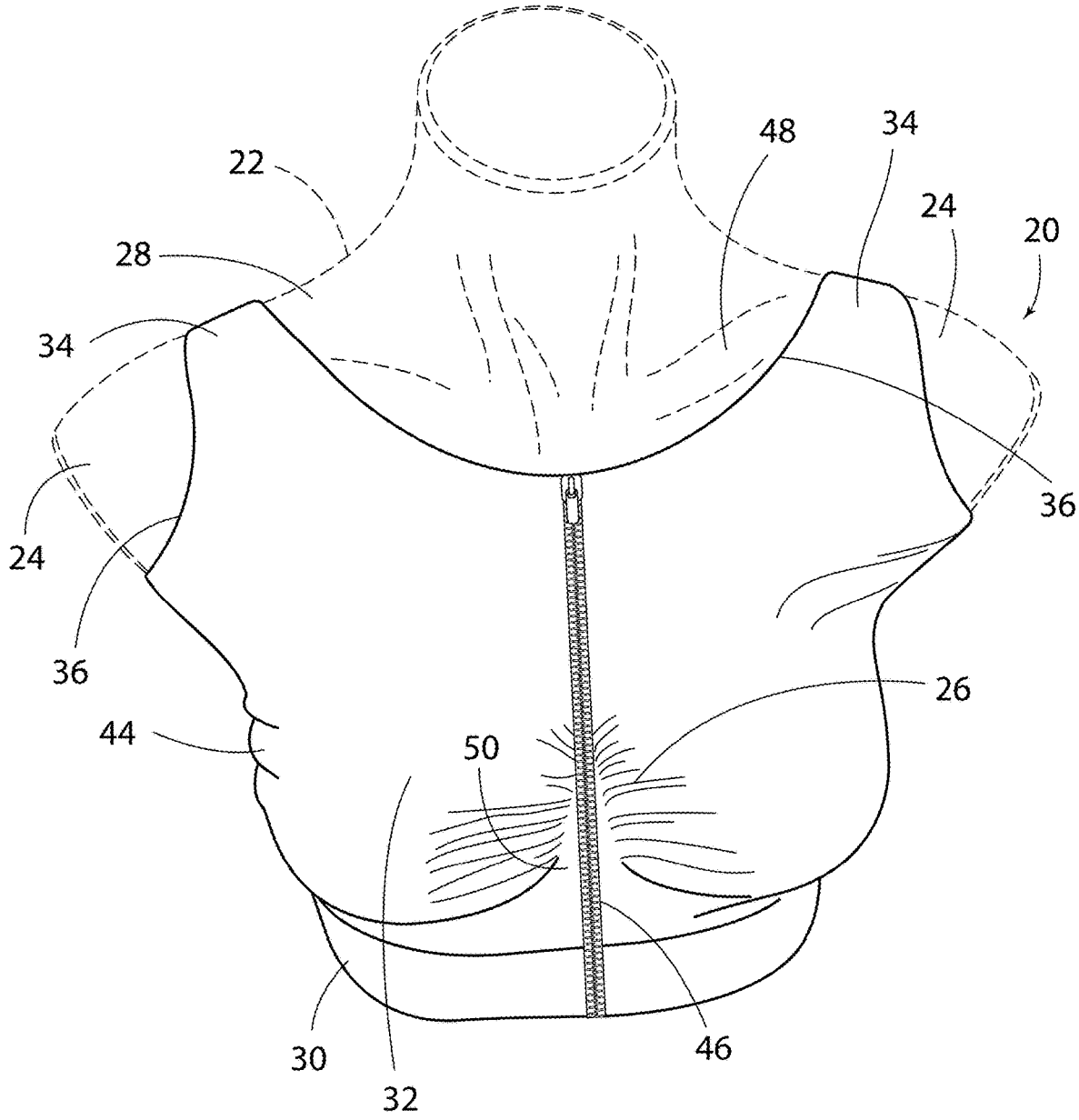

FIG. 3

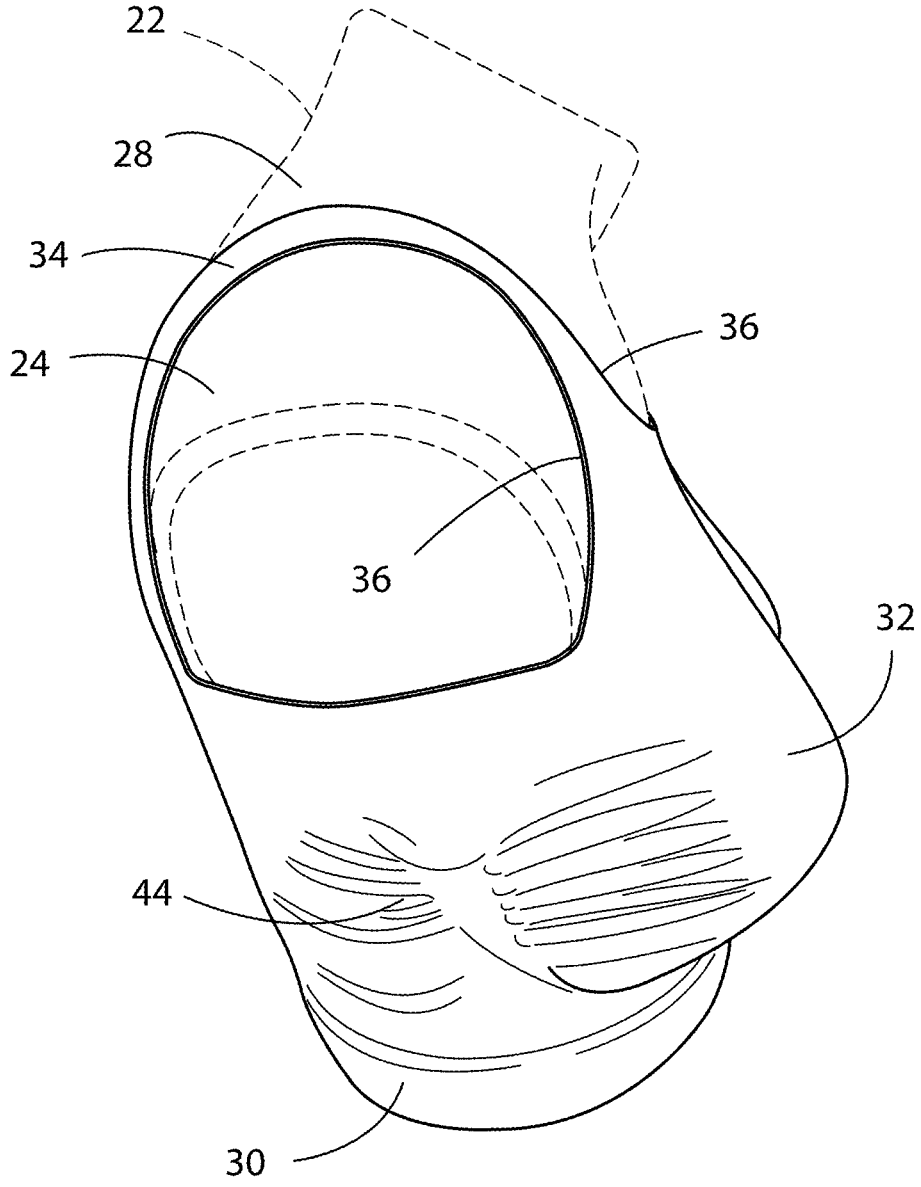

FIG. 4

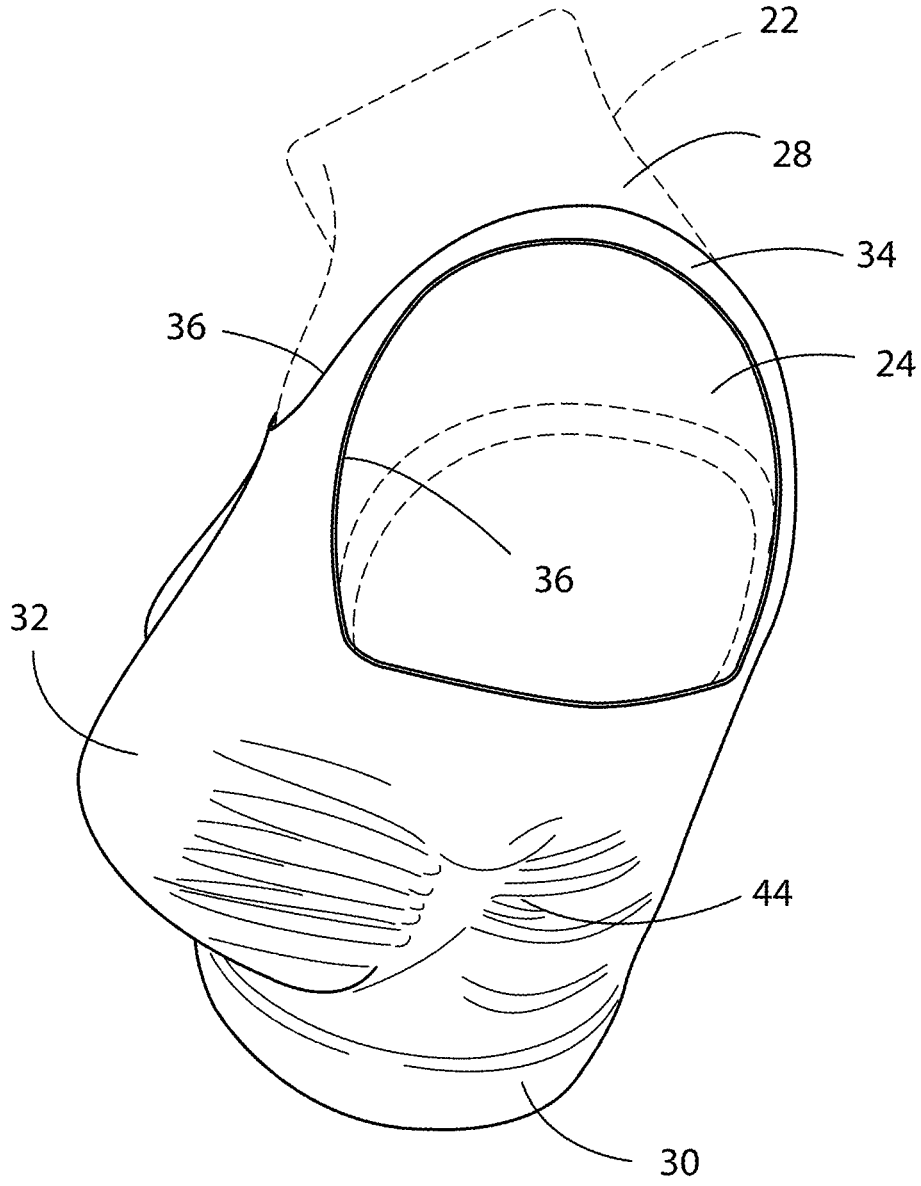

FIG. 5

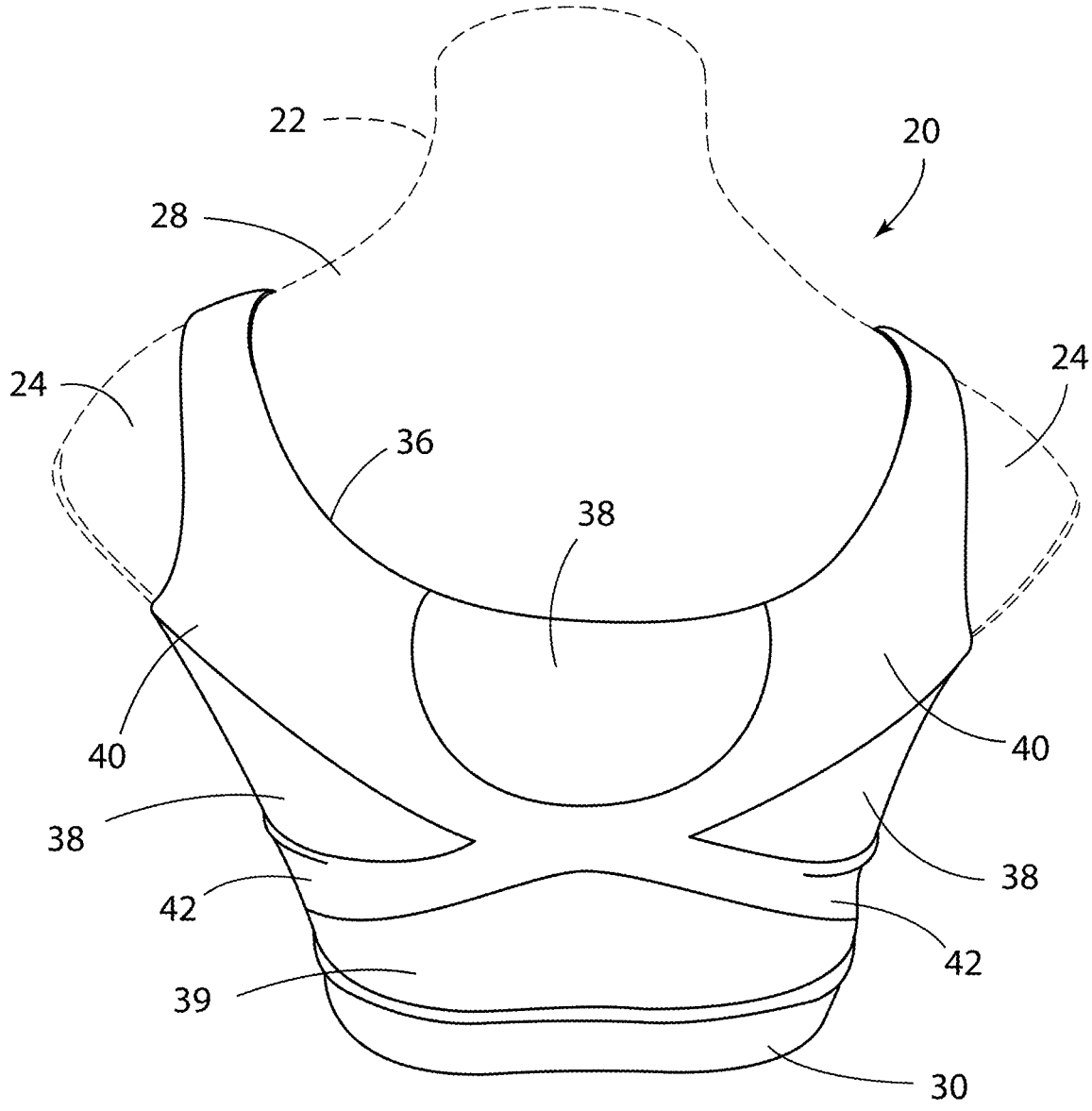

FIG. 6

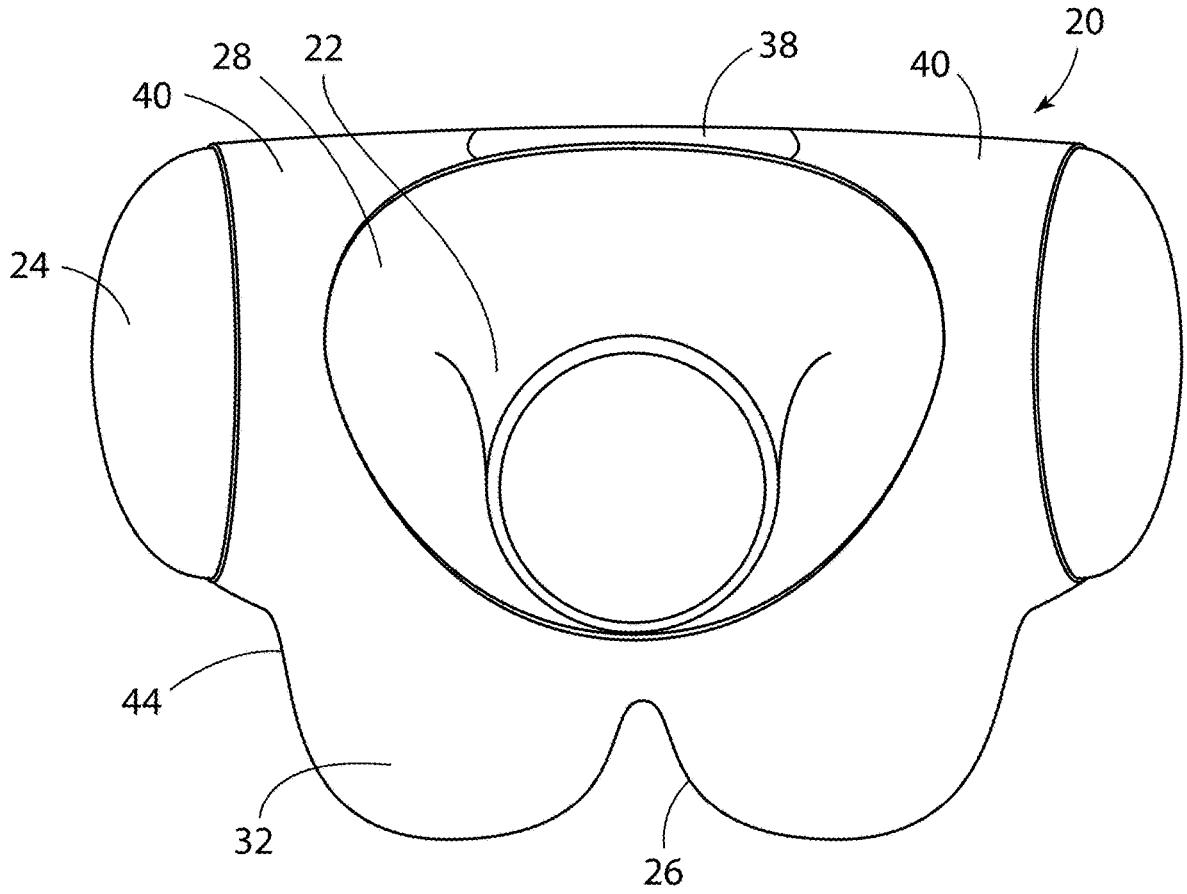

FIG. 7

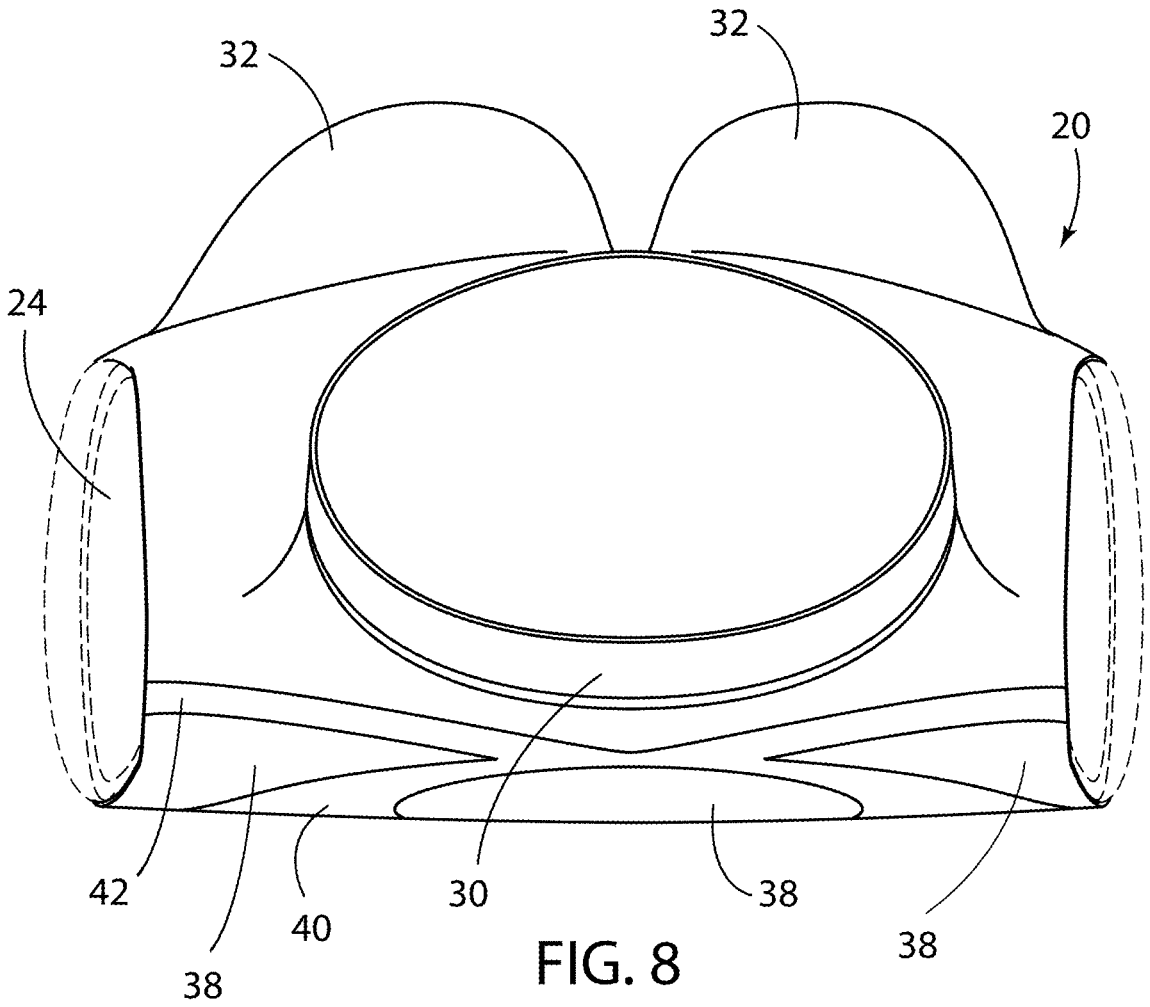

FIG. 8

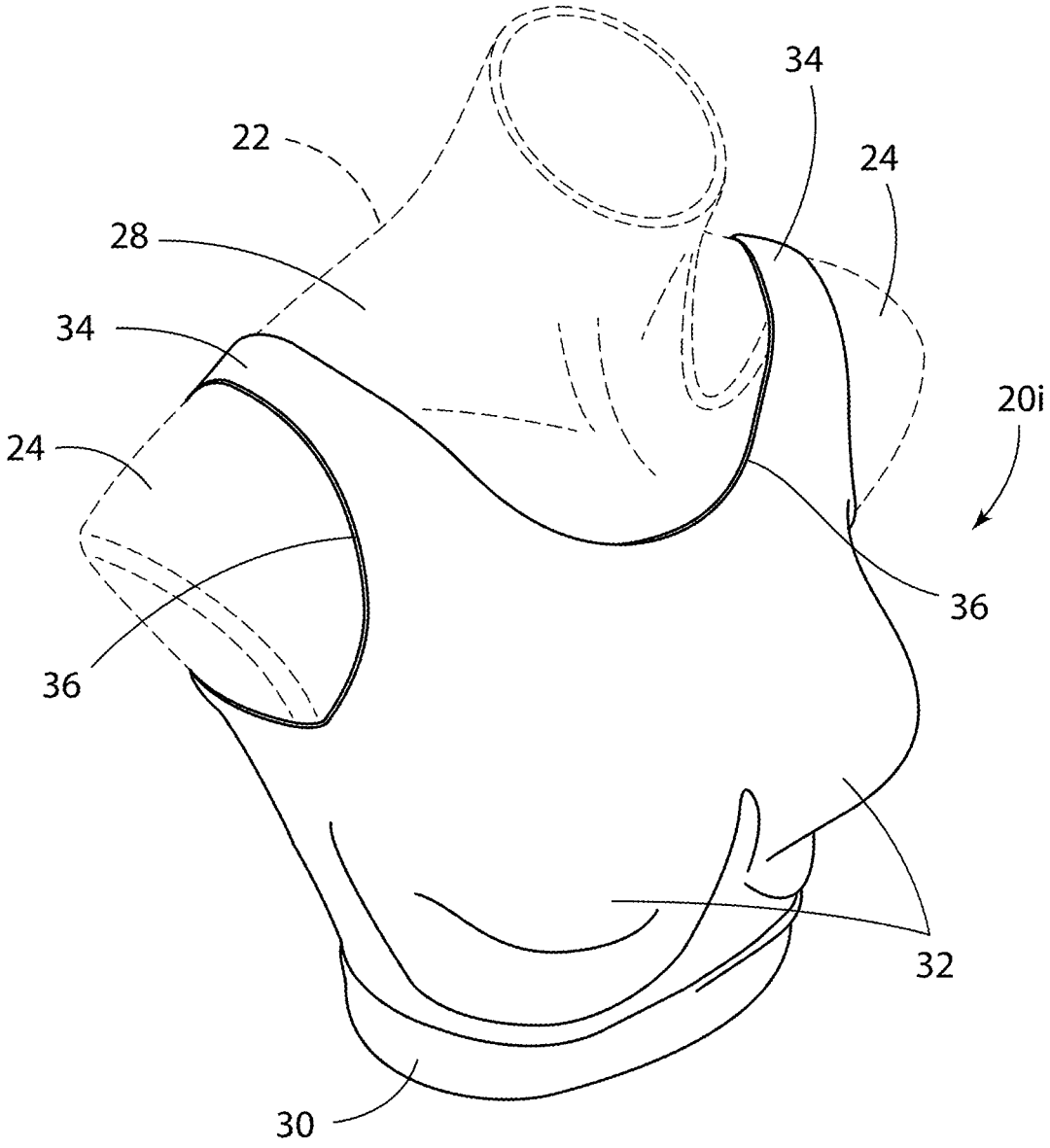

FIG. 9

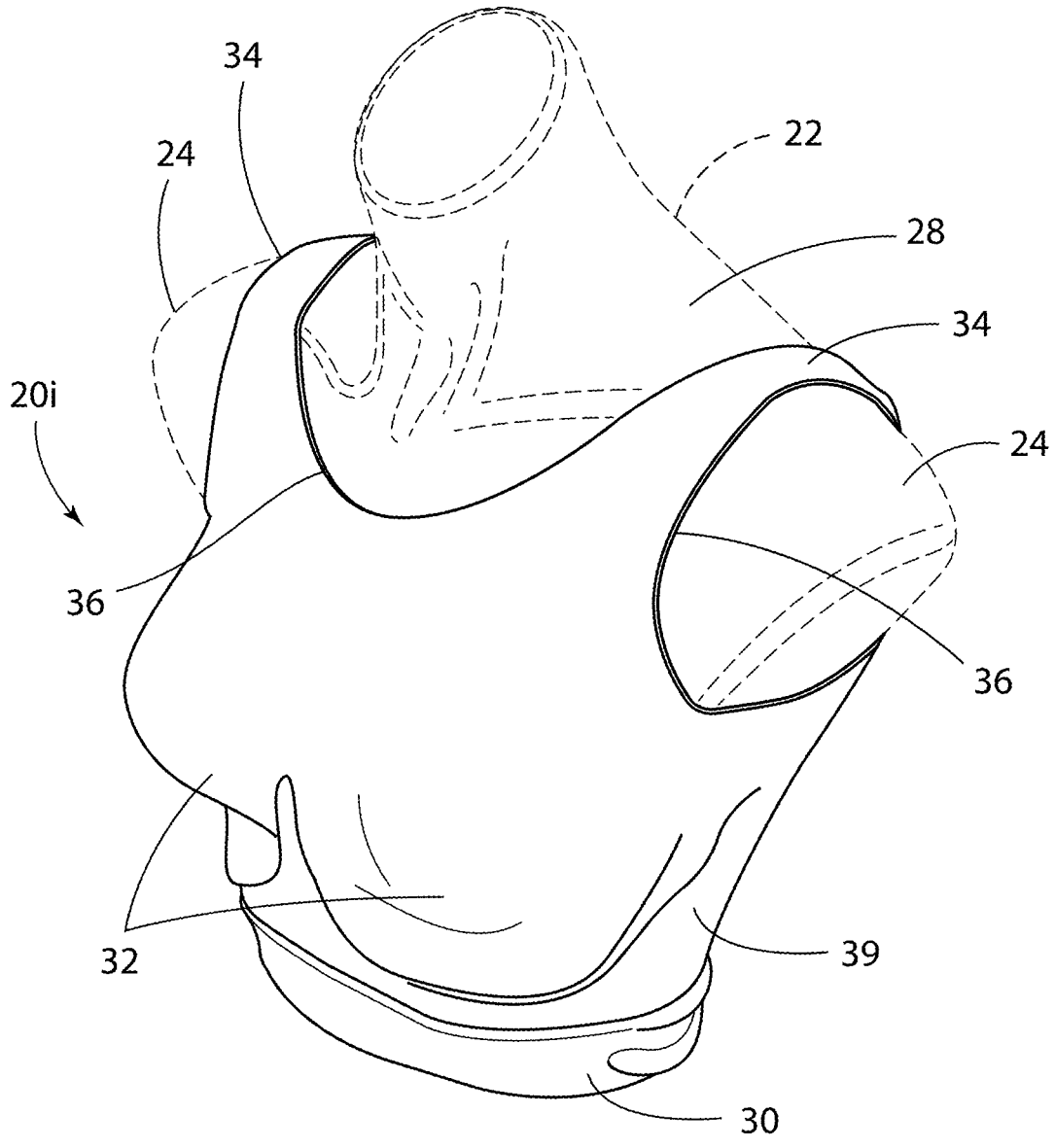

FIG. 10

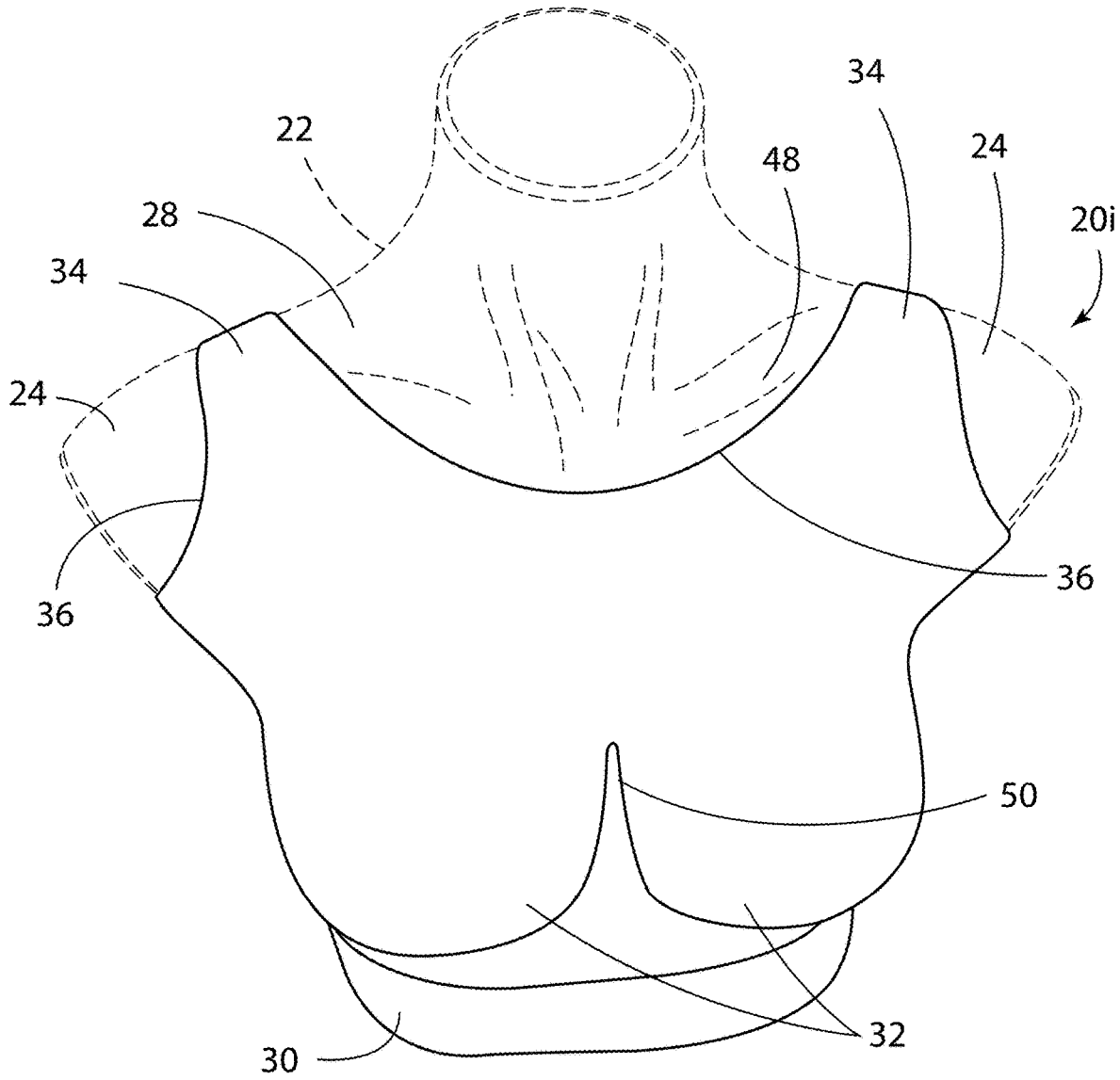

FIG. 11

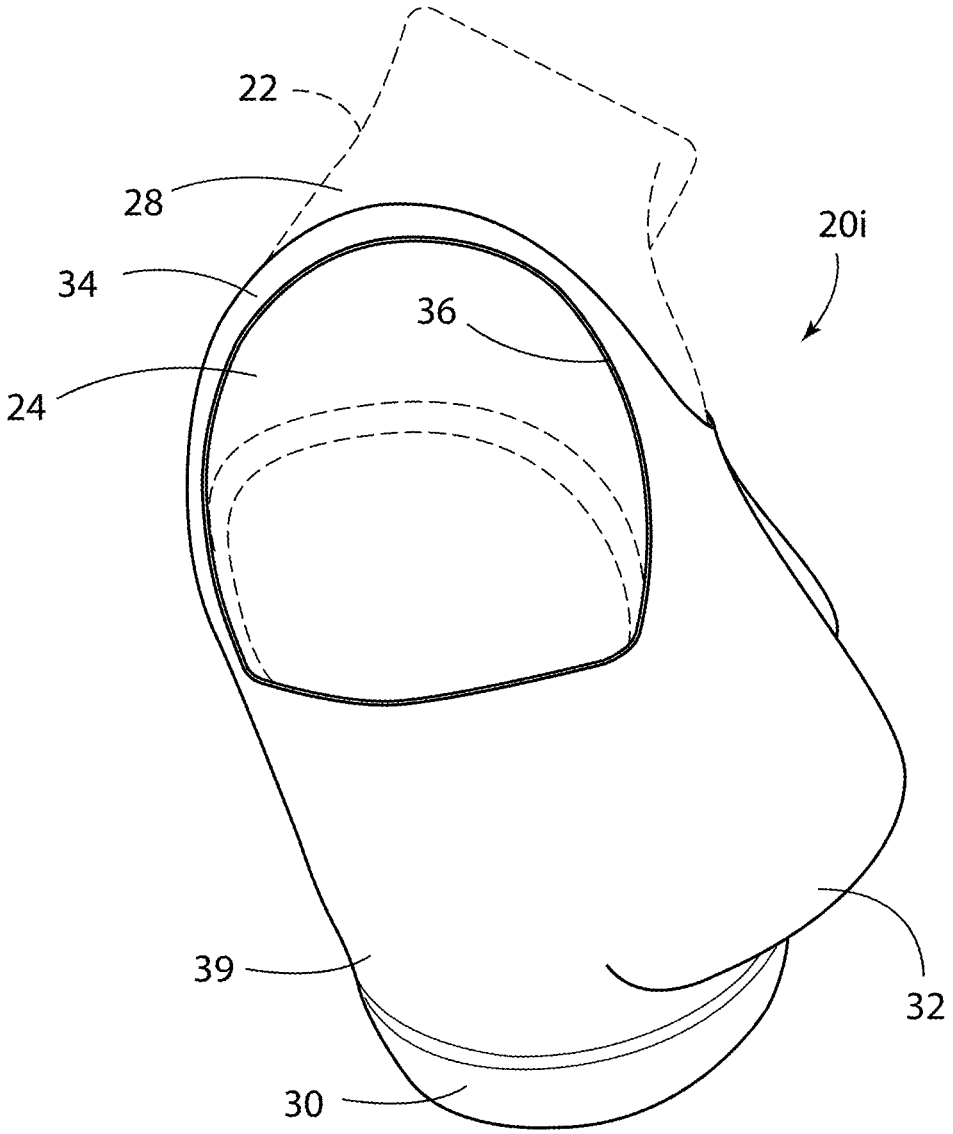

FIG. 12

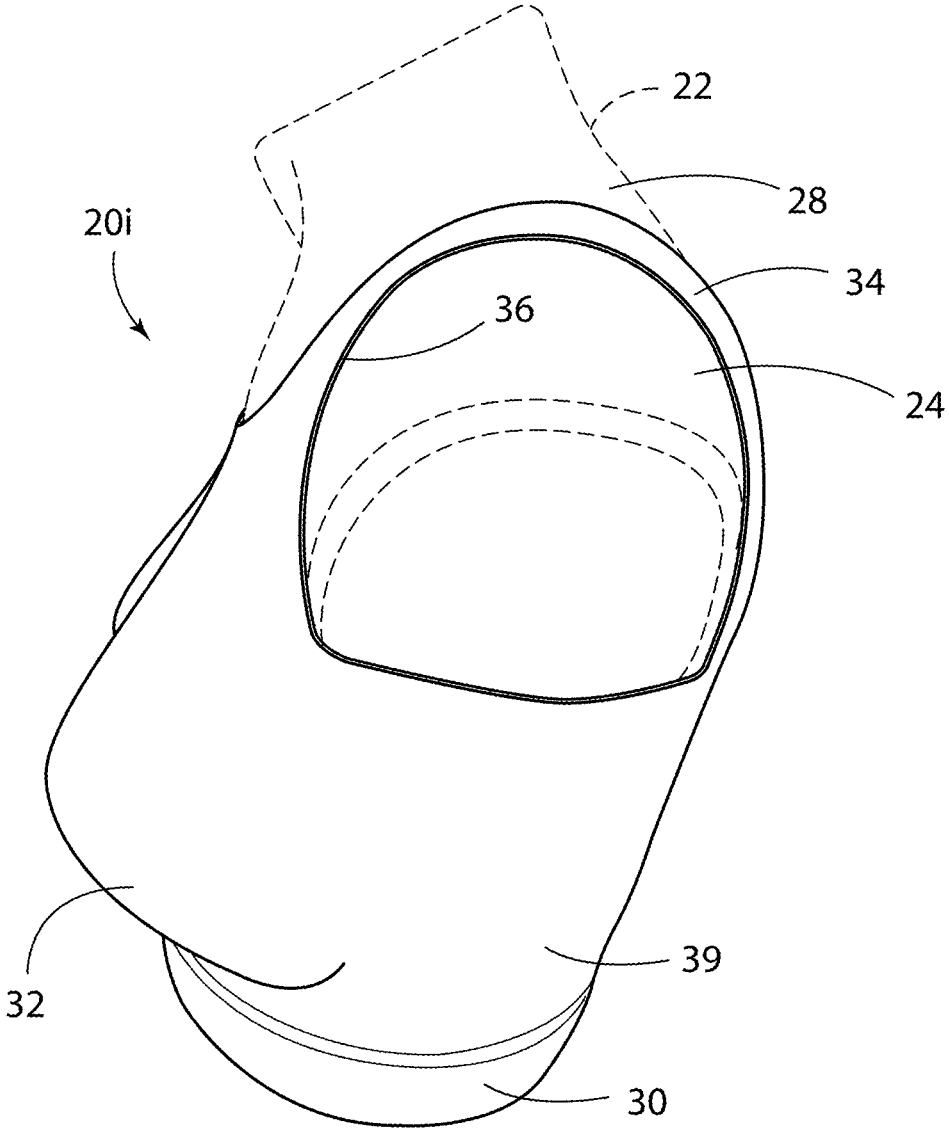

FIG. 13

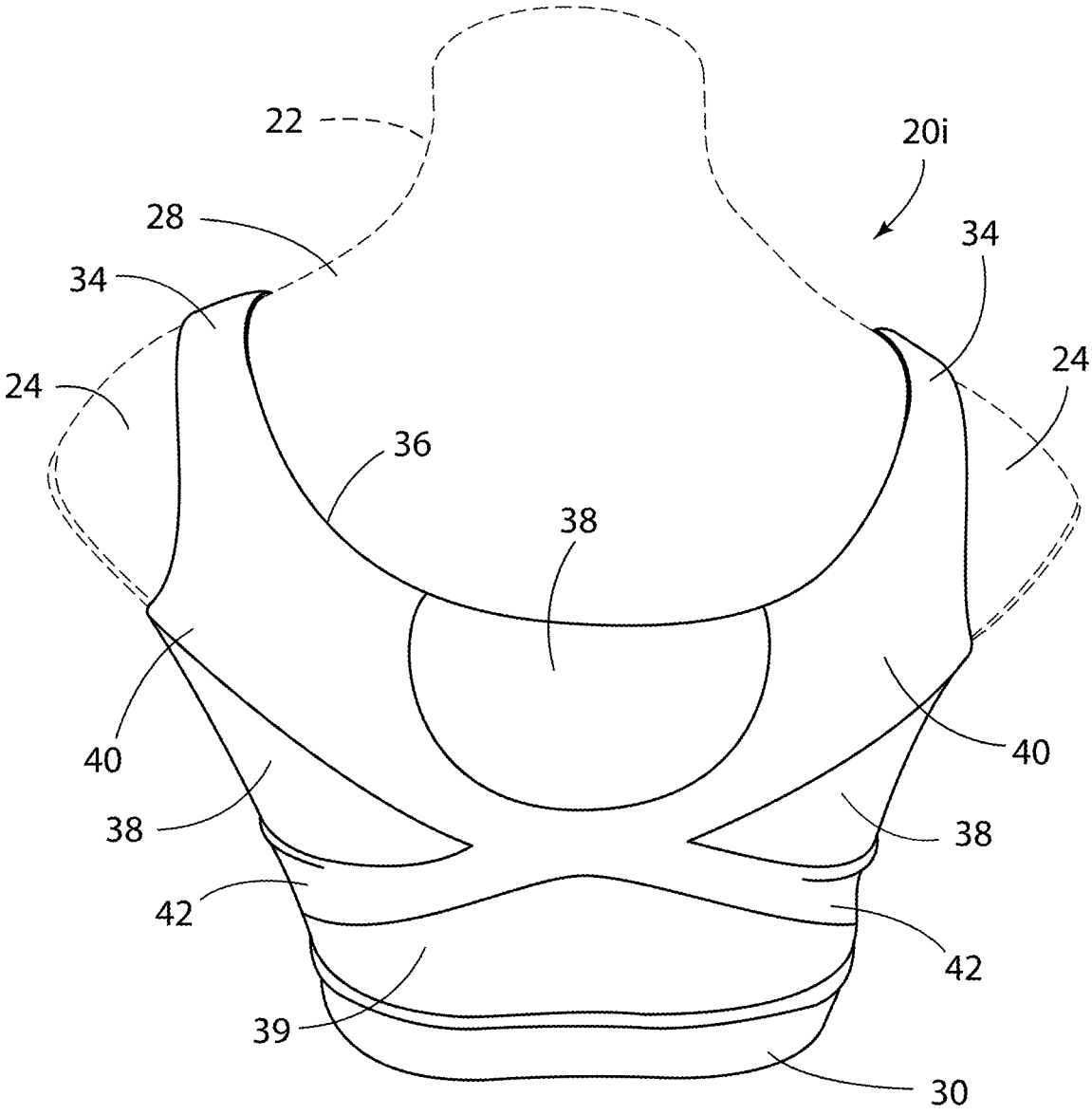

FIG. 14

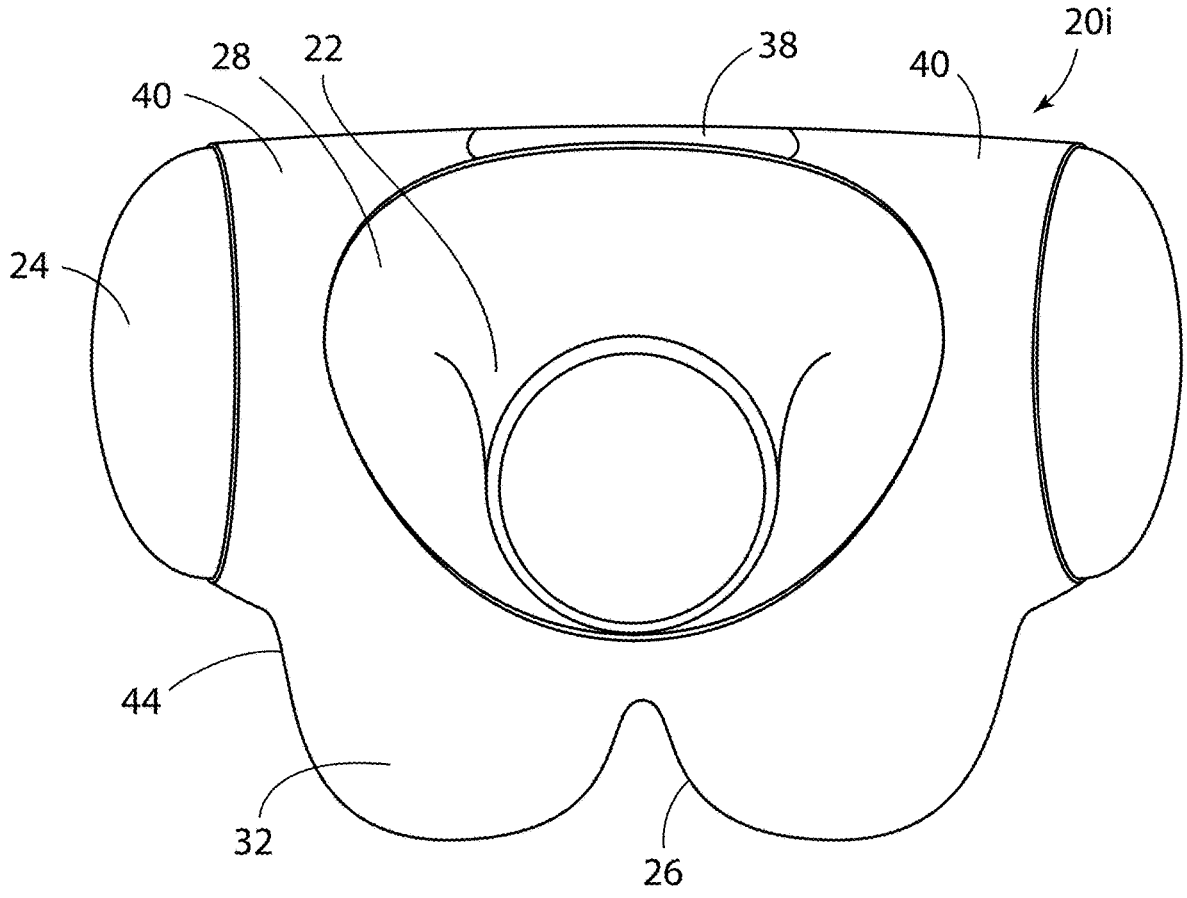

FIG. 15

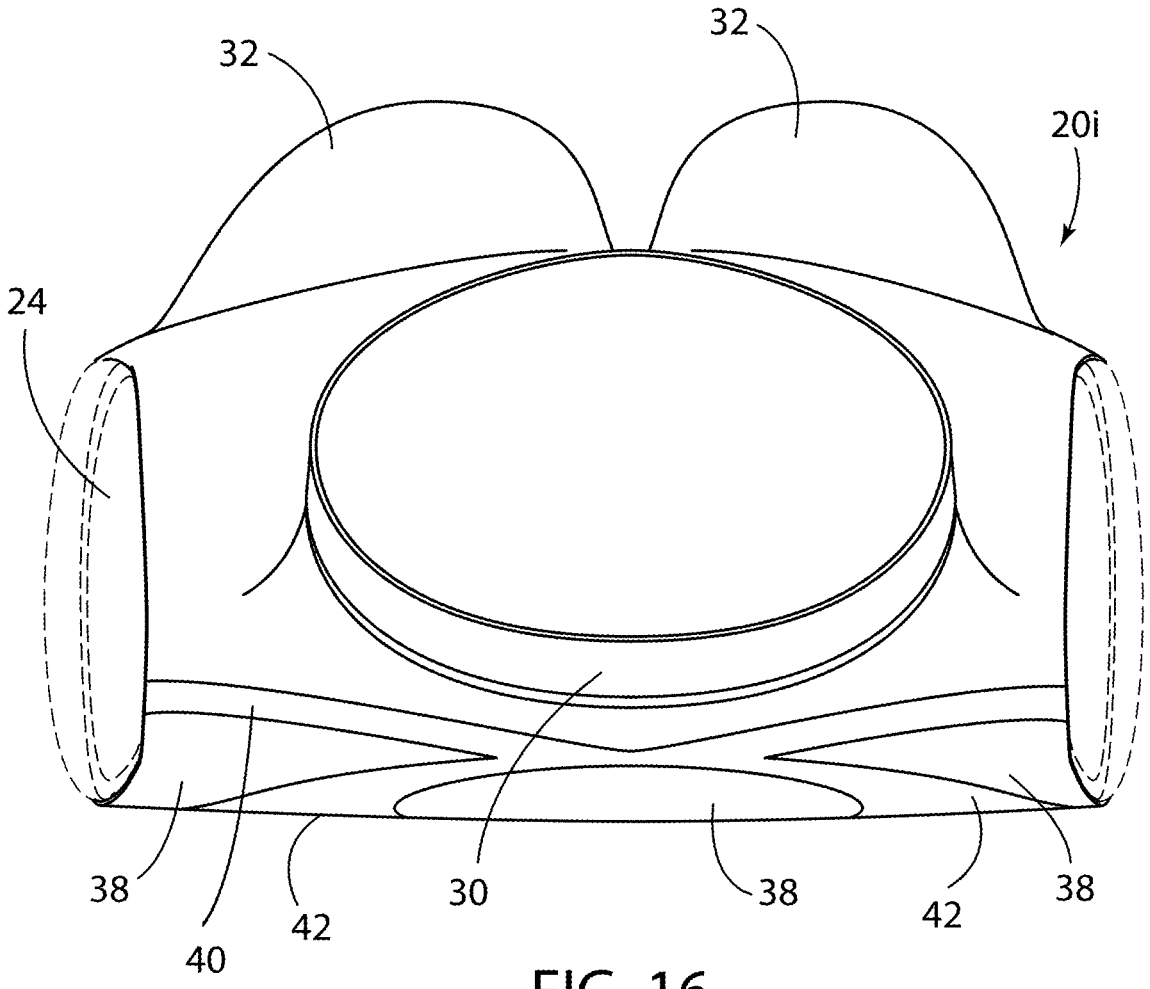

FIG. 16

SUPPORT GARMENTS

FIELD

[0001] Presented herein are support garments and more particularly support garments configured for a person undergoing breast treatments.

BACKGROUND

[0002] Unless otherwise indicated herein, the materials described in this section are not prior art to the claims and are not admitted as being prior art by inclusion in this section.

[0003] Treatment of breast cancer is typically surgical excision, chemotherapy or radiation therapy of a cancerous mass; use of anti-cancer agents and anti-estrogens; and the like and combinations thereof. There are two types of surgery: breast-conserving surgery that removes only the mass, and mastectomy surgery that removes the breast partially or completely.

[0004] Breast cancer treatments often have deleterious effects on the body. Often, patients or survivors will endure skin peeling, discomfort, and swelling around and within the breast tissue. Patients may have radiation "burns" beneath or around the breast and within the axilla. Also, they may have soreness, irritation, peeling, and burning of the nipple and areola. Finally, patients may have lasting heaviness and soreness of the breast from acute and chronic swelling, which may last from 6 weeks to 5 years after treatment.

[0005] A breast support garment (e.g., support garment, bra or brassiere) is generally an undergarment worn on the chest, is mainly used to not only support the breast, but also to shape the bust and prevent its shape from collapsing. A wide variety of such support garments are known with various colors, designs and materials have been commercialized.

[0006] In the art of breast support garments for breast cancer patients, restoring the bulge of the bust is one of the major objectives using materials such as silicone, urethane, cloth, cotton, beads, red beans, etc., and even pockets to insert and insert pads. Breast support garments for breast cancer patients have also attempted designs to increase comfort, ease of use, and function to a person who is battling cancer. However, in general, the available garments have not kept pace with advancements in breast cancer treatment technologies and practices. Due to advances in surgery and radiation, treatment techniques and early detection, more and more women are being treated with lumpectomy and radiation therapy instead of a mastectomy. Radiation therapy still typically causes significant irritation of the skin in the treated area. The skin may feel raw, blistered, tender, and sensitive to touch, rubbing, movement, or stretching.

[0007] Attempts have been made in the art to address these issues. In one attempt, the support garment is shaped for displacing an unaffected breast of a patient out of a radiotherapy treatment field (See generally, WO2015013806A1 to RAFFIS). In another attempt, a post-surgery support garment includes apertures appropriately sited to accommodate tubes from treatment devices (See, U.S. Pat. No. 9,545,124B1 to THOMPSON). In another attempt, an attachment component configured to removably couple an insert to the inner layer of a support garment is provided (See generally, US20180014579A1 to GUMLAW).

[0008] Despite these advances in the art, support garments are not known to focus on the needs early-stage breast cancer patients (or non-surgery treatment regiments). That is, many focus on prosthetics, cancer treatment tubes, nursing, etc. Further, many such support garments in the art have not evolved to meet new construction and manufacturing technologies. Sports bras do not provide a useful solution as their design focuses on hold or compression of muscles. Similarly, leisure bras that focus on softness, leave many other requirements unsatisfied for a support garment of this type.

[0009] There is thus a desire and a need in the art for improved support garment configurations and particularly a need in the art for improved support garment configurations for persons undergoing surgical breast cancer treatment, particularly radiation therapy, or pre- or post-surgery recovery.

SUMMARY

[0010] Accordingly, to advance at least the aforementioned deficiencies in the art, described herein are support garments and more particularly breast support garments that provide comfort, functional support, and therapeutic effect. In addition, the present garments are designed to be attractive and vogue, with positive affirmation. The present garment configurations are produced sustainably with methods and materials to minimize cost and adverse effects to the wearer and on the environment, while evolving to incorporate advancements in fiber, yarn and fabric performance. These include seamless knitting technologies and minimizing cut and sew methods. The present support garments may be particularly advantageous for persons undergoing pre- or -post cancer therapy, or other treatments or procedures involving the breast.

[0011] According to one approach, a seamless support garment configured for use by a person, for example, pre or post breast cancer therapy is provided. The garment may have first and second arm openings configured to be about 0.5 to 1 times greater than a diameter of an average user's arms; a neck opening configured to be about 2 to 4 times greater than a diameter of an average user's neck; a portion of the arm openings and neck opening opposite each other form integral shoulder straps; a band configured to fit at an under bust of the user defining a torso opening; two cup regions positioned above the band to receive the user's breasts, two cup regions positioned above the band to receive the user's breasts, the cup regions being 100-200 percent thicker at a portion of the cup configured for placement of the user's nipple and tapering to a garment body thickness as the taper extends away from the nipple portion; wherein, the support garment is configured from a material having between 50-200 percent elasticity.

[0012] According to one approach, the garment may further comprise a front closure positioned between the cups of the garments selected from the group consisting of zippers, buttons, hook and loop fasteners, magnets and combinations thereof.

[0013] According to one approach, the garment material may be selected from the list consisting of elastic fibers, hypoallergenic yarns, fiber, materials made from acrylic, microfiber, microfiber, linen, hemp, bamboo, flax, neoprene, and combinations thereof.

[0014] According to one approach, the garment elasticity may be achieved by elastic fibers comprising elastane or

polyether-polyurea copolymer material in the range of 20-100 percent of total composition volume.

[0015] According to one approach, the garment may the support garment may be composed of 40-80 percent bamboo viscose.

[0016] According to one approach, the support garment neck opening may be configured to extend up to the user's clavicular region.

[0017] According to one approach, the support garment may further comprise a second layer composed of silk or satin.

[0018] According to one approach, the support garment middle area is configured to separate each breast region by the cups while maintaining direct or close contact with the user. The direct or close contact with the user in the middle area may be achieved by at least one of knitting construction, padding, pleating, rouching and cushions.

[0019] According to one approach, the support garment material may be selected from the list consisting of anti-bacterial or antimicrobial materials, polyester, polyester-vinyl composites, vinyl, acrylics, linen, merino wool, hemp, anti-moisture, moisture wicking, breathable fabrics, polyester, polypropylene, merino wool, wool, nylon, micromodal, bamboo, and combinations thereof.

[0020] According to one approach, the garment may be impregnated or coated in materials selected for properties selected from the group: cooling, anti-burning, anti-itch, radiation blocking, anti-radio frequency (RF) radiation blocking, electric and magnetic fields (EMFs) blocking, ultraviolet radiation blocking, and combinations thereof.

[0021] According to one approach, the support garment material may comprise an EMF blocking and radiation blocking material having 2-15 percent by total composition weight silver fiber and 2-15 percent total composition weight hydrocortisone anti-itch cooling gel coatings.

[0022] A method of making a seamless support garment of the present embodiments may include one of the steps of: 3-D printing; sewing; circular knitting; flat knitting and bonding techniques.

[0023] According to another approach, a support garment may have first and second arm openings; a neck opening; two cup regions to receive a user's breasts, wherein the garment is impregnated or coated in materials selected for properties selected from the group: cooling, anti-burning and anti-itch, radiation block, anti-radio frequency (RF) radiation blocking, electric and magnetic fields (EMFs) blocking, ultraviolet radiation blocking, and combinations thereof. The garment material may have an EMF blocking and radiation blocking material or similar yarn or composites having 2-15 percent by total composition weight silver fiber and 2-15 percent total composition weight hydrocortisone anti-itch cooling gel coatings.

[0024] Other features will become more apparent to persons having ordinary skill in the art to which the processes and methods pertain and from the following description and claims.

BRIEF DESCRIPTION OF THE DRAWINGS

[0025] The present embodiments, as well as a non-limiting exemplary mode of use, further objectives and advantages thereof, will best be understood by reference to the following detailed description of an illustrative embodiment when read in conjunction with the accompanying drawings, wherein:

[0026] FIG. **1** illustrates a top left perspective view according to one approach of the present support garment embodiments;

[0027] FIG. **2** illustrates a top right perspective view of the support garment of FIG. **1**;

[0028] FIG. **3** illustrates a front view of the support garment of FIG. **1** with optional zipper;

[0029] FIG. **4** illustrates a right side elevational view of the support garment of FIG. **1**;

[0030] FIG. **5** illustrates left side elevational view of the support garment of FIG. **1**;

[0031] FIG. **6** illustrates a rear view of the support garment of FIG. **1**;

[0032] FIG. **7** illustrates a top view of the support garment of FIG. **1**;

[0033] FIG. **8** illustrates a bottom view of the support garment of FIG. **1**;

[0034] FIG. **9** illustrates a top left perspective view according to another approach of the present support garment embodiments;

[0035] FIG. **10** illustrates a top right perspective view of the support garment of FIG. **9**;

[0036] FIG. **11** illustrates a front view of the support garment of FIG. **9**;

[0037] FIG. **12** illustrates a right side elevational view of the support garment of FIG. **9**;

[0038] FIG. **13** illustrates left side elevational view of the support garment of FIG. **9**;

[0039] FIG. **14** illustrates a rear view of the support garment of FIG. **9**;

[0040] FIG. **15** illustrates a top view of the support garment of FIG. **9**; and

[0041] FIG. **16** illustrates a bottom view of the support garment of FIG. **9**.

[0042] Corresponding reference characters may indicate corresponding components throughout the several views of the drawings. Skilled artisans will appreciate that elements in the figures are illustrated for simplicity and clarity and have not necessarily been drawn to scale. For example, the dimensions of some of the elements in the figures may be exaggerated relative to other elements to help to improve understanding of various embodiments of the present invention. Also, common but well-understood elements that are useful or necessary in a commercially feasible embodiment are often not depicted in order to facilitate a less obstructed view of these various embodiments of the present embodiments.

[0043] While the features described herein may be susceptible to various modifications and alternative forms, specific embodiments thereof are shown by way of example in the drawings and are herein described in detail. It should be understood, however, that the drawings and detailed description thereto are not intended to be limiting to the particular form disclosed, but on the contrary, the intention is to cover all modifications, equivalents and alternatives falling within the spirit and scope of the subject matter as defined by the appended claims.

DETAILED DESCRIPTION

[0044] Accordingly, to advance at least the aforementioned deficiencies in the art, described herein are support garments and more particularly breast support garments that provide comfort, functional support, and therapeutic effect. In addition, the present garments are designed to be attrac-

tive and vogue, with positive affirmation. The present garment configurations are produced sustainably with methods and materials to minimize cost and adverse effects to the wearer and on the environment, while evolving to incorporate advancements in fiber, yarn and fabric performance. These include seamless knitting technologies and minimizing cut and sew methods. The present garment configurations also may include materials to shield the user from various types of radiation, and provide heeling and comforting materials such as anti-septics, anti-microbials, water wicking, and anti-burn/itch.

[0045] Shown in FIGS. **1-16** are two exemplary embodiments of the present support garments as described herein. Garment **20** (FIGS. **1-8**) and alternate embodiment **20***i* (FIGS. **9-16**) can be worn by a person **22** and may have arm openings **24**, head opening **28**, under bust band portion **30**, cup portions **32**, shoulder straps **34**, seam edges **36**, medial back portions **38** (See FIG. **6**) which may be made of a looser or different construction to allow more air ventilation, upper back strap **40**, lower back strap **42**. Support garment may also have cup rouching (or pleating) **26** and side pleating or rouching **44** which is designed to support breasts. The band portion **30** may be up to twice the thickness of the portion of the garment adjacent to the band portion. It is noted that panels **38** represent one potential embodiment but that many other looser knit panels, designs and configurations are possible within the scope of the present invention. Portion **39** of garment **20**, **20***i* is configured to provide an additional under breast support and may also be formed of a breathable fabric.

[0046] The fabric support garments **20**, **20***i* may be made from a small, fine, flexible fabric, fiber, cloth or textile that can be smooth, pleated, rouched or textured, unscented or scented (such as therapeutic, lavender, chamomile, tea tree), one or more colors, solid or printed, accomplished through yarns, knitting, manufacturing processes, 3-D printing, weaving, and/or various garment printing techniques (such as color or pattern) and coating.

[0047] Middle breast region (e.g., cup **32**) construction may provide extra coverage for comfort and concealment of the breast nipples, without requiring the use of bra pads or padding used in sports and other bras. This will be accomplished through knitting construction techniques, including use of yarn, fabric, and knitting stitches. Such construction may include an increased thickness in the cup region that is 50-200 percent thicker (preferably 100-200 percent thicker) than the other regions of support garment **20**, **20***i*, surrounding the cup region **32**. In one approach, the two cup regions are positioned above the band to receive the user's breasts, the cup regions being 100-200 percent thicker at a portion of the cup configured for placement of the user's nipple and tapering to a garment body thickness as the taper extends away from the nipple portion.

[0048] Arm openings **24**, band **30** and neck opening **28** are configured to provide convenient ease of entry. For example, the neck opening **28** may be configured to be about 200 or 400 percent greater than (2 to 4 times greater than) the diameter of an average user **22**'s neck (e.g., using an average neck diameter of 4-6 inches). The arm openings **24** may be configured to be about 50 to 100 percent greater (i.e., 0.5 to 1 times greater) than the diameter of an average user **22**'s arms at the bicep (e.g., using an average bicep diameter of 3 to 5 inches). These configurations minimize friction against breast region and/or use of the arm and achieved by various materials such as yarn, fabric, knitting stitches and the like. These materials may provide for stretch and recovery/elasticity (e.g., the ability of an object or material to resume its normal shape after being stretched or compressed) of between 50-200 percent elasticity (i.e., the material may be stretched to 50-300 percent greater than its normal size). This elasticity allows a wearer to pull on the support garment overhead or to step into the garment. Elastic fibers may include such fibers as elastane fibers, polyether-polyurea copolymer material, and those sold under the tradenames LYRCA and SPANDEX. The elasticity may be achieved by elastic fibers comprising elastane or polyether-polyurea copolymer material in the range of 20-100 percent of total composition volume. In one embodiment, the composition of garment **20**, **20***i* may comprise 10-30% polyamide and about 5-20% elastane.

[0049] Garment **20**, **20***i* may be formed of material that is comfortable against the wearer's skin while providing support. Materials may include but is not limited to hypoallergenic yarns, fiber or other material made from elastane fibers, polyether-polyurea copolymer material, satin, silk, microtexture material, polyamide, acrylic, microfiber, linen, cotton, bamboo fiber fabric (bamboo viscose), hemp, flax, neoprene and combinations thereof. The materials may include a ribbed microtexture material. In one embodiment, the composition of garment **20**, **20***i* material may comprise about 40-80 percent bamboo viscose.

[0050] The garment may have an optional front closure to further facilitate ease of use and placement. Such closures and fasteners may include zippers **46** (See FIG. **3**), buttons, hook and loop fasteners, magnets, combinations thereof and the like. It is noted that the closures may be applied to the front, the back and the front and the back.

[0051] The construction of garment **20**, **20***i* is configured to alleviate pain or pressure in sensitive areas, including but not limited to the breast region, under arm, and incisions in the breast region. This is achieved through garment design (including higher neckline and underarm), knitting technique around sensitive spots, including surgery incisions, breast nipples, lymph nodes, and neckline). The neck opening as shown is configured to extend up to the user's clavicular region **48** (i.e., near the clavicle bone).

[0052] The present garments **20**, **20***i* may have a single body layer, although a second layer or pocket may be added. The second layer may from soothing comfort such as an inner layer of silk or satin.

[0053] Middle area **50** of garment **20**, **20***i* (See e.g., FIGS. **1** and **3**) is configured to separate each breast region while maintaining contact directly or closely with the skin achieved through knitting construction, padding, cushions.

[0054] Band **30** is the bottom area of garment **20**, **20***i* is configured to be seamless, provides support and lift, and eliminates skin-on-skin contact, particularly for large, heavy breast regions achieved through knitting construction, padding, cushions.

[0055] In some embodiments of garment **20**, **20***i* may have a functional trim edge **36** around the top edge or the garment (the neck and arm holes), although other knitting or finishing techniques may be used.

[0056] Materials are selected for garment **20**, **20***i* to optimize breathability or cool feeling material to keep the breast regions dry and cool. This may be accomplished through knitting construction, fabric or yarn selection. Care is taken for the cups not to compress the breast area.

[0057] The present embodiments are an advance in the art. For example, while many leisure or comfort bras on the market focus on softness, many contain narrow or thin straps or provide lower neckline (including deep V neck, scoop neck, providing exposure of portions of the breast region.

[0058] The present embodiments may contain additional breast nipple protection or coverage through knitting construction, additional bra layer or other mechanism attached to the bra. This is to minimize chafing, nipple prominence visible to others, and irritation. It is noted that the additional nipple protection referenced herein may be applied to not only the present embodiments, but is configured to be applied to any such support garments.

[0059] In some embodiments support garment **20**, **20***i* may be formed of material that contains a healing effect such as, but not limited to, aloe, anti-bacterial or antimicrobial and may also include but is not limited to polyester, polyester-vinyl composites, vinyl, acrylics, linen (which may add an additional antimicrobial effect), merino wool, and hemp or anti-moisture including moisture wicking or breathable fabrics including but not limited to polyester, polypropylene, merino wool, wool, nylon, micromodal and bamboo. This may also be achieved through yarn selection or coating or finishing processes.

[0060] Shoulder straps are integral with the body layer of the support garment of the same material. This leverages modern knitting technology capability and differs from many leisure bras that have thin bra straps attached typically through cut and sew methods.

[0061] Support garment **20**, **20***i* construction may be configured to leverage knitting technologies that minimize cut and sew techniques. This reduces/eliminates offcuts thrown away during production of such garments. Seamless construction using 3-D printing, sewing, circular knitting, flat knitting, and bonding techniques, with no side seams or bottom seams, although minimal cut and sewing may be used.

[0062] Other materials and considerations for the present embodiments are presented. Such considerations may include forming the garment of material(s) that contain cooling, anti-itching or anti-burning ointments, properties, or effect. In some embodiments, the garment materials may include properties that repels ointments, gels, lotions or other topical treatment products. In some embodiments, the garment materials may include anti-radiation or other protective attributes, to reduce exposure to radio frequency (RF) radiation, electric and magnetic fields (EMFs), ultraviolet radiation. This can be achieved through various methods, including but not limited to conductive textiles, yarns, coating and finishing techniques or garment construction. In short, of the above may be achieved through yarn containing or coated or impregnated with these specified properties, coating or finishing techniques or other aids incorporated into the fabric.

[0063] For example, breathable fabrics may include various combinations of cotton, polyester, nylon, rayon, linen, silk, micromodal, merino wool, chambray, and those sold under the name GORTEX. Moisture wicking materials may include various combinations of Polyester, Polypropylene, Merino Wool, wool, nylon, micromodal or bamboo. Cooling, anti-itch and anti-burn materials may hydrocortisone anti-itch cooling gels. Topical ointments, creams and antiseptics may also be coated on the garment materials. EMF and radiation protective materials may include EMF shielding silver fabric, yarn or materials; conductive CuNi cloth, material or yarn.

[0064] According to one approach, a support garment of any type, including the present embodiments may be impregnated or coated in materials selected for properties selected from the group: cooling, anti-burning and anti-itch, anti-radiation, anti-radio frequency (RF) radiation blocking, electric and magnetic fields (EMFs) blocking, ultraviolet radiation blocking, and combinations thereof. In a non-limiting example, in one approach the garment material may include an EMF blocking and radiation blocking material, yarn or composite. By way of a non-limiting example, in one approach the EMF blocking and radiation blocking material, yarn or composite may have 2-15 percent by total composition weight silver fiber and 2-15 percent total composition weight hydrocortisone anti-itch cooling gel coatings.

[0065] While the embodiments have been described in conjunction with specific embodiments, it is evident that many alternatives, modifications and variations will be apparent to those skilled in the art in light of the foregoing description. Accordingly, the present embodiments attempt to embrace all such alternatives, modifications and variations that fall within the spirit and scope of the appended claims. Throughout this specification and the drawings and figures associated with this specification, numerical labels of previously shown or discussed features may be reused in another drawing figure to indicate similar features.

LIST OF REFERENCE NUMBERS

[0066] **20** support garment
[0067] **22** person
[0068] **24** arm opening
[0069] **26** cup pleating/rouching
[0070] **28** head opening
[0071] **30** under bust band portion
[0072] **32** cup portions
[0073] **34** shoulder straps
[0074] **36** seam edges
[0075] **38** back portion ventilation panels
[0076] **39** torso support band
[0077] **40** upper back strap
[0078] **42** lower back strap
[0079] **44** side pleating/rouching
[0080] **46** front closure
[0081] **48** clavicular region
[0082] **50** middle area between cups

I claim:

1. A seamless support garment configured for use by a person, the garment comprising:

first and second arm openings configured to be about 0.5 to 1 times greater than a diameter of an average user's arms;

a neck opening configured to be about 2 to 4 times greater than a diameter of an average user's neck;

a portion of the arm openings and neck opening opposite each other form integral shoulder straps;

a band configured to fit at an under bust of the user defining a torso opening;

two cup regions positioned above the band to receive the user's breasts, the cup regions being 100-200 percent thicker at a portion of the cup configured for placement

of the user's nipple and tapering to a garment body thickness as the taper extends away from the nipple portion;

wherein, the support garment is configured from a material having between 50-200 percent elasticity.

2. The support garment of claim **1**, further comprising a front closure positioned between the cups of the garments selected from the group consisting of zippers, buttons, hook and loop fasteners, magnets and combinations thereof.

3. The support garment of claim **1**, wherein the garment material is selected from the list consisting of elastic fibers, hypoallergenic yarns, fiber, materials made from acrylic, microfiber, microfiber, linen, hemp, bamboo, flax, neoprene, and combinations thereof.

4. The support garment of claim **3**, wherein the elasticity is achieved by elastic fibers comprising elastane or polyether-polyurea copolymer material in the range of 20-100 percent of total composition volume.

5. The support garment of claim **3**, wherein the garment comprises 40-80 percent bamboo viscose.

6. The support garment of claim **1**, wherein the neck opening is configured to extend up to the user's clavicular region.

7. The support garment of claim **1**, further comprising second layer composed of silk or satin.

8. The support garment of claim **1**, wherein a middle area is configured to separate each breast region by the cups while maintaining direct or close contact with the user.

9. The support garment of claim **8**, wherein the direct or close contact with the user in the middle area is achieved by at least one of knitting construction, padding, pleating, rouching and cushions.

10. The support garment of claim **1**, wherein the garment material is selected from the list consisting of anti-bacterial or antimicrobial materials, polyester, polyester-vinyl composites, vinyl, acrylics, linen, merino wool, hemp, anti-moisture, moisture wicking, breathable fabrics, polyester, polypropylene, merino wool, wool, nylon, micromodal, bamboo, and combinations thereof.

11. The support garment of claim **1**, wherein the garment is impregnated or coated in materials selected for properties selected from the group: cooling, anti-burning, anti-itch, radiation blocking, anti-radio frequency (RF) radiation blocking, electric and magnetic fields (EMFs) blocking, ultraviolet radiation blocking, and combinations thereof.

12. The support garment of claim **11**, wherein the garment material comprises an EMF blocking and radiation blocking material having 2-15 percent by total composition weight silver fiber and 2-15 percent total composition weight hydrocortisone anti-itch cooling gel coatings.

13. A method of making a seamless support garment of claim **1**, comprising one of the steps of: 3-D printing; sewing; circular knitting, flat knitting; and bonding techniques.

14. A support garment, comprising:

first and second arm openings;

a neck opening;

two cup regions to receive a user's breasts,

wherein the garment is impregnated or coated in materials selected for properties selected from the group:

cooling, anti-burning and anti-itch, radiation block, anti-radio frequency (RF) radiation blocking, electric and magnetic fields (EMFs) blocking, ultraviolet radiation blocking, and combinations thereof.

15. The support garment of claim **14**, wherein the garment material comprises an EMF blocking and radiation blocking material or similar yarn or composites having 2-15 percent by total composition weight silver fiber and 2-15 percent total composition weight hydrocortisone anti-itch cooling gel coatings.

* * * * *