April 19, 1932. L. C. SMITH 1,854,232

GAS HEATER

Filed Feb. 10, 1930 2 Sheets-Sheet 1

Fig. 1

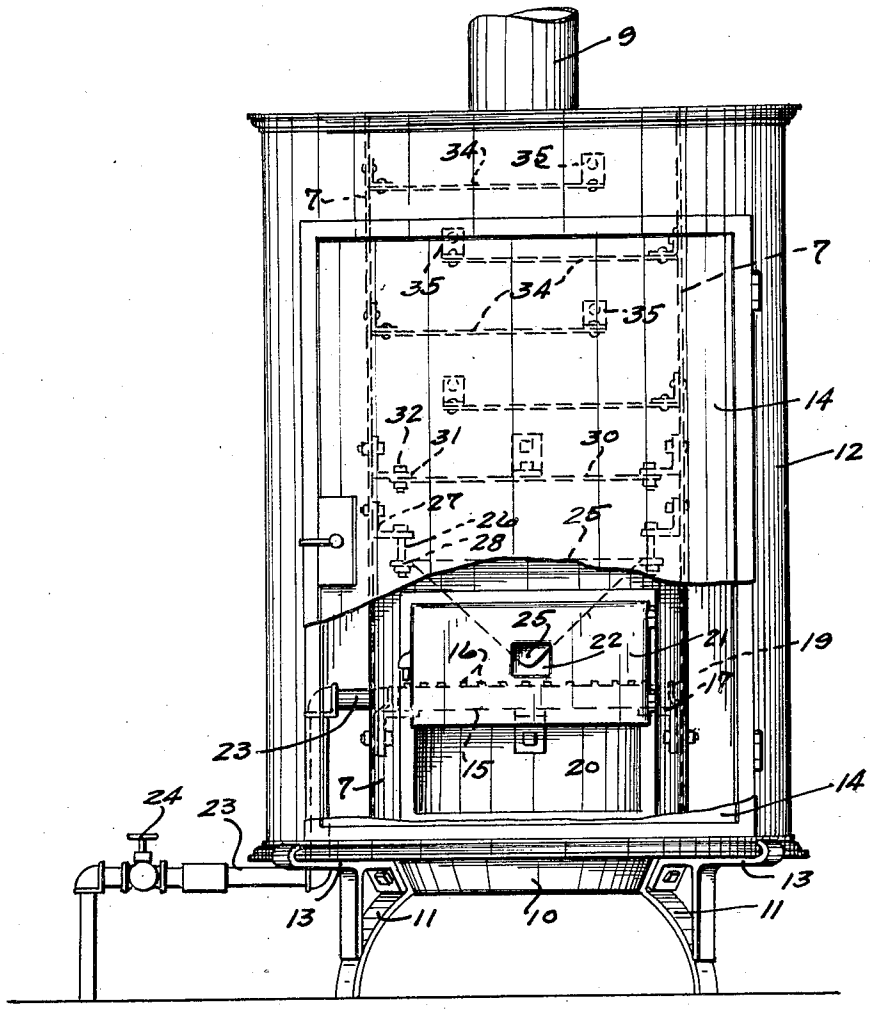

Inventor
Leo C. Smith
By his Attorneys
Merchant and Gifford

April 19, 1932. L. C. SMITH 1,854,232

GAS HEATER

Filed Feb. 10, 1930 2 Sheets-Sheet 2

Fig. 2

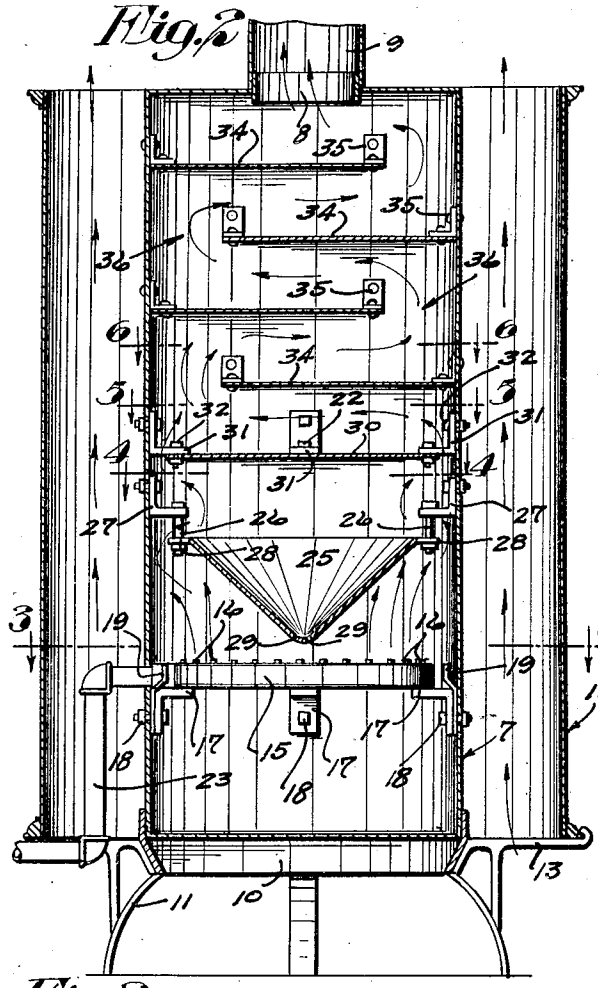

Fig. 6

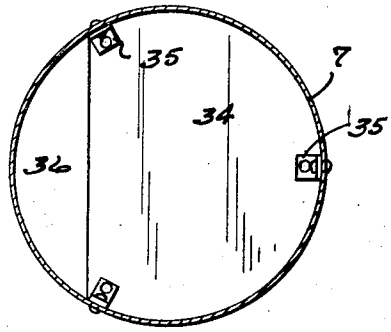

Fig. 5

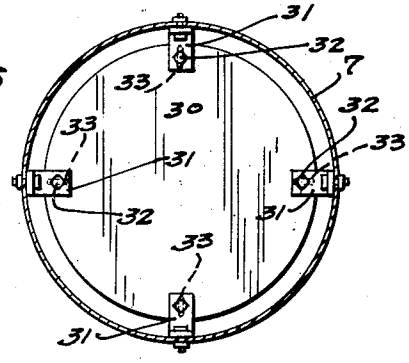

Fig. 4

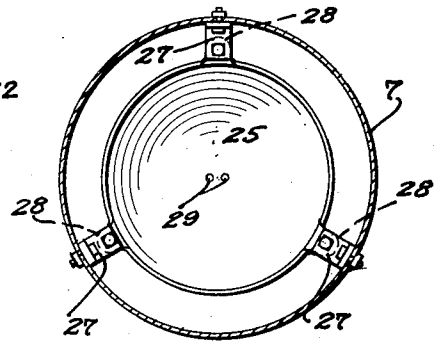

Fig. 3

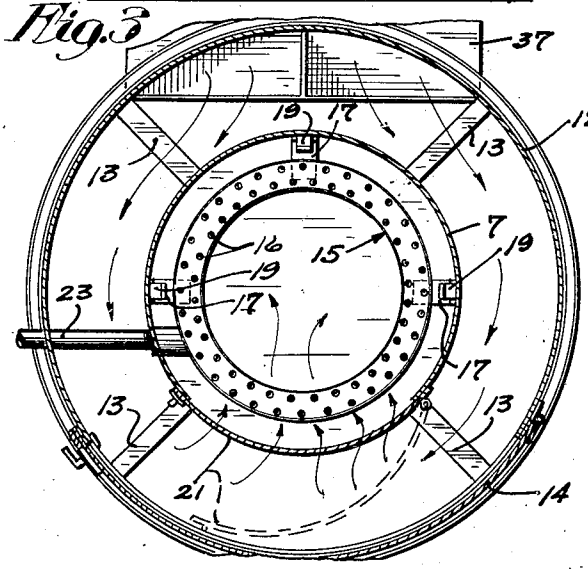

Inventor
Leo C. Smith
By his Attorneys
Merchant and Kissore

Patented Apr. 19, 1932 1,854,232

UNITED STATES PATENT OFFICE

LEO C. SMITH, OF MINNEAPOLIS, MINNESOTA, ASSIGNOR TO SMITH SYSTEM HEATING CO., OF MINNEAPOLIS, MINNESOTA, A CORPORATION OF MINNESOTA

GAS HEATER

Application filed February 10, 1930. Serial No. 427,222.

My present invention has for its object to provide an efficient, economical and safe gas heater intended for general use but especially designed for use in heating school rooms and the like.

To the above end, generally stated, the invention consists of the novel devices and combinations of devices hereinafter described and defined in the claims.

In the accompanying drawings, which illustrate the invention, like characters indicate like parts throughout the several views.

Referring to the drawings:

Fig. 1 is a front elevation of the improved heater with some parts broken away and with other parts indicated by broken lines;

Fig. 2 is a view principally in central transverse vertical section;

Fig. 3 is a horizontal section taken on the line 3—3 of Fig. 2; and

Figs. 4, 5 and 6 are detail views partly in plan and partly in horizontal section taken on the lines 4—4, 5—5 and 6—6, respectively, of Fig. 2.

The numeral 7 indicates an upright cylindrical shell having a closed bottom and top, the latter of which is provided with an axial vent or outlet 8 onto which the lower end of the smoke pipe 9 is telescoped and which pipe leads to a chimney, not shown.

This shell 7 is provided with an annular base 10 having four circumferentially spaced legs 11 which support said shell and base above the floor. Surrounding the shell 7 concentric therewith is a jacket or casing 12 that is open at its ends and radially spaced from said shell to leave an air space therebetween. This jacket 12 is supported on brackets 13 on the base 10 and legs 11 with its upper and lower ends substantially in the planes of the corresponding ends of the shell 7. In the front of the jacket 12 is a large door opening normally closed by a horizontal swinging door 14.

Within the shell 7 near the bottom thereof is a ring-like gas burner 15 which is substantially square in cross-section and has on its top a multiplicity of bossed gas escape holes 16. Said burner 15 loosely rests on four circumferentially spaced angle brackets 17 secured by nut-equipped bolts 18 to the shell 7. The diameter of the burner 15 is considerably less than the shell 7 and leaves an air passageway between said burner and shell. For holding the burner 15 substantially concentric with the shell 7 with freedom for a limited shifting movement thereon in a horizontal plane there are provided upstanding positioning fingers 19. The lower end portions of the fingers 19 extend between the shell 7 and brackets 17 and are held in position by the bolts 18. Said fingers 19 above the brackets 17 are laterally inset toward the burner 15 but are out of contact therewith to permit free expansion of said burner. In the front of the casing 7 is a door opening 20 which extends from the bottom of said shell to a point above the burner 15.

A door 21 hinged to the burner 15 normally closes the upper portion of the door opening 20 and its bottom is slightly below said burner. Formed in the door 21 at the center thereof is an opening 22 through which the burner 15 may be lighted. The bottom portion of the door opening 20 affords a constantly open air intake for the burner 15.

A gas supply pipe 23 leading from any suitable source of supply, not shown, extends under the jacket 12 at the left side thereof and its upper end is attached to the burner 15 and has communication therewith. Outward of the jacket 12 the gas supply pipe 23 is provided with a valve 24 by the use of which the supply of gas to the burner 15 may be regulated or entirely shutoff.

Above the burner 15 is a deflector 25 in the form of an inverted cone that is concentric with the shell 7 and its base is of a smaller diameter to leave an air passageway between said shell and deflector. This deflector 25 is loosely suspended by a plurality of nut-equipped bolts 26 from the shell 7 which loosely extend through holes in angle brackets 27 bolted to the shell 7 and lugs 28 formed with the base of the deflector 25. This method of suspending the deflector 25 from the shell 7 permits free expansion and contraction thereof. In the apex of the deflector 25 is, as shown, two air holes 29 for the passage of air into the deflector 25 to cause

gas collected in said deflector to burn. Vertically spaced above the distributor 25 is a spreader 30 in the form of a horizontal disc loosely held under a plurality of angle brackets 31 secured to the shell 7 by nut-equipped bolts 32 which loosely extend through radial slots 33 in the spreader 30 and brackets 31. By thus loosely suspending the spreader 30 from the shell 7 the same is free to expand and contract thus avoiding warping and buckling thereof.

Above the spreader 30 is a plurality of vertically spaced baffles 34 in the form of flat segmental plates the arcs of which closely engage the shell 7 and angle member 35 rigidly secure said baffles to the shell 7. These baffles 34 are arranged in the shell 7 with their chords parallel and alternately arranged on opposite sides of said shell. The space between the walls of the shell 7 and cords of the baffles 34 form vertically spaced passageways 36 alternately arranged on opposite sides of the shell 7 which cause the products of combustion to travel a long zigzag course in the shell 7 from one side to the other thereof between the baffles 34.

Fresh air from the outside of the building is conveyed through an intake conduit to the heater where the same is warmed as it travels upward between the shell 7 and jacket 12 and radiates in all directions into the room. The fresh air intake conduit is only fragmentarily illustrated and indicated by the numeral 37.

The flame burner gives maximum heat which is directed by the deflector 25 against the walls of the steel shell 7 by said deflector and the spreader 30. From the spreader 30 the heat travels the long course in the shell 7 formed by the baffles 34 which directs the heat alternately against opposite walls of the shell 7 in the passageway 36. At the top of the shell 7 the products of combustion pass through the outlet 8 to the smoke pipe 9 which conveys the same to the chimney and never into the room. Heat from the baffles 34 due to their contact with the shell 7 is transmitted to said shell where the same is radiated into the room. Due to the flame passageway in the shell 7 very little heat will escape through the outlet 8.

There will be no shortage of oxygen in the room as the "burned air" passes out through the chimney and warm fresh air is constantly taking its place. The door opening 20 below the door 21 is always open so that there will be an air supply to the gas burner 15 at all times and of the proper volume. This air from the door opening 20 passes upward through the annular burner 15 as well as between said burner and the walls of the shell 7.

The air drawn into the interior of the deflector 25 through the air holes 29 is for the purpose of combustion so that the gases as they accumulate in the deflector 25 are burned and thus prevent explosions.

The door opening 20 which is constantly open affords an efficient ventilator for the room as the draft produced in the heater by the heat from the burner draws the foul air from the floor and uses the same for the purpose of combustion. Fresh air to replace the foul air drawn from the room through the door opening 20 is replenished by a fresh air intake, not shown.

What I claim is:

1. A heater of the class described comprising a shell, a ring-like burner in the shell, a hollow inverted conical deflector over the burner, a disk-like spreader plate spaced above the deflector, said burner, deflector, and spreader plate being substantially axially aligned at the axis of the shell and spaced from the walls thereof to leave annular air passageways therebetween, said deflector having an open base and an air passageway in its apex, and vertically spaced baffles in the shell above the spreader plate.

2. A heater of the class described, comprising a shell, a range-like burner in the shell, an inverted hollow conical deflector above the burner and spaced from the wall of the shell, and a spreader in the shell spaced above the deflector for the circulation of air vertically between the shell and deflector and horizontally between the deflector and spreader, said deflector having in its apex an air passageway and also having an open base, whereby air entering the deflector through its air passageway will cause gases in the deflector to burn.

In testimony whereof I affix my signature.

LEO C. SMITH.