US009370291B2

(12) **United States Patent**
Ruiz-Porath et al.

(10) **Patent No.: US 9,370,291 B2**
(45) **Date of Patent: Jun. 21, 2016**

(54) **SUCTION FOOT FOR A FLOOR CLEANING MACHINE**

(71) Applicant: **Hako GmbH**, Bad Oldesloe (DE)

(72) Inventors: **Ricardo Ruiz-Porath**, Bad Oldesloe (DE); **Heinrich Katenhusen**, Bad Oldesloe (DE); **Christian Tabeling**, Lübeck (DE)

(73) Assignee: **Hako GmbH**, Bad Oldsloe (DE)

(*) Notice: Subject to any disclaimer, the term of this patent is extended or adjusted under 35 U.S.C. 154(b) by 0 days.

(21) Appl. No.: **14/721,277**

(22) Filed: **May 26, 2015**

(65) **Prior Publication Data**

US 2015/0342436 A1 Dec. 3, 2015

(30) **Foreign Application Priority Data**

May 27, 2014 (DE) 10 2014 107 469

(51) **Int. Cl.**
A47L 11/30 (2006.01)
A47L 11/40 (2006.01)

(52) **U.S. Cl.**
CPC ***A47L 11/4044*** (2013.01); ***A47L 11/30*** (2013.01)

(58) **Field of Classification Search**
CPC A47L 11/30; A47L 11/4044
USPC 15/401
IPC A47L 11/30
See application file for complete search history.

(56) **References Cited**

FOREIGN PATENT DOCUMENTS

WO	WO-2007/076181	A2	7/2007
WO	WO-2010/073007	A1	7/2010
WO	WO-2011/057228	A1	5/2011

Primary Examiner — David Redding
(74) *Attorney, Agent, or Firm* — Harness, Dickey & Pierce, P.L.C.

(57) **ABSTRACT**

A suction foot for a floor cleaning machine having an outer body, which has side pieces having an L-shaped longitudinal cross-section comprising a first horizontal side piece and a second vertical side piece, which extends perpendicular to the first side piece, having an inner body, which is releasably attached to the outer body. The inner body is coupled to the outer body with a sliding movement that is perpendicular to the first horizontal side piece and parallel to the second vertical side piece. A tension band is provided to press a sealing strip against the inner body. The ends of the tension band engage with the ends of the inner body.

8 Claims, 3 Drawing Sheets

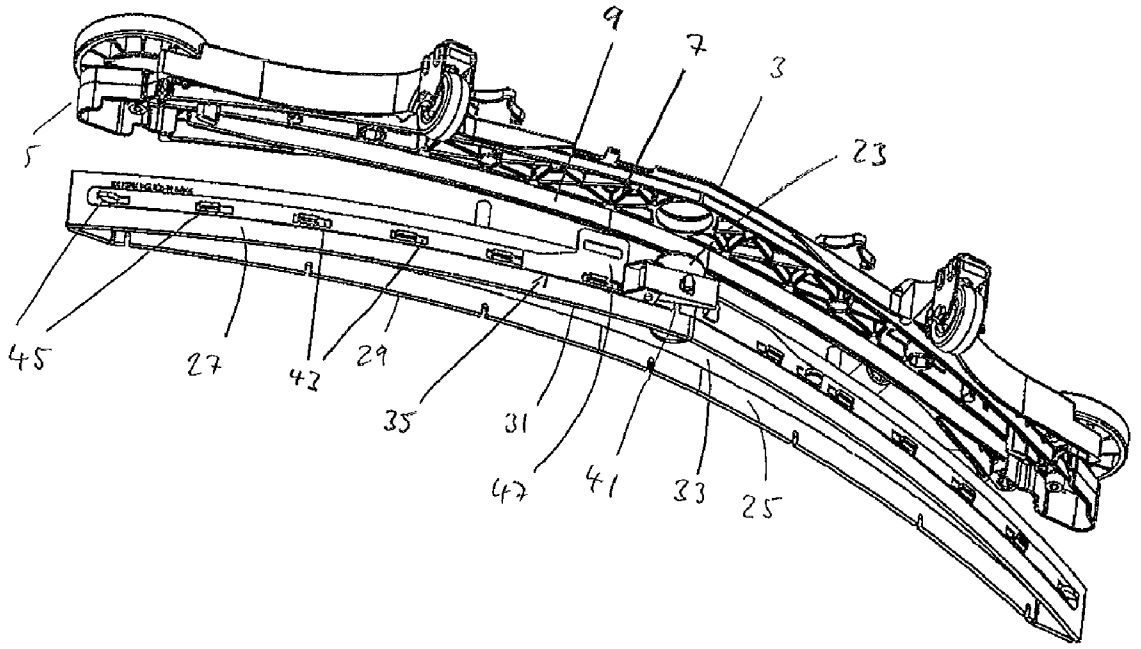

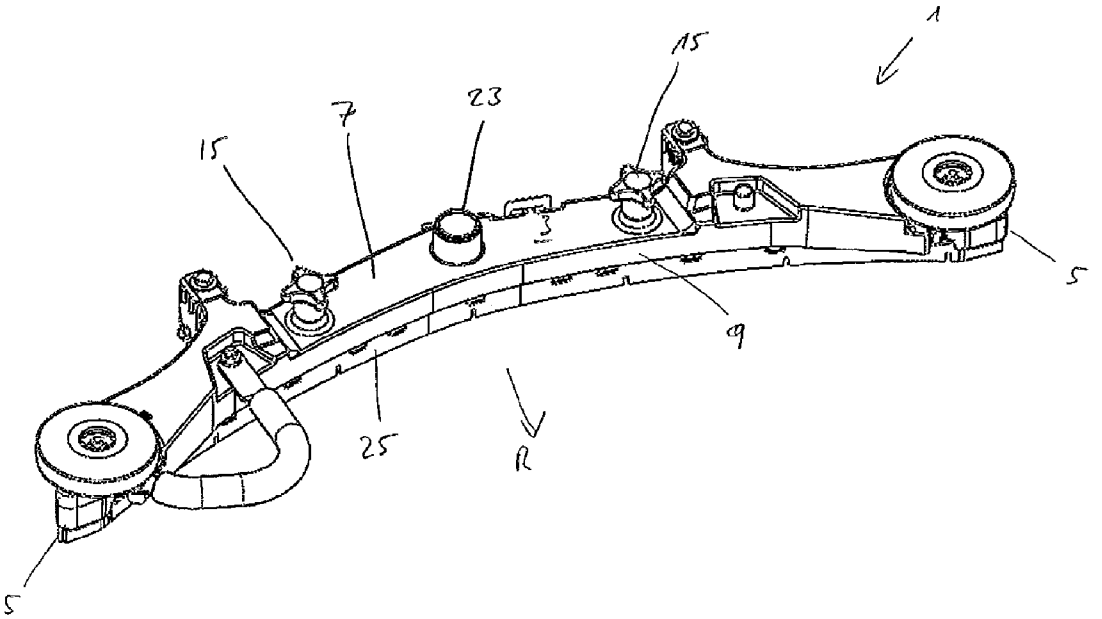

Fig. 1

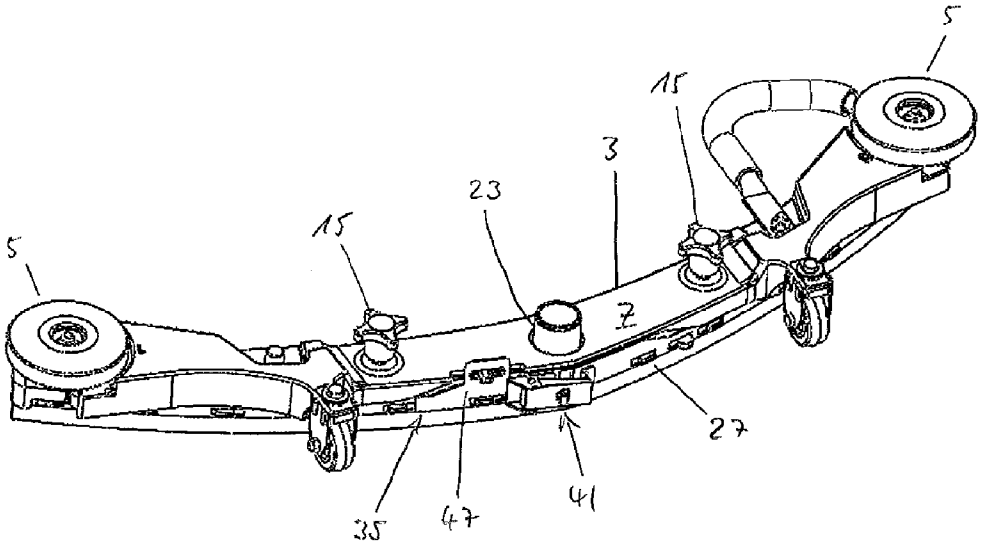

Fig. 2

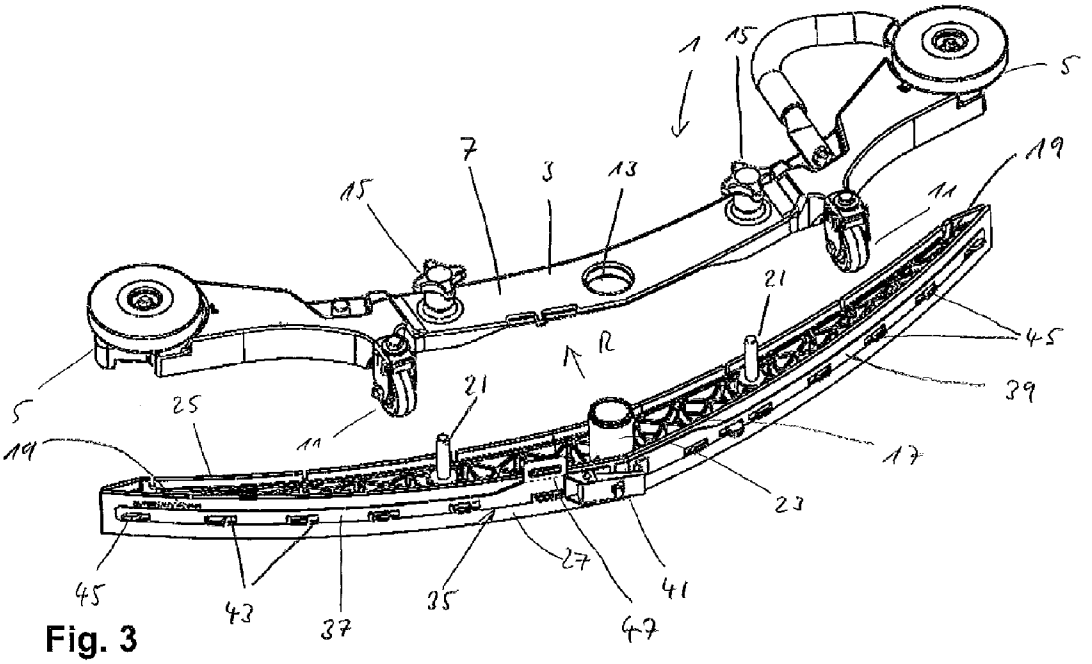
1
15
5
7
3
13
19
11
21
45
R
39
25
17
23
27
41
35
43
37
47

Fig. 3

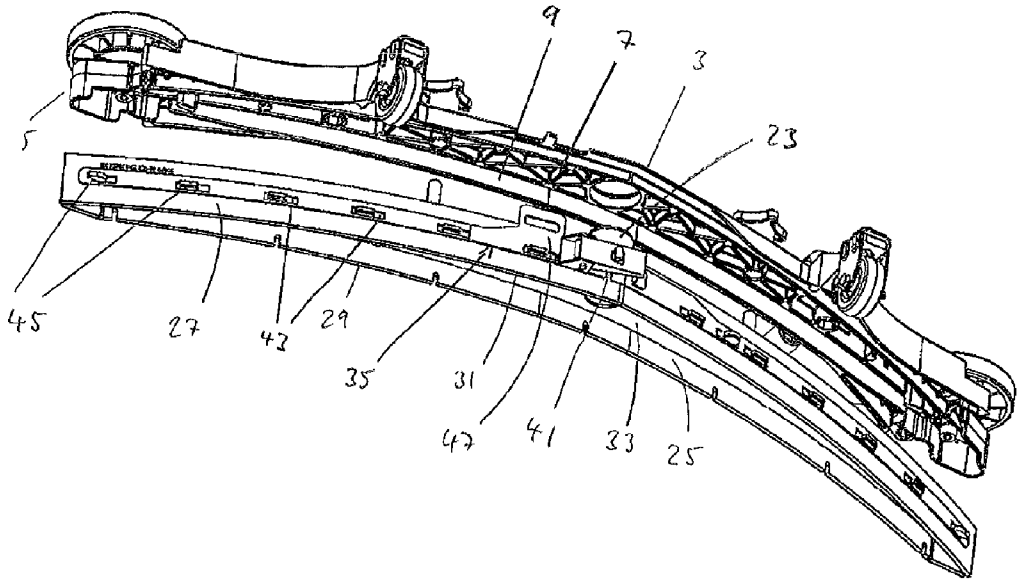
9
7
3
5
23
45
27
43
29
35
31
47
41
33
25

Fig. 4

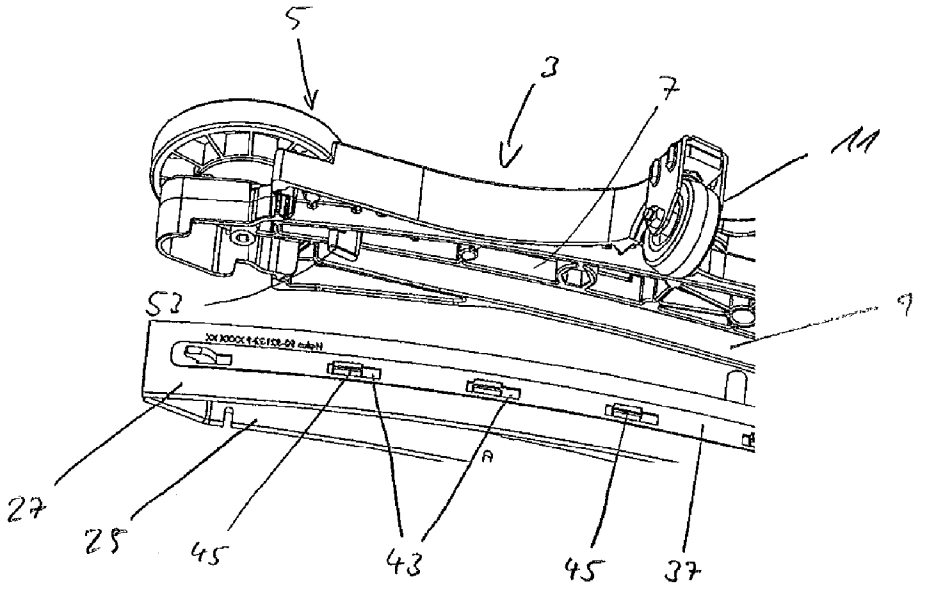

Fig. 5

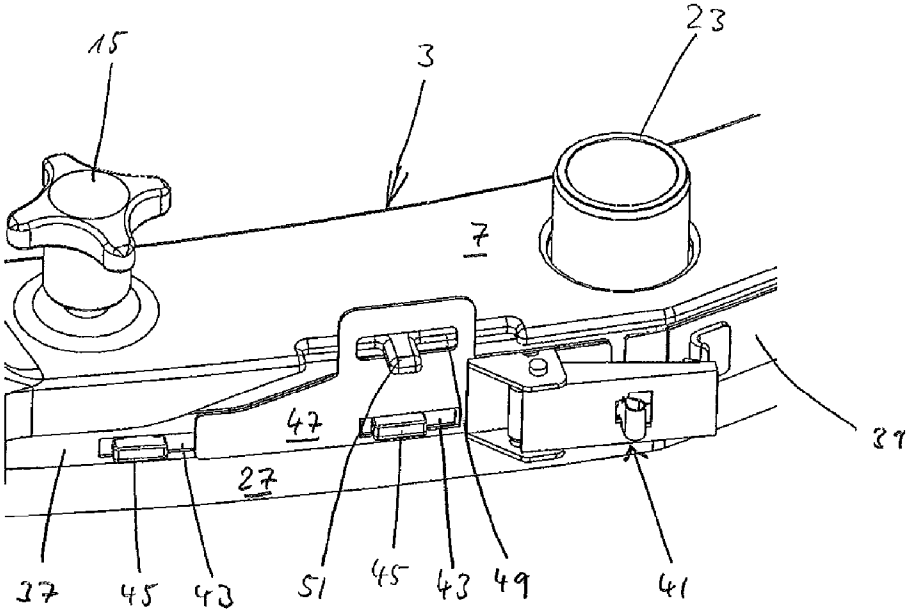

Fig. 6

SUCTION FOOT FOR A FLOOR CLEANING MACHINE

CROSS-REFERENCE TO RELATED APPLICATIONS

This application claims the benefit and priority of German Patent Application Serial No. 10 2014 107 469.6, filed May 27, 2014. The entire disclosure of the above application is incorporated herein by reference.

FIELD

The present disclosure relates to a suction foot for a floor cleaning machine.

BACKGROUND

This section provides a general summary of the disclosure, and is not a comprehensive disclosure of its full scope or all of its features.

Floor cleaning machines and in particular floor scrubbers operate in such a way that fluid is first applied to the floor that is to be cleaned with the aid of a cleaning head, which is provided with driven brushes, and which is mounted on the machine, wherein the brushes ensure that any dirt that is located on the floor is loosened, and then absorbed by the cleaning fluid. A suction foot, which is also mounted on the floor scrubber, serves to suction up the contaminated fluid.

Suction feet of this kind are known from the prior art and have a slotted strip located in the front as viewed in the direction of travel, which is formed out of rubber, having an edge, which rests on the floor area, and having slots, through which the fluid can pass. A sealing strip, which is likewise made of rubber, is provided on the rear side of the suction foot as viewed in the direction of travel, an edge of which sealing strip rests against the floor area so that a suction area is formed between the slotted strip and the sealing strip. Said suction area is connected to a negative pressure source, which is provided in the floor scrubber, via a suction line. During operation, fluid passes through the slots in the suction area and is then suctioned up through the negative pressure source.

During operation, both the slotted strip and the sealing strip are subjected to a certain amount of wear so that it is necessary to replace both the sealing strip and the slotted strip at regular intervals. In addition, the sealing strip and the slotted strip must be mounted on the suction foot in such a way that the edges thereof that face the floor area rest against the floor area over the entire length of the strip. Furthermore, the slotted strip and the sealing strip must be mounted on the inner body of the suction foot in such a way that the suction area, which is formed between said strips, is well sealed, and that air can only pass through the slots, which are provided in the slotted strip. Finally, the design of the suction foot should be such that a user can change the sealing strip and the slotted strip both quickly and reliably.

It is known from WO 2010/073007 A1 than an inner body can be inserted into a guide groove, which is formed in an outer body of the suction foot, wherein the sealing strip or, respectively, the slotted strip is disposed between the two side pieces of the inner body and the wall of the groove. Such a design is problematic, however, due to manufacturing tolerances both in the outer body and in the sealing strip, the slotted strip and the inner body. On the one hand, this may result in the two strips being inserted in an incorrect orientation, and on the other hand, secondary air may be drawn as a result of leaks.

Furthermore, it is known from WO 2007/076181 A2 that the sealing strip and the slotted strip can be pressed into a groove in an outer body with the aid of a conically shaped inner body. Here however, manufacturing tolerances give rise to the problem that the height of the suction area between the lower surface of the inner body and the sealing and slotted strips varies, so that the suction performance also varies.

Finally, it is known from WO 2011/057228 A1, from which the present disclosure emanates, that a slotted strip is first slid onto domes on a side piece of an outer body, said side piece extending vertically. An inner body is then mounted and finally the sealing strip, wherein the entire assembly, comprising the outer body, the slotted strip, the inner body and the sealing strip, is locked into position with the aid of a tension band, the outer ends of which engage with the free ends of the outer body.

With this arrangement, it may happen that, due to an incorrect attachment to the outer body, and due to the tensioning exerted on the outer body with the aid of a tension band, the inner body is deformed in such a way that the contact surfaces formed on the inner body for the sealing strip and the slotted strip do not extend with the necessary orientation relative to the ground.

SUMMARY

This section provides a general summary of the disclosure, and is not a comprehensive disclosure of its full scope or all of its features.

Based on the above-described problems, one object of the present disclosure is to provide a suction foot, which, on the one hand, can be easily and reliably mounted, and with which an incorrect installation by the operator is excluded.

This object can be achieved by designing the inner body and the outer body in such a way that the inner body is coupled to the outer body with a sliding movement that is perpendicular to the first horizontal side piece and parallel to the second vertical side piece, and that the ends of the tension band engage with the ends of the inner body.

In the case of a design of this kind, the slotted strip is disposed between the vertical side piece of the outer body and the inner body, for example, while the sealing strip, which is located behind said slotted strip as viewed in the direction of travel, is tightened with the aid of the tension band on the inner body. This tightening only occurs when the inner body has already been slid onto the outer body through a sliding movement, which is perpendicular to the first horizontal side piece and parallel to the second vertical side piece, and has been coupled to said outer body. When the inner body is coupled to the outer body and, in particular, rests against the first horizontal side piece, said inner body can no longer be displaced transversely and, in particular, perpendicular to the second vertical side piece.

When tightening, the tension band only engages with the inner body, however, due to the engagement or, respectively, the coupling of the inner body and the outer body, said inner body cannot be deformed relative to the outer body, and during this tightening, there are no forces acting on the outer body, which could deform said outer body.

In a preferred embodiment, additional engagement means are provided in the region of the ends of the inner body and of the first horizontal side piece of the outer body, which engagement means engage with one another when the inner body is slid onto the first horizontal side piece. This makes it possible for no deformation of the inner body to occur after it has been mounted on the first side piece of the outer body, which

extends horizontally, even when forces are exerted on the inner body by the tension band.

In a particularly preferred manner, these engagement means are designed in such a way that domes are formed, either on the first horizontal side piece or on the inner body, which domes engage with corresponding recesses either in the first horizontal side piece or in the inner body. Such an embodiment is particularly easy to manufacture.

In addition, it is preferred that the tension band have a first and a second section and that a clamping device be provided, which can assume a released position and a clamping position. In the clamping position, the distance of the free ends of the tension band provided at the ends of the sections, which are located apart from one another, is reduced as compared to the distance in the released position. A clamping device of this kind may be a toggle joint mechanism, for example.

In order to further ensure that the tension band is only tightened when the inner body has already been slid onto the outer body, it is preferred that either the tension band or the outer body, in particular the first horizontal side piece, has a pin, which extends transversely to the second vertical side piece, and the other of the outer body, in particular the first horizontal side piece, and the tension band, has a clip having an elongated hole, which extends in the direction in which the tension band extends. As such, the pin and the clip are disposed in such a way that the pin extends through the elongated hole when the inner body rests against the first side piece and the tension band rests against either the slotted strip or the sealing strip. An assembly of this kind ensures that, in the event that the tension band has already been tightened, when the inner body has not yet been mounted on the outer body and the inner body is then to be slid onto the outer body in this state, the clip first comes into contact with the pin during the sliding movement so that an additional sliding movement that is parallel to the second vertical side piece can no longer occur. This signals to the user that he must first release the tension band, then slide the inner body parallel to the second vertical side piece onto the outer body and then tighten the tension band.

When the tension band is provided with the previously described clamping device, the dimensions of the elongated hole are preferably such that the clamping device can assume both the released and the tightened position when the pin extends through the elongated hole.

The assembly is preferably designed in such a way that the clip is formed on a section of the tension band and the pin is provided on the first horizontal side piece.

Finally, it is preferred that threaded bolts are provided on the inner body, which extend to the first horizontal side piece and which extend through drill holes in the first horizontal side piece. In this way, the movement, along which the inner body is slid onto the outer body prior to tightening, is clearly defined. As such, the inner body can subsequently be locked into place easily with the aid of wing nuts or the like, which are screwed onto the threaded bolts.

DRAWINGS

The present disclosure is explained in greater detail below on the basis of a drawing which merely depicts a preferred exemplary embodiment wherein:

FIG. **1** is a perspective view of the exemplary embodiment from the front;

FIG. **2** is a perspective view of the exemplary embodiment also from the rear;

FIG. **3** is a rear view of the exemplary embodiment in a disassembled state;

FIG. **4** is a perspective view of the exemplary embodiment in a disassembled state from below;

FIG. **5** is a perspective view of a detail at the end of the outer body; and

FIG. **6** is a perspective view of a detail in the central region of the suction foot.

DETAILED DESCRIPTION

With reference to FIGS. **1** through **4** of the drawings, an exemplary suction foot **1** constructed in accordance with the teachings of the present disclosure has an outer body **3**, which as viewed from above, has a curved course, wherein the free ends **5** of the outer body **3** extend further forward than a middle section as viewed in the direction R, in which direction the suction foot **1** is drawn over the floor area when the floor scrubber, on which said suction foot is mounted, is operated. As is particularly evident from FIGS. **3** and **4**, in the cross-section perpendicular to the direction of extension, the outer body **3** has side pieces **7**, **9**, designed having an L-shape between the free ends **5**. As such, a first side piece **7** is provided, which extends horizontal and parallel to the surface that is to be cleaned. A second side piece **9** extends perpendicular thereto in the vertical direction, said second side piece being mounted on the front side of the first side piece **7** as viewed in the direction of travel R. This second side piece **9** is oriented downward from the first side piece **7** to the floor area that is to be cleaned.

Two wheels **11** are provided on the outer body **3**, which support the suction foot **1** in a movement over the floor area that is to be cleaned. Finally, a through hole **13** is located in the center of the outer body **3**, through which a connecting piece, which will be described in greater detail, is passed, and wing nuts **15** are provided, laterally spaced therefrom, which engage with threaded bolts that will also be described in greater detail.

In addition, the suction foot **1** has an inner body **17**, which, like the outer body **3**, has a curved course so that the free ends **19** thereof extend further forward than the middle section as viewed in direction of travel R of the suction foot **1**, and which inner body has a front and a rear contact surface, which extend perpendicular to the second horizontal side piece **9**. Threaded bolts **21**, which extend upward, are provided on the inner body **17**, which bolts can engage with the wing nuts **15** provided on the outer body **3** so that the inner body **17** can be releasably attached to the outer body **3** with the aid of the threaded bolts **21** and the wing nuts **15**, as is shown in FIGS. **1** and **2**. As such, the threaded bolts **21** ensure that the inner body **17** is coupled to the outer body **3** with a sliding movement that is perpendicular to the first horizontal side piece **7** and parallel to the second vertical side piece **9**. When the inner body **17** is coupled to the outer body **3** and, in particular, rests against the first horizontal side piece **7**, said inner body can no longer be displaced transversely and, in particular, perpendicular to the vertical side piece **9**.

Furthermore, the inner body **17** has a connecting piece **23**, which likewise extends upward with reference to the floor area that is to be cleaned, and which creates a through connection to the lower surface of the inner body **17**. In the assembled state, the connecting piece **23** extends through the through hole **13** in the outer body **3** (see FIGS. **1** and **2**).

A slotted strip **25** is mounted to the inner body **17** on the front contact surface thereof, on the side that faces frontwards as seen in direction of travel R, and a sealing strip **27** is mounted to the inner body **17** on the rear contact surface thereof, on the side that faces rearwards as seen in direction of travel R, which slotted strip and sealing strip are made of an

elastic material, for example such as rubber, which have a lower edge **29**, **31**, which are brought into contact with the floor area that is to be cleaned, and which extend downward across the lower surface **33** of the inner body **17** so that a suction area is formed below the inner body **17** between the slotted strip **25** and the sealing strip **27**, which suction area can be connected to a suction device in the floor scrubber via the connecting piece **23**. When in an assembled state, the lower edges **29**, **31** of the slotted strip **25** and the sealing strip **27** extend in a common plane, so that the suction area formed is sealed with respect to the floor area that is to be cleaned when the slotted strip **25** and the sealing strip **27** of the suction foot **1** rest against the floor area.

In the assembled state, when the inner body **17** is mounted on the outer body **3**, the slotted strip **25**, which is mounted on the front side of the inner body **17** on projections, rests against the side of the second vertical side piece **9** that faces rearward, and thus is positioned between the inner body **17** and the outer body **3**.

The sealing strip **27** is mounted on the inner body **17** via a tension band **35**. The tension band **35** has a first section **37** and a second section **39**, which extend outward and away from a clamping device **41**, which is designed as a toggle joint mechanism, which is known per se. As such, the sections **37**, **39** have openings **43**, through which projections **45** provided on the inner body **17** extend. These projections **45** accommodate both the sealing strip **27** and the sections **37**, **39** of the tension band **35**, in order to hold said band in position on the inner body **17**, even when in a released state.

Using the clamping device **41**, the tension band **35** can be moved from a released position, in which the sections **37**, **39** are spaced further apart from one another, into a clamping position, in which the sections **37**, **39** are drawn towards one another.

A clip **47**, which extends upward, is provided on the first section **37** of the tension band **35**, said clip being provided with an elongated hole **49** extending parallel to the direction of extension of the first section **37**, as shown in FIG. **6**. A pin **51** is provided on the first horizontal side piece **7** of the outer body **3** in the region of the clip **47** on the edge that faces rearward, said pin being disposed in such a way that it extends through the elongated hole **29** in the assembled state, in which the inner body **17** is mounted on the outer body **3**. Furthermore, the length of the elongated hole **49** is such that, even when the pin **51** extends through the elongated hole **49**, said pin does not impede a movement of the first section **37** when the clamping device **41** is tightened, and does not impede the transfer of said clamping device into the clamping position. Thus, when the pin **51** extends into the elongated hole **49**, the clamping device **41** can be transferred from the released position into the clamping position.

However, the clip **47** and the pin **51** prevent the inner body **17**, having the slotted strip **25** and sealing strip **27** attached thereon, and the tightened tension band **35** from being mounted on the outer body **3** in the vertical direction by sliding the threaded bolts **21** onto the wing nuts **15**, since the clip **47** is then brought into contact with the pin **51** and a further movement of the inner body **17** to the outer body **3** is impeded. Thus, the assembly of the clip **47** and pin **51** ensures that the tension band is only attached and tightened after the inner body **17** has been mounted on the outer body **3**.

Finally, as is evident from FIG. **5**, the side of the first side piece **7** of the outer body **3**, which extends horizontally, and which faces downward, has domes **53**, which extend downward in the region of the free ends **5**, wherein said domes can engage in corresponding recesses in the region of the free ends **19** of the inner body **17**. The engagement of the domes **53** further fixes the position of the free ends **19** of the inner body **17** relative to the free ends of the outer body **3**.

In the above described embodiment, the slotted strip **25** and the sealing strip **27** are replaced as follows.

First, the suction foot **1** must be detached from the machine, not shown here, by releasing the wing nuts **15**. The engagement of the clip **47** and pin **51** prevents the inner body **17** from being released from the outer body **3**.

After the clamping device **41** has been released and transferred into the release position, the tension band **35** must subsequently be removed from the inner body **17** in such a way that the sections **37**, **39** are removed from the projections **45** when the tension band **35** is in the released position. Because the clip **47** and the pin **51** no longer impede a corresponding movement, after the wing nuts **15** have been released, the inner body **17** can subsequently be removed from the outer body **3**. The slotted strip **25** and the sealing strip **27** can then be replaced in that they, in turn, are removed from the corresponding projections **45** and new strips are mounted.

The inner body **17** is subsequently slid back on the outer body **3** through a movement that is perpendicular to the first horizontal side piece **7** and parallel to the second vertical side piece **9**, wherein the threaded bolts **21** are screwed onto the wing nuts **15**. This can occur only when the tension band **35** has not yet been mounted on the projections **45** on the side of the inner body **17** that faces rearward, since otherwise, the clip **47** would come into contact with the pin **51**.

When the threaded bolts **21** of the inner body **17** have been screwed completely onto the wing nuts **15**, the tension band **35** can be mounted, wherein the pin **51** then extends through the elongated hole **49** in the clip **47**. The clamping device **41** is subsequently transferred into the clamping position, wherein this is not impeded by the dimensions of the elongated hole **49**.

This sequence, in which the body **17** is first mounted on the outer body **3** and only then is the tension band **35** tightened, ensures that the inner body **17** is not deformed prior to mounting. When the inner body **17** is mounted on the outer body **3**, the threaded bolts **21** as well as the engagement of the domes **53** on the outer body **3** with corresponding recesses on the inner body **17** prevent a deformation of the inner body **17**. In turn, it is thereby ensured that the slotted strip **25** and the sealing strip **27** or, respectively, the lower surfaces **29**, **31** thereof, actually extend in a common plane, which extends parallel to the floor area that is to be cleaned during use, so that the entire length of the lower surfaces **29**, **31** actually rests against the floor area. It is thereby ensured that the suction area formed beneath the inner body **17** is reliably sealed with respect to the floor area and that a negative pressure can be reliably generated therein with the aid of a suction device, not shown here, which is connected to the connecting piece **23**. Finally, the suction foot according to the disclosure can be easily assembled.

The foregoing description of the embodiments has been provided for purposes of illustration and description. It is not intended to be exhaustive or to limit the disclosure. Individual elements or features of a particular embodiment are generally not limited to that particular embodiment, but, where applicable, are interchangeable and can be used in a selected embodiment, even if not specifically shown or described. The same may also be varied in many ways. Such variations are not to be regarded as a departure from the disclosure, and all such modifications are intended to be included within the scope of the disclosure.

What is claimed is:

1. A suction foot for a floor cleaning machine having an outer body (3), which has side pieces (7, 9) arranged in the longitudinal cross-section in an L-shaped manner comprising a first horizontal side piece (7) and a second vertical side piece (9), which extends perpendicular to the first side piece (7),

having an inner body (17), which is releasably attached to the outer body (3), said inner body having a front and a rear contact surface, which extend perpendicular to the first horizontal side piece (7),

having an elastic slotted strip (25), which is releasably attached to the inner body (17) on the front contact surface thereof,

having an elastic sealing strip (27), which is releasably attached to the inner body (17) on the rear contact surface thereof, and

having a tension band (35), which is designed such that said tension band presses the sealing strip (27) against the inner body (17),

wherein the slotted strip (25) and the sealing strip (27) extend over the lower surface (33) of the inner body (17), said surface facing downward and away from the first horizontal side piece (7), so that a suction area is formed between the slotted strip (25) and the sealing strip (27),

wherein the inner body (17) and the outer body (3) are designed in such a way that the inner body (17) is coupled to the outer body (3) with a sliding movement that is perpendicular to the first horizontal side piece (7) and parallel to the second vertical side piece (9), and

wherein the ends of the tension band (35) engage with the ends (19) of the inner body (17).

2. The suction foot according to claim 1, wherein engaging means are provided in the region of the ends (19) of the inner body (17) and of the first horizontal side piece (7), which engaging means engage with one another when the inner body (17) is mounted on the first horizontal side piece (7).

3. The suction foot according to claim 2, wherein the engagement means have domes (53), which are formed on the first horizontal side piece (7), and which extend away from said side piece, and wherein recesses are formed in the inner body (17) in the upper side thereof that faces the first horizontal side piece (7), which recesses are designed to engage with the domes (53).

4. The suction foot according to claim 1, wherein the tension band (35) has a first and a second section (37, 39),

wherein a clamping device (41) is provided, which can assume a released position and a clamping position, and

wherein, while in the clamping position, the distance of the free ends of the tension band (35) provided at the ends of the sections (37, 39), which are located apart from one another, is reduced as compared to in the released position.

5. The suction foot according to claim 1, wherein either the tension band (35) or the outer body (3) has a pin (51), which extends transversely to the second vertical side piece (9),

wherein the other of the first horizontal side piece (7) and the tension band (35) has a clip (47) having an elongated hole (49), which extends in the direction in which the tension band (35) extends,

wherein the pin (51) and the clip (47) are disposed in such a way that the pin (51) extends through the elongated hole (49) when the inner body (17) rests against the first side piece (7) and the tension band (35) rests against the sealing strip (27).

6. The suction foot according to claim 5, wherein the dimensions of the elongated hole (49) are such that the clamping device (41) can assume the released position and the clamping position, when the pin (51) extends into the elongated hole (49).

7. The suction foot according to claim 5, wherein the clip (47) is provided on one of the sections (37) of the tension band (35), and the pin (51) is provided on the outer body (3), preferably the first horizontal side piece (7).

8. The suction foot according to claim 1, wherein threaded bolts (21) are provided on the inner body (17), which extend to the first horizontal side piece (7), and which extend through drilled holes in the first horizontal side piece (7).

* * * * *