July 5, 1927

1,634,317

H. F. BENSON

IMPELLER BALANCING AND SEALING DEVICE

Filed July 22, 1925

Fig. 1.

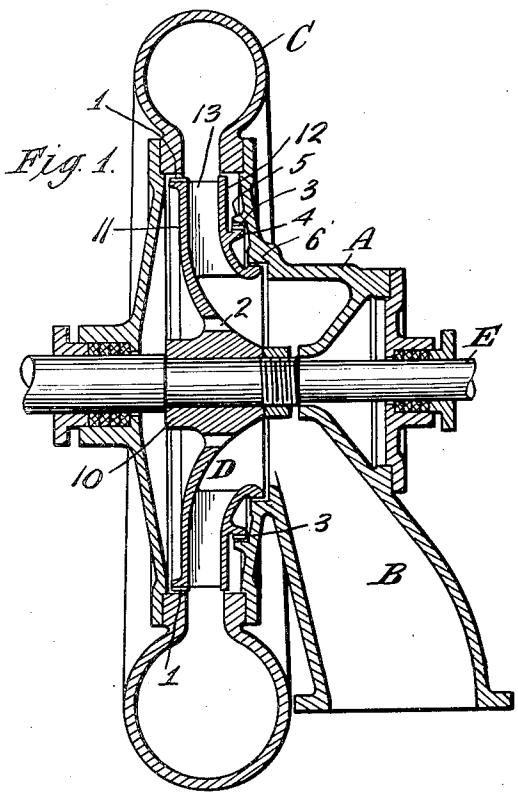

Fig. 2.

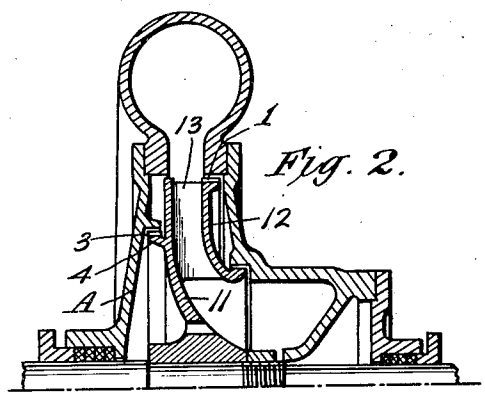

Fig. 3.

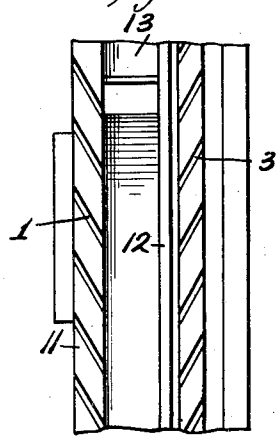

Inventor:
Harry F. Benson
by his Attys:
Philip Sawyer Rice & Kennedy

Patented July 5, 1927. 1,634,317

UNITED STATES PATENT OFFICE.

HARRY F. BENSON, OF HOLYOKE, MASSACHUSETTS, ASSIGNOR TO WORTHINGTON PUMP AND MACHINERY CORPORATION, OF NEW YORK, N. Y., A CORPORATION OF VIRGINIA.

IMPELLER BALANCING AND SEALING DEVICE.

Application filed July 22, 1925. Serial No. 45,189.

This invention relates to improved means for balancing the rotating impellers of pumps or the like, and is especially adapted for centrifugal or axial flow pumps for liquids. The especial object of the invention is to provide simple and inexpensive balancing and sealing means which will balance the impellers so as to prevent excessive end thrust on the thrust bearings, while avoiding the short circuit losses in many present forms of balancing devices, and by which the balance will be maintained independently of wear through long service and be maintained independent of impeller speed or change in axial position of the impeller. The invention is applicable to either single or multistage pumps and for either horizontal or vertical service. It will, however be found of special value when applied to pumps of the deep well type, where the great depth and lift of water produces a heavy downward thrust unless balancing means are provided and where the impellers may be more or less inaccessible and consequently should require no adjustment or inspection after installation, and afford no opportunity for the deposit of sand and foreign matter and consequent interference with operation. In such pumps particularly, also, it is frequently necessary to produce a resultant upward thrust to counteract the weight of the rotating parts as well as the water load, and the devices embodying the present invention are well adapted for this purpose.

The invention includes broadly the use of axial flow means for producing the balance desired, as distinguished from the radial flow means heretofore suggested for this purpose, and certain features of construction and arrangement of parts all as fully described in the following specification and specifically pointed out in the claims.

In the accompanying drawings forming a part of this specification, I have shown centrifugal and axial flow pumps embodying the invention in preferred forms, in which drawings—

Figure 1 is a central vertical section of a horizontal centrifugal pump with my devices applied to secure a resultant thrust toward the back of the impeller;

Figure 2 is a similar view showing an impeller with the resultant thrust toward the suction or front of the impeller;

Figure 3 is a developed plan or edge view of the impeller of Fig. 1.

Referring now to Fig. 1, A is the pump casing having the suction B and discharge volute C, and D is the impeller shown as of a common type of centrifugal impeller with the hub 10, web 11, shroud 12 and impeller vanes 13, the impeller being carried by the shaft E, which may be of any usual or suitable form.

As shown in Fig. 1, the impeller web 11 is provided at its periphery with inclined axially-extending slots 1 forming axial flow pumping vanes for liquid admitted to the back of the impeller from the suction through the usual opening 2, and the shroud 12 is provided with similar inclined axial slots 3, the latter forming vanes on a projecting shoulder 4 co-acting with an inwardly extending shoulder 5 on the casing to form axial flow pumping means and positioned to secure a partial balancing and the inner edge of the shroud 12 having sufficient clearance between it and the casing shoulder 6 for the admission of suction liquid to the pumping slots 3. With this construction, the pressure on the back of the impeller web 11 will be suction pressure throughout, while the pressure on the outside of the shroud 12 will be at least discharge pressure from the slots 3 to the outer edge of the impeller, thus securing a resultant thrust on the impeller to the left in Fig. 1, which resultant thrust may be used for balancing pressure from other parts of the pump or for counteracting the weight of the rotating parts in a vertical pump.

In Figure 2 the construction is the same as in Fig. 1, except that the resultant thrust on the impeller by the position of the slots 3, is towards the suction, or to the right in Fig. 2, the slots 3 and co-acting shoulder 4 being placed on the web of the impeller, and the edge slots 1 being placed on the shroud of the impeller.

In the embodiment of my invention in any of the forms shown, or other suitable forms which may be used, the axial flow pumping slots or vanes will be of such form and dimensions as to easily pump against the pressure at the impeller discharge, so as to maintain suction pressure on their inlet sides and prevent leakage of pressure fluid past the vanes. The vanes or slots, however, are

preferably so formed as to require the pumping of only a very small quantity of fluid to maintain pressure against the impeller discharge pressure. It is necessary only to design the balancing pumping means so as to insure a maximum pumping head greater than the pressure produced by the impeller, as the exact balance between the impeller pressure and the balancing axial flow pressure will automatically adjust itself by slight variations in the small quantity pumped by the axial flow pumping means.

It will be seen that there is no loss of pump efficiency in the construction shown, as the fluid pumped by the balancing vanes is not a short circuit loss, but all this fluid is taken at suction pressure and raised to the impeller discharge pressure for delivery therewith, thus causing no loss, either in capacity or energy. It will be seen, also, that the balancing means is independent of the exact axial position of the impeller and allows a large axial range of position of the impeller, without affecting the efficient operation of the balancing devices, and that the operation of the devices will not be affected by wear through long service. It is not necessary, moreover, to accurately determine the area of the holes through the impeller web or the clearances between the impeller and casing through which the suction fluid is supplied to the balancing means, as these need only be large enough to supply the maximum quantity of fluid to be pumped by the balancing means. The value of the present improvement as applied to multistage pumps will also be apparent, as the provision of axial pumping vanes, as distinguished from radial vanes of prior balancing arrangements materially reduces not only the cost of assembly of pumps generally in which the present improvement is present, but also avoids the large expense necessarily involved in multistage pumps when provided with radial vanes for a similar purpose, as there is no requirement for accurate positioning of all the stages to secure proper balancing and sealing.

What is claimed is:

1. In a fluid pump, the combination with a casing and a rotating impeller therein producing fluid pressure at discharge, of sets of axial flow pumping vanes on opposite sides of the impeller cooperating with the casing to form axial flow pumping means arranged at different radial distances to secure a resultant thrust on the impeller in one direction.

2. In a fluid pump, the combination with a casing and a rotating impeller therein producing pressure at discharge, of a set of axial flow pumping vanes on the exterior of one side of the impeller cooperating with the casing to form axial flow pumping means arranged to maintain suction pressure thereon, and a second set of axial flow pumping vanes carried by the exterior of the opposite side of the impeller cooperating with the casing to form axial flow pumping means arranged on a shorter radius to secure a resultant thrust on the impeller.

3. In a fluid pump, the combination with a casing and a rotating impeller therein producing pressure at discharge, of a set of axial flow pumping vanes carried by the periphery of one side of the impeller and cooperating with the casing to form axial flow pumping means, and a second set of axial flow pumping vanes carried by the exterior of the opposite side of the impeller cooperating with the casing to form axial flow pumping means arranged on a shorter radius to secure a resultant thrust on that side of the impeller.

4. In a fluid pump, the combination with a casing, of a shrouded impeller, axial flow pumping vanes carried by the web and shroud of the impeller and arranged to pump from the side chambers of the impeller to the impeller discharge against discharge pressure, fluid connections for the supply of suction fluid to said chambers and axial flow pumping vanes, one set of said axial flow pumping vanes being carried at the outer periphery of the impeller and the other set being carried on a shorter radius to secure a resultant thrust on the impeller in one direction.

In testimony whereof, I have hereunto set my hand.

HARRY F. BENSON.