March 23, 1954 F. COLLURA 2,672,917

ADJUSTABLE CHAIR

Filed May 19, 1950 7 Sheets-Sheet 1

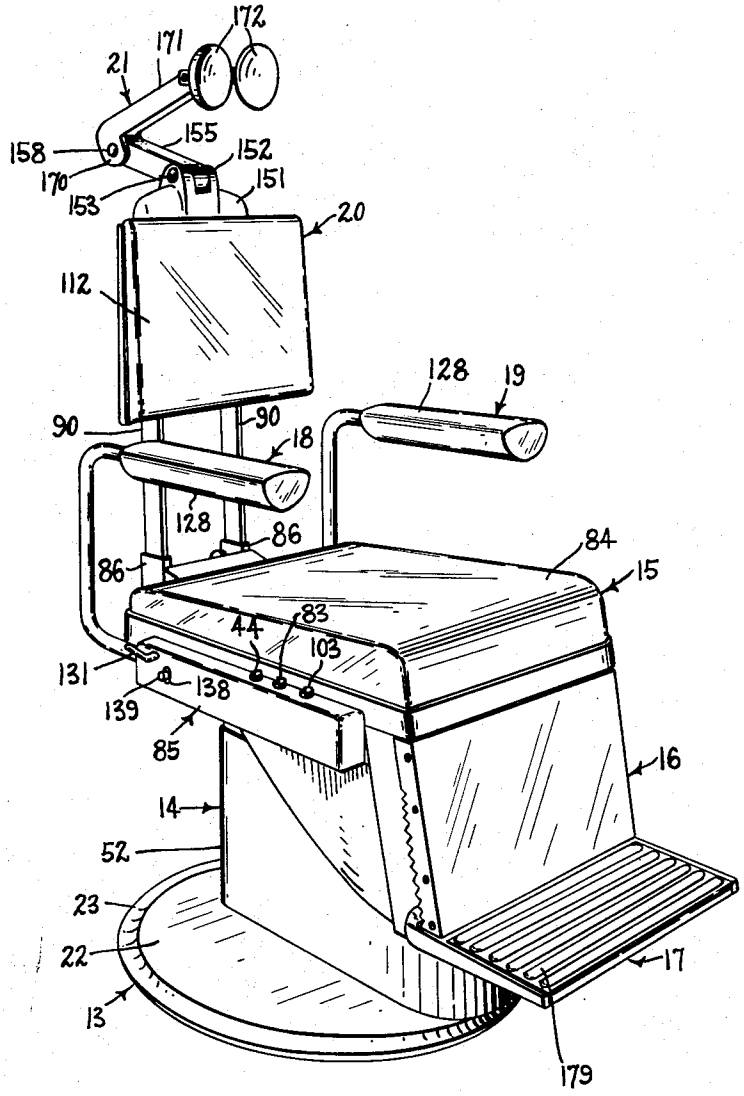

Fig. 1

INVENTOR.
FRANCESCO COLLURA
BY
Louis A. Cagnoa
ATTORNEY

March 23, 1954 F. COLLURA 2,672,917

ADJUSTABLE CHAIR

Filed May 19, 1950 7 Sheets-Sheet 2

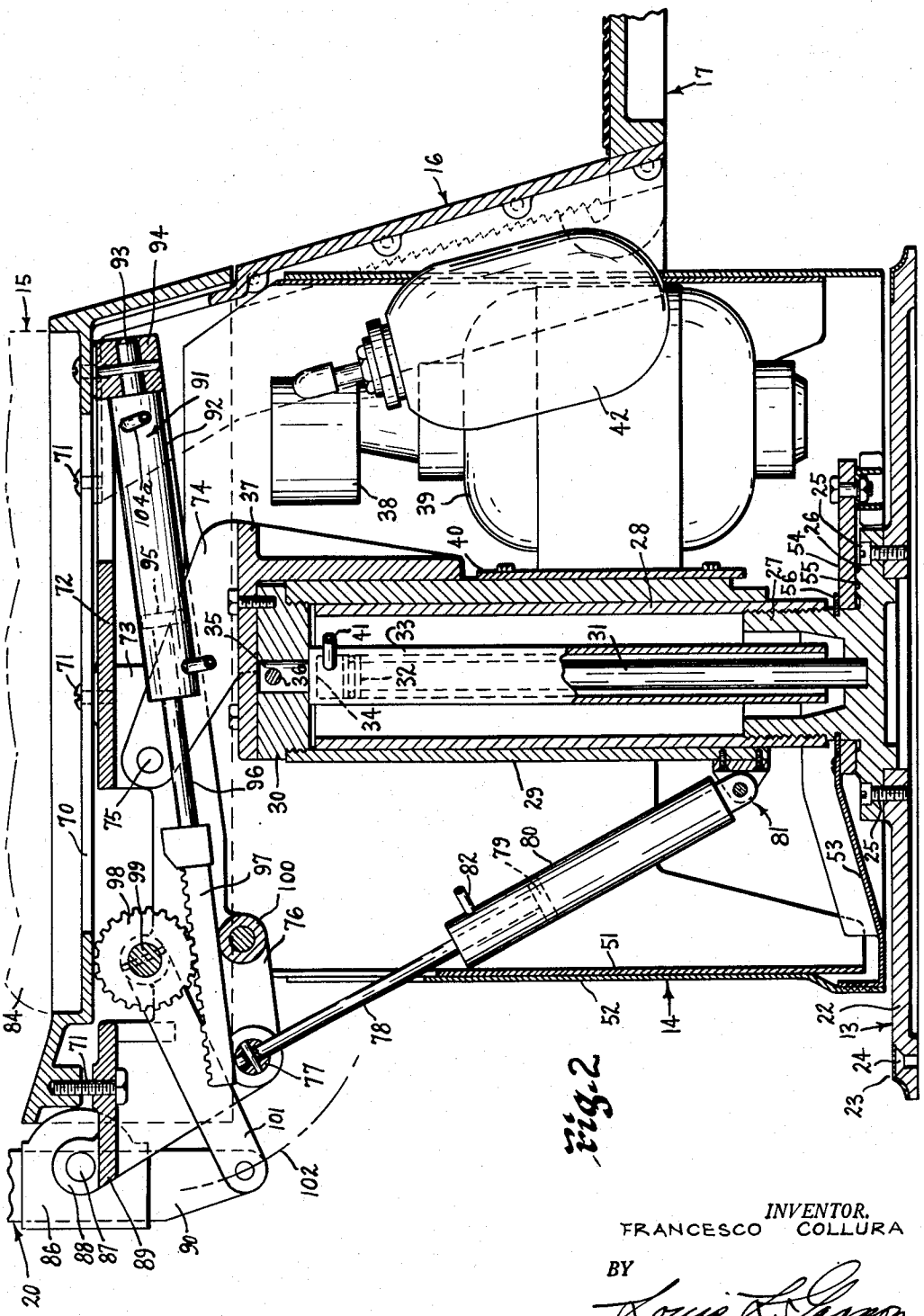

Fig. 2

INVENTOR.
FRANCESCO COLLURA

BY

ATTORNEY

March 23, 1954 F. COLLURA 2,672,917

ADJUSTABLE CHAIR

Filed May 19, 1950 7 Sheets-Sheet 3

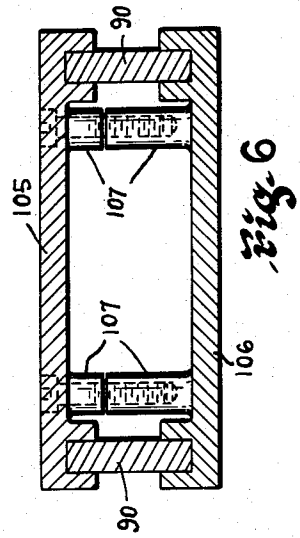

Fig. 6

Fig. 3

INVENTOR.
FRANCESCO COLLURA

BY

Louis A. Gagnon

ATTORNEY

March 23, 1954 F. COLLURA 2,672,917

ADJUSTABLE CHAIR

Filed May 19, 1950 7 Sheets-Sheet 4

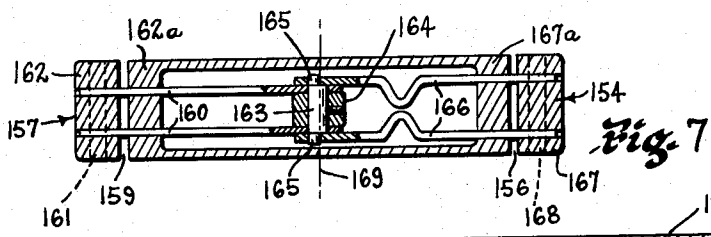

Fig. 7

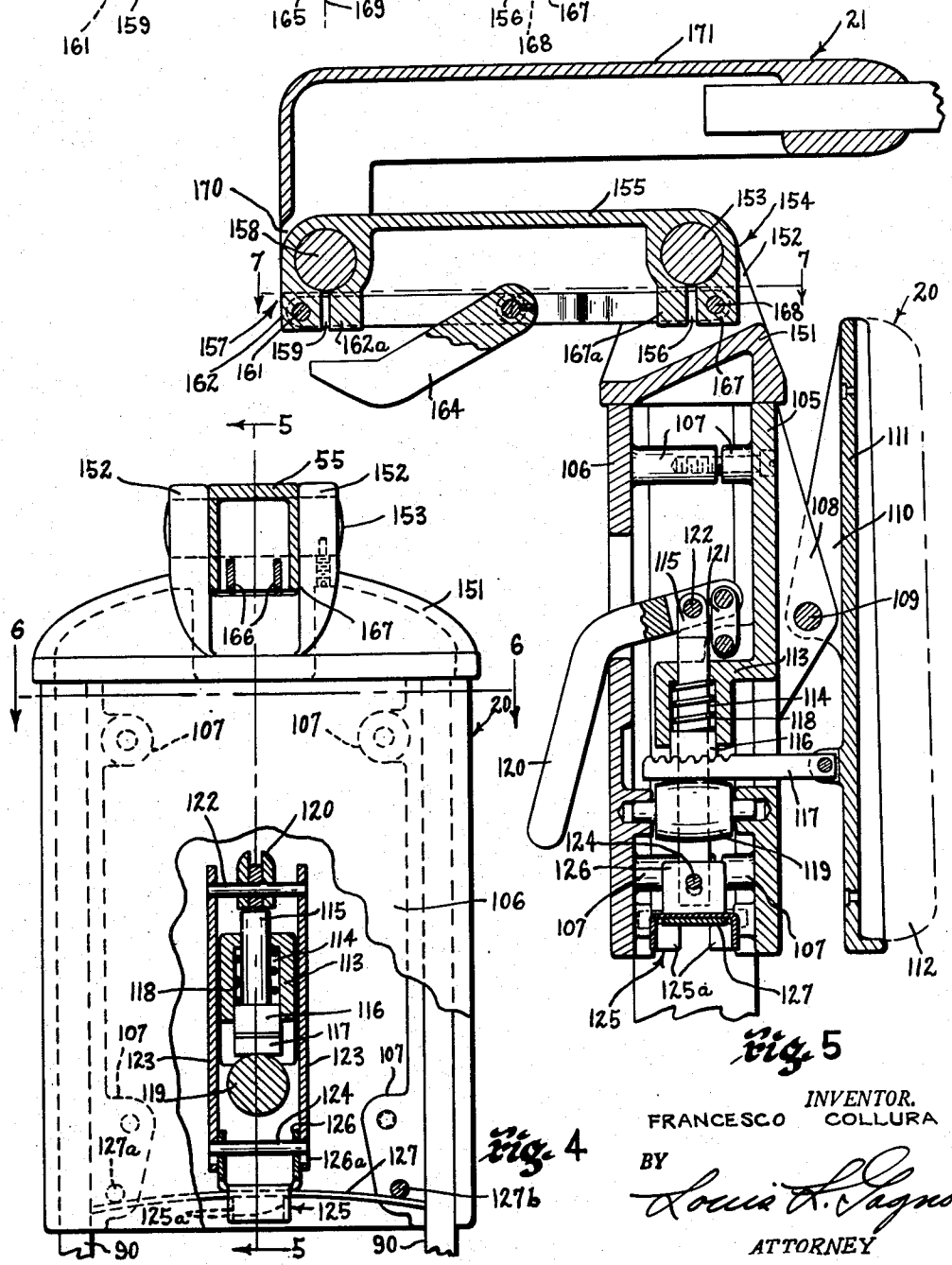

Fig. 4

Fig. 5

INVENTOR.
FRANCESCO COLLURA

BY Louis A. Cagnon

ATTORNEY

March 23, 1954 F. COLLURA 2,672,917

ADJUSTABLE CHAIR

Filed May 19, 1950 7 Sheets-Sheet 5

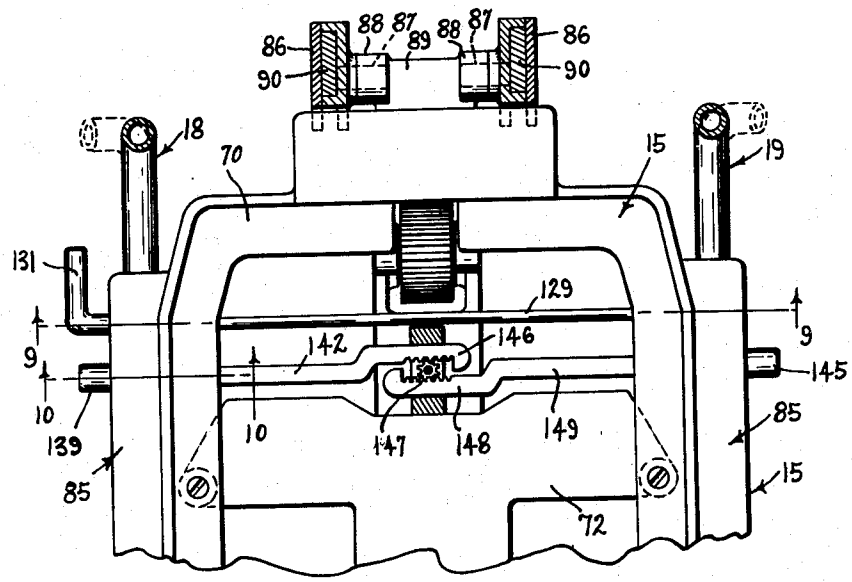

Fig. 8

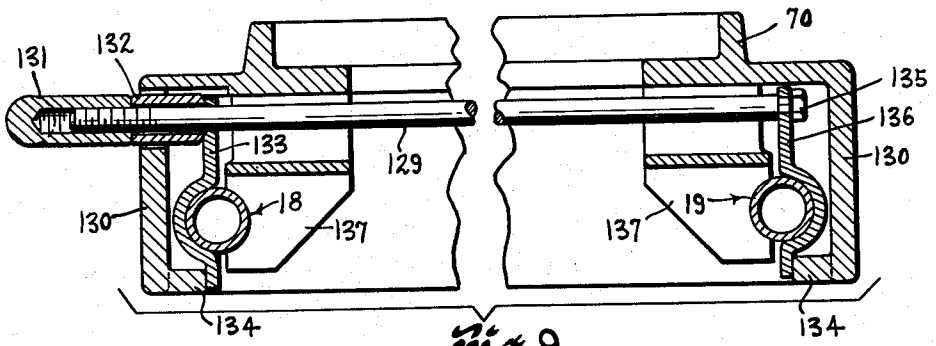

Fig. 9

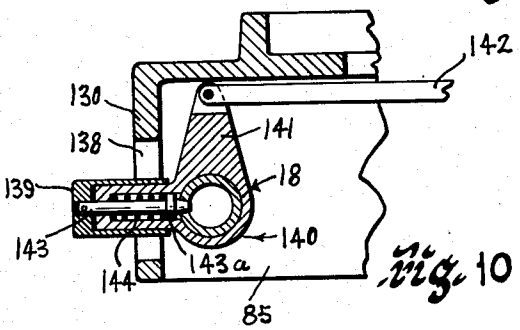

Fig. 10

INVENTOR.
FRANCESCO COLLURA
BY
Louis A. Cagnon
ATTORNEY

March 23, 1954 F. COLLURA 2,672,917

ADJUSTABLE CHAIR

Filed May 19, 1950 7 Sheets-Sheet 6

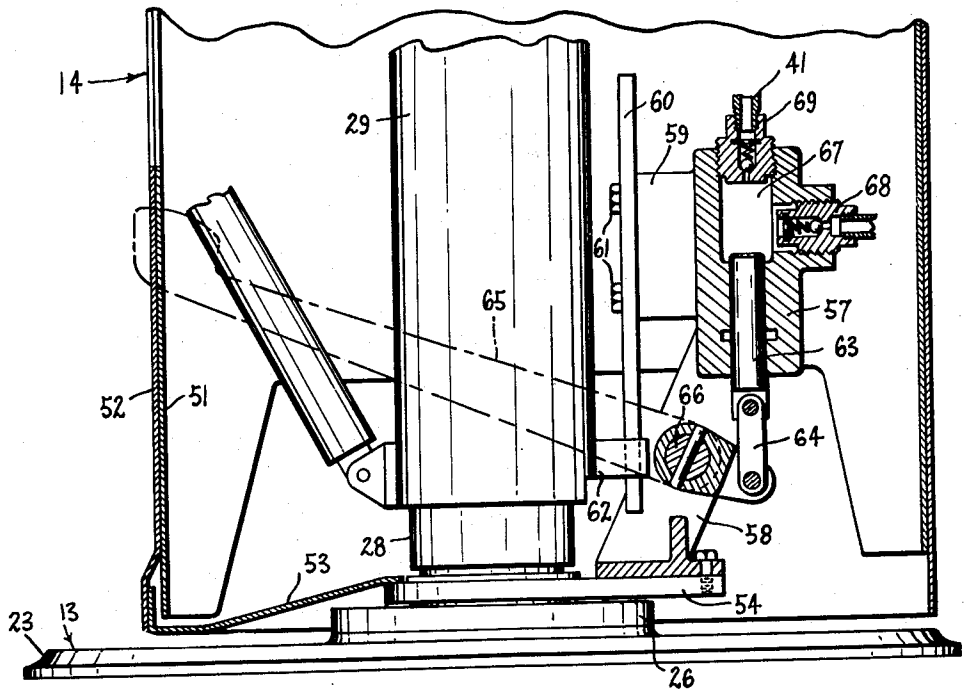

Fig. 12

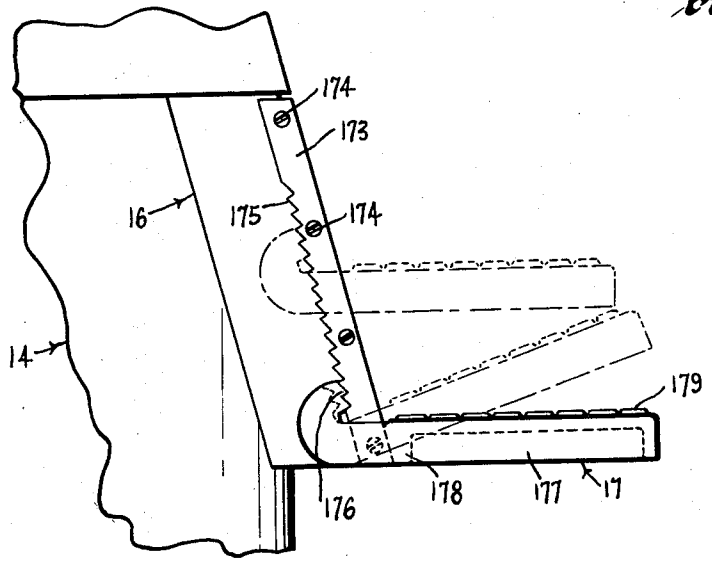

Fig. 11

INVENTOR.
FRANCESCO COLLURA
BY
Louis A. Lagnese
ATTORNEY

March 23, 1954 F. COLLURA 2,672,917

ADJUSTABLE CHAIR

Filed May 19, 1950 7 Sheets-Sheet 7

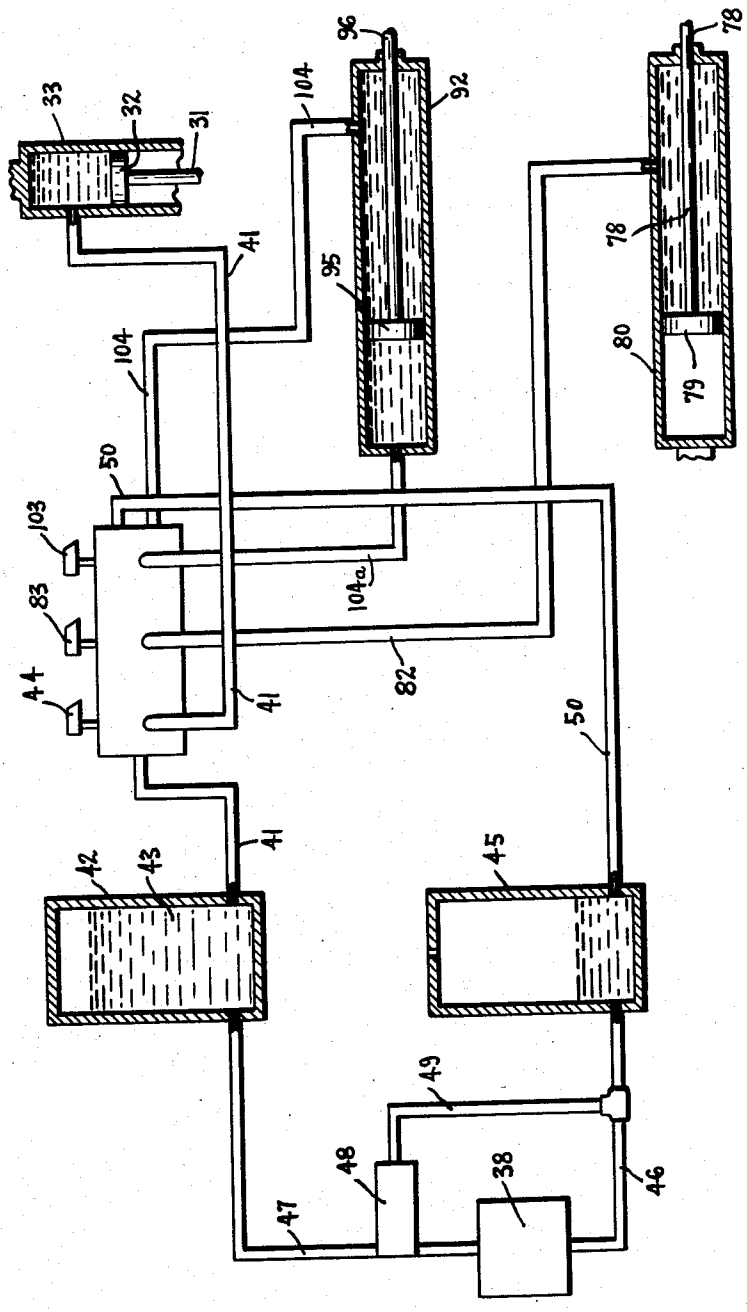

Fig. 13

INVENTOR.
FRANCESCO COLLURA

BY

ATTORNEY

Patented Mar. 23, 1954 2,672,917

UNITED STATES PATENT OFFICE

2,672,917

ADJUSTABLE CHAIR

Francesco Collura, New York, N. Y., assignor to American Optical Company, Southbridge, Mass., a voluntary association of Massachusetts

Application May 19, 1950, Serial No. 162,951

9 Claims. (Cl. 155—25)

1

This invention relates to improvements in chairs and has particular reference to the provision of an adjustable chair such as is used in the practice of optometry and other arts where the position of the individual or patient occupying the chair may be altered as desired.

A principal object of this invention is to provide an adjustable chair permitting a patient occupying the chair to assume different desired positions varying from an upright to an inclined position whereby most of said adjustments may be separately accomplished by operation of simple finger-tip controls and wherein a tilting movement may be imparted to the chair back, seat, apron and footrest simultaneously, and the said chair may be raised or lowered independently of the other adjustments as desired.

Another object is the provision of an adjustable chair of the above character wherein the various adjustments are performed hydraulically and automatically upon manipulation of simple finger-tip control means.

Another object is the provision of a chair of the above character having improved means for efficiently adjusting the chair back and backrest to the desired height and angle, independent means for adjusting the headrest for proper and comfortable support of the patient's head, and means for quickly adjusting the footrest to accommodate for the differences in the lengths of legs of various patients.

Another object is to provide a chair of the above character with adjustable arms which may be slightly angled or completely lowered by operation of simple and efficient control means therefor.

A further object resides in the provision of a chair of the above character embodying mechanisms for simply and efficiently adjusting various portions of the chair to various positions and angles, such mechanisms being characterized by simplicity of structure, ruggedness, and ease of operation, the chair in its entirety being thoroughly reliable and efficient in its operation, strong, durable, and comparatively inexpensive to manufacture.

Other objects and advantages of the invention will become apparent from the following description taken in connection with the accompanying drawings, in which:

Fig. 1 is a perspective view of an adjustable chair embodying the present invention;

Fig. 2 is a sectional view showing the operating mechanism located within the chair base;

Fig. 3 is a fragmentary side elevational view

2

of the chair seat and back illustrating various positions to which they may be adjusted;

Fig. 4 is a fragmentary rear elevational view partly in section of the chair back illustrating the means for adjusting the same;

Fig. 5 is a sectional view taken on line 5—5 of Fig. 4 and looking in the direction of the arrows;

Fig. 6 is a sectional view taken on line 6—6 of Fig. 4;

Fig. 7 is a sectional view taken on line 7—7 of Fig. 5 looking in the direction of the arrows;

Fig. 8 is a fragmentary sectional view showing the means for adjusting the chair arm-rests;

Fig. 9 is a fragmentary sectional view taken on line 9—9 of Fig. 8 and looking in the direction of the arrows;

Fig. 10 is a fragmentary sectional view taken on line 10—10 of Fig. 8 and looking in the direction of the arrows;

Fig. 11 is a fragmentary side view of the adjustable foot rest;

Fig. 12 is a fragmentary sectional view through a portion of the chair base showing the manually operable foot pump for raising and lowering the chair; and

Fig. 13 is a schematic diagram of the hydraulic system.

Prior art hydraulically operated chairs have consisted generally of a hydraulically actuated lift embodying a piston reciprocable in a cylinder and moved therein by the pressure of a hydraulic fluid. In such devices the fluid is drawn from a fluid chamber or reservoir and pressures are built up on the fluid by means of a manually actuated pump usually operated by a hand lever or a foot pedal. The result has been that inconvenient and time-consuming operations are necessary in adjusting the chair, and it is frequently necessary to make such adjustments several times before securing the proper desired position.

The present invention overcomes the above objections by providing a chair with automatically operating hydraulic means so constructed and arranged that by operation of simple finger-tip controls selected parts of the chair or combinations thereof may be adjusted to assume the desired position quickly, smoothly and efficiently.

Referring to the drawings wherein like characters of reference designate like parts throughout the several views, the invention is embodied in a chair having a base 13, a pedestal 14, seat portion 15 with attached apron 16, foot rest 17 and arm rests 18 and 19, back rest 20, and head rest 21. The base 13 is formed as a disc-like portion 22 having an annular ring 23 disposed

therearound and secured to the floor by means such as bolts inserted through openings 24 provided therefor.

The chair lifting mechanism is mounted on the base 22 and includes a supporting member 26 (Fig. 2) which is attached substantially centrally of the base 22 as by bolts 25 and is formed with a hollow upright portion 27. The outer surface of the upright portion 27 is threaded to receive the lower end of an inner sleeve 28, an outer sleeve 29 being slidably mounted over the inner sleeve 28 and having a plug 30 sealing its upper end.

A vertical rod 31 has one end fixedly located in the supporting member 26 within the upright 27 and carries at its other end a piston disc 32 which is adapted to snugly reside within a longitudinally reciprocable cylinder 33.

The cylinder 33 has its upper end closed as at 34 and has a portion 35 of smaller diameter inserted within the plug 30 and secured therein by a pin 36. A supporting bracket 37 is secured as by bolts to the plug 30 and carries the upper portions of the chair, including the seat and back.

A hydraulic system is used to actuate the lifting mechanism and includes a pump 38 which is attached to and operable by an electric motor 39 carried by a bracket 40 attached to the outer sleeve 29. A conduit 41 has one end thereof in communication with the interior of the cylinder 33 above the piston disc 32 and has its other end in communication with a high pressure tank 42 (Fig. 13) containing a hydraulic fluid 43. A control valve 44, which may be suitably located for easy accessibility such as by attachment adjacent the seat of the chair (Fig. 1), is suitably connected to the conduit 41 for controlling the flow of hydraulic fluid to the cylinder 33 in a conventional manner.

A low pressure tank 45 is adapted to normally store some of the fluid 43, and upon operation of the pump 38 under control of the electric motor 39 fluid is transferred from tank 45 through conduits 46 and 47 to tank 42 where it is retained under high pressure. A safety device in the form of a relief valve 48 permits drainage of some of the fluid from tank 42 under excessive high pressure conditions, allowing it to pass to the tank 45 through a conduit 49 without passing through the pump 38.

Thus, when the operator turns the control valve 44 in one direction, fluid will be permitted to pass from the high pressure tank 42 into the interior of the cylinder 33 between the piston 32 and the end of the cylinder, the fluid pressure forcing the cylinder 33 upward and with it the outer sleeve 29, plug 30, bracket 37 and all the chair parts attached thereto. To lower the chair, the control valve 44 is turned in the opposite direction whereupon the weight of the chair will force the fluid from the cylinder 33 back through conduit 41 to the valve 44 where it is made to flow into a bleeder line or conduit 50 leading to the low pressure tank 45, thus relieving pressure upon the cylinder and permitting the chair parts to be lowered.

The outer sleeve 29 is rotatable about the inner sleeve 28 thus permitting the entire chair to be rotated on the base. The pedestal 14 is comprised of an inner skirt 51 having its upper end connected to the chair seat portion and movable therewith, and an outer skirt 52 shaped to fit over the inner skirt 51. The outer skirt is fixedly carried by the outer ends of brackets 53 (Fig. 2) connected to a plate member 54 which is fitted over the upright 27 and rotatable thereabout. A machined track 55 is formed on the supporting member 26 to provide a satisfactory bearing surface upon which the plate member 54 is adapted to move and a retaining ring 56 is mounted in a circumferential groove in the upright 27 adjacent the upper surface of the plate member 54 to maintain the plate member 54 in proper relation to the supporting plate 26. The inner skirt 51, being connected to the chair seat, is thus movable vertically therewith within the outer skirt 52.

Since it may be desired at times to use a manually operated lifting device for raising and lowering the chair to the desired position, there is also provided a pump 57 (Fig. 12) which is located within the pedestal 14 on a bracket 58 bolted or otherwise fixedly connected to the plate member 54. The pump 57 carries a connecting member 59 which has a vertically disposed rod 60 connected thereto as by bolts 61, the rod having its lower end slidably located within an opening in a lug 62 formed on the sleeve 29. The pump 57 carries a reciprocable plunger 63 having one end pivotally connected by a link 64 to the short arm of a lever 65, the lever being pinned to a shaft 66 rotatably mounted in the bracket 58. The long arm of the lever 65 extends rearwardly and projects slightly through an opening in the pedestal 14 so that it may be manually operated. The pump 57 has conventional valve arrangements 68 and 69 associated therewith whereby the hydraulic fluid will be permitted to enter the chamber 67 through valve 68 and upon manual operation of the lever 65 will be forced through valve 69 into the conduit 41 (Fig. 2) to lift the chair in the same manner as with the electrically controlled pump.

The chair seat and back are supported upon a frame 70 (Fig. 2) which is attached by bolts 71 to a base 72, which base is provided with a pair of spaced attachment portions 73 which are connected by conventional means such as studs 75 for pivotal movement upon a pair of upwardly extending supporting arms 74 formed on the bracket 37 carried by the plug 30 of the chair lifting device. The frame 70 and base 72 through the pivotal connections with the arms 74 are adapted to revolve about the axes of the studs 75.

The base 72 is provided with a pair of spaced downwardly extending portions 76 adjacent one end which rotatably support the ends of a shaft 77. A piston rod 78 has one end pinned or otherwise fixedly secured to the shaft 77 and has its other end carrying the usual piston 79 reciprocably positioned within a cylinder 80, which cylinder is pivotally connected by a bracket and pin connection 81 to the outer sleeve 29. A conduit 82 has one end in communication with the chamber in the cylinder 80 above the piston 79 and has its other end connected with the high pressure tank 42 through a control valve 83 (Fig. 13). Thus, to tilt the frame 70 the control valve 83 will be turned to allow hydraulic fluid to enter the cylinder 80 from tank 42 and to force downwardly the piston 79 and with it the piston rod 78. This will cause the frame and its associated parts to swing about the pivot point 75. Upon turning the control valve 83 in the opposite direction, the weight of the person occupying the chair will cause the frame 70 to return to its normal position, rotating about the pivot point 75 in the reverse direction to pull the piston rod 78 and piston 79 upwardly, thus expelling the fluid into the conduit 82 and subsequently

through the bleeder line 59 into the low pressure tank 45.

The chair seat portion is provided with the usual appointments such as the pad 84 and side panels 85 for enclosing the working parts of the device.

The chair back 20 is attached to and consequently is movable with the chair seat 15. However, the back 20 may be adjusted independently of the seat to provide proper support for the patient in various positions.

In Fig. 3 the chair seat and back are shown in various positions, the dot and dash lines indicating the back only tilted, and the dotted outline indicating both the seat and back inclined.

The chair back 20 includes a pair of box-like members 86 which are each pivotally connected by short shafts 87 (Figs. 2 and 3), to spaced lugs 88 formed on a rearwardly extending portion 89 of the seat base 72. A vertically extending side bar 90 is positioned for sliding movement in each member 86 and for pivotal movement about the axes of the shafts 87 upon operation of a hydraulic piston 91 (Figs. 2 and 13).

The piston 91 comprises a cylinder 92 having an extension 93 formed on one end, which extension 93 is positioned within a depending boss 94 on the seat base 72 and pinned or otherwise fixedly connected thereto. Within the cylinder 92 is the conventional piston disc 95 which is attached to and adapted to reciprocate upon movement of a piston rod 96 which carries on its outer rearwardly extending end a toothed rack 97. The rack 97 is operatively engaged by the teeth of a pinion 98 rotatably carried by a shaft 99 supported by the base 72, the rack 97 being held in engagement with the pinion 98 by means such as roller 100. Thus, upon operation of the piston 91, the pinion 98 will be rotated about the axis of the shaft 99.

To the shaft 99 are pinned or otherwise fixedly attached the inner ends of a pair of spaced arms 101 which are rotatable with the shaft 99 and which are each respectively pivotally connected to the lower ends of the side bars 90. Thus, upon rotation of the pinion 98 and shaft 99 the lower ends of the side bars 90, which support the chair back, are drawn downwardly and inwardly as indicated by arc line 102 in Figs. 2 and 3.

The piston 91 is operatively controlled by a valve 103 which can be turned to allow fluid 43 under high pressure to pass from the tank 42 (Fig. 13) through conduits 41 and 104 to the cylinder 92 where it will urge the piston rod 96 inwardly to operate pinion 98 and thereby incline the chair back to the desired angle. When it is desired to return the back to normal position, the control valve 103 will be turned in the opposite direction whereupon fluid under high pressure will flow through conduit 104*a* into the cylinder 92 to urge the piston outwardly and the fluid previously forced into the cylinder will be released from high pressure and urged outwardly through conduits 104 and 59 to the low pressure tank 45. It is to be noted that when the fluid is forced through the conduits 41 and 104 to urge the piston rod 96 inwardly, the fluid in the cylinder rearwardly of the piston disc 95 will be forced outwardly through the conduits 104*a* and 59 back to the low pressure tank 45.

The chair back is enclosed by front and rear panels 105 and 106 respectively (Figs. 5 and 6), the panels each being provided with longitudinal grooved portions adjacent each side thereof whereby they may be slid vertically on the side bars 90. The panels are also provided with spaced aligned inwardly projecting lugs 107 through which bolts are extended for maintaining the panels in relative position for simultaneous sliding movement on the bars 90.

The front panel 105 is provided with a pair of spaced forwardly extending lugs 108, each carrying a short shaft 109 to which are pivotally connected rearwardly extending lugs 110 formed on a back rest 111 having suitably attached thereto a conventional pad 112. The front panel 105 is provided with an integral inwardly extending bracket portion 113 (Figs. 4 and 5) which has a vertical bore 114 in which is reciprocally positioned a shaft 115. The shaft 115 carries at its lower end a toothed block 116 which is adapted to engage the teeth of a rack 117 pivotally attached to and extending rearwardly of the back rest 111. A coiled tension spring 118 is provided over the shaft 115 within the bore 114 and is adapted to continually urge the block 116 downwardly to maintain it in desired engagement with the rack 117. Conventional means may be provided for maintaining the rack and block in constant engagement with one another such as by providing a roller 119 having end portions carried by the respective front and rear panels. To lift the block 116 upwardly out of engagement with the rack 117, there is provided a handle 120 which extends through an opening in the rear panel 106 and has its inner end pivotally connected by a link 121 to a portion of the front panel 105. The handle 120 is also pivoted at 122 to the upper end of the shaft 115. Thus, upon manually lifting handle 120, the shaft 115 will consequently be raised to lift the block 116 out of engagement with the rack 117, whereupon the back rest 111 can be tilted about the horizontal axis of shafts 109 to the desired inclined position. Then upon release of handle 120 the tension spring 118 will urge the block 116 downwardly into engagement with the rack 117 to retain the back rest in adjusted position.

Means also is provided for raising or lowering the back rest and comprises a pair of spaced vertically extending parallel members 123, the upper ends of which are connected to the opposed ends of the pivot member 122. Between the lower ends of the parallel members 123 are positioned a pair of spaced upwardly extending portions 126 of a yoke 125, the portions 126 being connected by a pin member 124, which member has its end portions positioned in vertical slots 126*a* provided in each of the parallel members 123. Thus, the members 123 can be moved as a unit in a vertical direction upon operation of handle 120 within the limits permitted by slots 126*a*. The lower end of the yoke 125 is provided with integral tabs or flanges 125*a* which are adapted to be positioned beneath a transversely extending metallic leaf spring member 127. The yoke 125 is adapted to rest upon the upper surface of the leaf spring 127 as shown best in Fig. 5. The ends of the leaf spring 127 are adapted to engage the inner surfaces of the side bars 90 to prevent the panels 105 and 106 together with the back rest 111 from lowering. However, when the handle 120 is operated to draw the shaft 115 upwardly, the parallel members 123 will consequently be simultaneously moved upwardly until the bottom ends of the slots 126*a* engage the pin member 124. Then, upon continued raising of the handle 120, the parallel members 123 will lift the yoke 125 caus-

ing the ends of the leaf spring 127 to engage the pins 127a and 127b and flex, as shown in Fig. 4, whereupon the ends of the leaf spring will be disengaged from the side bars 90 permitting the panels 105 and 106 and back rest 111 to be raised or lowered as desired. Then, upon releasing the handle 120, the leaf spring 127 will return the parts to their normal locked positions.

The chair arms 18 and 19 are each substantially U-shaped and have one leg portion provided with an upholstered pad or the like 128, while the opposed leg portion is adapted to extend through openings in the rear ends of the panels 85. An operating shaft 129 extending transversely beneath the chair seat has one end extending through an opening in one of the downwardly extending side portions 130 of a panel forming a part of the seat frame 70, which end portion is threaded for reception of a handle 131, a bushing 132 being provided over the shaft 129 and in engagement with the inner end of the handle 131. The other end of the bushing 132 engages a clamp 133 which is shaped to have a portion partially encircling the chair arm 18 and an end portion adapted to engage an inwardly turned lip 134 formed integral with the depending portion 130 of the frame 70. The other end of the shaft 129 is attached as by a bolt 135 or the like to an end of a clamp 136 which similarly engages the chair arm 19 and a lip 134 formed on the opposed depending portion 130 of the frame. The frame 70 is also provided with downwardly extending bearing portions 137 which are grooved to form bearing surfaces for the arms 18 and 19, as shown in Fig. 9. Upon rotating the handle 131 onto the shaft 129, pressure can be brought to bear upon the bushing 132 which will in turn exert pressure upon the upper end of the clamp 133 and simultaneously cause the upper end of the clamp 136 to be drawn toward clamp 133, which action will cause the clamps to firmly engage the arms 18 and 19 and prevent them from moving. However, upon rotating the handle 131 in the opposite direction, pressure can be released upon the arms 18 and 19, whereupon they may be adjusted.

With the clamps released, the patient or chair operator can, upon grasping one or both of the arms 18 and 19, spread them to the extent permitted by a slot 138 formed in the side portion 130 (Fig. 10) through which extends a stop button 139 carried by one arm of a lever 140. The lever 140 is rotatably mounted over the chair arm 18 and is provided with an upwardly extending portion 141 to which is pivotally connected a differential arm 142. The portion of the lever 140 carrying the button 139 is provided with a central bore in which is slidably disposed a pin 143 having its outer end fixedly secured to the button 139 and having its inner end shaped to fit within an opening provided therefor in the arm 18. The pin is further provided with an enlarged portion 143a which is adapted to be engaged by one end of a coil tension spring 144 positioned within the bore over the pin 142. Thus, by manually pulling outwardly the button 139, the chair operator can cause the pin 143 to become disengaged from the arm 18, permitting the arm to rotate independently of the arm 19. The arm 19 is, however, provided with a push button device 145 similar to the push button 139, enabling it also to be independently moved.

However, in moving the arms only the slight extent necessary for many conditions, it is merely necessary, as described, to loosen the handle 131 which will release clamps 133 and 136 and permit the arm 18 to rotate to the extent where the push button 139 will engage the bottom of the slot 138 preventing further lowering of the arm. Mechanism is provided, however, whereby the arm 19 will be simultaneously adjusted and comprises a toothed portion 146 formed on the end of the differential arm 142 and in engagement with a pinion gear 147, and a toothed portion 148 of a second differential arm 149 which is connected to a lever (not shown) carrying the push button 145. Therefore, the arms 18 and 19 may be simultaneously adjusted slightly or may be independently permitted to swing 180° downwardly, if desired.

The upper end of the chair back carries a head rest supporting member 151 to which the head rest device 21 is attached. The supporting member 151 is provided with a pair of spaced upwardly extending lugs 152 (Figs. 1 and 5) which are connected by a fixed shaft 153. Rotatably mounted over the shaft 153 between the lugs 152 is a bifurcated end portion 154 of a rearwardly extending supporting arm 155, the slot 156 between the bifurcations communicating with the bore in which the shaft 153 is located. The supporting arm 155 is provided with a bifurcated outer end portion 157 similar to the portion 154 and having a supporting shaft 158 rotatably mounted therethrough, the slot 159 therein communicating with the bore in which the shaft 153 resides similarly to the slot 156. A pair of rearwardly extending locking arms 160 are attached at one end to the outer bifurcation 162 of the end portion 157 of the supporting arm 155 by means such as a pin 161, extend longitudinally of the arm 155 through slots provided in the inner bifurcation 162a of the end portion 157 and have their inner ends connected by a stud 163. Between the inner ends of the locking arms 160 is provided one end of a handle 164, the handle being mounted over and rotatable with the stud 163. Each end of the stud 163 is formed with extensions 165 which are off axis with respect to the major portion of the stud and have rotatably secured thereover the inner ends of a pair of longitudinally extending locking arms 166. The forward ends of the arms 166 are attached to the outer bifurcation 167 of the arm end portion 154 by means such as pin 168, the arms 166 being slidable in grooves formed in the inner bifurcation 167a.

Upon rotation of the handle 164 about the axis of the stud 163, as indicated by numeral 169, the paired arms 160 and 166 can, due to the "off axis" connection, be moved toward and away from one another. When the handle 164 is moved rearwardly about the axis 169, the paired locking arms 160 and 166 are adapted to move so as to exert a pulling influence upon the bifurcated portions to which they are attached, causing said portions to become firmly clamped over the respective shafts 153 and 158, rendering them immovable.

The supporting shaft 158 has spaced lugs 170 of an upper supporting arm 171 fixedly secured thereto for rotation therewith, the opposed ends of the upper supporting arm 171 have head rest pads 172 adjustably secured thereto in any conventional manner. Thus, it will be understood that upon moving handle 164 toward the forward end of the lower supporting arm 155, the pressure upon the shafts 153 and 158 is relieved whereby the arms 155 and 171 can be adjusted,

as desired, to comfortably support a patient's head, whereupon the handle 164 can be moved in the opposite direction to cause the shafts 153 and 158 to become firmly clamped in the manner described to retain the arms 155 and 171 in adjusted position. It is important to note that the handle 164 is movable only in a direction parallel to the longitudinal axis of the supporting arm 155 and cannot be moved otherwise so as not to extend horizontally of the device where the clothing or person of the operator or patient can accidently come in contact with it.

The apron 16 of the chair is provided with a downwardly extending supporting member 173 on each side thereof, and fixedly secured thereto as by screws 174. The rear edges of the members 173 are provided with a plurality of teeth 175 (Fig. 11) which are adapted to be engaged by teeth 176 formed on the curved ends of supporting side portions 177, the side portions 177 being supported upon the forward edges of the depending members 173 by an integral cross member 178 connecting the portions 177. The footrest 17, of which the side portions 177 form a part, is provided with a suitable covering 179 and is adjustable vertically along the members 173 by tilting the outer end of the footrest 17 upwardly to disengage the teeth 176 from the teeth 175, whereupon the device can be adjusted upwardly or downwardly, as desired, and then, upon lowering the outer end thereof and permitting the teeth 175 and 176 to be engaged and the cross member 178 to engage the forward edges of the members 173, the device can be retained in adjusted position.

From the foregoing, it will be seen that there is provided an adjustable chair which can be quickly and easily raised or lowered upon operation of simple and efficient hydraulic controls, the individual parts of the chair being adjustable alone or in combination as described upon further operation of said hydraulic controls.

Although the novel features of the invention have been described and are pointed out in the annexed claims, it will be understood that many changes may be made in the construction and arrangement of parts shown and described without departing from the spirit of the invention as expressed in the accompanying claims. Therefore, it is to be understood that all matter set forth or shown in the accompanying drawings is to be interpreted as illustrative and not in a limiting sense.

Having described my invention, I claim:

1. A chair having in combination a supporting structure, a seat carried by said supporting structure, a back adjustably secured to said seat, said seat having a guideway pivotally connected to its rearward end and said back having a supporting member slidably positioned within said guideway for movement in the plane of the back and approximately normal to the axis of the pivotal connection of the guideway, said axis being substantially adjacent to and parallel with the intersection of the planes in which said seat and back lie, a piston cylinder carried by said seat and a piston rod reciprocable in said cylinder, a toothed rack carried by said piston rod, a gear wheel carried by said seat and operatively engaged with said rack, and an operating arm having one end connected to the gear wheel for axial rotation therewith and having its opposed end pivotally connected to said supporting member at a location below the axis of said guideway, the axes of the two connections of said operating arm being approximately parallel with the axis of the pivotal connection of the guideway, and hydraulic means for reciprocating said piston rod in said cylinder to permit said supporting member to be drawn downwardly within said guideway and simultaneously inclined about the pivotal connection of the guideway to the seat and the reverse comprising a supply tank containing hydraulic fluid under high pressure and operatively connected to said piston cylinder, a receiving tank connected to said piston cylinder, and a control valve for controlling the flow of said hydraulic fluid whereby upon operation thereof said fluid will flow under high pressure from said supply tank to one side of the piston in said cylinder to change the inclining of said back in one direction, and upon further operation of the control valve said fluid will flow from the piston cylinder to the receiving tank to change the inclining of said back in the reverse direction.

2. In an adjustable chair the combination of a base carrying supporting structure, a seat pivotally mounted on said structure, a back pivotally connected to said seat adjacent the rear thereof, and control means for automatically adjusting said back relative to said seat about said pivotal connection and the seat and back as a unit relative to the supporting structure including a supply tank carried by said supporting structure for fluid held under pressure, a receiving tank carried by said structure, and a control valve therebetween controlling the flow of fluid from the supply tank to the receiving tank, a piston mounted on the base, a cylinder mounted thereover for reciprocal movement in a vertical direction and carrying said supporting structure having the seat pivotally mounted thereon, a second cylinder carried by the supporting structure, a piston reciprocally mounted in said second cylinder and operatively connected with said seat at a location spaced from its pivotal connection with the supporting structure, a third cylinder mounted on said seat, a piston reciprocally mounted therein and operatively connected with said back below its pivotal connection with the seat, and lead lines connecting each of said cylinders with said control valve whereby the adjustments of said back and seat will be under the control of said control valve.

3. An adjustable chair of the character described for receiving a patient to be examined comprising a base, a seat and a back therefor, said base containing a first tank containing fluid under high pressure and a low pressure tank connected by a pair of conduits to form a complete circuit, means in the conduit leading to the high pressure tank for maintaining pressure in said high pressure tank at a desired level, and valve means on the conduit leading from the high pressure tank for controlling the exit of fluid from said high pressure tank, a piston carried by said base, a cylinder movably mounted over the piston for vertical movement, a lead line from said valve means to said cylinder permitting the flow of fluid to raise the cylinder and lower it under the control of the valve means, said seat being pivotally mounted on said vertically movable cylinder for tilting movement about a horizontal axis located below the seat and in rearward offset relation to the cylinder, a second cylinder carried by said first cylinder and connected with said valve means, a piston mounted for reciprocal movement in said cylinder and connected to the seat at a location spaced from its pivotal mount of the first cylinder for tilting of the seat and back as a

unit about said axis under the control of said valve means, said back having depending portions slidably disposed in guideways mounted on the seat for pivotal movement about a second axis disposed approximately parallel to said horizontal axis about which the seat and back are tiltable as a unit and located adjacent the intersection of the planes in which said seat and back lie, and a third cylinder carried by said seat and connected by a pair of lead lines to said valve means and a piston reciprocally mounted in said cylinder for movement between the connection of said lead lines with the cylinder, said piston being connected with the lower end of the depending portions of said back at a location below said guideways to permit adjustment of said back under control of the valve means, said back having means for engaging the back and head of the patient seated in said chair.

4. In a chair, the combination of a base, a seat and relatively smooth functioning means for elevating or lowering said seat relative to the base with a minimum of annoyance to a patient seated on said chair comprising a piston having a cylinder reciprocally mounted over said piston, the piston being fixed over the base in upright position and the cylinder supporting the seat, a receiving tank, a supply tank and a control valve mounted to move with said cylinder, a pair of conduits, one providing communication between the control valve and the supply tank and the other providing communication between the control valve and the receiving tank, means for delivering fluid from the receiving tank to the supply tank so as to maintain a constant predetermined pressure in said supply tank, a further conduit having one end communicating with the control valve and its other end with the interior of said cylinder, and control means located exteriorly on said seat for operating the control valve, said control valve being adjustable by said control means to open communication between the control valve and the conduit to one tank while closing communication with the conduit to the other tank whereby said control means function to cause fluid to flow into the cylinder under pressure when desired to elevate the chair and to exit from said cylinder when desired to lower the chair.

5. In a chair, the combination of a seat, supporting structure therefor, a back and means for adjusting said back relative to the seat comprising a slide carrying box pivotally attached to the rear of said seat for movement about an axis adjacent to and parallel with the intersection of the planes in which the seat and back are generally located, said back having a slide member vertically adjustable in said slide box with a free end located below said axis, a link having one end pivotally connected to said free end and its opposed end pivotally connected to the supporting structure at a location forwardly of the back and below the seat, the axes of the pivotal connections of said link at both said ends being substantially parallel with the axis of the pivotal connection of the slide box to the seat, and externally controlled means for swinging said link controlled amounts about its pivotal connection with the supporting structure whereby the back may be simultaneously tilted and lowered relative to the plane of the seat to accommodate the comfort of a patient seated in the chair.

6. In a chair, the combination of a seat, supporting structure therefor, a back and means for adjusting said back relative to the seat comprising a pair of slide carrying boxes pivotally attached to the rear of said seat adjacent its opposed sides for movement about an axis adjacent to and parallel with the intersection of the planes in which the seat and back are generally located, said back having a pair of slide members vertically adjustable in said slide boxes with a free end located below said axis, a link having one end pivotally connected to said free end and its opposed end pivotally connected to the supporting structure at a location forwardly of the back and below the seat, the axes of the pivotal connections of said link at both said ends being substantially parallel with the axis of the pivotal connection of the slide boxes to the seat, and externally controlled hydraulic means for swinging said link controlled amounts about its pivotal connection with the supporting structure whereby the back may be simultaneously tilted and lowered relative to the plane of the seat to accommodate the comfort of a patient seated in the chair.

7. In a chair, the combination of a base, a seat adapted to be raised and lowered relative to the base and to be tilted relative thereto, a back pivotally mounted on the rear of said seat, and means for obtaining said adjustments in a smooth functioning manner with a minimum of discomfort and annoyance to a patient seated in the chair, said means including a piston fixed to the base, a cylinder reciprocally mounted over said piston for vertical adjustment and carrying supporting structure, the seat being mounted over said cylinder and pivotally connected to said supporting structure at a location below and rearwardly of the center of said seat, a second cylinder carried by the first cylinder adjacent its lower end and a piston reciprocally mounted therein operatively connected with said seat at a location spaced rearwardly from its pivotal connection with the supporting structure, a third cylinder having one end secured to the seat adjacent its forward side and a piston reciprocally mounted therein for adjustment toward and away from the rear of the seat and operatively connected with the lower portion thereof, a supply tank and a receiving tank carried by said supporting structure, means for driving fluid from the receiving tank to the supply tank to maintain a constant pressure therein, conduits from each of said tanks to a control valve, and conduits from said control valve to each of said cylinders, together with control means located on the exterior side of said seat for operating said control valve, said control valve functioning under said control means to provide direct communication of the conduits, separately and plurally, with one of the tanks while cutting off communication with the other to permit a relatively smooth adjustment of the seat and back to the convenience of the operator and comfort of the patient.

8. In a chair including a base, a seat and a back for said seat, means for obtaining relative adjustments of said chair elements in a smooth functioning manner with a minimum of discomfort and annoyance to a patient seated in the chair, said means including a piston fixed to the base, a cylinder reciprocally mounted over said piston for vertical adjustment and carrying supporting structure, the seat being mounted over said cylinder and pivotally connected to said supporting structure at a location below and rearwardly of the center of said seat, a second cylinder carried by the first cylinder adjacent its lower end and a piston reciprocally mounted therein operatively connected with said seat at a location spaced

rearwardly from its pivotal connection with the supporting structure, a third cylinder having one end secured to the seat adjacent its forward side and a piston reciprocally mounted therein for adjustment toward and away from the rear of the seat and operatively connected with the lower portion thereof, a supply tank and a receiving tank carried by said supporting structure, means for driving fluid from the receiving tank to the supply tank to maintain a constant pressure therein, conduits from each of said tanks to a control valve, and conduits from said control valve to each of said cylinders, together with control means located on the exterior side of said seat for operating said control valve, said control valve functioning under said control means to provide direct communication of the conduits, separately and plurally, with one of the tanks while cutting off communication with the other to permit a relatively smooth adjustment of the seat and back to the convenience of the operator and comfort of the patient.

9. In a chair, the combination of a seat and supporting structure therefor, said seat being pivotally connected to said supporting structure for tilting movement about an axis substantially parallel with the general plane in which the seat is arranged and which axis is located in rearwardly offset relation to the center of said seat and below said plane thereof, a cylinder secured to said supporting structure adjacent its lower part, and a piston reciprocally mounted therein and connected with a operating rod in turn pivotally connected to said seat at a location rearwardly of and below said axis of the pivotal connection of the seat to the supporting structure, together with means for forcing fluid under pressure into said cylinder on the side of the piston toward the pivotal connection of its operating rod with the seat to cause the seat to tilt rearwardly in accordance with the amount of movement of the piston, the location of said pivotal connections being such that the weight of a patient seated in the chair will cause the seat to slowly return to its normal position when said fluid is allowed to exit from the cylinder.

FRANCESCO COLLURA.

References Cited in the file of this patent

UNITED STATES PATENTS

Number	Name	Date
415,307	Carrick	Nov. 19, 1889
483,807	Johnston	Oct. 4, 1892
491,098	Gould	Feb. 7, 1893
553,042	Ritter	Jan. 14, 1896
644,644	Sibley	Mar. 6, 1900
694,683	Sibley	Mar. 4, 1902
885,564	Barker et al.	Apr. 21, 1908
1,509,542	Case	Sept. 23, 1924
1,738,284	Carter	Dec. 3, 1929
1,810,134	Emmert	June 16, 1931
1,856,691	Carter	May 3, 1932
2,063,122	Richardson	Dec. 8, 1936
2,098,500	Koenigkramer et al.	Nov. 9, 1937
2,172,063	Hara	Sept. 5, 1939
2,172,797	Lewallen	Sept. 12, 1939
2,181,465	Schneider	Nov. 28, 1939
2,257,150	Beeson	Sept. 30, 1941
2,347,859	Williams	May 2, 1944
2,411,063	Scott	Nov. 12, 1946
2,416,410	Shampaine	Feb. 25, 1947
2,442,303	Mayfield	May 25, 1948
2,445,870	Maxson	July 27, 1948
2,526,248	Luketa	Oct. 17, 1950
2,533,595	Luketa	Dec. 12, 1950

FOREIGN PATENTS

Number	Country	Date
445,703	Great Britain	Apr. 15, 1936