Feb. 9, 1965 J. MERCIER ETAL 3,168,907

PRESSURE VESSEL

Filed May 17, 1962

FIG 1

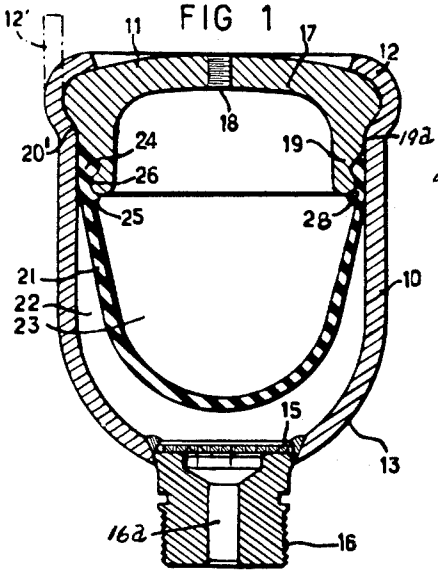

FIG 2

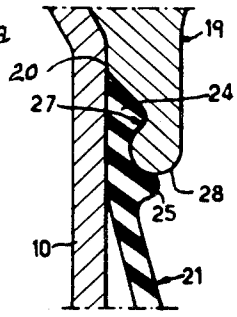

FIG 3

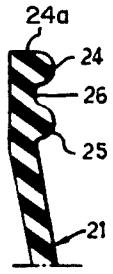

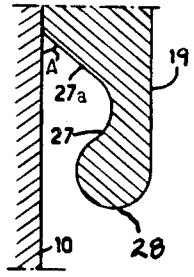

FIG 4

FIG 5

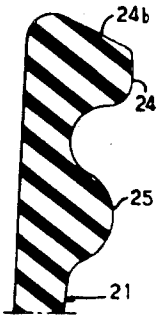

FIG 6

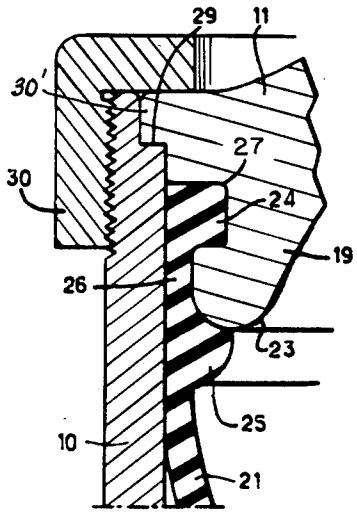

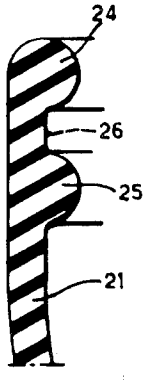

FIG 7

JEAN MERCIER AND JACQUES H. MERCIER INVENTORS

BY

DEAN, FAIRBANK & HIRSCH

ATTORNEYS

United States Patent Office 3,168,907 Patented Feb. 9, 1965

3,168,907

PRESSURE VESSEL

Jean Mercier, 1185 Park Ave., New York, N.Y., and Jacques H. Mercier, New York, N.Y.; said Jacques H. Mercier assignor to Mercier Olaer Patent Corporation, Wilmington, Del., a corporation of Delaware

Filed May 17, 1962, Ser. No. 195,456
Claims priority, application France May 30, 1961
4 Claims. (Cl. 138—30)

This invention relates to the art of pressure vessels, more particularly of the type having a flexible separator intervening between two fluids in the pressure vessel.

It is among the objects of the invention to provide a pressure vessel of the above type that may readily be fabricated at relatively low cost and may readily be assembled with assurance that the rim of the separator will be dependably retained in place, maintaining a fluid-tight seal.

According to the invention these objects are accomplished by the arrangement and combination of elements hereinafter described and more particularly recited in the claims.

In the accompanying drawings in which is shown one or more of various possible embodiments of the several features of the invention,

FIG. 1 is a longitudinal sectional view of a pressure vessel according to the invention,

FIG. 2 is a detail sectional view on an enlarged scale of the clamped portion of the mouth of the separator,

FIG. 3 is a detail sectional view of the mouth of the separator,

FIG. 4 is a detail sectional view of a portion of the closure cover of the separator,

FIG. 5 is a detail sectional view on an enlarged scale of another embodiment of the separator,

FIG. 6 is a detail sectional view on an enlarged scale of the mouth of the pressure vessel, according to another embodiment, and

FIG. 7 is a detail sectional view of the separator used in the embodiment of FIG. 6.

Referring now to the drawings, in the embodiment shown in FIG. 1, the pressure vessel comprises a container 10 of strong rigid material, such as steel, capable of withstanding high pressure. The container 10 is cylindrical along the major portion of the body thereof and has a hemispherical end 13 which has an opening 15 in which an outlet member 16 is mounted, through which fluid such as oil under pressure may flow. The cylindrical portion of the container 10 at the mouth thereof is of larger diameter than the main body of the container, defining a curved shoulder 20. The mouth of the container 10 is designed to be closed by a cover member 11 which, as shown in FIG. 1, has a slightly arched central portion 17 provided with an axial opening 18 designed to receive a suitable air connection (not shown). The periphery of the cover has a depending cylindrical portion 19 adapted to fit into the cylindrical mouth of the container 10.

As shown in FIG. 1, the periphery of the cover member 11 is curved in cross section so that its outer curved surface may rest on the correspondingly curved portion 20' of the container.

In addition, the depending portion 19 of the cover has a cylindrical portion 19*a* which fits relatively snugly in the main cylindrical portion of the container so that the cover member will be accurately centered therein.

Positioned in the container 10 is a flexible separator 21, illustratively a collapsible and expansible bladder having an enlarged mouth and which desirably is of resilient material such as rubber or synthetic plastic of like physical characteristics. The bladder 21 defines two chambers in

the pressure vessel, i.e., an oil chamber 22 which is in communication with the passageway 16*a* through the outlet member 16 and a gas chamber 23, which is in communication with the opening 18.

The mouth of the bladder 21, as is clearly shown in FIGS. 1 to 3 inclusive, has preferably formed integral therewith on its inner surface, two annular beads 24 and 25 spaced apart from each other by an intermediate zone 26 clearly shown in FIG. 3.

To support the bladder 21, the lower end of the depending portion 19 of the cover member 11 is of reduced thickness and has an annular groove 27 on its outer surface adapted to receive the annular bead 24 as is clearly shown in FIG. 2. The lower end 28 of the depending portion 19 is rounded, as is clearly shown in FIG. 2, and reacts against the bead 25, the rounding of the end 25 being preferred to prevent sharp edges that may cut the bladder 21.

As shown in FIG. 3, the width of the intermediate zone 26 of the bladder 21 is in a state of rest, when not under any tension. The zone 26 is placed under tension as shown in FIG. 2 when the bead 24 is positioned in the groove 27 and when the bead 25 is against the end 28 of the depending portion 19 of the separator.

Prior to installation of the cover member 11, the bladder is first positioned thereon so that it will be securely retained in place with the intermediate portion 26 under tension. This clearly facilitates the mounting of the cover and the bladder into the cylindrical container 10.

Thus, when the cover member with the bladder mounted thereon, is forced into the container 10, the cover member 11 will move downwardly until its curved periphery abuts against the corresponding curved periphery 20' of the container. At this time the cylindrical portion 19*a* of the depending portion 19 of the cover member will fit snugly into the container accurately centering the cover member 11 and the bladder 21 in such container.

Due to the dimensions selected of the beads and the thickness of the bladder wall, the bead 24 will be compressed into the annular groove 27 forming a seal between the junction 20 between the depending portion 19 and the adjacent wall of the container and the bead 25 will be compressed between the rounded end 28 of the cover member 11 and the adjacent wall surface of the container 10 thereby providing dependable sealing action to prevent leakage of oil or gas from the pressure vessel.

Furthermore, as the bladder 21 tends to maintain its original molded shape, shown in FIG. 3, the initial tension to the intermediate zone 26 will be maintained and hence the sealing action at junction 20 will be maintained. More particularly, any tendency to cold flow which results from the compression of the rim of the bladder between the container and the cover member and which might otherwise result in a leak is prevented due to such initial tension in accordance with the invention.

As is clearly shown in FIGS. 2 and 4, the upper portion 27*a* of the groove 27 forms, in conjunction with the adjacent side wall of the container 10, an acute angle A terminating at junction 20, which is designed to insure dependable sealing action of the bead 24 when the latter is in compressed condition.

In the embodiment shown in FIGS. 1 to 3, the upper surface 24*a* of the bladder is, when the bladder is not under compression, substantially perpendicular to the axis of the adjacent portion, i.e., without slope.

The assembly of the embodiment shown in FIGS. 1 to 3 is completed by rolling over or crimping the portion 12' of the enlarged diameter mouth 12 of the container 10 so that it snugly presses against the rounded periphery of the cover member 11, retaining such rounded por-

tion against the correspondingly curved portion 20 of the container 10.

In the embodiment of FIG. 5, the upper end 24*b* of bead 24 in uncompressed condition has a slope which is less than that of the inclined portion 27*a* of the groove 27 so that a dependable seal will still be effected.

The embodiments shown in FIGS. 6 and 7 is also similar to that shown in FIGS. 1 to 3. As shown in FIG. 7, the bead 24 is rounded not only on its inner surface, but also on the upper portion of its top surface. Except for this, the mouth of the bladder 21 shown in FIG. 7 is identical to that shown in FIGS. 1 to 3.

The depending portion 19 shown in FIG. 6 has an annular groove 27 which differs from the annular groove 27 of FIGS. 1 to 3 in that it is substantially rectangular as shown and adapted to receive the bead 24.

The mouth of the container 10 shown in FIG. 6, also differs from that shown in FIG. 1 in that the cover member 11 of FIG. 6 is retained in place by an annulus 30. Thus, as is clearly shown in FIG. 6, the upper end of the container 10 has a reduced diameter portion forming an annular seat 29 on which a corresponding annular flange 30' at the top surface of the cover member seats. The outer surface of the container 10 adjacent its mouth is threaded to receive the correspondingly threaded end of annulus 30 which is L-shaped in cross section as shown.

With the arrangement above described, due to the initial tensioning of the intermediate zone 26 of the bladder, a dependable sealing action will be maintained as soon as the bladder is installed and such sealing action will continue throughout the life of the unit.

As many changes could be made in the above construction, and many apparently widely different embodiments of this invention could be made without departing from the scope of the claims, it is intended that all matter contained in the above description or shown in the accompanying drawings shall be interpreted as illustrative and not in a limiting sense.

Having thus described our invention, what we claim as new and desire to secure by Letters Patent of the United States is:

1. A pressure vessel comprising a rigid hollow container having an enlarged diameter mouth and having a port at the other end, a cover member adapted to be positioned in the mouth of said container, said cover member having a port therein, means securely to retain said cover member in place, a flexible separator of resilient deformable material positioned in said container and intervening between said ports, said separator having two spaced annular beads near its periphery positioned on the side of the separator adjacent the port in the cover member, said cover member having a cylindrical portion extending into said container, said cylindrical portion having an annular groove on its outer surface adapted to receive the annular bead adjacent the periphery of the separator, the spacing between the depending portion and the adjacent wall surface of the container being such as to place said annular bead under lateral compression forming a seal between said depending portion and the adjacent wall of the container, the distance between said annular beads being such that when said first bead is under compression, the free end of the depending portion of said cover member will react against the second bead also maintaining the latter under compression and maintaining the intermediate zone between said annular beads under tension.

2. The combination set forth in claim 1 in which the end of said depending portion of the cover member is curved to avoid sharp angles.

3. The combination set forth in claim 1 in which the upper portion of the annular groove in the depending portion of said cover member is inclined to form an acute angle with respect to the adjacent wall surface of the container and the end of the separator when uncompressed forms a substantially right angle with respect to the adjacent wall of the separator.

4. The combination set forth in claim 1 in which the upper portion of the annular groove in the depending portion of said cover member is inclined to form an acute angle with respect to the adjacent wall surface of the container and the end of the separator when uncompressed is tapered downwardly with respect to the adjacent wall of the separator, the angle of such taper being less than the angle of inclination of the upper portion of the annular groove in said depending portion of the cover member.

References Cited in the file of this patent

UNITED STATES PATENTS

2,371,633	Lippincott	Mar. 20, 1945
2,563,257	Loukonen	Aug. 7, 1951
2,624,176	Osborne	Jan. 6, 1953
2,757,689	Knox	Aug. 7, 1956
2,764,103	Mercier	Sept. 25, 1956
2,959,194	Mercier	Nov. 8, 1960