US 20110005471A1

(19) United States

(12) Patent Application Publication

(10) Pub. No.: US 2011/0005471 A1

(43) Pub. Date: Jan. 13, 2011

Fujita et al.

(54) MOISTURE SEPARATOR REHEATER

(75) Inventors: **Issaku Fujita**, Hyogo (JP); **Teruaki Sakata**, Hyogo (JP)

Correspondence Address:
KANESAKA BERNER AND PARTNERS LLP
1700 DIAGONAL RD, SUITE 310
ALEXANDRIA, VA 22314-2848 (US)

(73) Assignee: **MITSUBISHI HEAVY INDUSTRIES ,LTD.**, Tokyo (JP)

(21) Appl. No.: **12/667,255**

(22) PCT Filed: **Sep. 3, 2008**

(86) PCT No.: **PCT/JP2008/065806**

§ 371 (c)(1),
(2), (4) Date: **Mar. 2, 2010**

(30) **Foreign Application Priority Data**

Sep. 7, 2007 (JP) 2007-232198

Publication Classification

(51) **Int. Cl.**
F22G 1/16 (2006.01)
F22B 37/26 (2006.01)

(52) **U.S. Cl.** **122/483**

(57) **ABSTRACT**

A moisture separator reheater (**100**) includes a shell body (**111**) having provided therein a steam receiving chamber (**111***a*) having steam receiving openings (**112***a*, **112***b*) for receiving steam (**1**), a supply manifold chamber (**111***b*) communicating with the steam receiving chamber (**111***a*), a moisture separation chamber (**111***c*) communicating with the supply manifold chamber (**111***b*) and separating moisture from the steam (**1**), a heating chamber (**111***d*) communicating with the moisture separation chamber (**111***c*) and heating the steam (**1**), and a collection manifold chamber (**111***e*) being disposed adjacent to the steam receiving chamber (**111***a*), communicating with the heating chamber (**111***d*), and having steam discharge openings (**120***a* to **120***c*) for discharging the steam (**1**). The moisture separator reheater (**100**) further includes heat-conduction reducing means for reducing heat conduction between the adjacent sections respectively of the steam receiving chamber (**111***a*) and the collection manifold chamber (**111***e*) of the shell body (**111**).

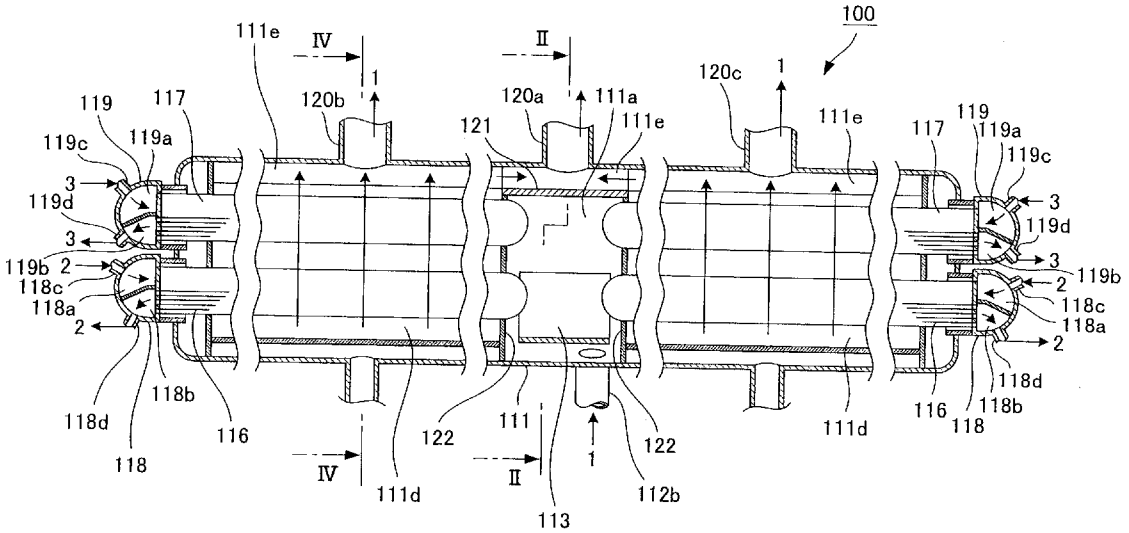

[FIG. 1]

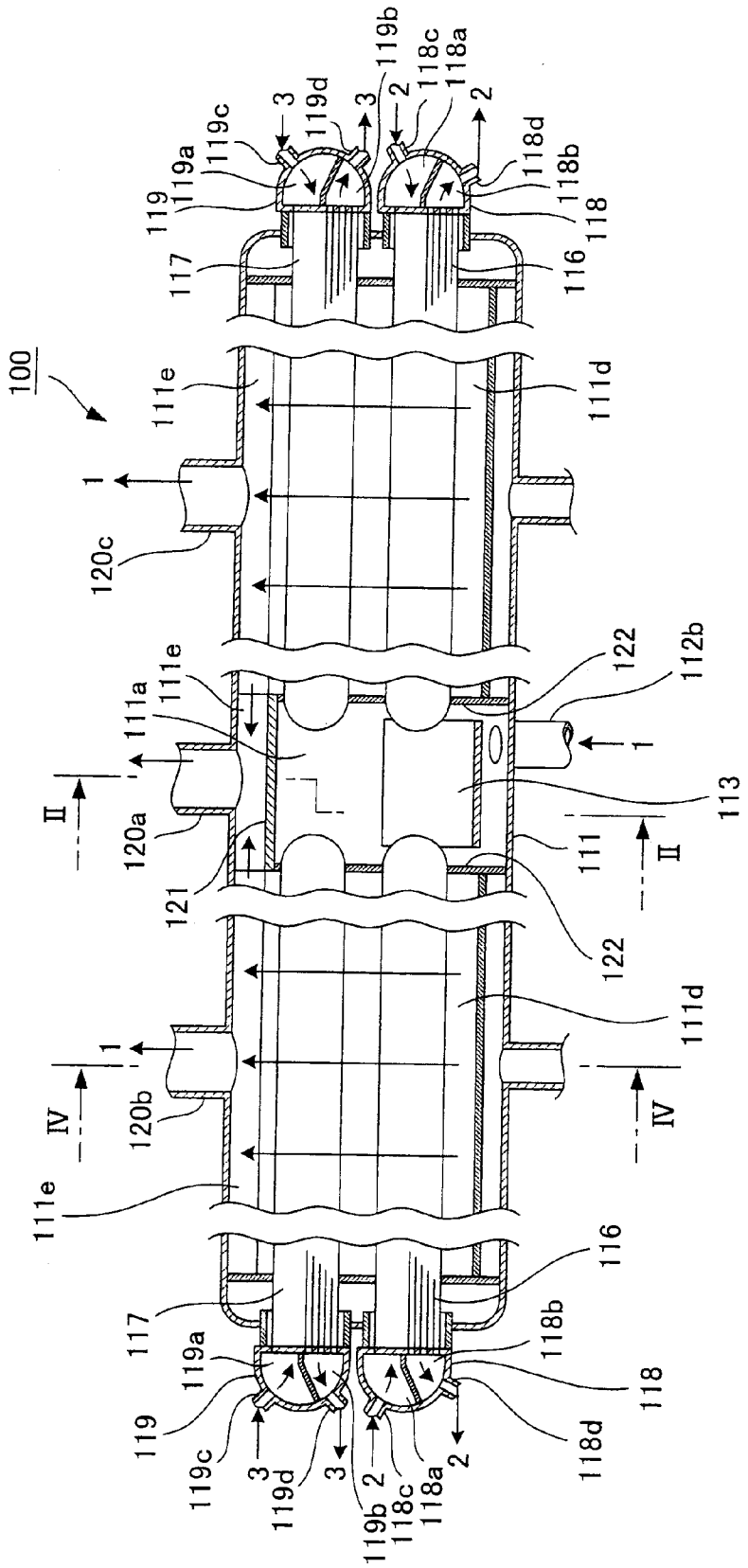
100
111e
111d
120c
1
120a
111a
II
121
122
112b
113
111
120b
IV
117
116
118
118a
118b
118c
118d
119
119a
119b
119c
119d
2
3

[FIG. 2]

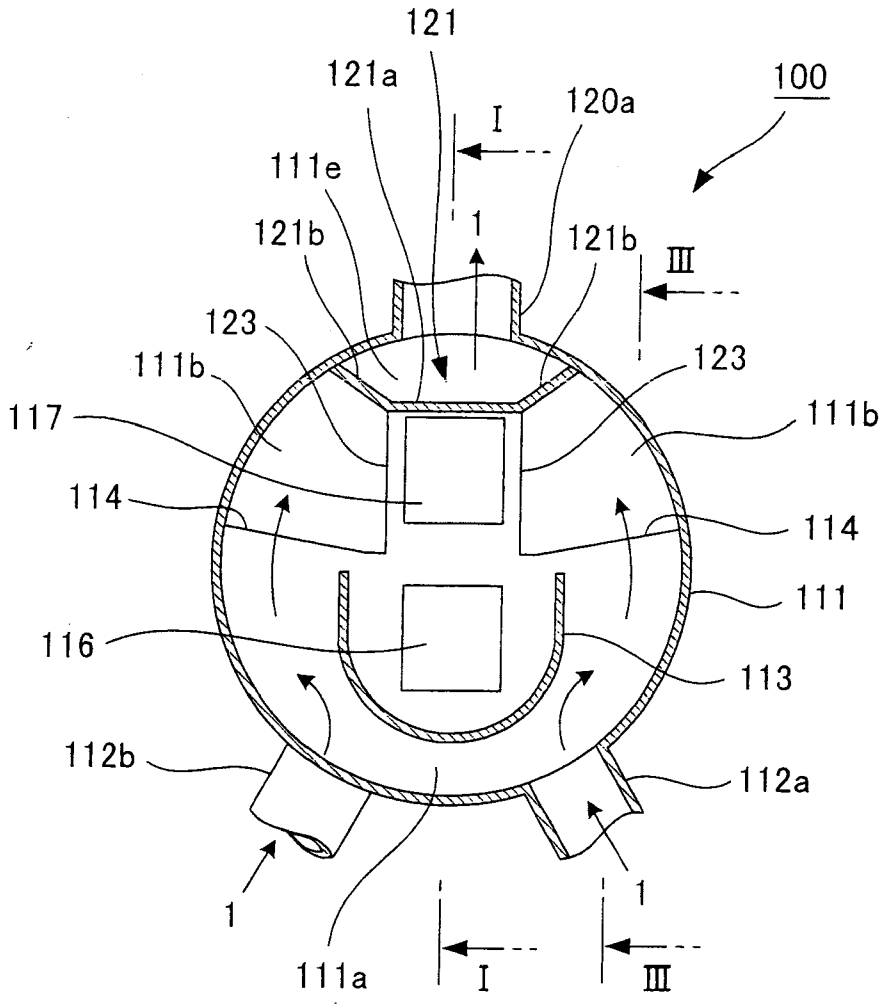
121
121a
100
120a
I
111e
1
121b
121b
III
123
123
111b
111b
117
114
114
111
116
113
112b
112a
1
1
111a
I
III

[FIG. 3]

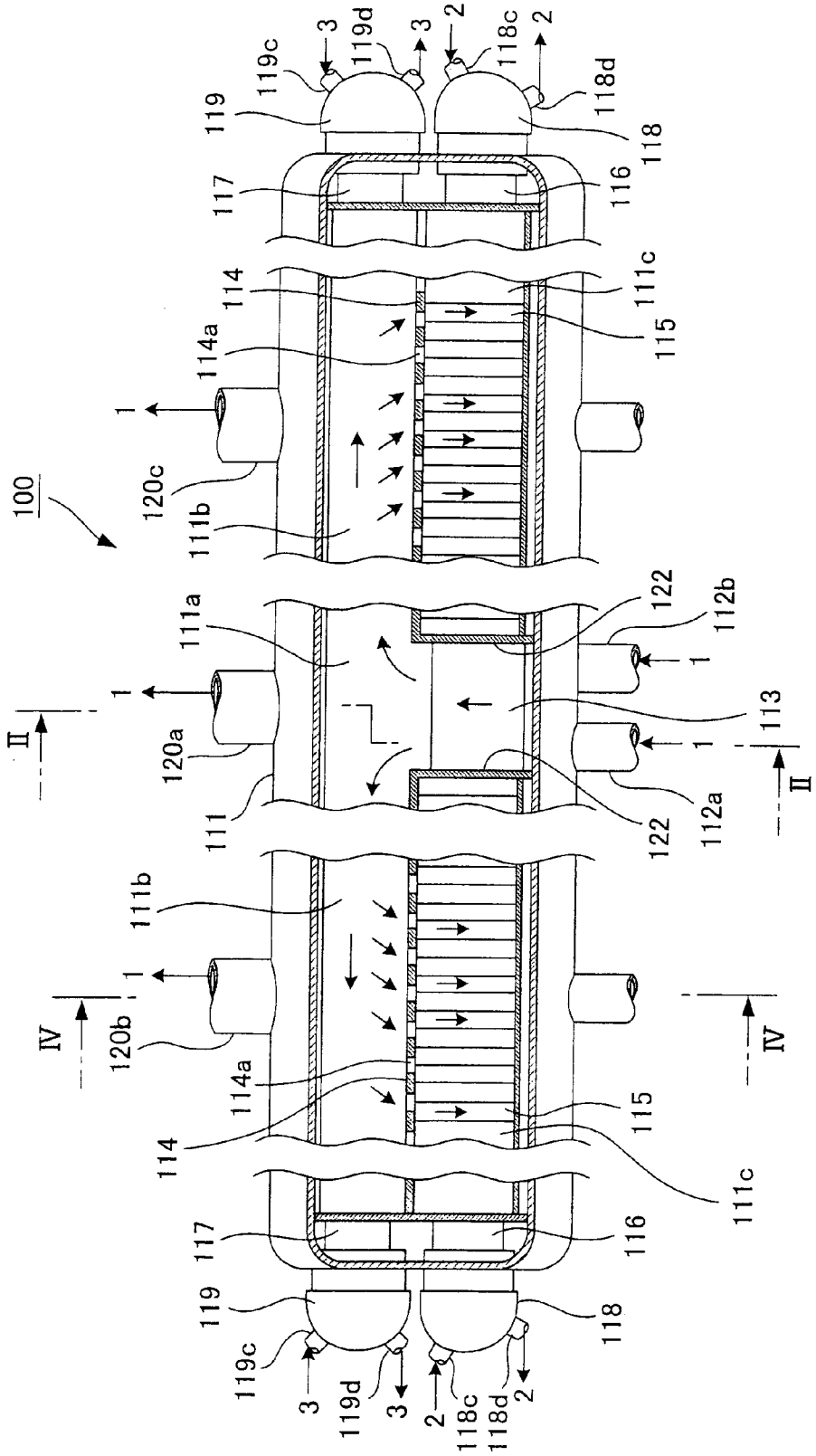
100
119
119c
119d
118
118c
118d
117
116
114
114a
115
111c
111b
120c
1
2
3
111a
122
112b
113
112a
120a
111
II
120b
IV

[FIG. 4]

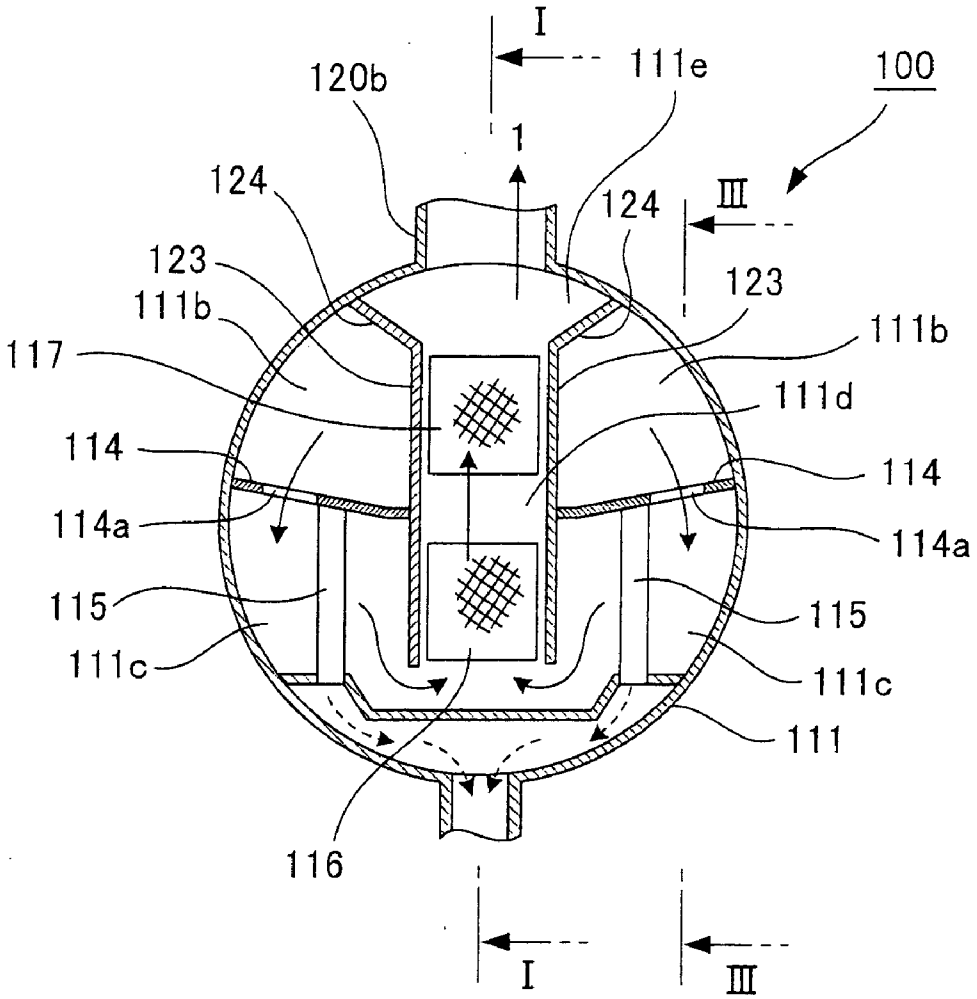
I
111e
100
120b
1
124
124
III
123
123
111b
111b
117
111d
114
114
114a
114a
115
115
111c
111c
111
116
I
III

[FIG. 5]

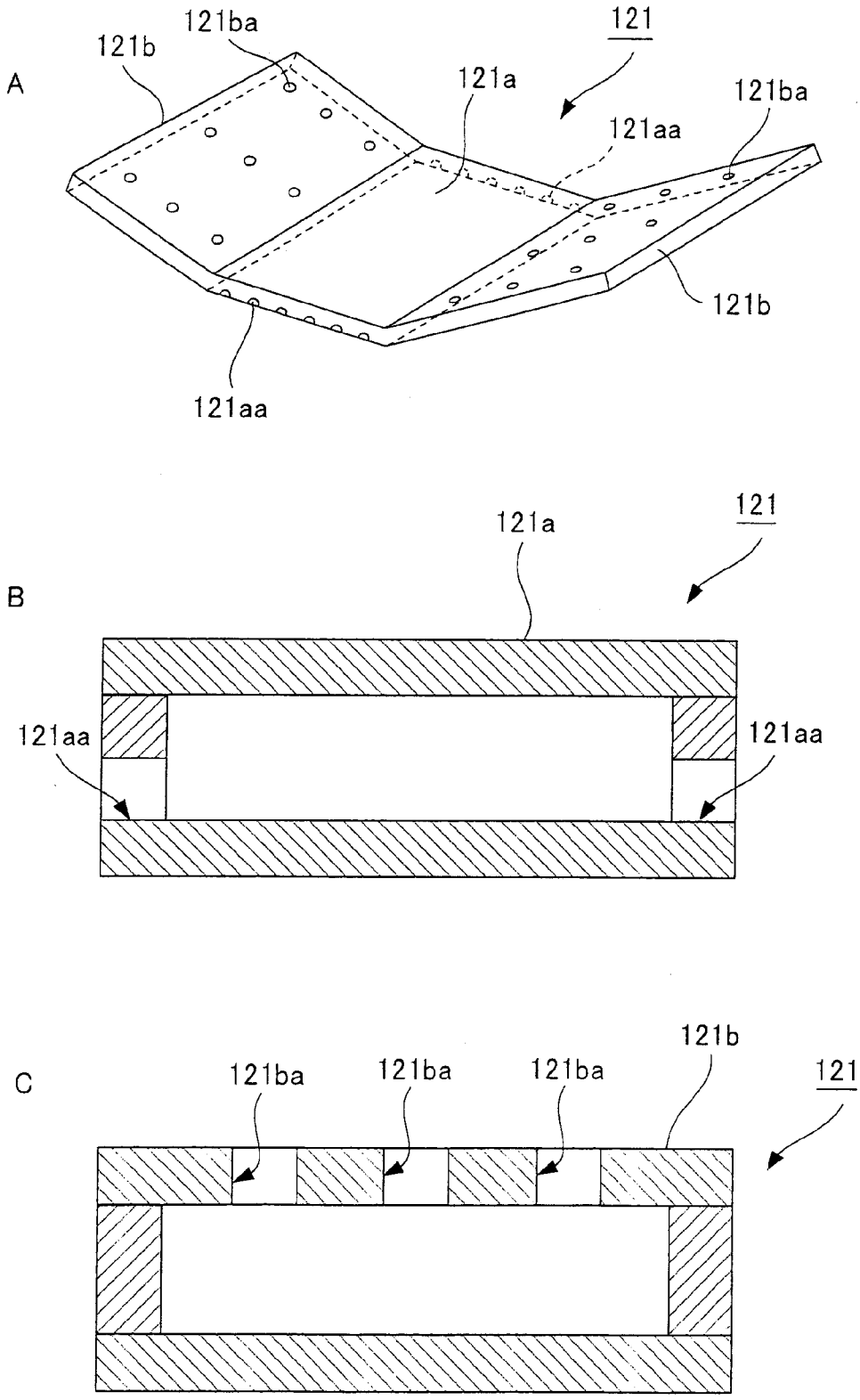
A
121b
121ba
121
121a
121ba
121aa
121b
121aa
B
121a
121
121aa
121aa
C
121b
121ba
121ba
121ba
121

[FIG. 6]

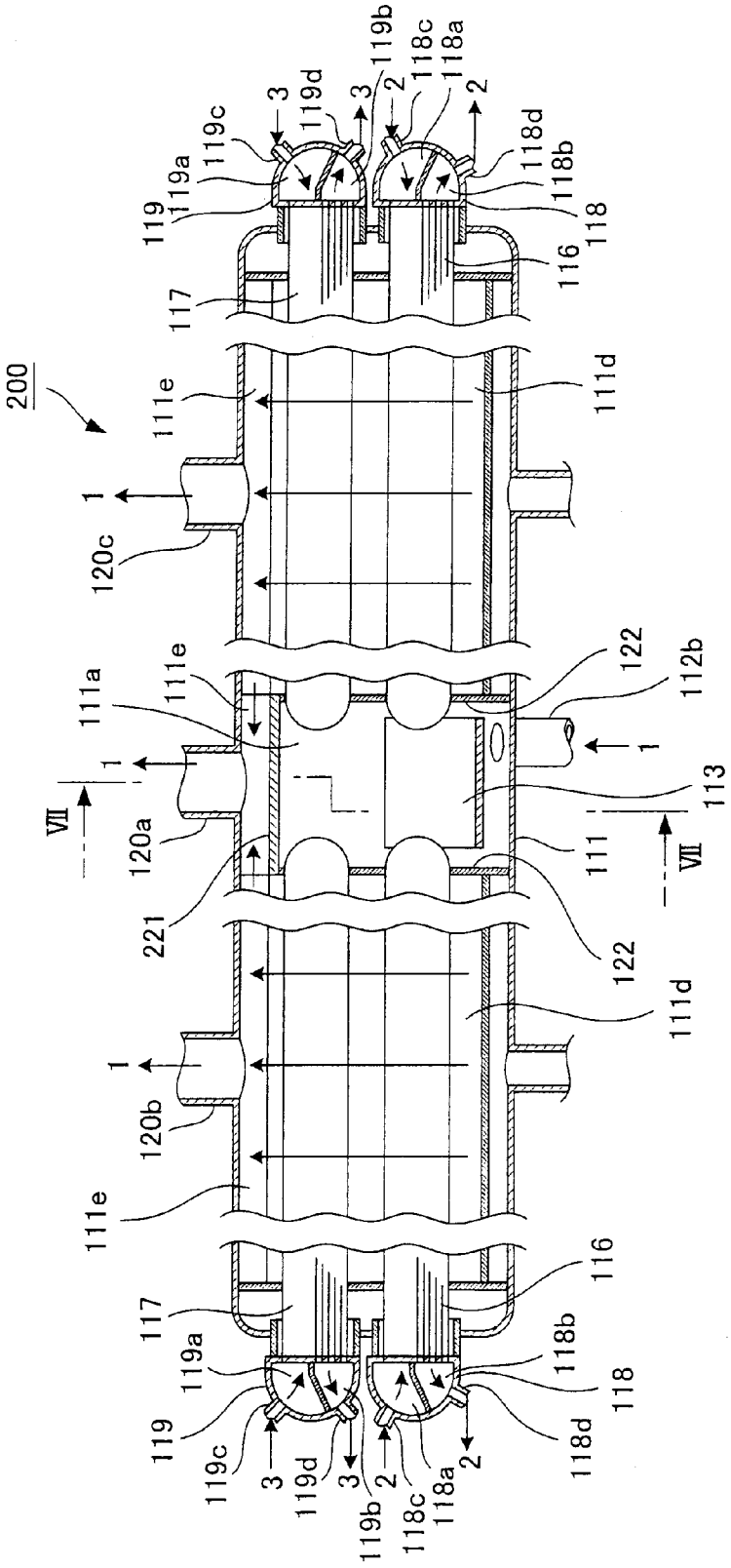
200
119
119a
119c
3
119d
3
119b
2
118c
118a
2
118d
118b
118
116
117
111e
111d
1
120c
111a
111e
122
112b
1
VII
120a
221
113
111
VII
122
111d
1
120b
111e
116
117
119a
118b
118
119
119c
3
119d
3
119b
2
118c
118a
2
118d

[FIG. 7]

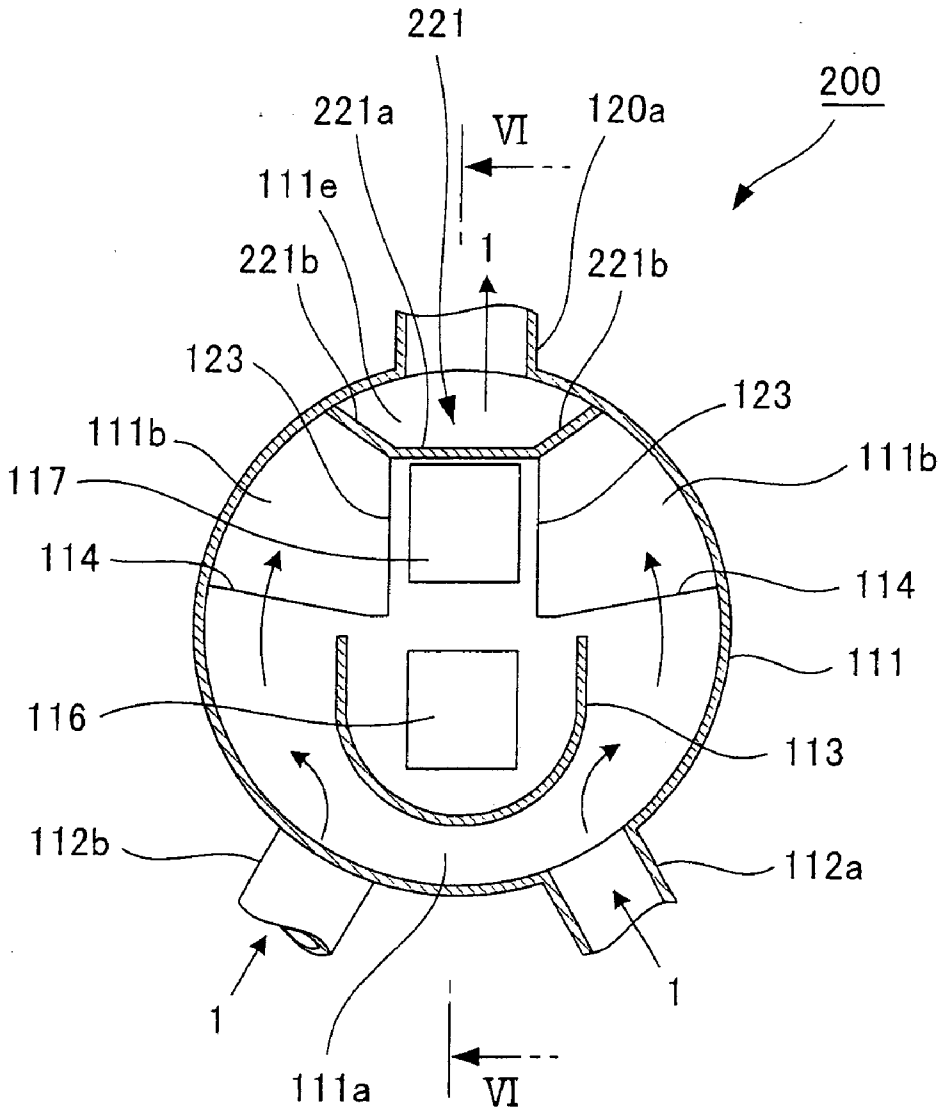
221
200
221a
VI
120a
111e
1
221b
221b
123
123
111b
111b
117
114
114
111
116
113
112b
112a
1
1
111a
VI

[FIG. 8]

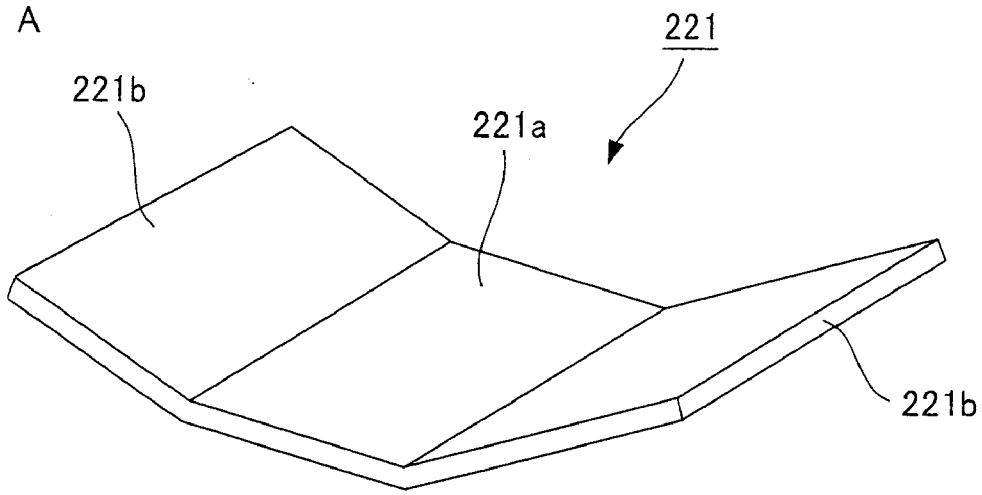

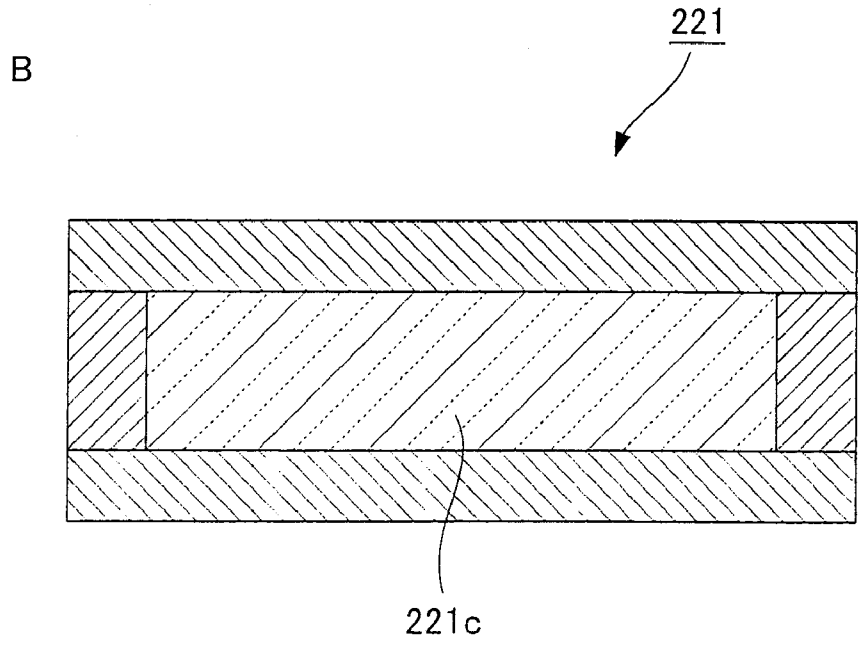

[FIG. 9]

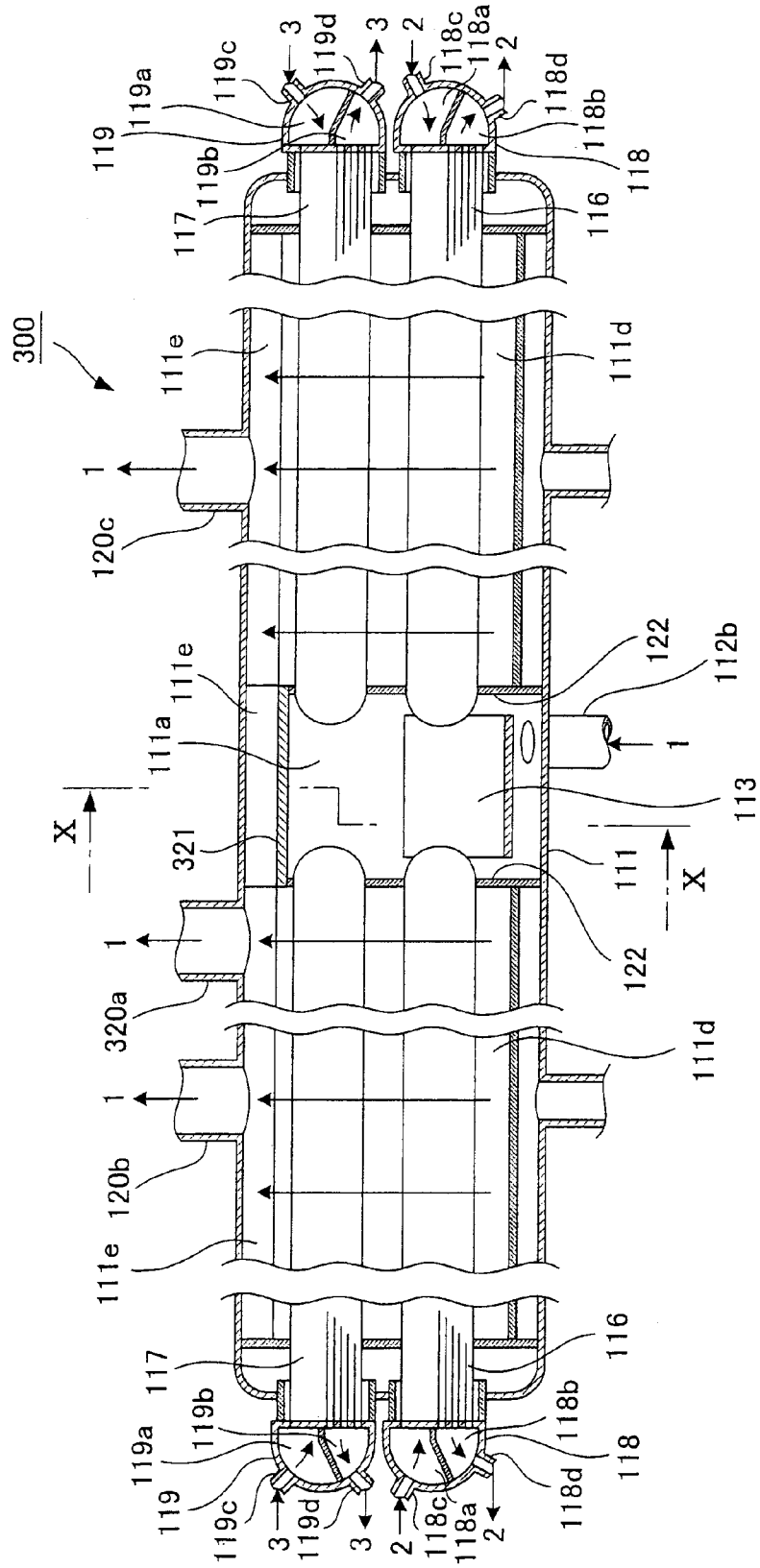
300
119
119a
119b
119c
119d
117
116
118
118a
118b
118c
118d
111
111a
111d
111e
112b
113
120b
120c
122
320a
321
X
1
2
3

[FIG. 10]

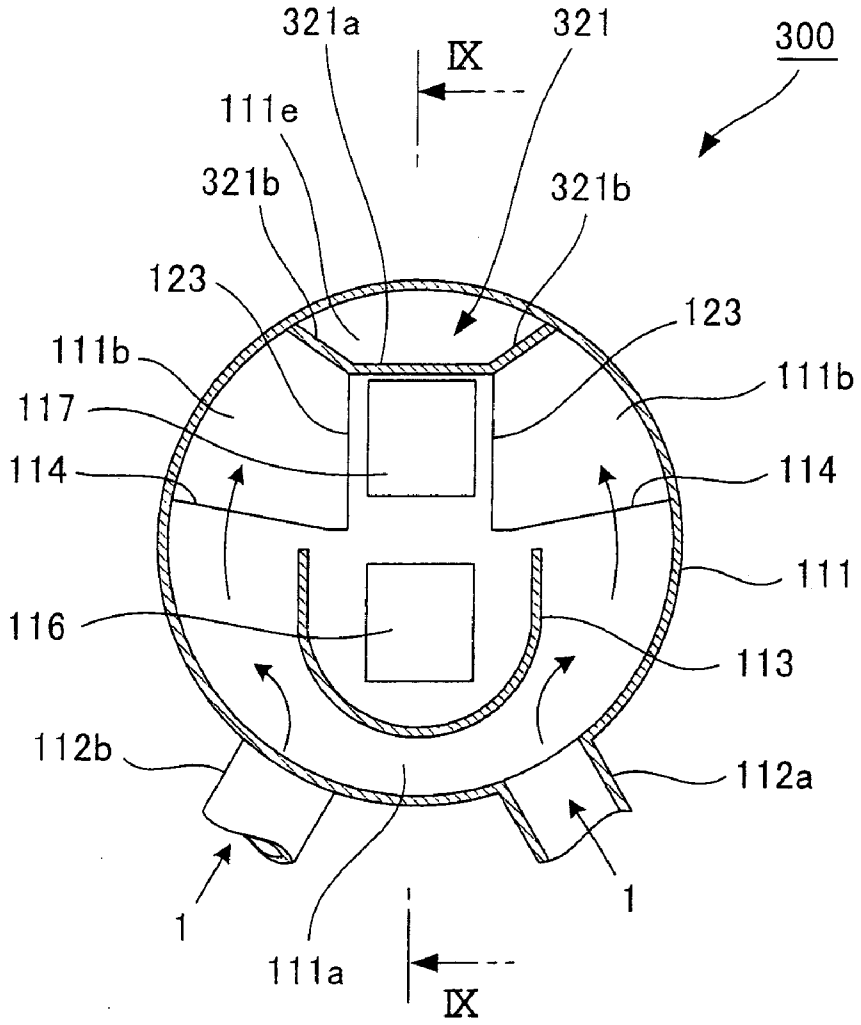
321a
321
300
IX
111e
321b
321b
123
123
111b
111b
117
114
114
111
116
113
112b
112a
1
1
111a
IX

MOISTURE SEPARATOR REHEATER

TECHNICAL FIELD

[0001] The present invention relates to a moisture separator reheater for generating superheated steam by separating moisture from steam and heating the steam. In particular, the present invention is extremely effective in nuclear power plants when implemented for utilizing steam that has been used in a high-pressure steam turbine, again in low-pressure steam turbines.

BACKGROUND ART

[0002] In a nuclear power plant, steam used in a high-pressure steam turbine is used again in a low-pressure steam turbine. If the steam contains moisture (around 12%), this causes not only erosion of turbine blades but also a decrease in thermal efficiency of the turbine. Accordingly, a moisture separator reheater is used which generates superheated steam by separating moisture from the steam discharged from the high-pressure steam turbine (moisture content is reduced to approximately 0.1%) and heating the steam, and which feeds the superheated steam to the low-pressure steam turbines.

[0003] As such a moisture separator reheater, a two-stage reheat one has been known, for example, such as described in Patent Document 1 below. In this double-reheat moisture separator reheater, steam from a high-pressure steam turbine flows into a steam receiving chamber in a horizontal and cylindrical shell body through a steam receiving opening provided in a lower central portion of the shell body, collides with a baffle plate, divides into two directions toward two axial end sides of the shell body to rise, flows into supply manifold chambers provided on each of the two axial end sides of the shell body, flows into moisture separation chambers through slits of distributor plates, and undergoes moisture separation in mist separators.

[0004] The steam from which moisture has been separated flows into a heating chamber provided in a portion containing the central axis of the shell body, undergoes first-stage heating in first-stage heater tube groups and then second-stage heating in second-stage heater tube groups, and is thereafter sent out to a low-pressure steam turbine from a steam delivery opening provided in an axially central portion of an upper portion of the shell body.

[0005] PATENT DOCUMENT **1**: JP-A-7-301691

DISCLOSURE OF INVENTION

Problems to be Solved by the Invention

[0006] With regard to a moisture separator reheater such as described above, a structure described below has been studied. Specifically, a heating chamber provided in a portion containing the central axis of a shell body is divided into two chambers on two axial end sides of the shell body. Over the heating chambers, a collection manifold chamber communicating throughout the axial length of the shell body is provided. Moreover, a partition plate is provided in a way to separate the respective sections of the collection manifold chamber and the steam receiving chamber. Further, a plurality of (e.g., three) steam delivery openings in an upper portion of the shell body are provided in the axial direction of the shell body.

[0007] However, in the above-described structure, the steam receiving chamber through which low-temperature steam circulates and the collection manifold chamber through which high-temperature steam circulates are adjacent to each other with the partition plate interposed therebetween. Accordingly, pre-reheated steam fed into the steam receiving chamber decreases the temperature of steam near the partition plate, i.e., in a space part, adjacent to the steam receiving chamber, in the collection manifold chamber.

[0008] Thus, in such a structure as described above, the temperature of steam sent out from the steam delivery opening located above the partition plate, i.e., located in an axially central portion of the shell body and connected to a space part adjacent to the steam receiving chamber, is lower than the temperature of steam sent out from the steam delivery openings located on the two axial end sides of the shell body. Accordingly, there is the problem of the decrease in thermal efficiency of a low-pressure steam turbine fed with the steam from the steam delivery opening located in the axially central portion of the shell body.

[0009] Against such circumstances, an object of the present invention is to provide a moisture separator reheater which can prevent a decrease in temperature of steam sent out.

Means for Solving the Problems

[0010] In order to solve the above-described problems, a moisture separator reheater according to a first invention comprises a shell body provided inside with: a steam receiving chamber having a steam receiving opening for receiving steam; a supply manifold chamber communicating with the steam receiving chamber; a moisture separation chamber communicating with the supply manifold chamber and separating moisture from the steam; a heating chamber communicating with the moisture separation chamber and heating the steam; and a collection manifold chamber being disposed adjacent to the steam receiving chamber, communicating with the heating chamber, and having a steam discharge opening for discharging the steam. The moisture separator reheater is characterized by comprising heat-conduction reducing means for reducing heat conduction between the adjacent sections respectively of the steam receiving chamber and the collection manifold chamber of the shell body.

[0011] A moisture separator reheater according to a second invention is characterized in that in the first invention, the heat-conduction reducing means is a hollow partition member disposed to separate the adjacent sections respectively of the steam receiving chamber and the collection manifold chamber, and the partition member has communicating holes allowing the collection manifold chamber and an inside of the partition member to communicate with each other so as to receive therein the steam circulating in the collection manifold chamber and to return the received steam to the collection manifold chamber.

[0012] A moisture separator reheater according to a third invention is characterized in that in the first invention, the heat-conduction reducing means is a partition member which has a heat insulating layer therein and which is disposed to separate the adjacent sections respectively of the steam receiving chamber and the collection manifold chamber.

[0013] A moisture separator reheater according to a fourth invention is characterized in that in the first invention, the heat-conduction reducing means is an arrangement of the steam discharge opening, and the steam discharge opening is

connected only to a space part of the collection manifold chamber other than a space part adjacent to the steam receiving chamber.

EFFECTS OF THE INVENTION

[0014] In a moisture separator reheater according to the present invention, since the heat-conduction reducing means reduces the heat conduction between the adjacent sections respectively of the steam receiving chamber and the collection manifold chamber of the shell body, a decrease in temperature of steam sent out from a steam delivery opening can be prevented.

BRIEF DESCRIPTION OF DRAWINGS

[0015] FIG. **1** is a view schematically showing the configuration of a first embodiment of a moisture separator reheater according to the present invention and showing a cross section containing the central axis thereof.

[0016] FIG. **2** is a cross-sectional view taken along line II-II in FIG. **1** as seen in the direction of arrows II.

[0017] FIG. **3** is a cross-sectional view taken along line III-III in FIG. **2** as seen in the direction of arrows III.

[0018] FIG. **4** is a cross-sectional view taken along line IV-IV in FIG. **1** as seen in the direction of arrows IV.

[0019] FIG. **5** is a schematic diagram showing the configuration of a crown plate in FIGS. **1** and **2**.

[0020] FIG. **6** is a view schematically showing the configuration of a second embodiment of a moisture separator reheater according to the present invention and showing a cross section containing the central axis thereof.

[0021] FIG. **7** is a cross-sectional view taken along line VII-VII in FIG. **6** as seen in the direction of arrows VII.

[0022] FIG. **8** is a schematic diagram showing the configuration of a crown plate in FIGS. **6** and **7**.

[0023] FIG. **9** is a view schematically showing the configuration of a third embodiment of a moisture separator reheater according to the present invention and showing a cross section containing the central axis thereof.

[0024] FIG. **10** is a cross-sectional view taken along line X-X in FIG. **9** as seen in the direction of arrows X.

BEST MODE FOR CARRYING OUT THE INVENTION

[0025] Hereinafter, embodiments of a moisture separator reheater according to the present invention will be described with reference to the drawings.

[0026] However, the following embodiments do not limit the present invention.

First Embodiment

[0027] Hereinafter, a first embodiment of a moisture separator reheater according to the present invention will be described with reference to FIGS. **1** to **5**. FIG. **1** is a view schematically showing the configuration of the moisture separator reheater and showing a cross section containing the central axis thereof. FIG. **2** is a cross-sectional view taken along line II-II in FIG. **1** as seen in the direction of arrows II. FIG. **3** is a cross-sectional view taken along line III-III in FIG. **2** as seen in the direction of arrows III. FIG. **4** is a cross-sectional view taken along line IV-IV in FIG. **1** as seen in the direction of arrows IV. FIG. **5** is a schematic diagram showing the configuration of a crown plate in FIGS. **1** and **2**.

[0028] As shown in FIGS. **1** to **3**, a cylindrical shell body **111** is oriented so that the axis thereof may be directed in a horizontal direction, and a steam receiving chamber **111***a* is formed in an axially central portion, except an upper portion, of the inside of the shell body **111**. In a lower portion of the axially central portion of the shell body **111**, a plurality of steam receiving openings **112***a* and **112***b* are provided which feed steam **1** discharged from a high-pressure steam turbine to the inside of the steam receiving chamber **111***a*. Inside the steam receiving chamber **111***a*, a U-shaped baffle plate (buffer plate) **113** is disposed which guides the flow of the steam **1** while alleviating the impact of the steam **1** from the steam receiving openings **112***a* and **112***b*.

[0029] As shown in FIGS. **2** to **4**, on each of the axial two ends of the inside of the shell body **111**, supply manifold chambers **111***b* communicating with the steam receiving chamber **111***a* are formed in radially outer portions of the inside of the shell body **111** on the upper side thereof except an upper portion thereof. Each of lower portions of these supply manifold chambers **111***b* is a distributor plate **114** having a large number of slits **114***a* formed therein.

[0030] On each of the two axial end sides of the inside of the shell body **111**, moisture separation chambers **111***c* are formed in radially outer portions of the inside of the shell body **111** on the lower side thereof, i.e., under the supply manifold chambers **111***b*. Inside each of these moisture separation chambers **111***c*, a mist separator **115** connected to the slits **114***a* of the distributor plate **114** is disposed.

[0031] As shown in FIGS. **1** and **4**, on each of the two axial end sides of the inside of the shell body **111**, a heating chamber **111***d* communicating with the moisture separation chambers **111***c* is formed in a radially inner portion of the inside of the shell body **111**, i.e., in a region surrounded by the supply manifold chambers **111***b* and the moisture separation chambers **111***c*. On the lower side of the inside of each of the heating chambers **111***d*, a U-shaped first-stage heater tube group **116** is disposed so that a tube end portion thereof may be directed toward an axial end portion of the shell body **111**. On the upper side of the inside of each of the heating chambers **111***d*, a U-shaped second-stage heater tube group **117** is disposed so that a tube end portion thereof may be directed toward an axial end portion of the shell body **111**.

[0032] On each of the axial two end sides of the inside of the shell body **111**, a first-stage heater steam chamber **118** having the inside thereof partitioned into a distributing chamber **118***a* and a collection chamber **118***b* is provided in a radially inner portion of the inside of the shell body **111** on the lower side thereof. On each of the two axial end sides of the shell body **111**, a second-stage heater steam chamber **119** having the inside thereof partitioned into a distributing chamber **119***a* and a collection chamber **119***b* is provided in a radially inner portion of the inside of the shell body **111** on the upper side thereof.

[0033] In the distributing chambers **118***a* and **119***a* of the heater steam chambers **118** and **119**, steam supply openings **118***c* and **119***c* supplied with steams **2** and **3** for heating are provided, respectively. In the collection chambers **118***b* and **119***b* of the heater steam chambers **118** and **119**, steam discharge openings **118***d* and **119***d* for discharging the steams **2** and **3** used for heating are provided, respectively.

[0034] To the distributing chambers **118***a* of the first-stage heater steam chambers **118**, one tube end portions of the first-stage heater tube groups **116** are connected, respectively. To the collection chambers **118***b* of the first-stage heater

steam chambers **118**, the other tube end portions of the first-stage heater tube groups **116** are connected, respectively. To the distributing chambers **119***a* of the second-stage heater steam chambers **119**, one tube end portions of the second-stage heater tube groups **117** are connected, respectively. To the collection chambers **119***b* of the second-stage heater steam chambers **119**, the other tube end portions of the second-stage heater tube groups **117** are connected, respectively.

[0035] As shown in FIGS. **1**, **2**, and **4**, in an upper portion of the inside of the shell body **111**, a collection manifold chamber **111***e* communicating with the heating chambers **111***d* is formed continuously in the axial direction of the shell body ill. In the two axial end sides and the axially central portion of an upper portion of the shell body **111**, steam delivery openings **120***a* to **120***c* are provided which communicate with the collection manifold chamber **111***e* to send out the steam **1** to low-pressure steam turbines, respectively.

[0036] As shown in FIGS. **1**, **2**, and **5**, the adjacent sections respectively of the steam receiving chamber **111***a* in the axially central portion of the inside of the shell body **111** and the collection manifold chamber **111***e* are partitioned by a crown plate **121**. The crown plate **121** is a hollow partition member, and serves as heat-conduction reducing means. The crown plate **121** includes a horizontal plate **121***a* and a tilted plate **121***b* which is on each of two sides of the horizontal plate **121***a* with respect to the radial direction of the shell body **111** so that outer portions of the shell body **111** with respect to the radial direction thereof may be located upward.

[0037] In each of two end side surfaces of the horizontal plate **121***a* of the crown plate **121** with respect to the axial direction of the shell body **111**, a plurality of first communicating holes **121***aa* are formed to allow the inside of the crown plate **121** and the collection manifold chamber **111***e* to communicate with each other. Each of the first communicating holes **121***aa* is formed to be located at the same height as the lower inner surface of the horizontal plate **121***a*. In each of the upper surfaces of the tilted plates **121***b* of the crown plate **121**, a plurality of second communicating holes **121***ba* are formed to allow the inside of the crown plate **121** and the collection manifold chamber **111***e* to communicate with each other. The above-described first and second communicating holes **121***aa* and **121***ba* constitute communicating holes in this embodiment.

[0038] It should be noted that in the drawings, **122** denotes partition plates for separating the steam receiving chamber **111***a* from the moisture separation chambers **111***c* and the heating chambers **111***d*, **123** denotes partition plates for separating the supply manifold chambers **111***b* from the heating chambers **111***d*, and **124** denotes tilted plates for separating the supply manifold chambers **111***b* from the collection manifold chamber **111***e*.

[0039] Next, the operation of the above-described moisture separator reheater **100** according to this embodiment will be described.

[0040] When the steam **1** discharged from the high-pressure steam turbine is fed through the steam receiving openings **112***a* and **112***b* to the steam receiving chamber **111***a* in the shell body **111**, the steam **1** is guided while an impact thereof is alleviated by the baffle plate **113**, and flows into the supply manifold chamber **111***b*.

[0041] The steam **1** which has flowed into the supply manifold chamber **111***b* passes through the slits **114***a* of the distributor plates **114** to circulate through the mist separators **115** in the moisture separation chambers **111***c*, thus undergoing moisture separation, and thereafter flows into the heating chambers **111***d*.

[0042] The steam **1** which has flowed into the heating chambers **111***d* comes in contact with the first-stage heater tube groups **116** to be heated by the steam **2** for heating which has entered the first-stage heater tube groups **116** through the steam supply openings **118***c* of the first-stage heater steam chambers **118**, passes through the distributing chambers **118***a*, and circulates in the first-stage heater tube groups **116**. Then, the steam **1** comes in contact with the second-stage heater tube groups **117** to be further heated by the steam **3** for heating which has entered the second-stage heater tube groups **117** through the steam supply openings **119***c* of second-stage heater steam chambers **119**, passes through the distributing chambers **119***a*, and circulates in the second-stage heater tube groups **117**. Thereafter, the steam **1** flows into the collection manifold chamber **111***e*.

[0043] The steam **1** which has flowed into the collection manifold chamber ille circulates in the collection manifold chamber ille, and is sent out from the steam delivery openings **120***a* to **120***c* to be fed to the low-pressure steam turbines, respectively.

[0044] A very small portion of the steam **1** circulating in the collection manifold chamber ille enters the inside of the crown plate **121** through the communicating holes **121***aa* and **121***ba* of the crown plate **121** to form a heat insulating layer. Thus, the crown plate **121** can greatly reduce the heat conduction between the adjacent sections respectively of the steam receiving chamber **111***a* and the collection manifold chamber **111***e*.

[0045] Accordingly, the temperature of the steam **1** sent out from the steam delivery opening **120***a* which is located above the crown plate **121** in the axially central portion of the shell body **111**, i.e., which is connected to a space part adjacent to the steam receiving chamber **111***a*, can be prevented from decreasing to below the temperature of the steam **1** sent out from the steam delivery openings **120***b* and **120***c* located on the two axial end sides of the shell body **111**.

[0046] Thus, the moisture separator reheater **100** according to this embodiment makes it possible to prevent a decrease in temperature of the steam **1** sent out from the steam delivery opening **120***a*, and therefore makes it possible to prevent a decrease in thermal efficiency of the low-pressure steam turbine fed with the steam **1** from the steam delivery opening **120***a*.

[0047] Moreover, since the first communicating holes **121***aa* of the crown plate **121** are formed to be located at the same height as the lower inner surface of the horizontal plate **121***a*, even if a decrease in temperature due to a stoppage of the operation produces a drain inside the crown plate **121**, the drain flows to the outside through the first communicating holes **121***aa*. Accordingly, the drain can be prevented from being trapped in the crown plate **121**.

[0048] Moreover, since the second communicating holes **121***ba* of the crown plate **121** are formed in the upper surfaces of the tilted plates **121***b*, even in the event of a slight drain being trapped in the crown plate **121** and vaporizing as temperature increases due to a resumption of the operation, the drain flows to the outside through the second communicating holes **121***ba*. Accordingly, the dilation deformation of the crown plate **121** can be prevented.

Second Embodiment

[0049] Hereinafter, a second embodiment of a moisture separator reheater according to the present invention will be

described with reference to FIGS. **6** to **8**. FIG. **6** is a view schematically showing the configuration of the moisture separator reheater and showing a cross section containing the central axis thereof. FIG. **7** is a cross-sectional view taken along line VII-VII in FIG. **6** as seen in the direction of arrows VII. FIG. **8** is a schematic diagram showing the configuration of a crown plate in FIGS. **6** and **7**. It should be noted that components similar to those of the above-described first embodiment are denoted by reference numerals similar to those used in the description of the above-described first embodiment, and the same descriptions as the corresponding descriptions of the above-described first embodiment are not repeated here.

[0050] As shown in FIGS. **6** to **8**, the adjacent sections respectively of the steam receiving chamber **111***a* in the shell body **111** and the collection manifold chamber **111***e* are partitioned by a crown plate **221**. The crown plate **221** is a partition member, and serves as heat-conduction reducing means. The crown plate **221** includes a horizontal plate **221***a* and a tilted plate **221***b* which is on each of two sides of the horizontal plate **221***a* with respect to the radial direction of the shell body **111** so that outer portions of the shell body **111** with respect to the radial direction thereof may be located upward. In this crown plate **221**, a heat insulating layer **221***c* is provided which is made of heat insulating material such as glass wool, felt, or the like.

[0051] In a moisture separator reheater **200** according to this embodiment which includes the above-described crown plate **221**, as in the aforementioned first embodiment, the steam **1** discharged from the high-pressure steam turbine can be fed to the low-pressure steam turbines through the steam delivery openings **120***a* to **120***c*, respectively, after being fed to the inside of the shell body **111** through the steam receiving opening **112***a* and **112***b* to undergo moisture separation in the mist separators **115** of the moisture separation chambers **111***c* and then being heated by the heater tube groups **116** and **117** of the heating chambers **111***d*.

[0052] The adjacent sections respectively of the steam receiving chamber **111***a* in the shell body **111** and the collection manifold chamber **111***e* are partitioned by the crown plate **221** having the heat insulating layer **221***c* therein. Thus, the crown plate **221** can greatly reduce the heat conduction between the adjacent sections respectively of the steam receiving chamber **111***a* and the collection manifold chamber **111***e*.

[0053] Accordingly, the temperature of the steam **1** sent out from the steam delivery opening **120***a* which is located above the crown plate **221** in the axially central portion of the shell body **111**, i.e., which is connected to a space part adjacent to the steam receiving chamber **111***a*, can be prevented from decreasing to below the temperature of the steam **1** sent out from the steam delivery openings **120***b* and **120***c* located on the two axial end sides of the shell body **11**.

[0054] Thus, as in the aforementioned first embodiment, the moisture separator reheater **200** according to this embodiment makes it possible to prevent a decrease in temperature of the steam **1** sent out from the steam delivery opening **120***a*, and therefore makes it possible to prevent a decrease in thermal efficiency of the low-pressure steam turbine fed with the steam **1** from the steam delivery opening **120***a*.

[0055] It should be noted that, in this embodiment, a description has been made on a case where the crown plate **221** having provided therein the heat insulating layer **221***c* made of heat insulating material is employed; however, in other embodiments, it is possible to employ, for example, a crown plate having provided therein a heat insulating layer formed by a hollow air space part, a crown plate having a vacuum heat insulating layer provided therein, or the like.

Third Embodiment

[0056] Hereinafter, a third embodiment of a moisture separator reheater according to the present invention will be described with reference to FIGS. **9** and **10**. FIG. **9** is a view schematically showing the configuration of the moisture separator reheater and showing a cross section containing the central axis thereof. FIG. **10** is a cross-sectional view taken along line X-X in FIG. **9** as seen in the direction of arrows X. It should be noted that components similar to those of the aforementioned first and second embodiments are denoted by reference numerals similar to those used in the description of the aforementioned first and second embodiments, and the same descriptions as the corresponding descriptions of the aforementioned first and second embodiments are not repeated here.

[0057] As shown in FIGS. **9** and **10**, the respective sections of the steam receiving chamber **111***a* in the shell body **111** and the collection manifold chamber **111***e* are separated by a crown plate **321**. The crown plate **321** includes a horizontal plate **321***a* and a tilted plate **321***b* which is on each of two sides of the horizontal plate **321***a* with respect to the radial direction of the shell body **111** so that outer portions thereof with respect to the radial direction of the shell body **111** may be located upward. The crown plate **321** has a configuration similar to that of the crown plate **21** of the conventional moisture separator reheater.

[0058] In a near-center portion of an upper portion of the shell body ill, a steam delivery opening **320***a* which communicates with the collection manifold chamber **111***e* to send out the steam **1** to a low-pressure steam turbine is provided in a region other than a part over the crown plate **321**.

[0059] In other words, in the moisture separator reheater **300** according to this embodiment, the steam delivery openings **120***b*, **120***c*, and **320***a* are connected only to a space part in the collection manifold chamber **111***e* other than a space part therein adjacent to the steam receiving chamber **111***a*.

[0060] In the moisture separator reheater **300** according to this embodiment which includes the above-described steam delivery openings **120***b*, **120***c*, and **320***a*, as in the aforementioned first and second embodiments, the steam **1** discharged from the high-pressure steam turbine can be fed to the low-pressure steam turbines through the steam delivery openings **320***a*, **120***b*, and **120***c*, respectively, after being fed to the inside of the shell body **111** through the steam receiving opening **112***a* and **112***b* to undergo moisture separation in the mist separators **115** of the moisture separation chambers **111***c* and then being heated by the heater tube groups **116** and **117** of the heating chambers **111***d*.

[0061] The steam delivery opening **320***a* located near the axial center of the shell body **111** is provided in a region other than a part over the crown plate **321**. In other words, the steam delivery openings **120***b*, **120***c*, and **320***a* are connected only to a space part in the collection manifold chamber **111***e* other than a space part therein adjacent to the steam receiving chamber **111***a*. Accordingly, the velocity of the steam **1** is very low in a part of the collection manifold chamber **111***e* which is located over the crown plate **321**, i.e., in a space part in the collection manifold chamber **111***e* which is adjacent to the steam receiving chamber **111***a*. Thus, the heat conduction

between the steam receiving chamber **111***a* and the collection manifold chamber **111***e* can be greatly reduced.

[0062] Accordingly, the temperature of the steam **1** sent out from the steam delivery opening **320***a* of the shell body ill can be prevented from decreasing to below the temperature of the steam **1** sent out from the steam delivery openings **120***b* and **120***c* located on the two axial end sides of the shell body **111**.

[0063] Thus, as in the aforementioned first and second embodiments, the moisture separator reheater **300** according to this embodiment makes it possible to prevent a decrease in temperature of the steam **1** sent out from the steam delivery opening **320***a*, and therefore makes it possible to prevent a decrease in thermal efficiency of the low-pressure steam turbine fed with the steam **1** from the steam delivery opening **320***a*.

INDUSTRIAL APPLICABILITY

[0064] A moisture separator reheater according to the present invention can prevent a decrease in temperature of steam sent out from a steam delivery opening, and therefore can be used in a nuclear power plant or the like extremely effectively.

1. A moisture separator reheater including a shell body provided inside with:

a steam receiving chamber having a steam receiving opening for receiving steam;

a supply manifold chamber communicating with the steam receiving chamber;

a moisture separation chamber communicating with the supply manifold chamber and separating moisture from the steam;

a heating chamber communicating with the moisture separation chamber and heating the steam; and

a collection manifold chamber being disposed adjacent to the steam receiving chamber, communicating with the heating chamber, and having a steam discharge opening for discharging the steam,

the moisture separator reheater characterized by comprising heat-conduction reducing means for reducing heat conduction between the adjacent sections respectively of the steam receiving chamber and the collection manifold chamber of the shell body.

2. The moisture separator reheater according to claim **1**, wherein

the heat-conduction reducing means is a hollow partition member disposed to separate the adjacent sections respectively of the steam receiving chamber and the collection manifold chamber, and

the partition member has communicating holes allowing the collection manifold chamber and an inside of the partition member to communicate with each other so as to receive therein the steam circulating in the collection manifold chamber and to return the received steam to the collection manifold chamber.

3. The moisture separator reheater according to claim **1**, wherein

the heat-conduction reducing means is a partition member which has a heat insulating layer therein and which is disposed to separate the adjacent sections respectively of the steam receiving chamber and the collection manifold chamber.

4. The moisture separator reheater according to claim **1**, wherein

the heat-conduction reducing means is an arrangement of the steam discharge opening, and

the steam discharge opening is connected only to a space part of the collection manifold chamber other than a space part adjacent to the steam receiving chamber.

* * * * *