(No Model.) 4 Sheets—Sheet 1.

E. F. HOWLDEN.

APPARATUS FOR CONTROLLING GAS SUPPLY ON RAILWAY TRAINS.

No. 534,155. Patented Feb. 12, 1895.

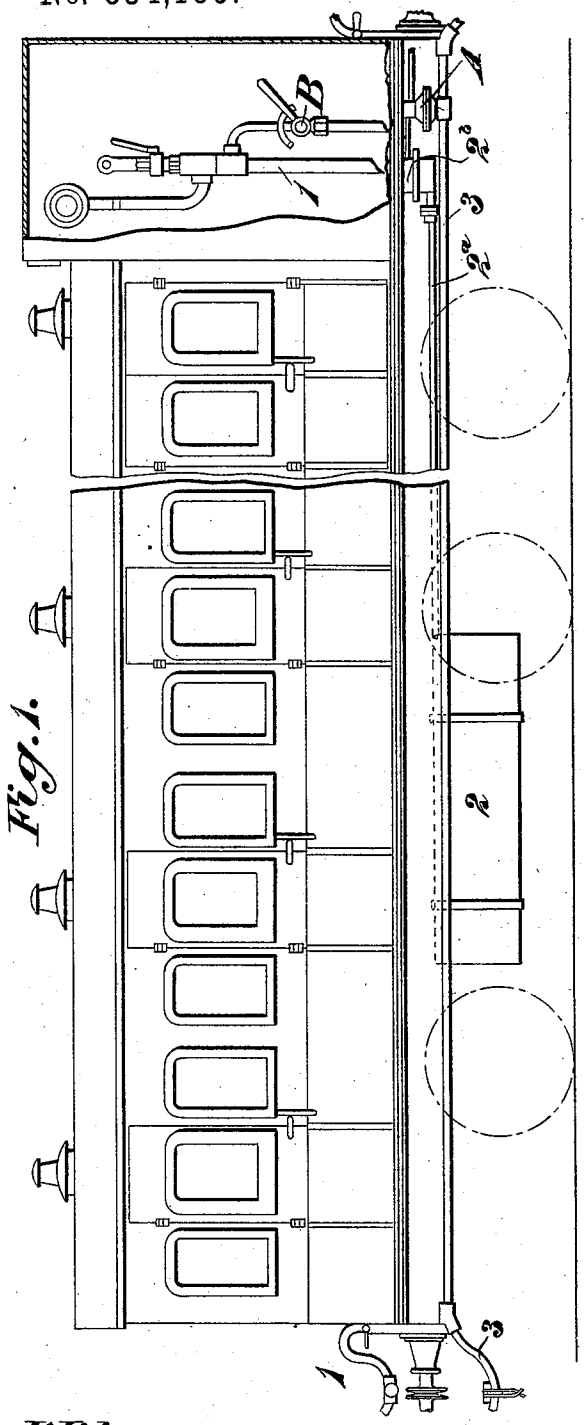

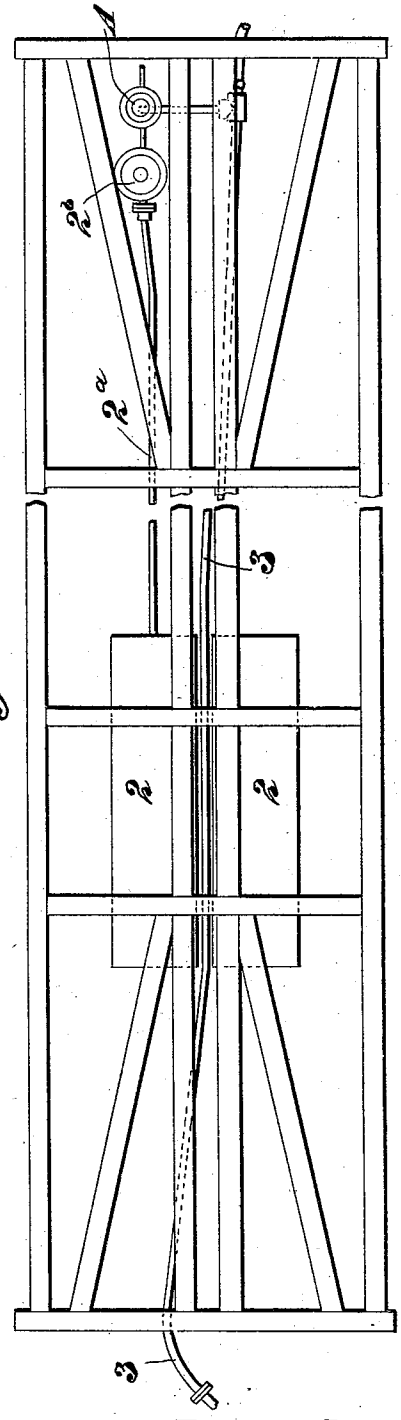

Witnesses.
M. F. Boyle
Charles R. Searle.

Inventor.
Edwin Francis Howlden
By Thomas Drew Stetson
Attorney

THE NORRIS PETERS CO., PHOTO-LITHO., WASHINGTON, D. C.

(No Model.)

4 Sheets—Sheet 2.

E. F. HOWLDEN.

APPARATUS FOR CONTROLLING GAS SUPPLY ON RAILWAY TRAINS.

No. 534,155. Patented Feb. 12, 1895.

Fig. 3.

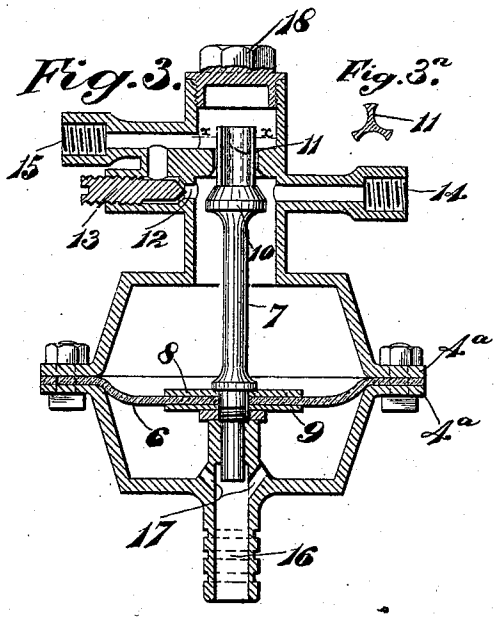

Fig. 3a.

Fig. 4.

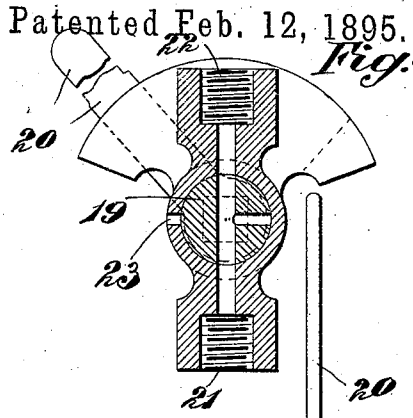

Fig. 5.

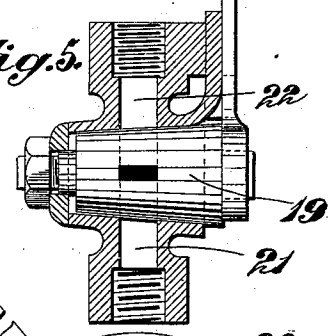

Fig. 7.

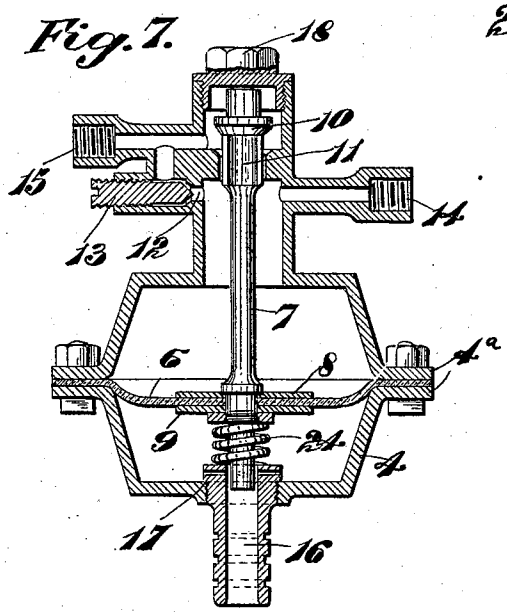

Fig. 8

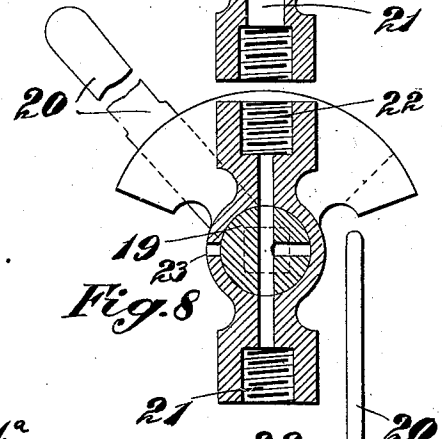

Fig. 9

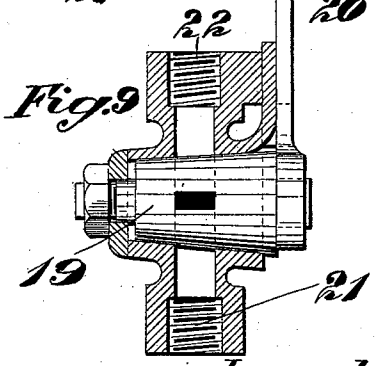

Witnesses.

M. F. Boyle

Charles R. Searle.

Inventor.

Edwin Francis Howlden

By Thomas Spencer Stetson

Attorney

THE NORRIS PETERS CO., PHOTO-LITHO., WASHINGTON, D. C.

(No Model.) 4 Sheets—Sheet 3

E. F. HOWLDEN.

APPARATUS FOR CONTROLLING GAS SUPPLY ON RAILWAY TRAINS.

No. 534,155. Patented Feb. 12, 1895.

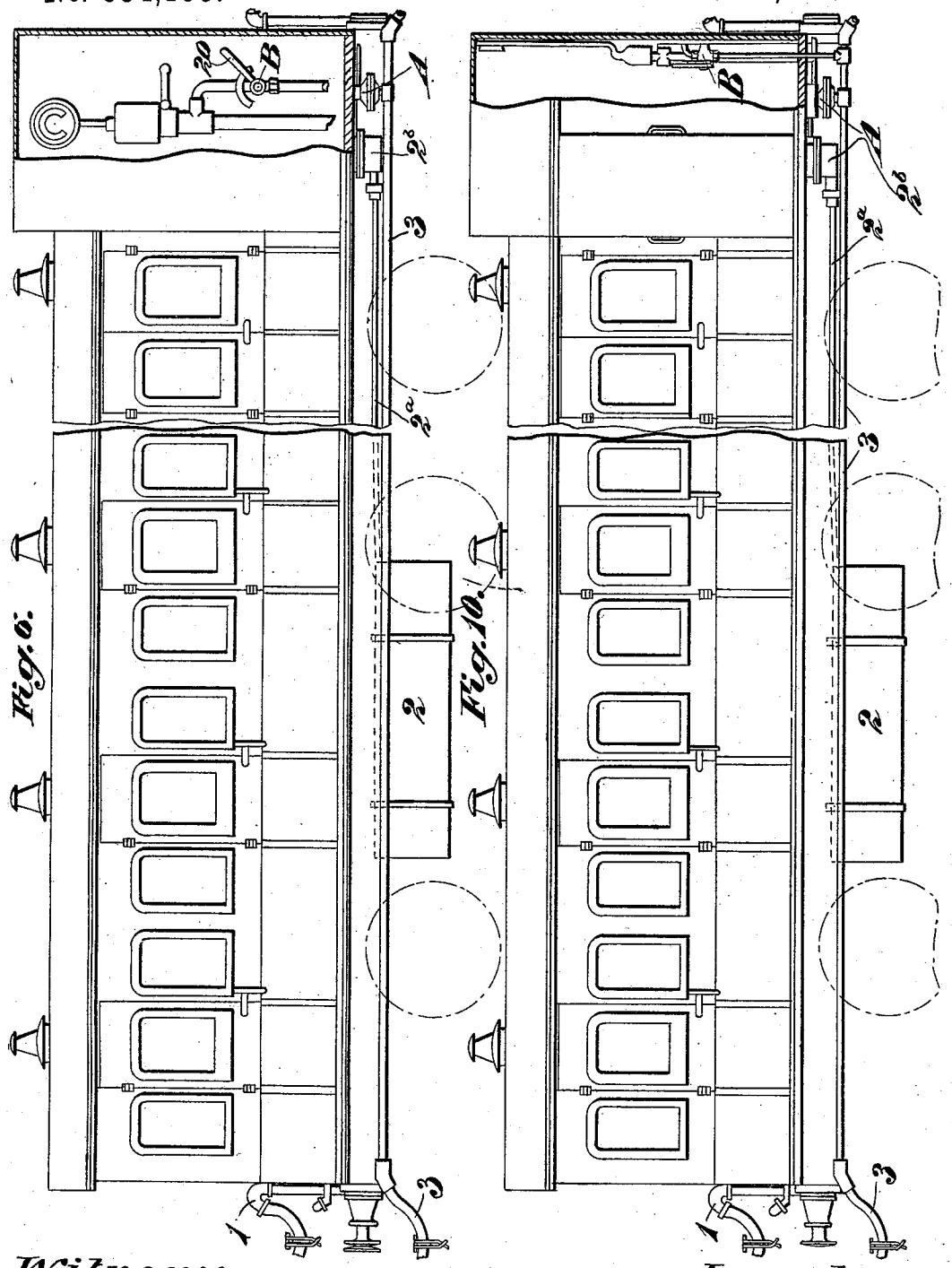

Witnesses.
M. F. Boyle
Charles R. Searle.

Inventor:
Edwin Francis Howlden
By Thomas Spencer Stetson
Attorney

THE NORRIS PETERS CO., PHOTO-LITHO., WASHINGTON, D. C.

(No Model.) 4 Sheets—Sheet 4

E. F. HOWLDEN.

APPARATUS FOR CONTROLLING GAS SUPPLY ON RAILWAY TRAINS.

No. 534,155. Patented Feb. 12, 1895.

Fig. 12.

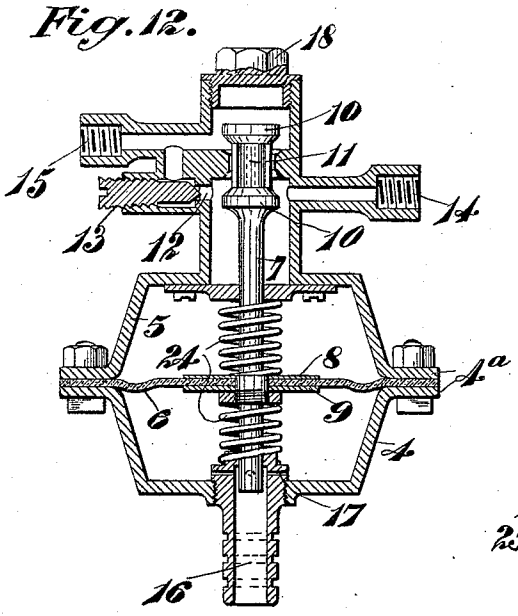

Fig. 13.

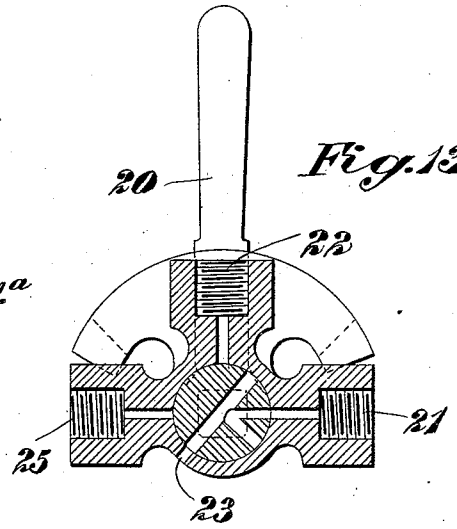

Fig. 11

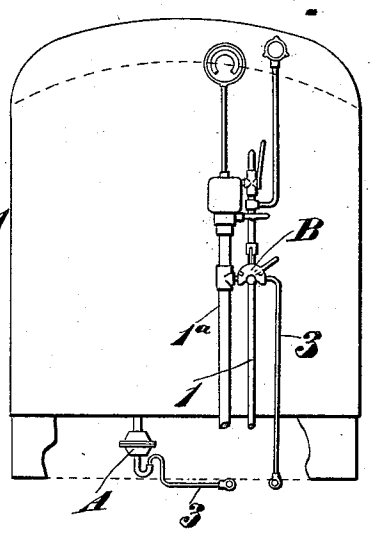

Witnesses.

M. F. Boyle

Charles R. Searle

Inventor.

Edwin Francis Howlden

By Thomas Drew Sheldon

Attorney

THE NORRIS PETERS CO., PHOTO-LITHO., WASHINGTON, D. C.

UNITED STATES PATENT OFFICE.

EDWIN FRANCIS HOWLDEN, OF DONCASTER, ENGLAND.

APPARATUS FOR CONTROLLING GAS-SUPPLY ON RAILWAY-TRAINS.

SPECIFICATION forming part of Letters Patent No. 534,155, dated February 12, 1895.

Application filed August 7, 1894. Serial No. 519,660. (No model.) Patented in England April 8, 1892, No. 6,783; in France September 5, 1892, No. 224,479; in Belgium September 6, 1892, No. 101,247; in Germany September 7, 1892, No. 70,072; in Italy September 30, 1892, LXVII,351; in Argentine Republic January 14, 1893, No. 1,246, and in Austria-Hungary March 18, 1893, No. 45,536.

To all whom it may concern:

Be it known that I, EDWIN FRANCIS HOWLDEN, a subject of the Queen of Great Britain, residing in Doncaster, county of York, England, have invented certain new and useful Improvements in Apparatus for Controlling the Gas-Supply from Reservoirs to Burners on Railway-Trains, (for which I have obtained a patent in Great Britain, bearing date of April 8, 1892, No. 6,783; in France, dated September 5, 1892, No. 224,479; in Belgium, dated September 6, 1892, No. 101,247; in Germany, dated September 7, 1892, No. 70,072; in Austria-Hungary, dated March 18, 1893, No. 45,536; in Argentine Republic, dated January 14, 1893, No. 1,246, and in Italy, dated September 30, 1892, Reg. Att., Vol. 67, No. 351,) of which the following is a specification.

Where gas is employed for lighting railway carriages it is stored in receptacles or reservoirs, from which by suitable pipes it is conveyed to the burners. In some cases during the daytime the lighting of the carriages is necessary only during certain comparatively short periods,—as, for instance, when a train is passing through a tunnel,—but ordinarily, as there are no convenient means available whereby the communication between the restervoir and the burners can be readily conrolled, the lighting of the carriages has to be continued during the whole, or a considerable part, of the journey, in order that they may be lighted when passing through tunnels. Likewise it frequently happens that a train is run with the gas full on for a long distance, notwithstanding that there is plenty of daylight for perhaps three-fourths of the journey, because it becomes dark during the latter portion for which it is necessary to have the full use of the gas-lights. Now my invention is designed to obviate this useless consumption of gas in such a manner as to utilize to this end the brake apparatus with which trains are frequently provided as hereinafter explained. For this purpose each gas reservoir is provided with a pipe arranged to convey gas from the reservoir to the several burners of the carriages, and with a valve or regulator (hereinafter called a regulator) and means for operating the same by fluid pressure, so that the supply of gas from the reservoir to the burners may, whenever desired, be nearly cut off, or regulated as required, by operating a suitable valve on the engine or some other part of the train whereby communication is established between the regulators and the train pipe of continuous or automatic brakes adapted to be worked with compressed air or vacuum (hereinafter called the brake train pipe) whereby I am enabled to dispense with the use of special air compressing apparatus for controlling the gas lights as heretofore proposed.

In carrying out my invention, the regulators, adapted to be operated by fluid pressure, are placed in suitable connection with a pipe to which fluid pressure can be admitted, or in which a partial vacuum can be created when it is desired to operate the regulators, by placing the said pipe in communication with the brake train pipe, whereupon there will obtain in the pipe connected with the regulators a like fluid pressure or partial vacuum to that obtaining for the time being in the train pipe, thus operating the regulators as required.

Referring to the accompanying illustrative drawings, Figure 1 is a side elevation showing an arrangement of apparatus according to my invention fitted on a train provided with an air-pressure brake. Fig. 2 is a plan showing the arrangement of the parts beneath the vehicle body. Figs. 3, 3ª, 4, and 5 are on a larger scale. Fig. 3 is a vertical central section to a larger scale, of one of the regulators used in this arrangement. Fig. 3ª is a cross section on the line *x x* Fig. 3. Figs. 4 and 5 are sectional elevations at right angles to each other showing a valve for controlling the operation of the aforesaid regulators. Figs. 6, 7, 8 and 9 are similar views to Figs. 1, 3, 4 and 5 showing an arrangement of apparatus according to my invention fitted on a train provided with a vacuum brake. Fig. 10 is a side elevation showing a general arrangement of apparatus for use on vehicles fitted for both air pressure and vacuum brakes. Fig. 11 is an end elevation showing the arrangement of the parts in the guard's van. Figs. 12 and 13 are on a larger scale. Fig. 12 is a vertical cen-

tral section of one of the regulators used in this arrangement. Fig. 13 is a sectional elevation of the valve for controlling the operation of the said regulators.

Referring to Figs. 1 to 5 inclusive:—1 is the brake train pipe. 2 are gas reservoirs, of which there may be one or more on each vehicle.

2^a is a pipe arranged to convey gas from the reservoir to the several burners of the carriage shown.

2^b is a reducing valve through which the gas passes in flowing from the reservoir to the burners.

A is a regulator with a diaphragm arranged in a chamber in such wise that the regulator can be operated by fluid pressure, as hereinafter explained, and B is a valve by which the admission of fluid pressure through a pipe 3 to the regulators is controlled.

The regulator A comprises an outer case formed in two flanged parts 4 and 5, between the flanges 4^a of which parts a flexible diaphragm 6 of suitable material such as india rubber is secured. A valve spindle 7 passes through the center of this diaphragm and is secured thereto by a pair of clamping rings or washers 8 and 9. The spindle 7 carries a valve 10 at its upper extremity, which controls the main passage 11 for the gas to the burners. The face of the valve 10 is situated below the said passage 11 so that upward movement of the valve closes the passage. A by-pass 12 controlled by an adjustable screw plug or valve 13 serves to allow sufficient gas to find its way to the lamps to prevent their complete extinction when the passage 11 is closed.

14 and 15 are respectively the inlet and outlet for the gas passing through the regulator, and 16 is a nozzle to receive a branch pipe leading to the pipe 3.

17, 17, are apertures by which the said nozzle communicates with the interior of the regulator.

18 is a screw cap or cover to permit inspection of the valve and valve seat, when necessary.

The valve B (see Figs. 4 and 5), which is provided with a taper plug 19 and an operating handle 20, is of the ordinary type and its construction will be obvious from the drawings. It is provided with three apertures (21, 22 and 23) in its shell. Of these 21 leads to the pipe 3; 22 leads to the brake train pipe; and 23 communicates with the atmosphere. As indicated in Fig. 4, the plug 19 is provided with passages which correspond to the above mentioned apertures 21, 22 and 23, so that according to desire, the pipe 3 can either be put into communication with the brake train pipe, or be opened to the atmosphere.

The operation of the apparatus is as follows:—The passage 11 of each regulator A is normally open, the valve 10 resting (by reason of its own weight and that of the parts connected with it) in its lowest position as shown in Fig. 3. The gas thus finds free passage from the inlet 14 to the outlet 15, and the gas is full on at the burners. At this time the operating handle 20 of the valve B (see Fig. 1) is turned into such a position that the pipe 3 and the space below the diaphragm 6 are in communication with the atmosphere. When it is desired to nearly cut off the gas from the burners, the handle 20 of the cock B is turned into the position indicated in Fig. 4 so that the pipe 3 is in communication with the brake pipe 1. This causes an increase of pressure in the regulators A and causes the diaphragms 6 to rise, so closing the valves 10. By again opening the pipe 3 (which extends throughout the train) to the atmosphere, the diaphragms 6 and valves 10 of the several regulators are allowed to descend, thereby again opening the passage 11 and allowing the full supply of gas to pass to the burners. A spring or weight may if desired be provided to assist the downward movement of each of the diaphragms and valves.

In the arrangement shown in Figs. 6 to 9 inclusive, in which the same reference letters and figures are used as in Figs. 1 to 5 inclusive, to designate corresponding parts, the valve 10 has its face above the passage 11 which is closed by a downward movement of the valve. A spring 24 tends to raise the valve and diaphragm 6.

The operation of the apparatus is similar to that of the apparatus just described in connection with an air pressure brake. As long as the pipe 3 is open to the atmosphere, the valve 10 of each regulator A is in its highest position, and the gas can pass freely to the burners. When, however, the pipe 3 is put into communication with the brake train pipe 1, by turning the handle 20 of the cock B into the position shown in Fig. 8, a partial vacuum is produced beneath each diaphragm 6 which thereupon descends with the corresponding valve 10. This closes the passages 11 and thereby cuts off the main supply of gas from the burners, leaving only the small quantity which flows through the by-pass 12 of each regulator.

In the arrangement shown in Figs. 10 to 13 inclusive, there are two brake train pipes viz., 1, 1^a of which the larger one viz., 1^a, is the vacuum brake pipe, and the other viz., 1 is the air pressure brake pipe. The valve 10 of the regulator in this case is provided with two faces, an upper and a lower one, so as to close the passage 11 whether moved upward or downward. The said valve is normally retained in the open position as indicated in Fig. 11 by two springs 24 24 arranged one above and the other below the diaphragm 6. The valve B is provided in this case with four openings, viz., 21, 22, 23 and 25 in its shell. Of these 21 leads to the pipe 3; 22 leads to the air-pressure brake pipe 1; 23 leads to the atmosphere, and 25 leads to the vacuum brake pipe 1^a. Passages corresponding with these apertures are formed in the plug 19 of

the cock or valve, so that the pipe 3 can be put to pressure, vacuum, or atmosphere as described.

It will be seen that either an increase or a decrease of pressure below the diaphragm 6 and the consequent upward or downward movement of the valve 10, will cut off the main supply of gas to the burners, so that with this apparatus the said supply can be regulated whichever brake system is in use.

The shutting off of the main gas supply to the burner might be effected by the weight of the regulator valve or by springs, the opening of the said supply being then effected by opening the communication between the regulator and the train pipe, but I do not recommend such an arrangement as it is open to objections that do not apply to those I have illustrated.

What I claim is—

1. Apparatus for controlling the gas supply to burners on a train fitted with an automatic brake, comprising the brake train pipe, the gas reservoirs with gas distributing pipes on the several carriages of the train, a second train pipe, gas regulators each connected with said second train pipe and having a valve adapted to control the flow of gas from one of said reservoirs a by-pass and a diaphragm for operating said valve when subjected to difference of pressure at its two sides, and means for placing said second train pipe in communication alternately with said brake train pipe and with the external atmosphere substantially as herein described.

2. In apparatus for controlling the gas supply to burners on a railway train, the combination with the gas reservoirs, gas distributing pipes, and brake train pipe, of a second train pipe, a cock for placing the same alternately in communication with the brake train pipe and with the external atmosphere, and gas regulators each comprising a casing 4—5 having a nozzle 16 connected with said second train pipe and a gas passage 11 in communication with a gas reservoir, a flexible diaphragm 6 located between said nozzle and gas passage, a gas valve 10 carried by said diaphragm and controlling said gas passage, a by-pass to said gas passage, substantially as herein described.

In testimony whereof I have signed my name to this specification in the presence of two subscribing witnesses.

EDWIN FRANCIS HOWLDEN.

Witnesses:

ARTHUR BOWMAN BROWN,

WILLIAM POWELL,

Both of 23 Priory Place, Doncaster, Clerks to Messrs. Parkin & Co., Solicitors.