April 17, 1934. M. Y. W. LOWE ET AL 1,955,644

HINGE

Filed June 20, 1931

Fig. 1.

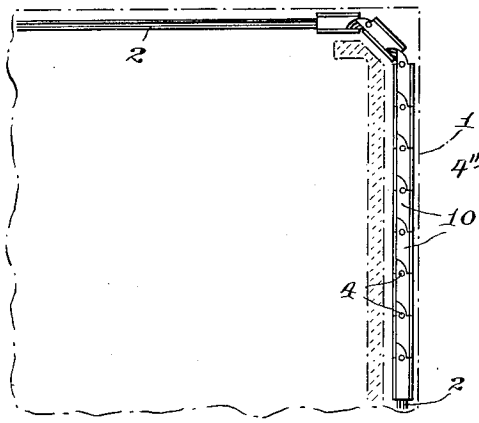

Fig. 4.

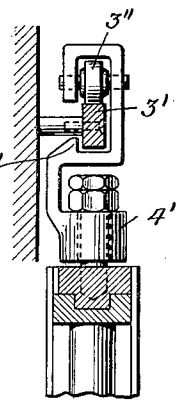

Fig. 3.

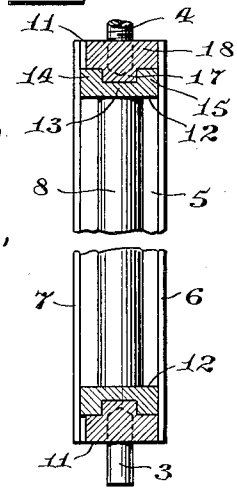

Fig. 2.

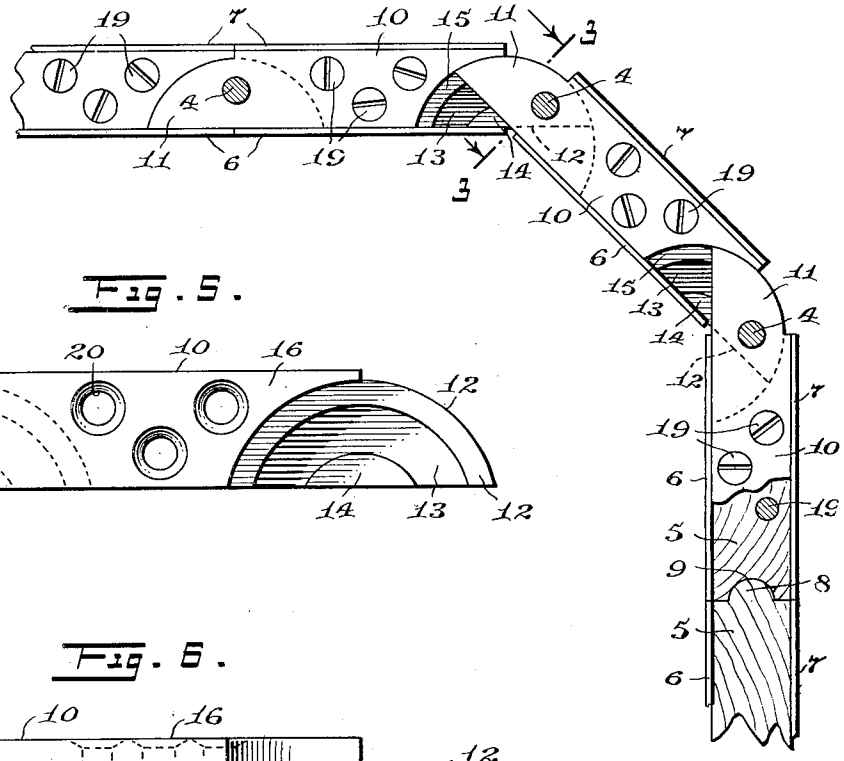

Fig. 5.

Fig. 6.

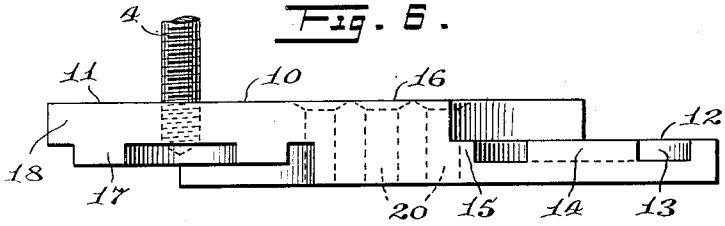

WITNESSES

Jos. L. Lamia

A. L. Kitchen.

INVENTORS

Martin Y. W. Lowe

George K. Gustavson

BY Munn & Co

ATTORNEYS

Patented Apr. 17, 1934 1,955,644

UNITED STATES PATENT OFFICE

1,955,644

HINGE

Martin Y. W. Lowe and George K. Gustavson,
New York, N. Y.

Application June 20, 1931, Serial No. 545,742

2 Claims. (Cl. 16—178)

This invention relates to hinges, and particularly to what may be termed a concealed hinge, the object being to provide a hinge structure wherein a single door member may be mounted or connected with a stationary support, or where a plurality of doors may be hingedly connected together.

Another object of the invention is to provide a hinge structure adapted for a door formed of a plurality of sections capable of being slid from one point to another and around a corner if desired.

An additional object, more specifically, is to provide a hinge adapted to be placed at the top and bottom of a door and coact with another door or stationary support for hingedly connecting the two members together, the structure being such that the hinge formation will be concealed when the door is closed.

In the accompanying drawing—

Figure 1 shows a dotted portion of an elevator car with a door embodying the invention applied.

Figure 2 is an enlarged top plan view of several of the sections of the door shown in Figure 1.

Figure 3 is a sectional view through Figure 2 approximately on line 3—3.

Figure 4 is a view similar to the upper part of Figure 3 but showing a hanger connected with the top pin for supporting the door.

Figure 5 is a top plan view of one of the hinge members shown in Figure 2.

Figure 6 is an edge view of the hinge members shown in Figure 5.

Referring to the accompanying drawing, 1 indicates conventionally an outline showing part of an elevator car and mounted on this car is a U-shaped guide 2 adapted to receive the various pins 3. If desired, a single guide could be arranged at the top though this would cause all the weight of the door to rest on the bottom guide 2 and in order to prevent this, usually the top pin 4 is connected with a hanger 4' which may be of a special structure or ordinary structure. As shown in Figure 4, the hanger 4' is substantially Z-shaped and is provided with an abutment 4'' coacting with the track 3' to hold the roller 3'' in position. By reason of this structure, the door moves freely and easily back and forth as desired. By reason of this structure and that shown in Figure 2, which will be hereinafter fully described, the door may be moved around a corner, thus making it possible to open practically the entire width of one side of a square-shaped enclosure such as an elevator. This structure also makes it possible to provide a smooth faced, rigid, solid appearing straight door presenting the utility and the characteristics of a single piece ordinary door when in a closed position. It will also be evident that the door as shown in Figures 1 and 2 may be mounted for use at any point and particularly on an elevator platform. If desired, it could be mounted on the platform as shown in Figures 1 and 2 or be recessed in the platform without departing from the spirit of the invention. In any event, it is desirable to have a substantially U-shaped guide or track 2 adapted to receive the various door pins 3. The metal bar or track 3' is suspended above the top of the door by suitable brackets or any desired way and shaped to conform to the shape of the bottom track 2. On the track or rail 3' the anti-friction rollers 3'' are free to turn and suitable pins fastened in the hanger 4' whereby the door may slide back and forth or be caused to move around the corner of the elevator car enclosure as indicated particularly in Figure 1 of the drawing.

It will be evident that while the hinge is adapted for use on elevator doors of the type specified, it may be used on many other kind of doors or for other purposes without departing from the spirit of the invention. As indicated in Figure 2 of the drawing, there are a number of sections 5, said sections being shown of the same size and constructed with a wooden center and side or covering plates 6 and 7. In each section 5 there is provided a bead 8 from one edge and a groove 9 along the opposite edge, said bead and groove meshing when the door sections are closed. Mounted at the top and bottom of each of the sections 5 is a hinge member 10. These hinge members extend beyond the edges of the various sections 5 at both ends. An extension 11 carrying a pin, as for instance pin 4, while the extension 12 extends the same distance beyond the door section 5 as extension 11, and is provided with a groove 13 and raised portions 14 and 15 offset from the top surface 16. Extension 11 is made to mate with extension 12 and consequently is made with a semi-circular bead 17 which is adapted to slidably fit into the groove 13 of the next hinge. The entire extension 12 is offset from the top surface 16 the same distance as the thickness 18 so that the top surface of extension 11 will be flush with the surface 16.

From Figure 3 is will be noted that the side metal coverings or panels 6 and 7 extend above and below the wood 5 a sufficient distance to be flush with the respective surfaces 16 of the top and bottom hinge members. In this way the

hinge members are completely hid except when partly open. In case the door or section is made of metal, a suitable depression could usually be provided for the hinge members 10 or, if desired, they could be merely connected at the top of the door. The same is true of wooden doors. In order that the hinge may be properly connected in place, screws 19 extend through suitable openings 20 in the hinge member 10. The screws could be screws for wood when a wood center is being used or a complete wooden door, but preferably machine screws when a hinge member is applied to an all metal door. When the sections are made entirely of metal, they really form substantially rectangular tubes shaped to agree with the shape of the section shown in Figure 2 which includes the bead on one edge and the groove on the opposite edge. When made of metal, suitable threaded apertures are provided for receiving the screws for fastening the hinge members. The hinge members, whether used on wood or wood and metal or all metal, will be of the same structure and when the grooves 13 and beads 17 are formed, they are so located that the points from which these beads and grooves are struck are outside of the body of the hinge so as to allow the panels and sections of the doors connected with the hinge to part instantly and completely without causing any friction or wear, as illustrated in Figure 2.

We claim:

1. A hinge of the character described including a hinge member having a body and an extension at each end, said extensions having diagonally opposite faces offset from the adjacent faces of the body, an arc-shaped groove in the offset face of one extension, an arc-shaped bead projecting from the offset face of the other extension, the bottom of said groove and top of said bead being in the same plane and having parallel axes.

2. A hinge structure for doors provided with a plurality of substantially rectangular sections, with each section having a hinge-receiving recess, comprising a hinge member adapted to be fitted into each recess at each end of each section, means for rigidly securing the respective hinge members to the respective sections, said hinge members having a projection extending from each end and beyond the section to which it is secured, one of said projections in connection with the body of the hinge having an arc-shaped bead formed thereon and the other of said projections with the body of the hinge having an arc-shaped groove formed therein, the bead of one hinge member being adapted to slide in the groove of the next adjacent hinge member so that said sections are hingedly connected together with the respective extensions pocketed in adjacent recesses of adjacent door sections when the door is closed.

MARTIN Y. W. LOWE.
GEORGE K. GUSTAVSON.