N. W. HUMPHREY.

HYDRAULIC MACHINE.

APPLICATION FILED JAN. 21, 1921.

1,404,717. Patented Jan. 24, 1922.

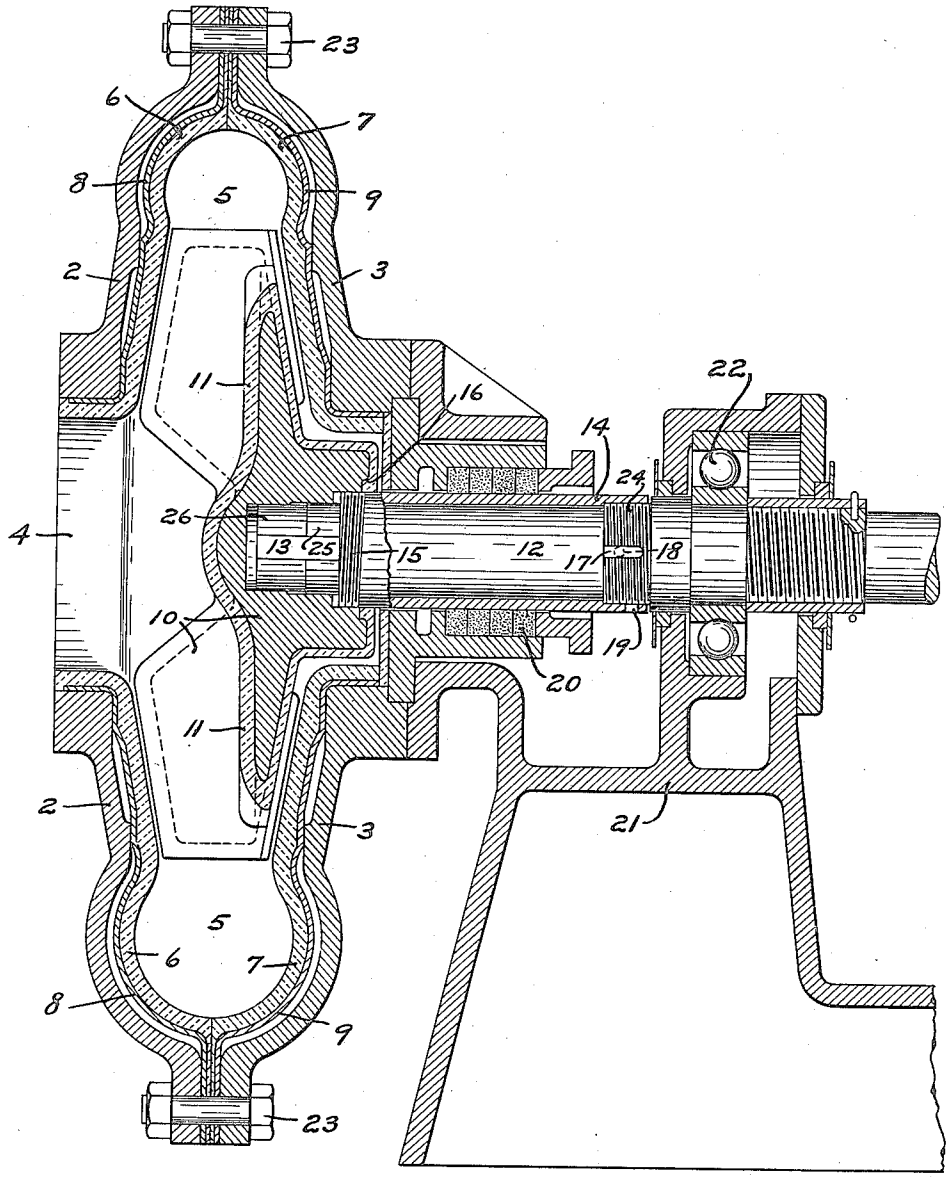

Inventor

N. W. Humphrey

by A. D. DeWein

Attorney

UNITED STATES PATENT OFFICE.

NOAH W. HUMPHREY, OF WEST ALLIS, WISCONSIN, ASSIGNOR TO ALLIS-CHALMERS MANUFACTURING COMPANY, OF MILWAUKEE, WISCONSIN, A CORPORATION OF DELAWARE.

HYDRAULIC MACHINE.

1,404,717. Specification of Letters Patent. Patented Jan. 24, 1922.

Application filed January 21, 1921. Serial No. 438,863.

To all whom it may concern:

Be it known that I, NOAH W. HUMPHREY, a citizen of the United States, residing at West Allis, in the county of Milwaukee and State of Wisconsin, have invented a certain new and useful Improvement in Hydraulic Machines, of which the following is a specification.

This invention relates in general to improvements in the art of constructing and operating hydraulic machinery and relates more specifically to improved means for connecting the rotor of a hydraulic turbine, pump or the like to the main shaft thereof.

An object of the invention is to provide simple and efficient means for attaching the rotor of a hydraulic machine to its supporting shaft. Another object of the invention is to provide means for attaching a rubber or similarly coated rotor to a shaft without necessitating puncturing or perforation of the coating. A further object of the invention is to provide means manipulable from the exterior of the casing of a hydraulic machine, for effecting adjustment of elements which are located within the casing. Still another object of the invention is to provide simple and efficient means for effecting removal of the rotor of a hydraulic machine. Another object of the invention is to provide rotor adjusting and removing means which are protected against the action of gritty substances or chemicals contained in the water which passes through the machine. A further object is to improve the type of rotor adjusting and removing means forming the subject of a copending application filed by Homer P. Binder on or about Jan. 21, 1921, Ser. No. 438,842. These and other objects and advantages of the present invention will be apparent from the following description.

A clear conception of an embodiment of the invention and of the operation of a device constructed in accordance therewith, may be had by referring to the accompanying drawing forming a part of this specification in which like reference characters designate the same or similar parts.

The single figure of the drawing is a central vertical section through a rubber protected centrifugal pump.

The centrifugal pump comprises in general a main outer casing formed of sections 2, 3, a rotor or impeller 10 located within the casing, an inlet or suction passage 4 leading into the casing in line with the center of the impeller, and an annular discharge chamber surrounding the impeller and communicating with a tangential discharge conduit not shown.

The main pump casing is supported from the end of a base or frame 21 which may also support the driving pulley or propelling motor, and has the interior of its sections 2, 3, protected by soft rubber liners 6, 7 respectively, which are secured, as by vulcanizing, to metal backing plates 8, 9 respectively. The casing sections 2, 3 are clamped together by means of an annular series of bolts 23 which also serve to hold the liners 6, 7 and the plates 8, 9 in position. The liner 6 serves to protect the inlet passage 3 as well as the casing section 2, while both of the liners 6, 7 co-operate to form a protecting coating for the annular discharge chamber 5. Removal of the casing section 2, effects free access to all portions of the interior of the pump casing, without necessitating disturbance of the pump supporting casing section 3.

The pump rotor or impeller 10 comprises a series of outwardly directed vanes extending from the suction passage 4 to the discharge chamber 5, and a hub formed integral with the vanes, and forming a support therefor. The entire impeller 10 including the vanes and the hub, is provided with a coating 11 of soft rubber or similar material which is adapted to protect the structure against the action of gritty substances or chemicals which may be contained in the water passing through the pump. The impeller hub is bored to snugly fit the reduced end portions 25, 26 of the main horizontal shaft, and is drivingly connected to the shaft by means of one or more keys 13 located in adjacent keyways in the hub and shaft. The shaft portions 25, 26 are of different diameters and snugly fit corresponding bores in the impeller hub. The main horizontal shaft 12 penetrates the pump casing section 3 through a stuffing box 20 located on the side of the pump opposite to the section passage 4, the shaft 12 being mounted in one or more bearings 22 mounted upon the frame 21.

In order to permit adjustment of the im-

peller 10 relatively to the casing sections 2, 3 after the pump has been assembled, means which are manipulable from the exterior of the casing, are provided. These means besides performing such impeller adjustment function, serve to effect removal of the impeller 10 from the main shaft 12 when the casing section 2 has been removed. The impeller adjusting and removing means comprises an annular sleeve 14 surrounding the main shaft 12 and extending through the stuffing box 20. The end of the sleeve 14 adjacent to the hub of the impeller 10, is provided with an external left hand screw thread 15 which coacts with an internal screw thread of the impeller hub. The portion 16 of the coating 11 of the impeller, snugly fits the peripheral surface of the sleeve 14, thereby preventing fluid from entering the screw thread 15. The end of the sleeve 14 remote from the impeller 10, is provided with an internal right hand screw thread which coacts with the external screw thread 24 on the adjacent portion of the shaft 12. This threaded portion of the shaft 12 is provided with a series of longitudinal recesses 17 within any one of which a set screw 18 passing transversely through the sleeve 14, is adapted to coact in order to lock the sleeve 14 to the shaft 12 in an adjusted position. The internally threaded end of the sleeve 14 is located in the space between the gland of the stuffing box 20 and the bearing 22, and is provided with one or more holes 19 for the insertion of a spanner wrench whereby rotation of the sleeve 14 relatively to the shaft 12 may be effected when the locking set screw 18 has been removed. The sleeve 14 besides serving as means for adjusting and for removing the impeller 10, is preferably formed of suitable wear resisting material in order to provide protection for the portion of the shaft 12 located within the sleeve.

During the normal operation of the pump, the impeller 10 is rotated within the main casing by means of the main shaft 12 rotating in the bearings 22, thereby causing the impeller vanes to deliver fluid into the discharge chamber 5, from which the fluid is discharged through the tangential discharge conduit. The fluid thus passing through the impeller 10 is delivered from the suction passage 4 directly against the end of the impeller hub which is formed to deflect the flow and to direct the water toward the impeller vanes. The soft rubber liners 6, 7 and the coating 11 serve to resist destructive action of gritty substances or chemicals contained in the fluid, upon the internal pump elements. The protective liners 6, 7 and the coating 11 may be replaced when worn, free access to the interior of the pump for purposes of inspection and removal of the coated elements, being effected by removal of the bolts 23 of the casing section 2.

The impeller 10 may be adjusted longitudinally of the shaft, or removed from this shaft after the casing section 2 has been removed, by rotating the sleeve 14 relatively to the main shaft 12 with the aid of a spanner wrench applied to the openings 19 of the sleeve 14. As the sleeve 14 is rotated relatively to the shaft 12 after the locking set screw 18, which normally engages the slot 17 has been withdrawn, the internal right hand screw thread 24 at the outer end of the sleeve 14 produces relative longitudinal movement of the sleeve 14 along the shaft 12 in one direction, while the external left hand screw thread 15 at the inner end of the shaft 14 produces relative longitudinal movement of the impeller 10 along the sleeve 14 and the shaft 12 in the same direction. Due to the fact that the screw threads 24, 15 are of the opposite hand, the longitudinal movement of the impeller 10 relatively to the shaft 12 will be twice as great as the relative movement of the sleeve 14 longitudinally of the shaft, for a given amount of angular displacement of the sleeve 14. During such relative longitudinal displacement of the impeller 10 along the shaft 12, the impeller 10 is prevented from rotating relatively to the shaft by means of the keys 13. Mere adjustment of the impeller 10 for the purpose of producing the desired clearance within the pump casing, may be produced by a limited rotary movement of the sleeve 14 relatively to the shaft 12, the sleeve being again locked to the shaft 12 by means of the set screw 18, after the desired degree of adjustment has been attained. By continuing the rotary movement of the sleeve 14 in the proper direction, the impeller 10 may be completely removed from the end portions 25, 26 of the shaft 12, without necessitating longitudinal displacement of the shaft within its bearings 22. During such complete removal of the impeller 10, the sleeve 14 need not be withdrawn from the casing section 2, as the impeller will automatically disengage the screw thread 15 after the sleeve 14 has been rotated a definite amount. By forming the end of the shaft 12 with portions 25, 26 of different diameters, the impeller 10 is freely removable after it has been moved a distance substantially equal to the length of the shaft portion 25, as the bore of greatest diameters will then be adjacent to the shaft portion of smallest diameter.

The adjusting and removing device is readily manipulable from the exterior of the pump casing, and entirely avoids necessity of puncturing or perforating the coating 11 of the impeller 10, such perforation of the coating being undesirable as the wear resisting qualities of the coating are there-

by reduced. It will also be obvious that the use of right and left hand screw threads 24, 15 enables rapid adjustment and removal of the impeller 10, and that the impeller may be entirely removed without necessitating removal of the shaft 12 or of the sleeve 14. The sleeve 14 moreover provides efficient protection for that portion of the shaft 12 which is located therewithin, while the screw thread 15 is effectively protected against corrosion by means of the packing afforded by the coating portion 16.

It will be obvious that the improved device forming a subject of this invention, may be applied to other hydraulic machines such as turbines, as readily as to the pump herein shown. It should be understood that it is not desired to limit the invention to the exact details of construction and to the precise manner of manipulating the device herein shown and described, for obvious modifications within the scope of the appended claims may occur to persons skilled in the art.

It is claimed and desired to secure by Letters Patent:

1. In combination, a casing, a shaft extending into said casing, a rotor secured to said shaft within said casing, means for preventing displacement of said rotor around said shaft, and means operable from the exterior of said casing for effecting movement of said rotor along said shaft, said movement effecting means having screw thread coaction with said rotor and with said shaft.

2. In combination, a casing, a shaft having an end extending into said casing, a rotor secured to said shaft end within said casing, means for preventing relative rotation of said rotor and said shaft, and a sleeve having screw thread coaction with said rotor and said shaft for effecting relative longitudinal movement of said rotor and said shaft.

3. In combination, a casing, a shaft having an end extending into said casing, a rotor provided with a coating adjacent to said shaft end, said rotor being locked against rotation relatively to said shaft end, and a sleeve having screw thread coaction with the side of said rotor remote from said coating for moving said rotor longitudinally of said shaft.

4. In combination, a casing, a shaft having an end extending into said casing, a rotor having a hub fitting said shaft end and locked against rotation relatively to said shaft, a rubber lining for said rotor in alinement with said shaft end, and means manipulatable from the side of said rotor remote from said coating for moving said rotor longitudinally of said shaft, said means having screw thread coaction with said rotor.

5. In combination, a casing, a shaft extending into said casing, a rotor having a hub secured to said shaft, and means having screw thread coaction with said rotor and with said shaft for moving said rotor along said shaft.

6. In combination, a casing, a shaft extending into said casing, a rotor secured to said shaft within said casing, and an element having screw thread coaction with said rotor and with said shaft and rotable relatively to said shaft to move said rotor along said shaft.

7. In combination, a casing, a shaft having an end extending into one side of said casing, said casing having an opening in the opposite side thereof, a rotor secured to said shaft end and having a protecting coating in alinement with said casing opening, and means associated with said rotor on the side thereof remote from said casing opening for adjusting said rotor longitudinally of said shaft, said rotor having screw thread coaction with said means.

8. In combination, a casing, a shaft extending into said casing, a rotor locked against rotation relatively to said shaft, means movable longitudinally of said shaft for moving said rotor along said shaft, and means for effecting a greater degree of movement of said rotor than of said movable means along said shaft during manipulation of said movable means.

9. In combination, a casing, a shaft having an end located within said casing, a rotor keyed to said shaft end within said casing, said rotor having an internally threaded portion, a sleeve surrounding said shaft and having an externally threaded portion engageable with said internally threaded portion of said rotor, and means located outside of said casing for locking said sleeve to said shaft.

10. In combination, a casing, a shaft having an end located within said casing, a rotor keyed to said shaft end within said casing, said rotor having an internally threaded portion, a sleeve surrounding said shaft and having an externally threaded portion engageable with said internally threaded portion of said rotor, and means for locking said sleeve to said shaft.

11. In combination, a shaft, a rotor locked against rotation relatively to said shaft, and means having screw thread coaction with said rotor and with said shaft for moving said rotor along said shaft.

12. In combination, a shaft having an end provided with portions of different diameters, a rotor fitting said shaft portions, and means for moving said rotor along said shaft a distance equal to the length of one of said portions whereupon free removal of said rotor is permitted.

13. In combination, a shaft having a portion of different diameters, a rotor fitting

said shaft portions, and means having screw thread coaction with said rotor and said shaft for moving said rotor along said shaft portions.

14. In combination, a shaft having a portion of different diameters, a rotor fitting said shaft portions, means for locking said rotor against rotation relatively to said shaft portions, and means having screw thread coaction with said rotor and said shaft for moving said rotor along said shaft portions.

15. In combination, a shaft having a portion of different diameters, a rotor fitting said shaft portions and locked against rotation relatively thereto, means having screw thread coaction with said rotor and said shaft for moving said rotor along said shaft portions, and means for locking said rotor moving means to said shaft.

16. In combination, a shaft, a rotor associated with said shaft, means for locking said rotor against rotation relatively to said shaft, and means having screw threads of opposite hand coacting with said rotor and with said shaft respectively.

17. In combination, a shaft, a rotor locked against rotation relatively to said shaft, and a sleeve having screw threads of one hand coacting with said rotor and having screw threads of the opposite hand coacting with said shaft.

In testimony whereof, the signature of the inventor is affixed hereto.

NOAH W. HUMPHREY.