June 19, 1956 V. R. DESPARD 2,751,568

WIRE CENTERING MEANS FOR PIN-TYPE INSULATION PIERCING CONNECTORS

Filed Nov. 15, 1954

FIG. 1.

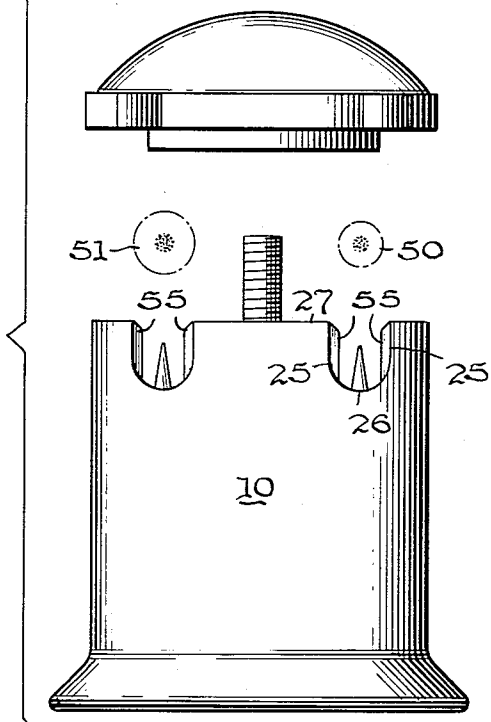

FIG. 2.

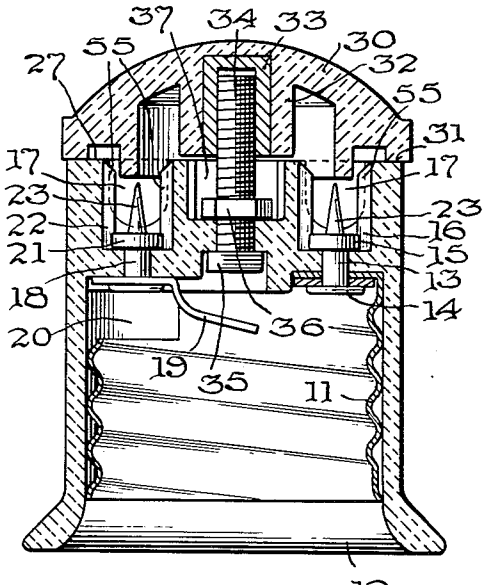

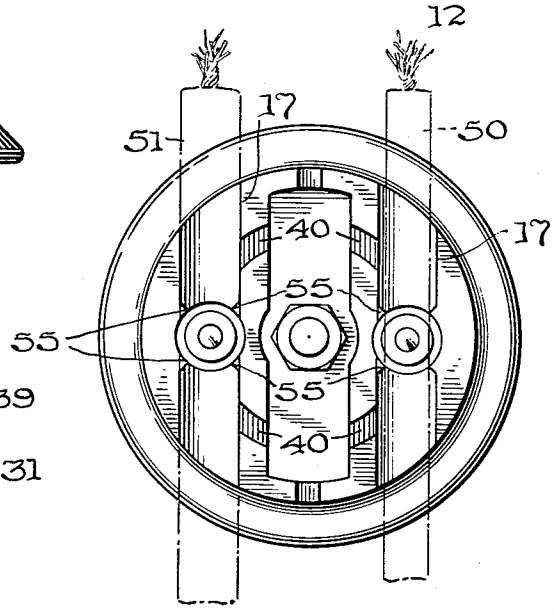

FIG. 3.

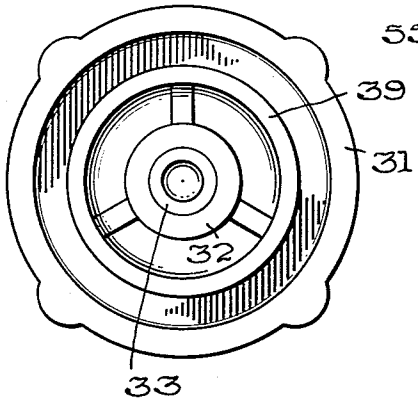

FIG. 4.

INVENTOR.
VICTOR R. DESPARD
BY
Leech & Radue
ATTORNEYS

United States Patent Office 2,751,568
Patented June 19, 1956

2,751,568

WIRE CENTERING MEANS FOR PIN-TYPE INSULATION-PIERCING CONNECTORS

Victor R. Despard, Syracuse, N. Y., assignor to Pass & Seymour, Inc., Syracuse, N. Y., a corporation of New York

Application November 15, 1954, Serial No. 468,783

2 Claims. (Cl. 339—99)

This invention relates to electrical connectors and more particularly to wire centering means for pin-type, insulation piercing connectors whereby insulated wires of different overall diameter may be effectively centrally pierced to insure adequate contact between the conductor and the contact pin.

It is a general object of the present invention to provide wire centering means for pin-type insulation piercing connectors to insure pin centering in the stranded conductor in spite of variations in insulation thickness or overall wire diameters.

An important object of the invention resides in the provision of means in the insulated wire receiving channel capable of centering therein such wire of an outside diameter less than channel width to insure penetration of the connector pin into the conductor thereof.

Another important object of the invention resides in the arrangement of the wire centering means whereby it may readily be embedded in the insulation of a wire of an overall diameter to closely fit the channel by the simple operation of pressing the wire into the channel and over the connector pin.

A further important object of the invention consists in arranging the centering means as fins or blades extending from both walls of the channel at opposite sides of the connector pin and parallel to the axis thereof whereby they are non-interfering with the operation of molding the channels into electrical apparatus.

Other and further objects of the invention will be more apparent to those skilled in the art upon a consideration of the accompanying drawing and following specification wherein is disclosed a single exemplary embodiment of the invention with the understanding that such modifications may be made therein as fall within the scope of the appended claims without departing from the spirit of the invention.

In said drawings:

Fig. 1 is a side elevation of a so-called pin-type connector lampholder or socket with the cap removed and conductors of two diameters positioned one to be entered into each channel where the connector pins are located;

Fig. 2 is a longitudinal central section through such a socket in fully assembled form;

Fig. 3 is a top plan view of the channelled end of the body portion of such a socket showing the conductor centering means in end elevation and engaging dotted line conductor insulation of two different diameters; and

Fig. 4 is a plan view of the under surface of the socket cap.

Electric light sockets and other wiring equipment using normal voltages and low currents are often equipped with what is known as pin-type, insulation piercing connectors, permitting quick assembly of the equipment to conductors. Such devices are particularly useful in assembling outdoor light strings for ornamentation, advertising or other purposes and for this the socket construction is provided with a pair of transverse, parallel slots each with a connector pin projecting from the bottom thereof. An insulated, stranded conductor can be pressed into each slot and held there by a subsequently applied cap. The pin in the bottom of each slot penetrates the conductor insulation and electrically engages the strands of the conductor so that electrical connection is made between the socket elements and the wires.

For a number of years, before the advent of satisfactory synthetic plastics having good weather resistant qualities and generally higher insulating properties than the earlier known materials, the external diameters of low voltage lighting conductors was usually controlled by the wire size and the so-called waterproof or weather resistant cover was of rubber under tarred braid. The overall diameter was substantially standardized for the most used wire gauges of 12 and 14. This made it simple to size the socket slots for a close fit with the walls of the conductor insulation to substantially insure the centering of the connector pin in the stranded conductors.

Lately, however, synthetic plastics of high insulating and weather resisting properties have become common as single coat insulators for stranded or solid wire, and because of their much higher dielectric strength the thickness of the insulation is considerably less than that of the so-called weather resistant two layer coatings. This results in a conductor with much smaller overall diameter. Since neither form of coating is universal a need arose for means to center the conductor over the pin connector when introducing it into the slot to insure centralization of the latter in the conductor, for otherwise it would be possible to introduce the smaller diameter wire without making adequate electrical contact. The more obvious solution, i. e., of making sockets with channels of different widths for different conductors, is not the economical one, and the present invention provides centering means capable of functioning with a relatively wide range of conductor diameters, so that only one standardized channel width is necessary.

Referring now to the drawings, there is illustrated a more or less conventional form of pin type lampholder or socket to which the present invention is applied. Such socket may include a molded cup-like plastic shell **10** to house the screw shell contact **11** exposed through the flared open end **12** of the device. The upper end of part **10** is closed by a thick integral molded portion, and the base of the screw shell is secured thereto by a rivet **13** passing through the base and a portion of the cup closure and headed over at **14** against the bottom of the screw-shell. The opposite end of the rivet has a head **15** seated in the bottom of a circular well **16** in the cup closure. Well **16** intersects at a right angle one of the wire receiving channels **17** extending in parallel relation transversely across the shell-cup closure end as seen in Fig. 3.

A similar pin **18** secures the center socket contact **19** against the bottom wall of the housing at a portion where the screw shell is cut away as at **20**. The head **21** of this pin is positioned engaging the bottom of well **22** in the other channel **17**. Formed integral with each of the pin heads **15** and **21** is a long tapered connector pin **22** projecting out of the well housing the heads **15** and **21** and a substantial distance into the wire channels **17**.

As viewed in end elevation in Fig. 1 the wire channels are each formed by spaced parallel side walls **25**, the distance between which is substantially that of the diameter of the largest insulated wire to be received therein. These walls are joined at the bottom by an arcuate trough **26** of semi-circular cross-section and the depth from the bottom of the arcuate portion of the trough to the top surface **27** of the base is greater than the width between the walls **25**.

A cap **30** is provided to cover over the channels and hold the wires firmly in position therein. It is formed of molded insulating material to a hollow, low, dome-like

configuration, having a flat annular border **31** facing and engaging the surface **27** and a thick center or hub portion **32** into which is molded a threaded metal sleeve **33** whereby the cap may be secured onto the threaded stem **34** extending axially through the base of the socket with the head **35** recessed in the bottom thereof beneath the center contact and the whole being secured in position by a nut **36** engaging the bottom of an elongated channel **37** between the wire channels, best seen in Fig. 3.

The under surface of the cap is shown in Fig. 4, and between the peripheral surface **31** and the center core **32** is an annular wall **39** projecting below the surface **31** and having such diameters that it is received in the wire troughs **17** just above the tips of the pins **23**. To accommodate it in other portions of the base appropriate circular grooves **40** are provided between channels **17** and **37**. The depth of the latter channel is adequate to accommodate **39** where it crosses the same at the two ends.

To wire such a device the cap is removed and a pair of conductors is arranged one above each channel and pressed into position therein to cause the pins to penetrate the insulation and enter between the conductor strands. The cap is then threaded on so that the wall **39** forces the wires over the pins and against the bottoms of their channels to make and maintain the conductor engagement.

The wire channels are made of a dimension to suit the larger type of insulation used on the wire to be received therein and their walls would naturally center such an insulated conductor over the pin. If, however, a thinner walled insulation is used, the overall diameter will be as shown in cross-section in the exploded Fig. 1 at **50** as compared with the larger dimension insulation shown at **51**. It is obvious if such small diameter wires were pressed into the channels they could pass between the sloping side of the pin and the side wall of the channel without the pin penetrating the insulation.

To prevent such an occurrence each flat channel wall is provided with two inwardly projecting, blade-like ribs or fins **55** which are located at the junctions of these walls and the wells in which the pins are sunk (see Fig. 3). These ribs are thin and knife-like and have their edges parallel to the axes of the pins, as clearly seen in Figs. 1, 2 and 3. The spacing between the edges of opposed ribs **55** is substantially equal to the diameter of the small insulation conductor **50**, whereby the conductors therein will be engaged thereby and centered over the pins the same as the larger ones, although they may be loose in the remainder of the channel. The fins or ribs are relatively thin in the direction of the length of the channels and their outer corners are rounded or chamfered, as shown, and are readily forced into the insulation of the larger diameter conductors to embed themselves therein and not seriously interfere with the introduction of these conductors into their channels and over the pins. As a matter of fact, when used with the large conductors these fins act somewhat in the sense of a strain relief device transmitting the load of the socket and its lamp to some extent to the insulation parts of the conductor and socket and thereby relieving the conductor parts of a large portion of the strain.

With the construction just described the socket or other electrical fitting (since the socket has been used in illustrative form only) is adapted for universal usage and can receive conductors of the usual wire gauges with either type of insulation covering now prevalent. Normally both conductors of a pair would be similar and not as shown in Figs. 1 and 3 for purposes of illustration.

I claim:

1. A pin type connector adapted to penetrate the insulation and engage the conductor of an insulated wire of circular configuration selected from among such wires having various overall diameters, comprising in combination, a block of insulation having a U-shaped channel therein for receiving an insulated wire usable with the connector, a tapering conductive pin extending transversely of said channel from the bottom of said U, fins of insulation arranged in pairs on opposite sides of the pin, the fins of a pair extending from opposite walls of the channel toward the other to center an insulated wire of less diameter than channel width over said pin to insure penetration of the conductor when the wire is pressed in the channel and to deform and enter the insulation of a wire of overall diameter greater than the spacing of the edges of a pair of fins, and said pairs of fins being spaced apart longitudinally of the channel not substantially more than the width thereof.

2. A pin type connector adapted to radially penetrate the insulation and engage the stranded conductors of a single insulated wire selected from among such wires of circular configuration having various overall diameters, comprising in combination, a block of insulation having a U-shaped channel therein dimensioned for receiving an insulated wire usable with the connector, a long tapering conductive pin mounted in said block and extending into said channel from the bottom of said U, four fins of insulation arranged in pairs on opposite sides of the pin, the fins of a pair extending from opposite walls of the channel toward each other to center an insulated wire of less diameter than channel width over said pin to insure penetration of the conductor when the wire is pressed into the channel and being of thin blade-like character to readily deform and enter the insulation of a wire of overall diameter greater than the spacing of the edges of a pair of fins which are substantially parallel to the axis of the pin, said pair of fins being spaced apart longitudinally of the channel not more than the width thereof, and means to force and hold a conductor over said pin.

References Cited in the file of this patent

UNITED STATES PATENTS

1,849,846	McNeil	Mar. 15, 1932
1,976,492	Greene	Apr. 16, 1935
1,997,716	Brooks et al.	Apr. 16, 1935
2,060,115	Pollock	Nov. 10, 1936
2,333,266	Miller	Nov. 2, 1943
2,353,882	Despard	July 18, 1944

FOREIGN PATENTS

615,737	Great Britain	Jan. 11, 1949