Feb. 2, 1937. N. DINION 2,069,357

COIL UNIT

Filed Feb. 7, 1936

Fig.1.

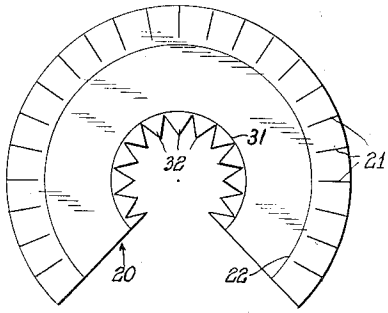

Fig.2.

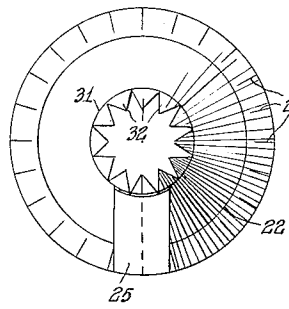

Fig.3.

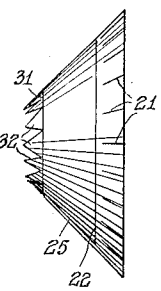

Fig.4.

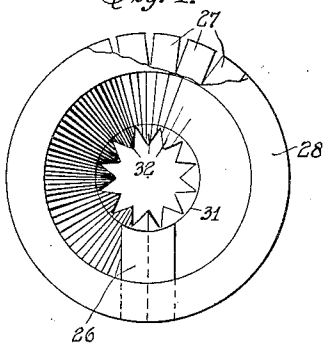

Fig.5.

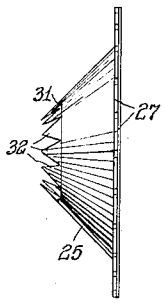

Fig.6

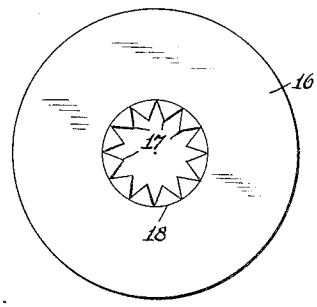

Fig.7.

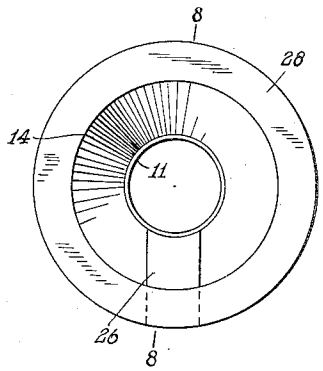

Fig.8.

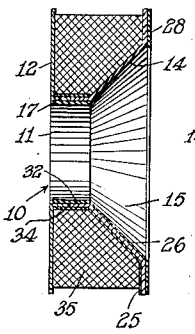

Fig.9.

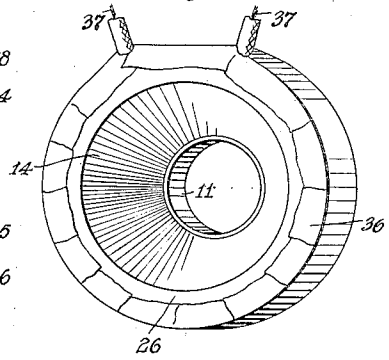

INVENTOR.

BY Nathan Dinion

Williams, Richardson

ATTORNEYS

Patented Feb. 2, 1937 2,069,357

UNITED STATES PATENT OFFICE

2,069,357

COIL UNIT

Nathan Dinion, Easton, Pa., assignor to Magnetic Windings Company, Easton, Pa., a corporation of Pennsylvania

Application Feb. 7, 1936, Serial No. 62,791

1 Claim. (Cl. 242—119)

This invention relates to coil units adapted for various uses in the electrical art, and is herein illustrated as embodied in a field coil unit especially designed for use in connection with sound reproducers of the type generally known as loudspeakers.

The coil unit herein illustrated is characterized, at least in part, by the fact that one of the ends of the spool or spool-like structure on which the coil windings are carried is so formed as to provide a concave depression coaxially disposed with relation to the spool and the core opening provided therein.

Coil units of the character briefly described above are recognized as possessing certain inherent advantages, from a mechanical standpoint, but the cost of such units, due to manufacturing difficulties heretofore encountered, has been such as to render them commercially prohibitive.

An important object of the present invention is to provide a coil unit, of the character above described, which is so improved and is structurally such that it may be manufactured at a cost sufficiently low to justify its commercial use in lieu of coil units of the type which it is intended to supersede.

Other objects and advantages of the invention will become apparent from the following description when taken in connection with the accompanying drawing, in which—

Fig. 1 is a face view of a blank adapted to form the concave end of a spool embodying the present invention; Fig. 2 is a view similar to that of Fig. 1 and illustrating the blank of Fig. 1 as having been distorted to form a frustro-cone-shape element, the contour of which is maintained by securing adjacent ends of the blank in an abutting relation; Fig. 3 is a view in elevation of the frustro-cone-shape element of Fig. 2 prior to distortion of its scored or slitted flange-forming margin into a plane perpendicular to its axis; Fig. 4 is a face view showing a retaining or reinforcing ring as having been applied to the distorted flange-forming margin of the frustro-cone-shape element for retaining such margin in flange-forming position; Fig. 5 is a view in elevation of the frustro-cone-shape element of Fig. 4; Fig. 6 is a face view of a blank adapted to form the flat end of a spool-like structure embodying the present invention; Fig. 7 is a view showing the concave end of a spool embodying the present invention; Fig. 8 is a transverse sectional view taken on line 8—8 of Fig. 7 and showing coil windings carried by the spool, and Fig. 9 is a perspective view showing a completed coil unit.

The completed coil unit illustrated in Fig. 9 includes, as shown most clearly in Fig. 8, a spool or spool-like structure 10 which is formed of a suitable insulating material, such as cardboard or the like, and is composed of three primary elements, namely, a tubular core member 11 and a pair of end members 12 and 14, the former of which is substantially flat and the latter of which is shaped to present a concave depression 15 coaxially disposed with relation to the spool and the core opening provided therein.

The end member 12 of the spool-like structure 10 is produced from a disc-like blank 16 (Fig. 6), characterized by the fact that it is provided with a plurality of prong-like wings 17 which are grouped about and normally project toward the center of the blank. The wings 17 terminate in points located on an imaginary circle described about the center of the blank and are adapted to be folded back into right-angle positions with relation to the blank so as to then permit the blank as a spool-end-forming element to be slipped onto the tubular core member 11. In order to facilitate folding back of the wings 17, the blank 16 is scored to define a circular line of fold 18 passing through the points of juncture between the several wings and the body portion of the blank, it being noted that the diameter of the opening, which is afforded when the wings assume right-angle positions with relation to the blank and which is substantially equal to the diameter of the tubular core member 11, is such as to promote a snug fit of the core member within the spool-end-forming element.

The end member 14 of the spool-like structure 10 is produced from an arcuate shaped blank 20 (Fig. 1), which is characterized by the fact that it is provided at its margin with a series of radial scorings 21 and an arcuate scoring 22, adjacent to the latter of which scorings the inner ends of the scorings 21 terminate. The blank 20 is adapted to be distorted to form the frustro-cone-shape end member 14, the contour of which is maintained by securing adjacent ends of the blank in an abutting relation by adhesively attaching a pair of strips 25 and 26, of suitable material such as paper, to opposite sides of the blank in an overlapping relation to the marginal areas adjacent the abutting edges. After applying the strips 25 and 26 to the end member 14, the marginal area of that member is folded back along the line of scoring 22 into flange-forming

position as shown in Fig. 5, such folding back or distortion of the marginal area being readily permitted due to the presence of the radial scorings 21, as will be appreciated when it is taken into account that the material of which the blank 20 is formed breaks down or separates along the scorings 21, thus allowing the perimeter of the end member 14 to expand as its margin is folded back along the line of scoring 22 and is separated into a plurality of radially extending tabs 27. In order that the deformed marginal area of the end member 14 may be retained in a plane perpendicular to the axis of that element, a retaining or reinforcing ring 28, of suitable material such as paper, is adhesively attached to the outer face of the margin.

Inasmuch as the blank 20 is scored to define, on the end member 14, a circular line of fold 31 (corresponding to the line of fold 18 hereinbefore described) and is so formed as to afford a series of spur-like wings 32 (corresponding to the spur-like wings 17 hereinbefore described), it becomes obvious that the end member 14 is adapted to be placed on the tubular core member 11 in the manner described in connection with the end member 12.

When the end members 12 and 14 are assembled in the spool-like structure 10, the spur-like wings 17 are complementary to and fit within the spaces afforded between the wings 32, and likewise the wings 32 are complementary to and fit within the spaces afforded intermediate the wings 17. The end members 12 and 14 may be adhesively held in a fixed relation on the tubular core member 11 and may be further held with respect to each other by adhesively attaching a strip 34, of suitable material such as paper, to the outer surfaces of the inter-engaging spur-like wings 17 and 32.

Pursuant to assembling the spool-like structure 10, the wire necessary to form the coil windings 35 may be wound about the hub portion of that structure intermediate its end members 12 and 14, whereupon the unit may be complemented by applying a suitable peripheral and marginal covering 36, through which may extend coil leads 37, to which the respective ends of the coil windings 35 are attached before the covering is applied.

Although the herein described structure is at present regarded as the preferred form of the invention and the herein described procedure as the preferred method of producing that structure, it will be understood that various changes, both as to structure and as to procedure, may be adopted without departing from the spirit of the invention or the scope of the following claim.

What is claimed is:

In a coil unit: a spool structure including a core member; and an end member attached to said core member and comprising an arcuate element presenting a frustro-cone-shape and having its opposite ends anchored with relation to each other; a flange carried at the perimeter of said element and disposed in a plane perpendicular to its axis, said flange including a plurality of tabs formed integral with said element; and a reinforcing element adhesively attached to said tabs for retaining them in said plane.

NATHAN DINION.