US 20090252579A1

(19) **United States**

(12) **Patent Application Publication**

DUPPER et al.

(10) **Pub. No.: US 2009/0252579 A1**

(43) **Pub. Date: Oct. 8, 2009**

(54) **METHOD AND APPARATUS FOR TRANSPORTING GROUPS OF FILLED BEVERAGE BOTTLES TO A BEVERAGE BOTTLE PACKAGING MACHINE IN A BEVERAGE BOTTLING PLANT, AND A METHOD AND APPARATUS FOR TRANSPORTING GROUPS OF CONTAINERS TO A CONTAINER HANDLING MACHINE IN A CONTAINER PROCESSING PLANT**

(76) Inventors: **Josef DUPPER**, Bedburg-Hau (DE); **Thomas LELIE**, Kleve (DE); **Ludger PAULS**, Ven-Zelderheide (NL)

Correspondence Address:
NILS H. LJUNGMAN & ASSOCIATES
P. O. BOX 130
GREENSBURG, PA 15601-0130 (US)

(21) Appl. No.: **12/410,999**

(22) Filed: **Mar. 25, 2009**

Related U.S. Application Data

(63) Continuation-in-part of application No. PCT/EP2007/007811, filed on Sep. 7, 2007.

(30) **Foreign Application Priority Data**

Sep. 26, 2006 (DE) 10 2006 045 453.7

Publication Classification

(51) **Int. Cl.**
B65B 21/00 (2006.01)

(52) **U.S. Cl.** **414/222.01**; 414/806

(57) **ABSTRACT**

A method and apparatus for transporting groups of filled beverage bottles to a beverage bottle packaging machine in a beverage bottling plant, and a method and apparatus for transporting groups of containers to a container handling machine in a container processing plant. The abstract of the disclosure is submitted herewith as required by 37 C.F.R. §1.72(b). As stated in 37 C.F.R. §1.72(b): A brief abstract of the technical disclosure in the specification must commence on a separate sheet, preferably following the claims, under the heading "Abstract of the Disclosure." The purpose of the abstract is to enable the Patent and Trademark Office and the public generally to determine quickly from a cursory inspection the nature and gist of the technical disclosure. The abstract shall not be used for interpreting the scope of the claims. Therefore, any statements made relating to the abstract are not intended to limit the claims in any manner and should not be interpreted as limiting the claims in any manner.

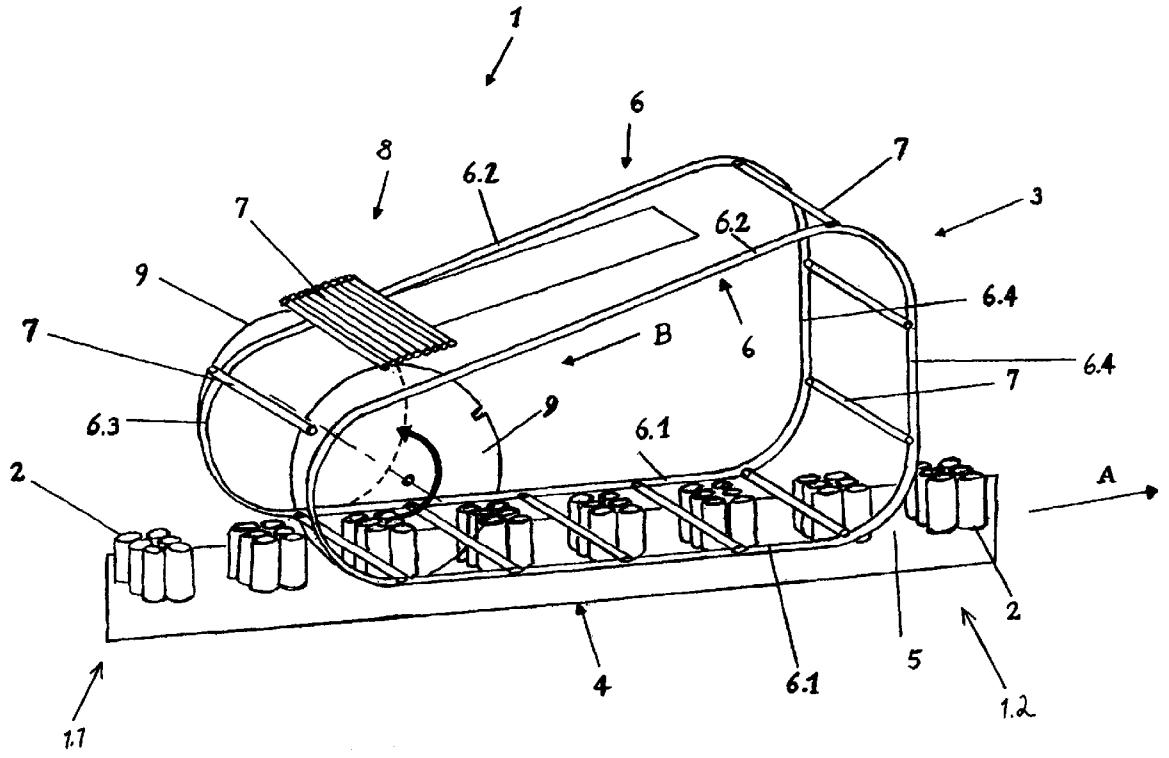

FIG. 1

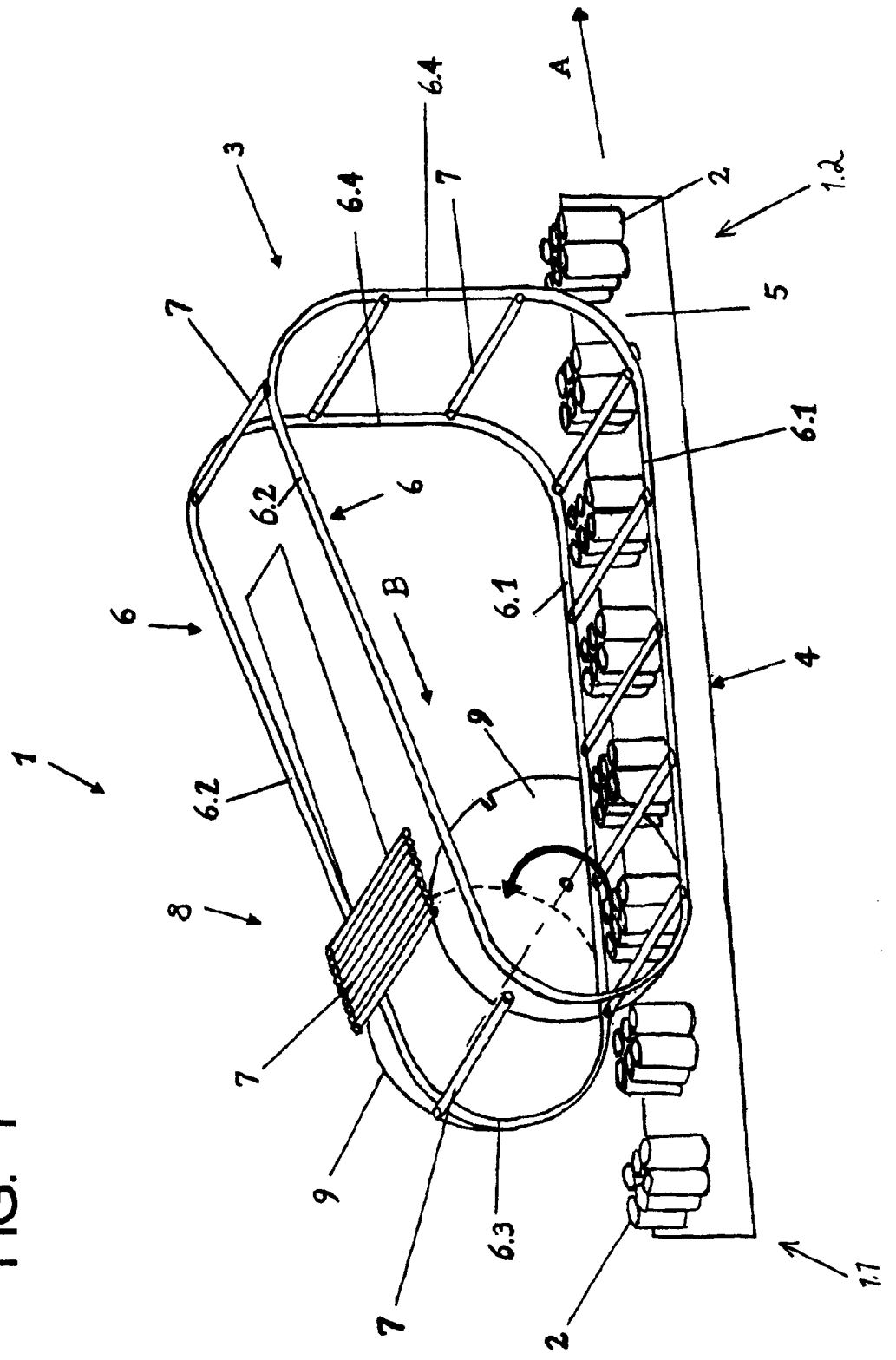

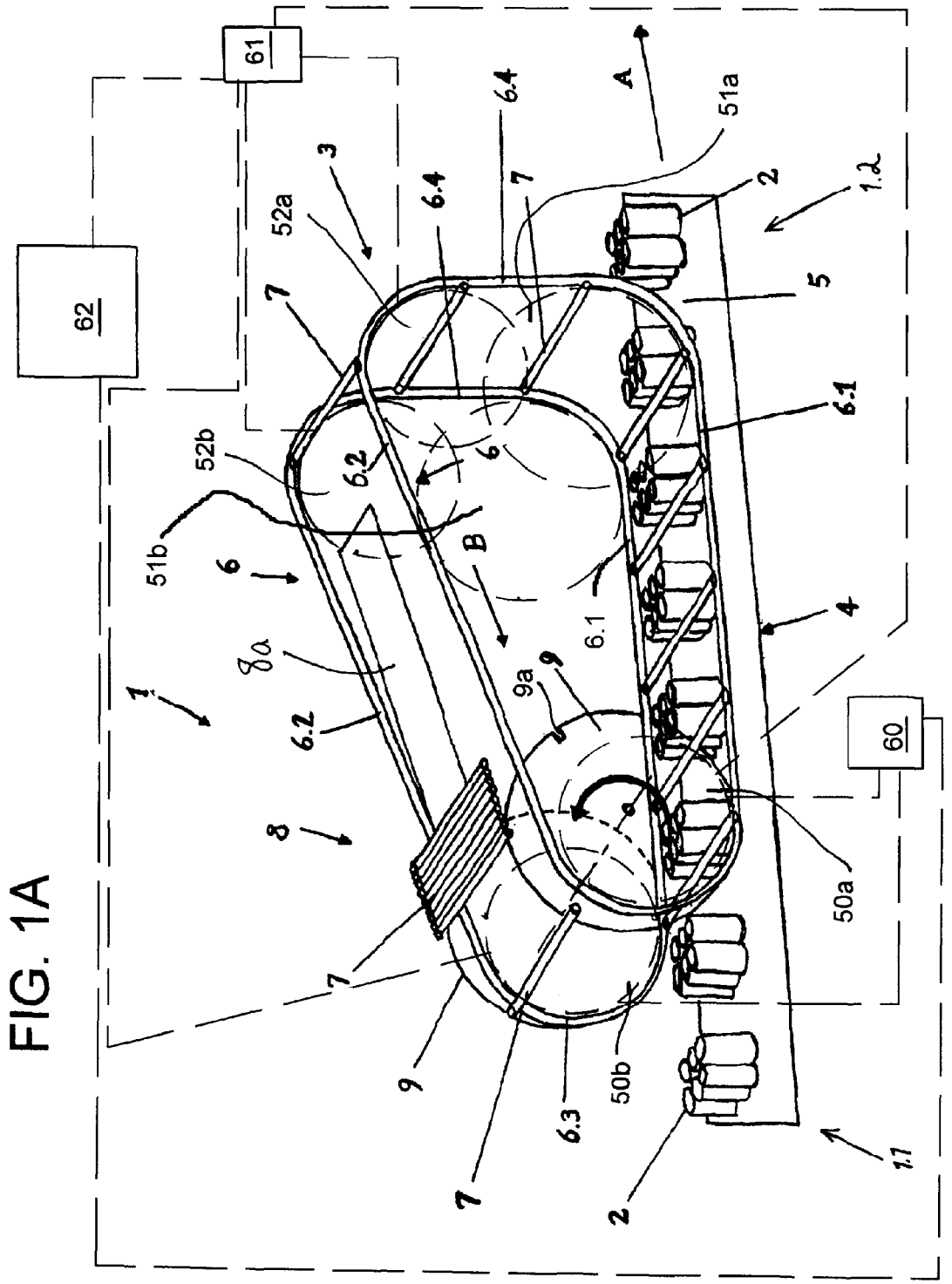
61
62
60
A
B
1
1.1
1.2
2
3
4
5
6
6.1
6.2
6.3
6.4
7
8
8a
9
9a
50a
50b
51a
51b
52a
52b

FIG. 1A

FIG. 2

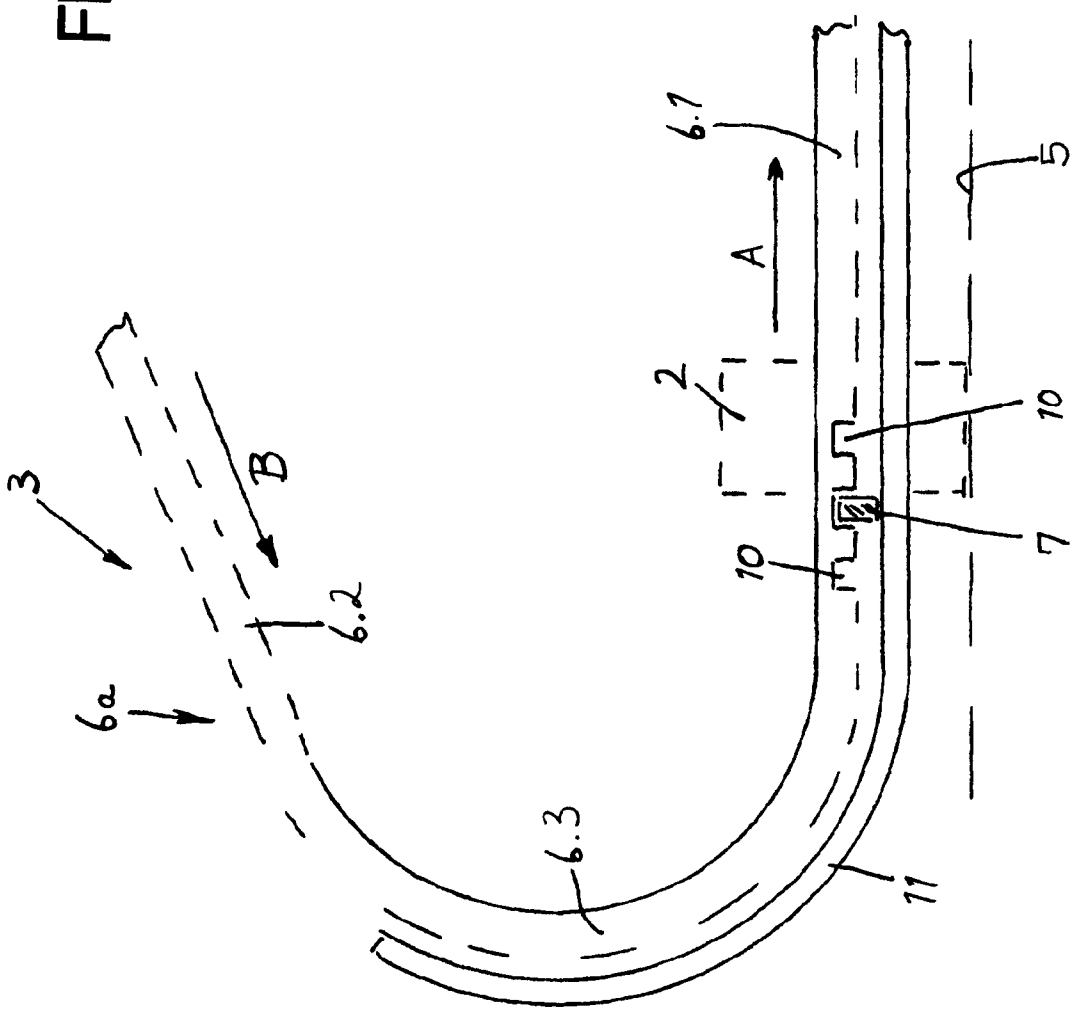

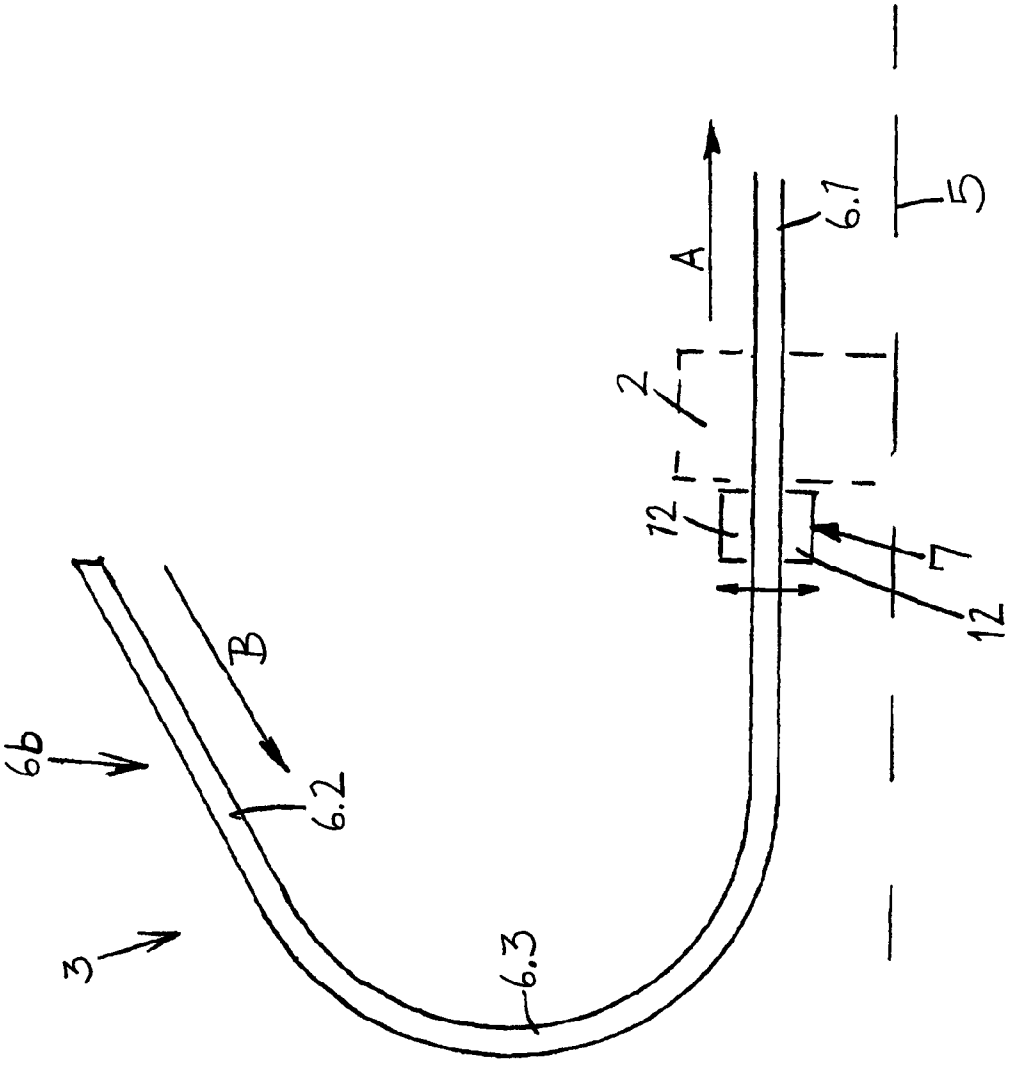

FIG. 3

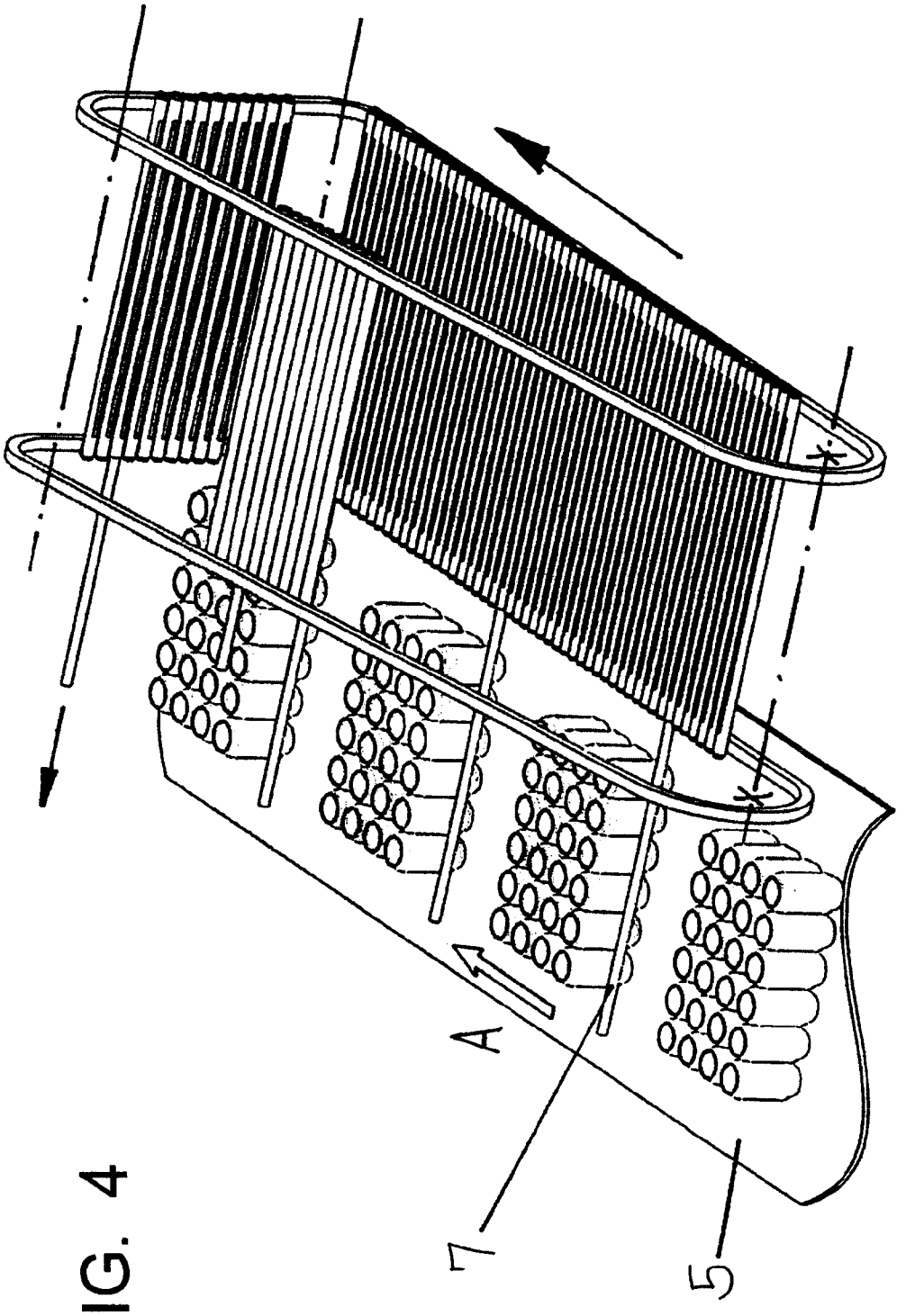

FIG. 4

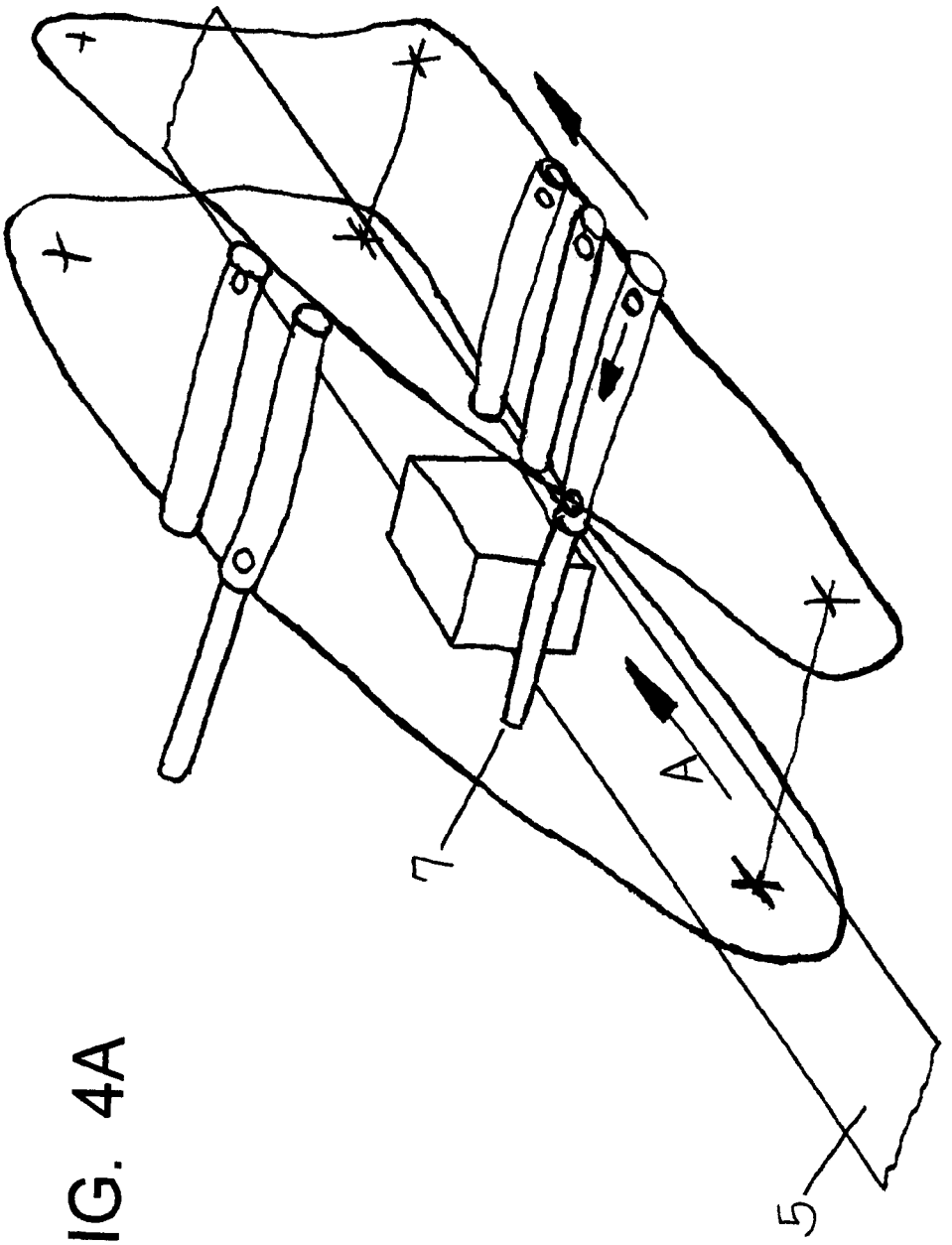

FIG. 4A

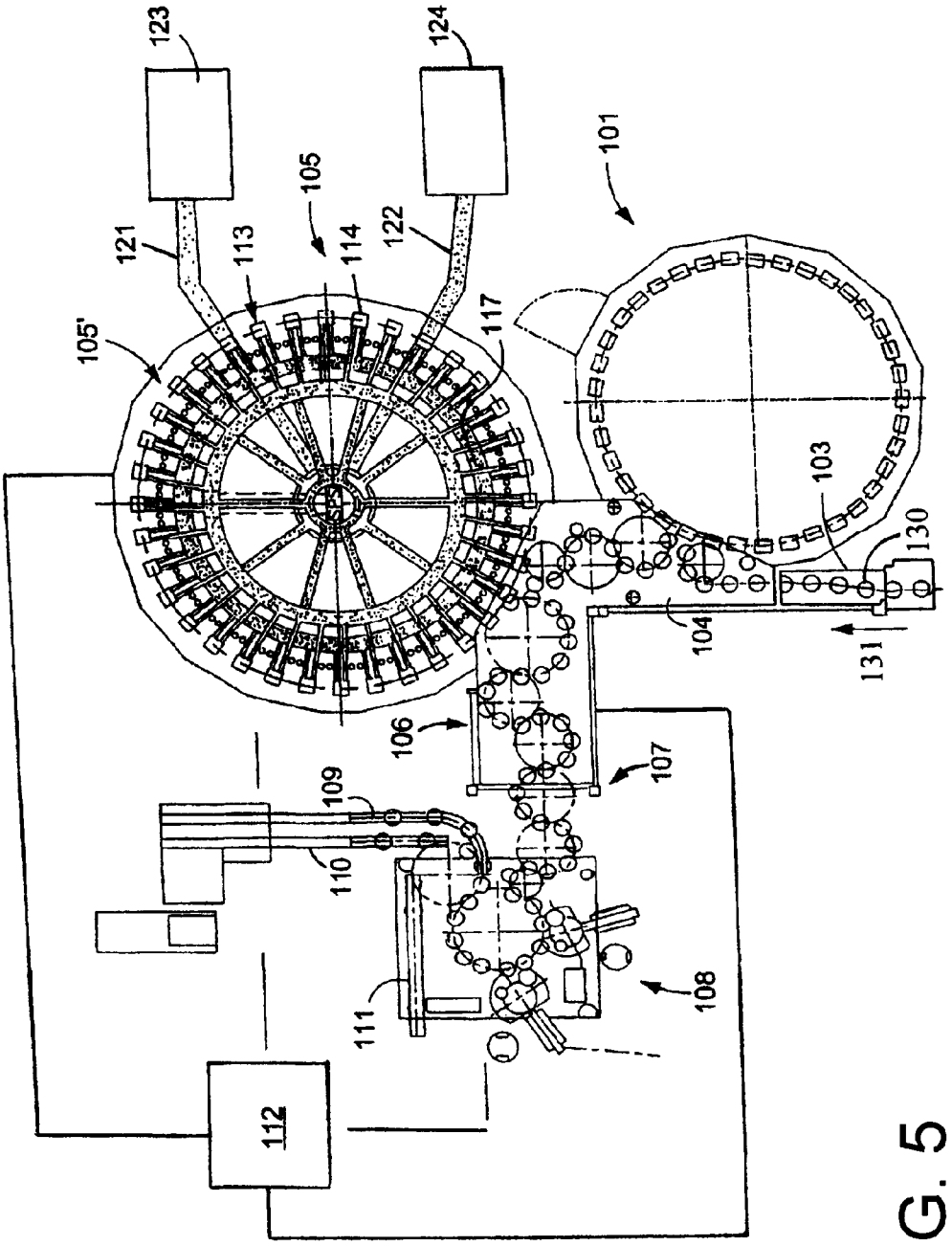
123
124
101
105
121
113
114
122
105'
117
103
130
104
131
106
107
109
110
108
111
112

FIG. 5

METHOD AND APPARATUS FOR TRANSPORTING GROUPS OF FILLED BEVERAGE BOTTLES TO A BEVERAGE BOTTLE PACKAGING MACHINE IN A BEVERAGE BOTTLING PLANT, AND A METHOD AND APPARATUS FOR TRANSPORTING GROUPS OF CONTAINERS TO A CONTAINER HANDLING MACHINE IN A CONTAINER PROCESSING PLANT

[0001] This application is a Continuation-In-Part application of International Patent Application No. PCT/EP2007/007811, filed on Sep. 7, 2007, which claims priority from Federal Republic of Germany Patent Application No. 10 2006 045 453.7, filed on Sep. 26, 2006. International Patent Application No. PCT/EP2007/007811 was pending as of the filing date of this application. The United States was an elected state in International Patent Application No. PCT/EP2007/007811.

BACKGROUND

[0002] 1. Technical Field

[0003] The present application relates to a method and apparatus for transporting groups of filled beverage bottles to a beverage bottle packaging machine in a beverage bottling plant, and a method and apparatus for transporting groups of containers to a container handling machine in a container processing plant.

[0004] 2. Background Information

[0005] Background information is for informational purposes only and does not necessarily admit that subsequently mentioned information and publications are prior art.

[0006] The present application relates to a transport system for transporting transport units that follow one another in a direction of transport of the system, having compartment elements that act on the transport elements or units and can be moved in the direction of transport by means of at least one drive element.

[0007] Some transport systems have various designs for transporting transport units, i.e. for transporting objects or products of various types, e.g. for transporting containers like bottles, cans, packs and groups or units compiled therefrom, with such systems widely used in the beverage industry. It is often necessary or desired to transport the individual transport units such that they have a defined spacing in the direction of transport. To maintain this spacing, it is essential to equip the corresponding transport tracks with a transport system having carriers, spacing elements or also compartment elements that act upon the transport units and essentially ensure or promote the desired spacing between the transport units. For purposes of simplification, the current application refers to compartment elements, even if these elements are designated as carriers or spacing elements in practice or other patent applications provided that they fulfill the identical or nearly identical function.

[0008] If such a transport track permits the optionally transport of transport units having a different length or size in the direction of transport, or if the distance between units, hereinafter "pitch spacing" varies, i.e. the units when viewed as a whole have a different format length, such transport tracks require or desire that the spacing in the direction of transport between the compartment elements on this moving drive element must or should be chosen to at least equal the largest format length, which results in larger gaps or spacings between transport units with smaller format lengths. The format length of a transport unit depends on the grouping of the products which make up the transport unit. For example, if a group of six cans are grouped to move along a conveyor with two rows of six cans each, or in the shape of a six-pack of cans, the format length of the group or unit is the length of two cans. Given the same conveying or transport speed, this means a reduction in throughput and/or an increase in dead time during processing or handling of the transport units fed to a handling machine, for example, via the transport track.

OBJECT OR OBJECTS

[0009] An object of the present application is to provide a transport system that avoids, restricts, and/or minimizes these disadvantages. A transport system for achieving this object is disclosed as a transport system for transporting transport units or bundles that follow one another in a direction of transport of the system. The transport system comprises compartment elements that act on the transport elements or bundles and can be moved in the direction of transport by means of at least one drive element. The compartment elements can be moved between an effective state and an ineffective state, in one possible embodiment for setting their pitch spacing as they act on the transport units or bundles.

SUMMARY

[0010] With the transport system according to the present application, the pitch spacing of the compartment elements acting on the transport units is adjustable and can thus be adapted to the format length of the transport units so that the transport system or a transport track equipped with this transport system can be operated with optimal throughput and dead times during processing or handling of the transported transport units can be reduced to a minimum.

[0011] There is a multiplicity of possible uses for a transport system according to the present application. For example, this transport system can be used as a transport system as such, in one possible embodiment in the form that the compartment elements form of overhead carriers that act on the transport units from above a stand or transport plane or surface for the transport units, or as a compartment unit to bring the transport units moved along the transport track into a defined pitch spacing. The transport system according to the present application is furthermore suitable for use as a function unit in a wide variety of processing and handling machines, such as in packing machines, machines for wrapping transport units or groups of transport units (packs) in film or shrink-wrap, or as a transport system in a synchronizing station, etc.

[0012] The above-discussed embodiments of the present invention will be described further herein below. When the word "invention" or "embodiment of the invention" is used in this specification, the word "invention" or "embodiment of the invention" includes "inventions" or "embodiments of the invention", that is the plural of "invention" or "embodiment of the invention". By stating "invention" or "embodiment of the invention", the Applicant does not in any way admit that the present application does not include more than one patentably and non-obviously distinct invention, and maintains that this application may include more than one patentably and non-obviously distinct invention. The Applicant hereby asserts that the disclosure of this application may include

more than one invention, and, in the event that there is more than one invention, that these inventions may be patentable and non-obvious one with respect to the other.

BRIEF DESCRIPTION OF THE DRAWINGS

[0013] The present application is described in greater detail below illustrated with the accompanying drawings, in which:

[0014] FIG. **1** shows a perspective view of the principle of the transport system according to the present application;

[0015] FIG. **1**A shows another perspective view of the principle of the transport system according to the present application;

[0016] FIGS. **2** and **3** each show a simplified view of a section of a transport element comprised of a belt;

[0017] FIG. **4** shows another embodiment of the present application; and

[0018] FIG. **5** shows schematically the main components of one possible embodiment example of a system for filling containers, in one possible embodiment, a beverage bottling plant for filling bottles with at least one liquid beverage, in which system or plant could possibly be utilized with at least one aspect, or several aspects, of the embodiments disclosed herein.

DESCRIPTION OF EMBODIMENT OR EMBODIMENTS

[0019] In the figures, **1** is a transport track for the transport of goods in the form of transport or product units **2** that follow one another in a direction of transport A, which units in the embodiment shown each comprise multiple containers or packs assembled into a group and are spaced and moved in the direction of transport A as a single or multi-lane flow of transport units.

[0020] The transport track **1** essentially comprises a transport system **3**, which affects the transport movement of the transport or product units **2**, as well as a carrier or transport unit **4** extending in the direction of transport A, which in the embodiment shown forms a horizontal or essentially horizontal transport or support surface **5** on which the bottom of transport or product units **2** rests and which forms a sliding or rolling surface, e.g. a roller track for the transport or product units **2**. The transport or support surface **5** in one possible embodiment comprises at least one motor-driven transport element supporting the movement of the transport or product units **2** in the direction of transport A, the transport speed of which element in this embodiment is somewhat less than the transport speed, and by means of which the transport or product units **2** are input or removed.

[0021] The transport system **3** essentially comprises two belt, chain or band transport or drive elements **6**, each of which forms an independent and driven rotary loop, which is guided by means of deflector rollers or wheels, some of which are driven, so that the loops formed by the drive elements **6** are arranged on both sides of the transport surface **5** so as to be parallel or virtually parallel to one another in a vertical or nearly vertical plane and parallel or virtually parallel to the direction of transport A.

[0022] The loop of each drive element **6** forms a lower leg indicated in FIG. **1** as **6.1**, which is runs parallel or essentially parallel to the plane of the transport surface **5** and at a distance from this plane that is in one possible embodiment less than the height of the transport or product units **2**. The loop of each drive element **6** also forms an upper leg indicated in FIG. **1** as **6.2**, which runs at a significantly greater distance above the plane of the transport surface **5**, or at a sufficient distance above the plain of the transport surface **5**. The transitions between the lower leg **6.1** and the upper leg **6.2** at the inlet **1.1** or the outlet **1.2** of the transport track are indicated as **6.3** and **6.4**, respectively.

[0023] The two drive elements **6** are driven synchronously or substantially synchronously or independently and at the same speed in the direction of the arrow B so that the leg **6.1** moves in the direction of transport A and the leg **6.2** moves opposite the direction of transport, in the direction B.

[0024] The transport system **3** also comprises multiple carriers or compartment elements **7** in the form of transverse bars, which when in use, i.e. in the active or effective state, are connected at each end to a drive element **6** so that the two drive elements **6** and the transverse bars or compartment elements **7** form a ladder-like structure and the transport or product units **2** standing on the transport surface **5** are carried along by the compartment elements **7** on the legs **6.1** and moved in the direction of transport A when the rotary drive elements **6** are driven.

[0025] At the inlet **1.1** of the transport track **1** and at the outlet **1.2** of the transport track **1**, the two drive elements **6** are routed around deflecting rollers so that, at the inlet **1.1**, the individual compartment element **7** can freely engage the transport or product unit **2** waiting there and the individual compartment element **7** can move upward at the outlet **1.2** and freely disengage from the respective transport, product unit, or bundle of containers **2**.

[0026] The unique feature of the transport track **1** or the transport system **3** lies in the fact that the pitch spacing between two compartment elements **7** following one another in the direction of transport A, is not fixed, in one possible embodiment to the legs **6.1**, but rather can be optimally adapted to the format length of the transport or product units or bundles of bottles **2**, i.e. to the size of these transport or product units or groups **2** in the direction of transport A, so that, for example, one and the same pitch spacing is maintained between two transport or product units **2** following one another in the direction of transport A regardless of their format length, thus avoiding excessively large gaps between individual transport or product units **2** of smaller format lengths. In one possible embodiment with transport or product units **2** having a reduced format length, this enables an optimal utilization of the transport track **1** at high throughput (transported transport or product units **2** per unit time) and reduced transport speed.

[0027] The format length of a transport unit depends on the grouping of the products which make up the transport unit. For example, if a group of six cans are grouped to move along a conveyor with two rows of six cans each, or in the shape of a six-pack of cans, the format length of the group or unit is the length of two cans. As seen in FIG. **1**, the format length of each unit or group **2** is the length of two cans.

[0028] To enable the aforementioned adaptation of the transport track **1** to the format lengths, the compartment elements **7** are non-permanently attached to the two drive elements **6** so that the compartment elements **7** can be attached to the drive elements **6** with a pitch spacing corresponding to the format length of the transport or product units **2** to be processed prior to starting the transport track **1**. To change formats, i.e. to transport or product units **2** with a different format length, the compartment elements **7** are repositioned on the drive elements **6**. The conveying or transport speed of the

transport system **3** and thus of the transport track **1** is determined by the speed at which the two rotary drive elements **6** are driven.

[0029] By means of the non-permanent attachment of the compartment elements **7** to the drive elements **6**, at least a portion of the compartment elements **7** can be moved from an active or effective state, in which they act upon the transport or product units **2**, to an inactive or ineffective state, in which the respective compartment elements **7** are removed from the drive elements **6**.

[0030] In one possible embodiment of the present application, the compartment elements **7** are removed from the drive elements **6** at the end of each rotation of the same and reattached at the start of each rotation of the drive elements **6** with the pitch spacing required or desired for the optimal transport of the transport or product units **2**. The transport system is therefore equipped with a magazine or collecting area or temporary storage area **8** for receiving the compartment elements **7**. The first available compartment element **7**, i.e. the bar **7** in the collecting area **8** closer to the inlet **1.1**, is removed from this magazine **8** by means of transfer wheels **9** and brought together with the two drive elements **6** at the inlet **1.1** of the transport track **1** so that the respective compartment element **7** is secured at the legs **6.1** by suitable means to the drive elements **6** and is carried along with these. In the area of the legs **6.2** of the loops formed by the drive elements **6**, the compartment elements **7** are released by the drive elements and enter the magazine **8**.

[0031] In this embodiment as well, the conveying or transport speed of the transport system **3** is determined by the speed at which the two rotary drive elements **6** are driven in. The time interval between the removal of sets of two compartment elements **7** from the magazine **8** is determined as a factor of the rotational speed of the drive elements **6**, the pitch spacing between the compartment elements and/or the corresponding spacing of the compartment elements **7** on the drive elements **6**. The magazine **8** is designed such that even with the shortest possible pitch spacing between two compartment elements **7** following one another in the direction of transport A, at least one compartment element **7** remains in the magazine **8**, and its capacity is sufficient to hold at least all of the compartment elements **7**.

[0032] In this embodiment, the pitch spacing between the compartment elements is adjusted by machine control without manual manipulation of the device itself as a function of the speed of rotation of the drive elements **6** by controlling the transfer interval. The pitch adjustment is set by manually entering a value in the machine controller when starting the transport track **1**, for example. In principle, it is also possible for the device to automatically adjust the pitch spacing between the compartment elements **7**; to do so, a suitable measuring instrument, such as an optoelectric measuring section, measures the format length of the transport or product units **2**, from which a computer, for example, calculates and sets the optimal spacing for the compartment elements **7**.

[0033] In this embodiment as well, the compartment elements **7** can be moved from an active or effective state, in which they act upon the transport or product units **2** and are connected to the drive elements **6**, to an inactive or ineffective state, in which the respective compartment elements **7** are removed from the drive elements **6** and placed in the magazine **8**, or temporarily stored in the collecting area **8**.

[0034] FIG. **1**A shows an embodiment of the present application, similar to that seen in FIG. **1**. FIG. **1**A additionally shows a notch **9***a* on the transfer wheel **9**. The transfer wheel **9** rotates in a counterclockwise direction independently from the rotation of the bands **6**. When the notch **9***a* meets the outlet of the magazine **8**, one bar or compartment element or elongated element **7** moves into the notch **9***a*. As the transfer wheel **9** continues to rotate, the bar **7** comes into contact with the rotating, engaging bands **6**. The bar **7** and the band **6** engage and connect.

[0035] The transfer wheels **9** are driven in rotation by the motor **60**. The motor **60** is operatively controlled by the controller or control device **62**. In one possible embodiment, the pitch spacing of the bars **7** can be determined by the speed of the transfer wheels **9**. For example, when the transfer wheels **9** are driven at a high speed, each bar **7** is transferred from the magazine **8** to the rotating bands **6** at a high rate, which could produce short distances between the bars **7** and therefore short pitch spacing. On the other hand, when the transfer wheels **9** are driven at a low speed, each bar **7** is transferred from the magazine **8** to the rotating bands **6** at a low rate, which could produce long distances between the bars **7** and therefore large pitch spacing.

[0036] In one possible embodiment according to the present application, each transfer wheel **9** comprises one notch **9***a* for the transfer of a bar or compartment element **7** to the rotating, engaging band or bands **6**. In another possible embodiment according to the present application, each transfer wheel **9** comprises a plurality of notches **9***a* for the transfer of a bar or compartment element **7** to the rotating, engaging band or bands **6**.

[0037] Also seen in FIG. **1**A is the ramp **8***a* of the magazine **8**. After a bar or elongated element **7** rotates along the length of the rotating, engaging bands **6**, the bar **7** is rotated to the leg **6.2**. As the bar **7** moves along the leg **6.2**, the ramp **8***a* allows the bars **7** and the bands **6** to be disengaged. The ramp **8***a* comprises an incline, which allows the bars **7** to slide toward the inlet of the magazine **8** and toward the leg **6.3**.

[0038] Further seen in FIG. **1**A is a plurality of wheels or rotors or rollers **50***a*, **50***b*, **51***a*, **51***b*, **52***a*, and **52***b* around which the rotating bands **6** are driven. In this embodiment, the wheels or rotors or rollers **50***a*, **50***b*, **52***a*, and **52***b* are driven by a motor or motors **61**. The motor **61** is operatively connected to the controller or control device **62**, which can vary the speed of the rotating bands or belts **6**. In other embodiments, one pair of wheels **50***a* and **50***b* may be driven while the other pairs of wheels **51***a*, **51***b*, **52***a*, and **52***b* are non-driven wheels. In such an embodiment, the wheels **51***a*, **51***b*, **52***a*, and **52***b* are rollers which guide the rotation of the bands **6**. In another possible embodiment, a plurality of motors **61** may be utilized to drive the rotating, engaging bands **6**.

[0039] In at least one possible embodiment of the present application, the pitch spacing of the bars or elongated elements **7** can be adjusted automatically or by the controller **62**. In such an embodiment with automatic adjustment of the pitch spacing, any the pitch spacing can be adjusted quickly and flexibly.

[0040] In another embodiment, such as that which is seen in FIG. **4**, the pitch spacing can be set manually. In this embodiment, the transport system **1** may need to be shut down before an adjustment in pitch spacing can be made. This may desire more time to make an adjustment than the embodiment in which automatic adjustments of pitch spacing may be made. In addition, changes in pitch spacing may not be made quickly

[0041] The non-permanent connection of the compartment elements **7** to the drive elements **6** can be realized in a variety of ways. FIG. **2** shows by way of example a drive element **6***a* in the form of a belt having on the outside of the loop which it forms a multiplicity of seats **10**, each of which accepts one end of a compartment element **7**. For example, a seat **10** could comprise a groove in the drive element or loop **6**, into which the bar or compartment element **7** is placed, and then the bar **7** is driven by the rotating drive element **6**. **11** indicates the permanent or nonremovable or removable guide that prevents, restricts, and/or minimizes the respective compartment element **7** from sliding out of the seat **10** and extends for this purpose along each drive element **6** where the respective compartment element **7** is held to the drive element **6**. Instead of the fixed guide **11**, auxiliary belts can be provided that rotate in the same direction and at the same speed as the respective drive element **6***a*, which auxiliary belts are run such that they secure the compartment elements **7** in the seats **10** of the rotating drive elements **6***a* until the magazine **8** is reached, upon which the compartment elements are released so that they can be removed from the drive elements **6***a*. In this embodiment, the pitch spacing between the compartment elements **7** can be adjusted in steps.

[0042] FIG. **3** shows an embodiment in which the rotating drive elements **6***b* are each formed by a smooth belt, and the compartment elements **7** have a clip **12** on both ends for clipping to a drive element **6***b*. The clips **12** are designed such that they clip onto the respective drive element **6***b* upon transfer from the magazine **8** and detach from the respective drive element **6***b* upon return to the magazine **8**, for example by means of an external control element provided on the path of motion of the drive element **6***b*. In this embodiment, the pitch spacing between the compartment elements **7** can be adjusted steplessly.

[0043] The present application was described above with reference to possible embodiments. Common to these embodiments is that the compartment elements **7** are not permanently connected to the drive elements **6**, **6***a* or **6***b*, but rather the pitch spacing of the compartment elements on the drive elements can be adjusted appropriately to the format length of the transport or product lines **2**, whereby the compartment elements **7** on the drive elements **6**, **6***a*, **6***b* are then actively involved in the transport of the transport or product units **2**.

[0044] In principle, it is also possible to design the transport system such that a multiplicity of compartment elements follow one another in the direction of rotation of one or more drive elements, the pitch spacing of which compartment elements corresponds to the optimal spacing for the transport of the transport or product units with the smallest format length. When the transport system is in operation, those compartment elements are activated for the transport of the transport or product units, i.e. brought into a position to affect the transport of the transport or product units, whose spacing optimally corresponds to the format length of the transport or product units being processed. With this embodiment as well, at least a portion of the compartment elements can be moved from an active or effective state, in which they act upon the transport or product units, to an inactive or ineffective state, in which they do not act upon the transport or product units.

[0045] It was also assumed above that the drive elements **6**, **6***a* or **6***b* forming the transport system each form loops arranged in vertical or virtually vertical planes so that the compartment elements **7** descend from above onto the transport or product units **2** at the inlet **1.1** and move up and away from the transport and product units **2** at the outlet **1.2**. As shown in FIG. **4**, it is also possible given compartment elements **7** of the appropriate form and number to provide said compartment elements on rotating drive elements, whereby, for example, the compartment elements **7** approach the transported materials from the side at the inlet of the transport track and move laterally away from the transport or product units again at the end of the transport track.

[0046] With the device shown in FIG. **4** and FIG. **4**A, it is also possible to set the desired spacings of the multiple compartment elements **7** by manually activating those that are necessary or desired to achieve these spacings. The compartment elements can be configured as tubes or bushings with an extensible internal element that can be locked into a first, inactive position and in a second, active position. These can be activated when reconfiguring the device, for example, by extending a selection of elements, whereby these are evenly spaced relative to one another.

[0047] It was assumed above that the compartment elements **7** form carriers that push the transported goods, i.e. the product groups **2** in the case of the embodiment shown in FIG. **1**, in the direction of transport A. In principle it is also possible to use the transport system **3** as a grouping or compartment unit, in one possible embodiment as a transport track configured as a grouping line. In this case, the transported goods are moved in the direction of transport A on the transport surface of the carrier system **4**, which transport surface comprises at one least conveyor, at a somewhat higher speed than the compartment elements **7**, so that the transported goods come to rest against the compartment element **7** ahead of the transported goods, thus assuring the necessary or desired spacing between the transported goods.

[0048] FIG. **5** shows schematically the main components of one possible embodiment example of a system for filling containers, specifically, a beverage bottling plant for filling bottles **130** with at least one liquid beverage, in accordance with at least one possible embodiment, in which system or plant could possibly be utilized at least one aspect, or several aspects, of the embodiments disclosed herein.

[0049] FIG. **5** shows a rinsing arrangement or rinsing station **101**, to which the containers, namely bottles **130**, are fed in the direction of travel as indicated by the arrow **131**, by a first conveyer arrangement **103**, which can be a linear conveyor or a combination of a linear conveyor and a starwheel. Downstream of the rinsing arrangement or rinsing station **101**, in the direction of travel as indicated by the arrow **131**, the rinsed bottles **130** are transported to a beverage filling machine **105** by a second conveyer arrangement **104** that is formed, for example, by one or more starwheels that introduce bottles **130** into the beverage filling machine **105**.

[0050] The beverage filling machine **105** shown is of a revolving or rotary design, with a rotor **105'**, which revolves around a central, vertical machine axis. The rotor **105'** is designed to receive and hold the bottles **130** for filling at a plurality of filling positions **113** located about the periphery of the rotor **105'**. At each of the filling positions **103** is located a filling arrangement **114** having at least one filling device, element, apparatus, or valve. The filling arrangements **114** are designed to introduce a predetermined volume or amount of liquid beverage into the interior of the bottles **130** to a predetermined or desired level.

[0051] The filling arrangements **114** receive the liquid beverage material from a toroidal or annular vessel **117**, in which

a supply of liquid beverage material is stored under pressure by a gas. The toroidal vessel **117** is a component, for example, of the revolving rotor **105'**. The toroidal vessel **117** can be connected by means of a rotary coupling or a coupling that permits rotation. The toroidal vessel **117** is also connected to at least one external reservoir or supply of liquid beverage material by a conduit or supply line. In the embodiment shown in FIG. **5**, there are two external supply reservoirs **123** and **124**, each of which is configured to store either the same liquid beverage product or different products. These reservoirs **123**, **124** are connected to the toroidal or annular vessel **117** by corresponding supply lines, conduits, or arrangements **121** and **122**. The external supply reservoirs **123**, **124** could be in the form of simple storage tanks, or in the form of liquid beverage product mixers, in at least one possible embodiment.

[0052] As well as the more typical filling machines having one toroidal vessel, it is possible that in at least one possible embodiment there could be a second toroidal or annular vessel which contains a second product. In this case, each filling arrangement **114** could be connected by separate connections to each of the two toroidal vessels and have two individually-controllable fluid or control valves, so that in each bottle **130**, the first product or the second product can be filled by means of an appropriate control of the filling product or fluid valves.

[0053] Downstream of the beverage filling machine **105**, in the direction of travel of the bottles **130**, there can be a beverage bottle closing arrangement or closing station **106** which closes or caps the bottles **130**. The beverage bottle closing arrangement or closing station **106** can be connected by a third conveyer arrangement **107** to a beverage bottle labeling arrangement or labeling station **108**. The third conveyor arrangement may be formed, for example, by a plurality of starwheels, or may also include a linear conveyor device.

[0054] In the illustrated embodiment, the beverage bottle labeling arrangement or labeling station **108** has at least one labeling unit, device, or module, for applying labels to bottles **130**. In the embodiment shown, the labeling arrangement **108** is connected by a starwheel conveyer structure to three output conveyer arrangements: a first output conveyer arrangement **109**, a second output conveyer arrangement **110**, and a third output conveyer arrangement **111**, all of which convey filled, closed, and labeled bottles **130** to different locations.

[0055] The first output conveyer arrangement **109**, in the embodiment shown, is designed to convey bottles **130** that are filled with a first type of liquid beverage supplied by, for example, the supply reservoir **123**. The second output conveyer arrangement **110**, in the embodiment shown, is designed to convey bottles **130** that are filled with a second type of liquid beverage supplied by, for example, the supply reservoir **124**. The third output conveyer arrangement **111**, in the embodiment shown, is designed to convey incorrectly labeled bottles **130**. To further explain, the labeling arrangement **108** can comprise at least one beverage bottle inspection or monitoring device that inspects or monitors the location of labels on the bottles **130** to determine if the labels have been correctly placed or aligned on the bottles **130**. The third output conveyer arrangement **111** removes any bottles **130** which have been incorrectly labeled as determined by the inspecting device.

[0056] The beverage bottling plant can be controlled by a central control arrangement **112**, which could be, for example, computerized control system that monitors and controls the operation of the various stations and mechanisms of the beverage bottling plant.

[0057] Transport system for transporting transport units that follow one another in a direction of transport of the system, having compartment elements that act on the transport units, can be moved in the direction of transport by means of at least one drive element, and the pitch spacing of which can be adjusted.

[0058] One feature or aspect of an embodiment is believed at the time of the filing of this patent application to possibly reside broadly in a transport system for transporting transport units **2** that follow one another in a direction of transport A of the system, having compartment elements **7** that act on the transport elements **2** and can be moved in the direction of transport A by means of at least one drive element **6**, **6***a*, **6***b*, wherein the compartment elements **7** can be moved between an effective state and an ineffective state, in one possible embodiment for setting their pitch spacing as they act on the transport units **2**.

[0059] Another feature or aspect of an embodiment is believed at the time of the filing of this patent application to possibly reside broadly in a transport system for transporting transport units **2** that follow one another in a direction of transport A of the system, having compartment elements **7** that act on the transport elements **2** and can be moved in the direction of transport A by means of at least one drive element **6**, **6***a*, **6***b*, wherein the compartment elements **7** can be force connected at least temporarily to the at least one drive element **6**, **6***a*, **6***b*, in one possible embodiment for setting their pitch spacing as they act on the transport units **2**.

[0060] Yet another feature or aspect of an embodiment is believed at the time of the filing of this patent application to possibly reside broadly in the transport system, wherein the compartment elements **7** can also be mechanically connected at least temporarily to the at least one drive element **6**, **6***a*, **6***b*.

[0061] Still another feature or aspect of an embodiment is believed at the time of the filing of this patent application to possibly reside broadly in the transport system, wherein the compartment elements **7** form rests for a trailing end of the transport units **2** relative to the direction of transport A.

[0062] A further feature or aspect of an embodiment is believed at the time of the filing of this patent application to possibly reside broadly in the transport system, wherein the compartment elements **7** form rests for a leading end of the transport units **2** relative to the direction of transport A.

[0063] Another feature or aspect of an embodiment is believed at the time of the filing of this patent application to possibly reside broadly in the transport system, wherein the compartment elements **7** can be moved with the at least one drive element **6**, **6***a*, **6***b* in the direction of transport A between an inlet **1.1** and an outlet **1.2** of a transport track **1**.

[0064] Yet another feature or aspect of an embodiment is believed at the time of the filing of this patent application to possibly reside broadly in the transport system, wherein the pitch spacing of the compartment elements **7** on the at least one drive element **6**, **6***a* can be adjusted in steps.

[0065] Still another feature or aspect of an embodiment is believed at the time of the filing of this patent application to possibly reside broadly in the transport system, wherein the pitch spacing of the compartment elements **7** on the at least one drive element **6**, **6***b* can be adjusted steplessly.

[0066] A further feature or aspect of an embodiment is believed at the time of the filing of this patent application to

possibly reside broadly in the transport system, wherein the pitch spacing of the compartment elements **7** on the at least one drive element **6**, **6***a*, **6***b* can be adjusted manually.

[0067] Another feature or aspect of an embodiment is believed at the time of the filing of this patent application to possibly reside broadly in the transport system, comprising at least one magazine **8** for receiving the compartment elements **7** removed from the at least one drive element **6**, **6***a*.

[0068] Yet another feature or aspect of an embodiment is believed at the time of the filing of this patent application to possibly reside broadly in the transport system, wherein the at least one magazine **8** is provided at a section **6.2** of the rotational path of the at least one driven rotary drive element **6**, **6***a* downstream of the outlet of the transport track **1**.

[0069] Still another feature or aspect of an embodiment is believed at the time of the filing of this patent application to possibly reside broadly in the transport system, wherein the compartment elements **7** are separated from the at least one drive element **6**, **6***a* at a section **6.2** of the rotational path of the same downstream of the outlet **1.2** of the transport track **1** and directed into the at least one magazine **8**, from which the compartment elements **7** are removed one at a time and in the region of the inlet **1.1** of the transport track **1** are at least force reconnected in the pitch spacing to the at least one rotating drive element **6**, **6***a*, **6***b*.

[0070] A further feature or aspect of an embodiment is believed at the time of the filing of this patent application to possibly reside broadly in the transport system, wherein at the outlet of the magazine **8**, there is transfer unit, for example in the form of at least one transfer wheel **9** for bringing the compartment elements **7** together with the at least one drive element **6**, **6***a*, **6***b*.

[0071] One feature or aspect of an embodiment is believed at the time of the filing of this patent application to possibly reside broadly in the transport system, wherein the at least one drive element is an endless, driven rotary belt, chain or band element **6**, **6***a*, **6***b* forming a closed loop, and one leg **6.1** of the loop having the effective compartment elements **7** acting on the transport units moves in the direction of transport A.

[0072] Another feature or aspect of an embodiment is believed at the time of the filing of this patent application to possibly reside broadly in the transport system, comprising at least two endless, driven rotary belt, chain and/or band transport elements **6**, **6***a*, **6***b* each of which forms a closed loop, are arranged with the planes of their loops at some distance apart and parallel or virtually parallel to one another and between which extend the active compartment elements **7**.

[0073] Yet another feature or aspect of an embodiment is believed at the time of the filing of this patent application to possibly reside broadly in the transport system, wherein the at least two drive elements **6**, **6***a*, **6***b* are oriented with the planes of their loops parallel or virtually parallel to the direction of transport A and perpendicular or essentially perpendicular to a support or transport plane for the transport units **2** such that each effective compartment element **7** approaches the transport units **2** from above in the area of the inlet **1.1** of the transport track **1** and are moved up and away from the transport units **2** at the outlet of the transport track **1**.

[0074] Still another feature or aspect of an embodiment is believed at the time of the filing of this patent application to possibly reside broadly in the transport system, wherein the at least one magazine **8** is provided at a leg **6.2** of the loop formed by the drive element **6**, **6***a* leading back to the inlet **1.1** of the transport track **1**.

[0075] A further feature or aspect of an embodiment is believed at the time of the filing of this patent application to possibly reside broadly in the transport system, comprising a support or transport surface **5** for the transport units **2**.

[0076] Another feature or aspect of an embodiment is believed at the time of the filing of this patent application to possibly reside broadly in the transport system, wherein the support or transport surface **5** is designed a sliding or rolling surface, e.g. a roller track.

[0077] Yet another feature or aspect of an embodiment is believed at the time of the filing of this patent application to possibly reside broadly in the transport system, wherein the support or transport surface **5** comprises at least one transport element, for example at least one rotary driven transport band or at least one transport chain.

[0078] Still another feature or aspect of an embodiment is believed at the time of the filing of this patent application to possibly reside broadly in the transport system, wherein the compartment elements **7** are brought from an ineffective state to an effective state for setting their pitch spacing automatically and without manual intervention.

[0079] A further feature or aspect of an embodiment is believed at the time of the filing of this patent application to possibly reside broadly in the transport system, wherein the compartment elements **7** are manually brought from an ineffective state to an effective state for setting their pitch spacing.

[0080] Another feature or aspect of an embodiment is believed at the time of the filing of this patent application to possibly reside broadly in the device, wherein the compartment elements **7** are permanently or unremovably or removably connected to the transport system **3**.

[0081] The components disclosed in the various publications, disclosed or incorporated by reference herein, may possibly be used in possible embodiments of the present invention, as well as equivalents thereof.

[0082] The purpose of the statements about the technical field is generally to enable the Patent and Trademark Office and the public to determine quickly, from a cursory inspection, the nature of this patent application. The description of the technical field is believed, at the time of the filing of this patent application, to adequately describe the technical field of this patent application. However, the description of the technical field may not be completely applicable to the claims as originally filed in this patent application, as amended during prosecution of this patent application, and as ultimately allowed in any patent issuing from this patent application. Therefore, any statements made relating to the technical field are not intended to limit the claims in any manner and should not be interpreted as limiting the claims in any manner.

[0083] The appended drawings in their entirety, including all dimensions, proportions and/or shapes in at least one embodiment of the invention, are accurate and are hereby included by reference into this specification.

[0084] The background information is believed, at the time of the filing of this patent application, to adequately provide background information for this patent application. However, the background information may not be completely applicable to the claims as originally filed in this patent application, as amended during prosecution of this patent application, and as ultimately allowed in any patent issuing from this patent application. Therefore, any statements made relating to the background information are not intended to limit the claims in any manner and should not be interpreted as limiting the claims in any manner.

[0085] All, or substantially all, of the components and methods of the various embodiments may be used with at least one embodiment or all of the embodiments, if more than one embodiment is described herein.

[0086] The purpose of the statements about the object or objects is generally to enable the Patent and Trademark Office and the public to determine quickly, from a cursory inspection, the nature of this patent application. The description of the object or objects is believed, at the time of the filing of this patent application, to adequately describe the object or objects of this patent application. However, the description of the object or objects may not be completely applicable to the claims as originally filed in this patent application, as amended during prosecution of this patent application, and as ultimately allowed in any patent issuing from this patent application. Therefore, any statements made relating to the object or objects are not intended to limit the claims in any manner and should not be interpreted as limiting the claims in any manner.

[0087] All of the patents, patent applications and publications recited herein, and in the Declaration attached hereto, are hereby incorporated by reference as if set forth in their entirety herein.

[0088] The summary is believed, at the time of the filing of this patent application, to adequately summarize this patent application. However, portions or all of the information contained in the summary may not be completely applicable to the claims as originally filed in this patent application, as amended during prosecution of this patent application, and as ultimately allowed in any patent issuing from this patent application. Therefore, any statements made relating to the summary are not intended to limit the claims in any manner and should not be interpreted as limiting the claims in any manner.

[0089] It will be understood that the examples of patents, published patent applications, and other documents which are included in this application and which are referred to in paragraphs which state "Some examples of . . . which may possibly be used in at least one possible embodiment of the present application . . . " may possibly not be used or useable in any one or more embodiments of the application.

[0090] The sentence immediately above relates to patents, published patent applications and other documents either incorporated by reference or not incorporated by reference.

[0091] U.S. Pat. No. 7,481,309, issue date Jan. 27, 2009, inventors Stefan WAGNER, Stefan WILLEMSEN, Bernd COX and Manfred VAN TRIEL, Attorney Docket No. NHL-HOL-86-C, and title "METHOD OF SEPARATING, SYNCHRONIZING AND COMPACTING PACKED GROUPS OF ARTICLES," and its corresponding parent application, having U.S. patent application Ser. No. 10/962,183, having the filing date Oct. 8, 2004, and Attorney Docket Number NHL-HOL-86, are hereby incorporated by reference as if set forth in their entirety herein.

[0092] Some examples of shrink wrapping machines or machines for wrapping items in plastic film which may possibly be utilized or adapted for use in at least one possible embodiment may possibly be found in the following U.S. Pat. No. 6,826,893, entitled "Apparatus for wrapping products with plastic film;" U.S. Pat. No. 6,739,115, entitled "Equipment for wrapping groups of products in plastic film;" U.S. Pat. No. 5,878,555, entitled "Apparatus for wrapping articles in plastic film;" U.S. Pat. No. 5,787,691, entitled "Apparatus for wrapping articles in plastic film;" U.S. Pat. No. 5,519,983, entitled "Shrink wrap packaging system with an ultrasonic side sealer;" U.S. Pat. No. 4,956,963, entitled "Method of sealing a shrink wrap package;" U.S. Pat. No. 4,873,814, entitled "Method of making a shrink wrap package;" U.S. Pat. No. 4,214,419, entitled "Collating and shrink wrap packaging apparatus;" U.S. Pat. No. 6,484,475, entitled "Modular packaging machine;" U.S. Pat. No. 4,694,633, entitled "Film wrapping machine;" U.S. Pat. No. 4,118,916, entitled "Thermoplastic wrapping machine;" U.S. Pat. No. 4,118,916, entitled "Thermoplastic wrapping machine;" U.S. Pat. No. 5,371,999, entitled "Shrink film wrapping machine;" U.S. Pat. No. 4,748,795, entitled "Film wrapping machine;" and U.S. Pat. No. 5,115,620, entitled "Wrapping machine."

[0093] The Innopack packaging machine, manufactured by KHS Maschinen und Anlagenbau AG, is an example of a packaging machine which may possibly be utilized or adapted for use in at least one possible embodiment. Some other examples of packaging machines which may possibly be utilized or adapted for use in at least one possible embodiment may possibly be found in the following U.S. Pat. No. 4,964,260, entitled "Packaging machine for cardboard boxes and process for packaging articles in cardboard boxes;" U.S. Pat. No. 4,785,610, entitled "Automatic machine for packaging products of different kinds in boxes;" U.S. Pat. No. 5,265,398, entitled "Automatic counting and boxing machine;" U.S. Pat. No. 5,943,847, entitled "Packaging machine for multi-packs;" U.S. Pat. No. 5,937,620, entitled "Packaging machine for multi-packs;" U.S. Pat. No. 5,711,137, entitled "Packaging machine and method of packaging articles;" and U.S. Pat. No. 5,706,633, entitled "Packaging machine and method of packaging articles."

[0094] All of the patents, patent applications or patent publications, which were cited in the International Search Report dated Dec. 19, 2007, and/or cited elsewhere are hereby incorporated by reference as if set forth in their entirety herein as follows: WO 99/65776, having the title "TRANSFER MECHANISM," published on Dec. 23, 1999; GB 914,155, having the title "IMPROVEMENTS IN OR RELATING TO CONVEYORS," published on Dec. 28, 1962; U.S. Pat. No. 4,569,183, having the title "SELF-ADJUSTING PACKAGING MACHINE," published on Feb. 11, 1986; US 2001/032775, having the title "SYSTEM FOR CONVEYING OBJECTS," published on Oct. 25, 2001; WO 97/46452, having the title "ARTICLE PACKAGING MACHINE WHICH IMPROVED OVERHEAD FLIGHT ASSEMBLY," published on Dec. 11, 1997; and GB 1,382,180, having the title "IMPROVEMENTS IN OR RELATING TO CONVEYORS," published Jan. 29, 1975.

[0095] The patents, patent applications, and patent publication listed above in the preceding four paragraphs, beginning with the phrase: "U.S. Pat. No. 7,481,309 . . . " and ending with the phrase: " . . . published Jan. 29, 1975," are herein incorporated by reference as if set forth in their entirety. The purpose of incorporating U.S. patents, Foreign patents, publications, etc. is solely to provide additional information relating to technical features of one or more embodiments, which information may not be completely disclosed in the wording in the pages of this application. Words relating to the opinions and judgments of the author and not directly relating to the technical details of the description of the embodiments therein are not incorporated by reference. The words all, always, absolutely, consistently, preferably, guarantee, particularly, constantly, ensure, necessarily, immediately, endlessly, avoid, exactly, continually, expediently,

need, must, only, perpetual, precise, perfect, require, requisite, simultaneous, total, unavoidable, and unnecessary, or words substantially equivalent to the above-mentioned words in this sentence, when not used to describe technical features of one or more embodiments, are not considered to be incorporated by reference herein.

[0096] The corresponding foreign and international patent publication applications, namely, Federal Republic of Germany Patent Application No. 10 2006 045 453.7, filed on Sep. 26, 2006, having inventors Josef DÜPPER, Thomas LELIE, and Ludger PAULS, and DE-OS 10 2006 045 453.7 and DE-PS 10 2006 045 453.7, and International Application No. PCT/EP2007/007811, filed on Sep. 7, 2007, having WIPO Publication No. WO 2008/037336 and inventors Josef DÜPPER, Thomas LELIE, and Ludger PAULS, are hereby incorporated by reference as if set forth in their entirety herein for the purpose of correcting and explaining any possible misinterpretations of the English translation thereof. In addition, the published equivalents of the above corresponding foreign and international patent publication applications, and other equivalents or corresponding applications, if any, in corresponding cases in the Federal Republic of Germany and elsewhere, and the references and documents cited in any of the documents cited herein, such as the patents, patent applications and publications, are hereby incorporated by reference as if set forth in their entirety herein.

[0097] The purpose of incorporating the Foreign equivalent patent application PCT/EP2007/007811 and German Patent Application 10 2006 045 453.7 is solely for the purpose of providing a basis of correction of any wording in the pages of the present application, which may have been mistranslated or misinterpreted by the translator. Words relating to opinions and judgments of the author and not directly relating to the technical details of the description of the embodiments therein are not to be incorporated by reference. The words all, always, absolutely, consistently, preferably, guarantee, particularly, constantly, ensure, necessarily, immediately, endlessly, avoid, exactly, continually, expediently, need, must, only, perpetual, precise, perfect, require, requisite, simultaneous, total, unavoidable, and unnecessary, or words substantially equivalent to the above-mentioned word in this sentence, when not used to describe technical features of one or more embodiments, are not generally considered to be incorporated by reference herein.

[0098] Statements made in the original foreign patent applications PCT/EP2007/007811 and DE 10 2006 045 453.7 from which this patent application claims priority which do not have to do with the correction of the translation in this patent application are not to be included in this patent application in the incorporation by reference.

[0099] All of the references and documents, cited in any of the documents cited herein, are hereby incorporated by reference as if set forth in their entirety herein. All of the documents cited herein, referred to in the immediately preceding sentence, include all of the patents, patent applications and publications cited anywhere in the present application.

[0100] The description of the embodiment or embodiments is believed, at the time of the filing of this patent application, to adequately describe the embodiment or embodiments of this patent application. However, portions of the description of the embodiment or embodiments may not be completely applicable to the claims as originally filed in this patent application, as amended during prosecution of this patent application, and as ultimately allowed in any patent issuing from this patent application. Therefore, any statements made relating to the embodiment or embodiments are not intended to limit the claims in any manner and should not be interpreted as limiting the claims in any manner.

[0101] The details in the patents, patent applications and publications may be considered to be incorporable, at applicant's option, into the claims during prosecution as further limitations in the claims to patentably distinguish any amended claims from any applied prior art.

[0102] The purpose of the title of this patent application is generally to enable the Patent and Trademark Office and the public to determine quickly, from a cursory inspection, the nature of this patent application. The title is believed, at the time of the filing of this patent application, to adequately reflect the general nature of this patent application. However, the title may not be completely applicable to the technical field, the object or objects, the summary, the description of the embodiment or embodiments, and the claims as originally filed in this patent application, as amended during prosecution of this patent application, and as ultimately allowed in any patent issuing from this patent application. Therefore, the title is not intended to limit the claims in any manner and should not be interpreted as limiting the claims in any manner.

[0103] The abstract of the disclosure is submitted herewith as required by 37 C.F.R. §1.72(b). As stated in 37 C.F.R. §1.72(b):

> **[0104]** A brief abstract of the technical disclosure in the specification must commence on a separate sheet, preferably following the claims, under the heading "Abstract of the Disclosure." The purpose of the abstract is to enable the Patent and Trademark Office and the public generally to determine quickly from a cursory inspection the nature and gist of the technical disclosure. The abstract shall not be used for interpreting the scope of the claims.

Therefore, any statements made relating to the abstract are not intended to limit the claims in any manner and should not be interpreted as limiting the claims in any manner.

[0105] The embodiments of the invention described herein above in the context of the preferred embodiments are not to be taken as limiting the embodiments of the invention to all of the provided details thereof, since modifications and variations thereof may be made without departing from the spirit and scope of the embodiments of the invention.

At Least Partial Nomenclature

[0106] **1** Transport track
[0107] **1.1** Inlet of the transport track **1**
[0108] **1.2** Outlet of the transport track **1**
[0109] **2** Transport or product unit
[0110] **3** Transport system
[0111] **4** Carrier system
[0112] **5** Support or transport surface
[0113] **6**, **6***a*, **6***b* Rotating drive element
[0114] **6.1**, **6.2**, **6.3**, **6.4** Legs of the loop formed by the drive element **6**
[0115] **7** Transverse bar or compartment elements
[0116] **8** Magazine
[0117] **9** Transfer wheel
[0118] **10** Seat
[0119] **11** Guide
[0120] **12** Clip
[0121] A Direction of transport
[0122] B Direction of rotation of the transport element **6**

What is claimed is:

1. A method of transporting groups of filled beverage bottles to a beverage bottle packaging machine, such as a beverage bottle shrink wrapping machine or a beverage bottle cartoning machine, in a beverage bottling plant, said method comprising the steps of:

(A) feeding a first group of filled bottles into a transport system on a transport track;

(B) rotating a sole one of an at least one rotating band being disposed on a first side of said transport track;

(C) removing a first bar from a plurality of bars in a bar collecting area, said plurality of bars in said bar collecting area not being in contact with said sole rotating band;

said first bar being:

positionally adjustable; and

configured to be engaged at a plurality of positions on said sole rotating band;

said sole rotating band being configured to engage said plurality of bars removed from said bar collecting area, one bar after another bar, in order to permit a plurality of bars to be engaged substantially simultaneously with said sole rotating, engaging band on said first side of said transport track;

(D) engaging a first end of said first bar on said sole rotating, engaging band on said first side of said transport track in one of a plurality of positions on said sole rotating, engaging band on said first side of said transport track;

(E) moving said first bar with said sole rotating, engaging band on said first side of said transport track along at least a portion of said transport track;

(F) affecting the movement of said first group of filled bottles on said transport track with said first bar;

(G) feeding a second group of filled bottles into said transport system on said transport track;

(H) removing a second bar from said plurality of bars in said bar collecting area, said second bar being:

positionally adjustable; and

configured to be engaged at a plurality of positions on said sole rotating, engaging band on said first side of said transport track;

(I) engaging a first end of said second bar on said sole rotating, engaging band on said first side of said transport track in one of said plurality of positions on said sole rotating, engaging band on said first side of said transport track, upon a predetermined gap of space being created between said first group of filled bottles and said second group of filled bottles in order to transport groups of filled bottles to said beverage bottle packaging machine at a predetermined rate configured to minimize delays in said beverage bottle packaging machine;

(J) moving said second bar with said sole rotating, engaging band on said first side of said transport track along said at least a portion of said transport track;

(K) affecting the movement of said second group of filled bottles on said transport track with said second bar and maintaining said predetermined gap of space between said first group of filled bottles and said second group of filled bottles;

(L) transporting said first group of filled bottles to said beverage bottle packaging machine;

(M) moving said first bar away from said transport track with said sole rotating, engaging band on said first side of said transport track upon said first group of filled bottles exiting said transport system;

(N) disengaging said first end of said first bar from said sole rotating, engaging band on said first side of said transport track;

(O) returning said first bar to said bar collecting area;

(P) transporting said second group of filled bottles to said beverage bottle packaging machine;

(Q) moving said second bar away from said transport track with said sole rotating, engaging band on said first side of said transport track upon said second group of filled bottles exiting said transport system;

(R) disengaging said first end of said second bar from said sole rotating, engaging band on said first side of said transport track;

(S) returning said second bar to said bar collecting area; and

(T) continuing steps G to K and P to S with a third bar and subsequent bars.

2. Means for performing the method of transporting groups of filled beverage bottles to a beverage bottle packaging machine, such as a beverage bottle shrink wrapping machine or a beverage bottle cartoning machine, in a beverage bottling plant according to claim **1**, said means comprising:

means for feeding a first group of filled bottles into a transport system on a transport track;

means for rotating a sole one of an at least one rotating band being disposed on a first side of said transport track;

means for removing a first bar from a plurality of bars in a bar collecting area, said plurality of bars in said bar collecting area not being in contact with said sole rotating band;

said first bar being:

positionally adjustable; and

configured to be engaged at a plurality of positions on said sole rotating band;

said sole rotating band being configured to engage said plurality of bars removed from said bar collecting area, one bar after another bar, in order to permit a plurality of bars to be engaged substantially simultaneously with said sole rotating, engaging band on said first side of said transport track;

means for engaging a first end of said first bar on said sole rotating, engaging band on said first side of said transport track in one of a plurality of positions on said sole rotating, engaging band on said first side of said transport track;

means for moving said first bar with said sole rotating, engaging band on said first side of said transport track along at least a portion of said transport track;

means for affecting the movement of a first group of filled bottles on said transport track with said first bar;

said means for feeding comprising means for feeding a second group of filled bottles into said transport system on said transport track;

said means for removing comprising means for removing a second bar from said plurality of bars in said bar collecting area, said second bar being:

positionally adjustable; and

configured to be engaged at a plurality of positions on said sole rotating, engaging band on said first side of said transport track;

said means for engaging comprising means for engaging a first end of said second bar on said sole rotating, engag-

ing band on said first side of said transport track in one of said plurality of positions on said sole rotating, engaging band on said first side of said transport track, upon a predetermined gap of space being created between a first group of filled bottles and a second group of filled bottles in order to transport groups of filled bottles into said beverage bottle packaging machine at a predetermined rate configured to minimize delays in said beverage bottle packaging machine;

said means for moving comprising means for moving said second bar with said sole rotating, engaging band on said first side of said transport track along said at least a portion of said transport track;

said means for affecting comprising means for affecting the movement of a second group of filled bottles on said transport track with said second bar and maintaining a predetermined gap of space between a first group of filled bottles and a second group of filled bottles;

means for transporting a first group of filled bottles to said beverage bottle packaging machine;

means for moving said first bar away from said transport track with said sole rotating, engaging band on said first side of said transport track upon a first group of bottles exiting said transport system;

means for disengaging said first end of said first bar from said sole rotating, engaging band on said first side of said transport track;

means for returning said first bar to said bar collecting area;

said means for transporting comprising means for transporting a second group of filled bottles to said beverage bottle packaging machine;

said means for moving comprising means for moving said second bar away from said transport track with said sole rotating, engaging band on said first side of said transport track upon a second group of bottles exiting said transport system;

said means for disengaging comprising means for disengaging said first end of said second bar from said sole rotating, engaging band on said first side of said transport track;

said means for returning comprising means for returning said second bar to said bar collecting area; and

means for continuing the method with a third bar and subsequent bars.

3. A beverage bottle transportation arrangement for performing the method of claim **1** in a beverage bottling plant;

said beverage bottle transportation arrangement comprising:

a feeding arrangement being configured to feed a first group of filled bottles into a transport system on a transport track;

a rotating arrangement being configured to rotate a sole one of an at least one rotating band being disposed on a first side of said transport track;

a removing arrangement being configured to remove a first bar from a plurality of bars in a bar collecting area, said plurality of bars in said bar collecting area not being in contact with said sole rotating band;

said first bar being:

positionally adjustable; and

configured to be engaged at a plurality of positions on said sole rotating band;

said sole rotating band being configured to engage said plurality of bars removed from said bar collecting area, one bar after another bar, in order to permit a plurality of bars to be engaged substantially simultaneously with said sole rotating, engaging band on said first side of said transport track;

an engaging arrangement being configured to engage a first end of said first bar on said sole rotating, engaging band on said first side of said transport track in one of a plurality of positions on said sole rotating, engaging band on said first side of said transport track;

a first moving arrangement being configured to move said first bar with said sole rotating, engaging band on said first side of said transport track along at least a portion of said transport track;

an affecting arrangement being configured to affect the movement of a first group of filled bottles on said transport track with said first bar;

said feeding arrangement being configured to feed a second group of filled bottles into said transport system on said transport track;

said removing arrangement being configured to remove a second bar from said plurality of bars in said bar collecting area, said second bar being:

positionally adjustable; and

configured to be engaged at a plurality of positions on said sole rotating, engaging band on said first side of said transport track;

said engaging arrangement being configured to engage a first end of said second bar on said sole rotating, engaging band on said first side of said transport track in one of said plurality of positions on said sole rotating, engaging band on said first side of said transport track, upon a predetermined gap of space being created between a first group of filled bottles and a second group of filled bottles in order to transport groups of filled bottles into a beverage bottle packaging machine at a predetermined rate configured to minimize delays in said beverage bottle packaging machine;

said first moving arrangement being configured to move said second bar with said sole rotating, engaging band on said first side of said transport track along said at least a portion of said transport track;

said affecting arrangement being configured to affect the movement of a second group of filled bottles on said transport track with said second bar and maintaining a predetermined gap of space between a first group of filled bottles and a second group of filled bottles;

a transporting arrangement being configured to transport a first group of filled bottles to said beverage bottle packaging machine;

a second moving arrangement being configured to move said first bar away from said transport track with said sole rotating, engaging band on said first side of said transport track upon a first group of bottles exiting said transport system;

a disengaging arrangement being configured to disengage said first end of said first bar from said sole rotating, engaging band on said first side of said transport track;

a returning arrangement being configured to return said first bar to said bar collecting area;

said transporting arrangement being configured to transport a second group of filled bottles to said beverage bottle packaging machine;

said second moving arrangement being configured to move said second bar away from said transport track with said

sole rotating, engaging band on said first side of said transport track upon a second group of bottles exiting said transport system;

said disengaging arrangement being configured to disengage said first end of said second bar from said sole rotating, engaging band on said first side of said transport track;

said returning arrangement being configured to return said second bar to said bar collecting area; and

a continuing arrangement being configured to continue the method with a third bar and subsequent bars.

4. The method of transporting groups of filled beverage bottles to a beverage bottle packaging machine in a beverage bottling plant according to claim **1**, wherein:

said sole rotating, engaging band on said first side of said transport track comprises a plurality of grooves, which plurality of grooves are spaced apart at predetermined intervals;

each of said plurality of grooves is configured to accept a corresponding one of said plurality of bars and is further configured to drive said corresponding one of said plurality of bars along the length of said sole rotating, engaging band upon one of said plurality of bars being accepted into a corresponding one of said plurality of grooves;

one of (a) and (b):

(a) said step of affecting the movement of said first group of filled beverage bottles on said transport track with said first bar further comprises pushing said first group of filled beverage bottles on said transport track with said first bar;

said step of affecting the movement of said second group of filled beverage bottles on said transport track with said second bar further comprises pushing said second group of filled beverage bottles on said transport track with said second bar; and

(b) said step of affecting the movement of said first group of filled beverage bottles on said transport track with said first bar further comprises restricting the movement of said first group of filled beverage bottles on said transport track with said first bar; and

said step of affecting the movement of said second group of filled beverage bottles on said transport track with said second bar further comprises restricting the movement of said second group of filled beverage bottles on said transport track with said second bar.

5. The method of transporting groups of filled beverage bottles to a beverage bottle packaging machine in a beverage bottling plant according to claim **1**, wherein:

each of said plurality of bars comprises a clip disposed on a first end of a corresponding one of said plurality of bars;

said clip is configured to clip onto said sole rotating, engaging band at any of said substantially continuous number of positions and is further configured to be driven by said sole rotating, engaging band upon said clip clipping onto said sole rotating, engaging band at any of said substantially continuous number of positions;

one of (a) and (b):

(a) said step of affecting the movement of said first group of filled beverage bottles on said transport track with said first bar further comprises pushing said first group of filled beverage bottles on said transport track with said first bar;

said step of affecting the movement of said second group of filled beverage bottles on said transport track with said second bar further comprises pushing said second group of filled beverage bottles on said transport track with said second bar; and

(b) said step of affecting the movement of said first group of filled beverage bottles on said transport track with said first bar further comprises restricting the movement of said first group of filled beverage bottles on said transport track with said first bar; and

said step of affecting the movement of said second group of filled beverage bottles on said transport track with said second bar further comprises restricting the movement of said second group of filled beverage bottles on said transport track with said second bar.

6. The method of transporting groups of filled beverage bottles to a beverage bottle packaging machine in a beverage bottling plant according to claim **1** including a second sole rotating, engaging band, wherein:

said method further comprises mechanically connecting, at least temporarily, said plurality of bars in one of said substantially continuous number of positions on said sole rotating, engaging band;

said transport system further comprises:

an inlet; and

an outlet;

said step of moving said first bar with said sole rotating, engaging band on said first side of said transport track along at least a portion of said transport track further comprises moving said first bar from said inlet to said outlet of said transport system in a direction of transport; and

said step of moving said second bar with said sole rotating, engaging band on said first side of said transport track along at least a portion of said transport track further comprises moving said second bar from said inlet to said outlet in said direction of transport;

one of (c) and (d):

(c) said substantially continuous number of positions on said rotating, engaging band are each disposed at a predetermined interval away from one another along the length of said sole rotating, engaging band; and

said method further comprises adjusting the spacing between each of said plurality of bars by engaging said first end of said second bar at a predetermined interval away from said first bar along the length of said sole rotating, engaging band; and

(d) said plurality of bars are configured to be engaged at any one of said substantially continuous number of positions on said sole rotating, engaging band; and

said method further comprises adjusting the spacing between each of said plurality of bars by engaging said first end of said second bar at any one of said substantially continuous number of positions along the length of said sole rotating, engaging band at any distance away from said first bar;

said step of adjusting the spacing between each of said plurality of bars further comprises adjusting the spacing between each of said plurality of bars manually; and

said bar collecting area is disposed along a portion of the length of said sole rotating, engaging band rotationally downstream of said outlet;

said step of disengaging said first end of said first bar from said sole rotating, engaging band further comprises dis-

engaging said first end of said first bar from said sole rotating, engaging band along said portion of the length of said sole rotating, engaging band rotationally downstream of said outlet;

said step of disengaging said first end of said second bar from said sole rotating, engaging band further comprises disengaging said first end of said second bar from said sole rotating, engaging band along said portion of the length of said sole rotating, engaging band rotationally downstream of said outlet;

said step of engaging a first end of said first bar further comprises engaging said first end of said first bar on said sole rotating, engaging band on said first side of said transport track in one of said substantially continuous number of positions on said sole rotating, engaging band on said first side of said transport track at a portion of said sole rotating, engaging band adjacent said inlet of said transport system;

said step of engaging a first end of said second bar further comprises engaging said first end of said second bar on said sole rotating, engaging band on said first side of said transport track in one of said substantially continuous number of positions on said sole rotating, engaging band on said first side of said transport track at a portion of said sole rotating, engaging band adjacent said inlet of said transport system;

said bar collecting area further comprises a bar collecting area inlet;

said method further comprises:

rotating a first transfer wheel disposed adjacent said bar collecting area inlet on said first side of said transport track;

transferring, with said first transfer wheel, said first bar from said bar collecting area to a position adjacent said sole rotating, engaging band; and

transferring, with said first transfer wheel, said second bar from said bar collecting area to a position adjacent said sole rotating, engaging band;

said sole rotating, engaging band comprises a closed, endless loop on which said plurality of bars are configured to engage;

said second sole rotating, engaging band comprises a closed, endless loop on which said plurality of bars are configured to engage;

said sole rotating, engaging band is configured to rotate in a first plane substantially perpendicular to said transport track;

said second sole rotating, engaging band is configured to rotate in a second plane substantially perpendicular to said transport track;

said first plane and said second plane are substantially parallel with respect to one another;

said first plane and said second plane are substantially parallel to said direction of transport;

said step of transferring, with said first transfer wheel, said first bar further comprises transferring, with said first transfer wheel, said first bar from said bar collecting area to a position adjacent said sole rotating, engaging band and said second sole rotating, engaging band above said inlet of said transport system;

said step of transferring, with said first transfer wheel, said second elongated further comprises transferring, with said first transfer wheel, said second bar from said bar collecting area to a position adjacent said sole rotating, engaging band and said second sole rotating, engaging band above said inlet of said transport system;

said step of moving said first bar away from said transport track further comprises moving said first bar away from said transport track with said sole rotating, engaging band on said first side of said transport track and with said second sole rotating, engaging band on said second side of said transport track at a position adjacent said outlet of said transport track;

said step of moving said second bar away from said transport track further comprises moving said second bar away from said transport track with said sole rotating, engaging band on said first side of said transport track and with said second sole rotating, engaging band on said second side of said transport track at a position adjacent said outlet of said transport track;

said sole rotating, engaging band comprises a first portion being disposed between said inlet and said outlet of said transport system and being further disposed adjacent said transport track;

said sole rotating, engaging band further comprises a second portion being disposed opposite said first portion of said sole rotating, engaging band;

said bar collecting area is disposed adjacent said second portion of said sole rotating, engaging band and adjacent said inlet of said transport system;

one of (e) and (f):

(e) said transport track comprises a sliding or rolling surface; and

(f) said transport track comprises at least one driven transport element;

one of (g) and (h):

(g) said step of transferring, with said first transfer wheel, said first bar further comprises automatically transferring, with said first transfer wheel, said first bar from said bar collecting area to a position adjacent said sole rotating, engaging band and said second sole rotating, engaging band above said inlet of said transport system; and

said step of transferring, with said first transfer wheel, said second elongated further comprises automatically transferring, with said first transfer wheel, said second bar from said bar collecting area to a position adjacent said sole rotating, engaging band and said second sole rotating, engaging band above said inlet of said transport system; and

(h) said step of transferring, with said first transfer wheel, said first bar further comprises manually transferring, with said first transfer wheel, said first bar from said bar collecting area to a position adjacent said sole rotating, engaging band and said second sole rotating, engaging band above said inlet of said transport system; and

said step of transferring, with said first transfer wheel, said second elongated further comprises manually transferring, with said first transfer wheel, said second bar from said bar collecting area to a position adjacent said sole rotating, engaging band and said second sole rotating, engaging band above said inlet of said transport system; and

said plurality of bars are permanently connected to said transport system.

7. A method of transporting groups of containers to a container handling machine in a container processing plant, said method comprising the steps of:

(A) feeding a first group of containers into a transport system on a transport track;

(B) rotating a first one of an at least one rotating band being disposed on a first side of said transport track;

(C) removing a first elongated element from a plurality of elongated elements in an elongated element collecting area, said plurality of elongated elements in said elongated element collecting area being not being in contact with said first rotating band;

said first elongated element being:

positionally adjustable; and

configured to be engaged at a substantially continuous number of positions on said first rotating band;

said first rotating band being configured to engage said plurality of elongated elements removed from said elongated element collecting area, one elongated element after another elongated element, in order to permit a plurality of elongated elements to be engaged on said first side of said transport track substantially simultaneously solely with said first rotating, engaging band on said first side of said transport track;

(D) engaging a first end of said first elongated element on said first rotating, engaging band on said first side of said transport track in one of said substantially continuous number of positions on said first rotating, engaging band on said first side of said transport track;

(E) moving said first elongated element with said first rotating, engaging band on said first side of said transport track along at least a portion of said transport track;

(F) affecting the movement of said first group of containers on said transport track with said first elongated element;

(G) feeding a second group of containers into said transport system on said transport track;

(H) removing a second elongated element from said plurality of elongated elements in said elongated element collecting area, said second elongated element being:

positionally adjustable; and

configured to be engaged at a substantially continuous number of positions on said first rotating, engaging band on said first side of said transport track;

(I) engaging a first end of said second elongated element on said first rotating, engaging band on said first side of said transport track in one of said substantially continuous number of positions on said first rotating, engaging band on said first side of said transport track, upon a predetermined gap of space being created between said first group of containers and said second group of containers in order to transport groups of containers to said container handling machine at a predetermined rate configured to minimize delays in said container handling machine;

(J) moving said second elongated element with said first rotating, engaging band on said first side of said transport track along said at least a portion of said transport track;

(K) affecting the movement of said second group of containers on said transport track with said second elongated element and maintaining said predetermined gap of space between said first group of containers and said second group of containers;

(L) transporting said first group of containers to said container handling machine;

(M) moving said first elongated element away from said transport track with said first rotating, engaging band on said first side of said transport track upon said first group of containers exiting said transport system;

(N) disengaging said first end of said first elongated element from said first rotating, engaging band on said first side of said transport track;

(O) returning said first elongated element to said elongated element collecting area;

(P) transporting said second group of containers to said container handling machine;

(Q) moving said second elongated element away from said transport track with said first rotating, engaging band on said first side of said transport track upon said second group of containers exiting said transport system;

(R) disengaging said first end of said second elongated element from said first rotating, engaging band on said first side of said transport track;

(S) returning said second elongated element to said elongated element collecting area; and

(T) continuing steps F to K and P to S with a third elongated element and subsequent elongated elements.

8. Means for performing the method of transporting groups of containers to a container handling machine in a container processing plant according to claim 7, said means comprising:

means for feeding a first group of containers into a transport system on a transport track;

means for rotating a first one of an at least one rotating band being disposed on a first side of said transport track;

means for removing a first elongated element from a plurality of elongated elements in an elongated element collecting area, said plurality of elongated elements in said elongated element collecting area being not being in contact with said first rotating band;

said first elongated element being:

positionally adjustable; and

configured to be engaged at a substantially continuous number of positions on said first rotating band;

said first rotating band being configured to engage said plurality of elongated elements removed from said elongated element collecting area, one elongated element after another elongated element, in order to permit a plurality of elongated elements to be engaged on said first side of said transport track substantially simultaneously solely with said first rotating, engaging band on said first side of said transport track;

means for engaging a first end of said first elongated element on said first rotating, engaging band on said first side of said transport track in one of said substantially continuous number of positions on said first rotating, engaging band on said first side of said transport track;

means for moving said first elongated element with said first rotating, engaging band on said first side of said transport track along at least a portion of said transport track;

means for affecting the movement of a first group of containers on said transport track with said first elongated element;

said means for feeding comprising means for feeding a second group of containers into said transport system on said transport track;

said means for removing comprising means for removing a second elongated element from said plurality of elongated elements in said elongated element collecting area, said second elongated element being:

positionally adjustable; and

configured to be engaged at a substantially continuous number of positions on said first rotating, engaging band on said first side of said transport track;

said means for engaging comprising means for engaging a first end of said second elongated element on said first rotating, engaging band on said first side of said transport track in one of said substantially continuous number of positions on said first rotating, engaging band on said first side of said transport track, upon a predetermined gap of space being created between a first group of containers and a second group of containers in order to transport groups of containers to said container handling machine at a predetermined rate configured to minimize delays in said container handling machine;

said means for moving comprising means for moving said second elongated element with said first rotating, engaging band on said first side of said transport track along said at least a portion of said transport track;

said means for affecting comprising means for affecting the movement of a second group of containers on said transport track with said second elongated element and maintaining a predetermined gap of space between a first group of containers and a second group of containers;

means for transporting a first group of containers to said container handling machine;

means for moving said first elongated element away from said transport track with said first rotating, engaging band on said first side of said transport track upon a first group of containers exiting said transport system;

means for disengaging said first end of said first elongated element from said first rotating, engaging band on said first side of said transport track;

means for returning said first elongated element to said elongated element collecting area;

said means for transporting comprising means for transporting a second group of containers to said container handling machine;

said means for moving comprising means for moving said second elongated element away from said transport track with said first rotating, engaging band on said first side of said transport track upon a second group of containers exiting said transport system;

said means for disengaging comprising means for disengaging said first end of said second elongated element from said first rotating, engaging band on said first side of said transport track;

said means for returning comprising means for returning said second elongated element to said elongated element collecting area; and

means for continuing the method with a third elongated element and subsequent elongated elements.

9. A container transportation arrangement for performing the method of claim **7** in a container processing plant, said container transportation arrangement comprising:

a feeding arrangement being configured to feed a first group of containers into a transport system on a transport track;

a rotating arrangement being configured to rotate a first one of an at least one rotating band being disposed on a first side of said transport track;

a removing arrangement being configured to remove a first elongated element from a plurality of elongated elements in an elongated element collecting area, said plurality of elongated elements in said elongated element collecting area being not being in contact with said first rotating band;

said first elongated element being:

positionally adjustable; and

configured to be engaged at a substantially continuous number of positions on said first rotating band;

said first rotating band being configured to engage said plurality of elongated elements removed from said elongated element collecting area, one elongated element after another elongated element, in order to permit a plurality of elongated elements to be engaged on said first side of said transport track substantially simultaneously solely with said first rotating, engaging band on said first side of said transport track at one time;

an engaging arrangement being configure to engage a first end of said first elongated element on said first rotating, engaging band on said first side of said transport track in one of said substantially continuous number of positions on said first rotating, engaging band on said first side of said transport track;

a first moving arrangement being configured to move said first elongated element with said first rotating, engaging band on said first side of said transport track along at least a portion of said transport track;

an affecting arrangement being configured to affect the movement of a first group of containers on said transport track with said first elongated element;

said feeding arrangement being configured to feed a second group of containers into said transport system on said transport track;

said removing arrangement being configured to remove a second elongated element from said plurality of elongated elements in said elongated element collecting area, said second elongated element being:

positionally adjustable; and

configured to be engaged at a substantially continuous number of positions on said first rotating, engaging band on said first side of said transport track;

said engaging arrangement being configured to engage a first end of said second elongated element on said first rotating, engaging band on said first side of said transport track in one of said substantially continuous number of positions on said first rotating, engaging band on said first side of said transport track, upon a predetermined gap of space being created between a first group of containers and a second group of containers in order to transport groups of containers to said container handling machine at a predetermined rate configured to minimize delays in said container handling machine;

said first moving arrangement being configured to move said second elongated element with said first rotating, engaging band on said first side of said transport track along said at least a portion of said transport track;

said affecting arrangement being configured to affect the movement of a second group of containers on said transport track with said second elongated element and main-

taining a predetermined gap of space between a first group of containers and a second group of containers;

a transporting arrangement being configured to transport a first group of containers to said container handling machine;

a second moving arrangement being configured to move said first elongated element away from said transport track with said first rotating, engaging band on said first side of said transport track upon a first group of containers exiting said transport system;

a disengaging arrangement being configured to disengage said first end of said first elongated element from said first rotating, engaging band on said first side of said transport track;

a returning arrangement being configured to return said first elongated element to said elongated element collecting area;

said transporting arrangement being configured to transport a second group of containers to said container handling machine;

said second moving arrangement being configured to move said second elongated element away from said transport track with said first rotating, engaging band on said first side of said transport track upon a second group of containers exiting said transport system;

said disengaging arrangement being configured to disengage said first end of said second elongated element from said first rotating, engaging band on said first side of said transport track;

said returning arrangement being configured to return said second elongated element to said elongated element collecting area; and

a continuing arrangement being configured to continue the method with a third elongated element and subsequent elongated elements.

10. The method of transporting groups of containers to a container handling machine in a container processing plant according to claim **7**, wherein:

said first rotating, engaging band on said first side of said transport track comprises a plurality of grooves, which plurality of grooves are spaced apart at predetermined intervals; and

each of said plurality of grooves is configured to accept a corresponding one of said plurality of elongated elements and is further configured to drive said corresponding one of said plurality of elongated elements along the length of said first rotating, engaging band upon one of said plurality of elongated elements being accepted into a corresponding one of said plurality of grooves.

11. The method of transporting groups of containers to a container handling machine in a container processing plant according to claim **10**, wherein one of (a) and (b):

(a) said step of affecting the movement of said first group of containers on said transport track with said first elongated element further comprises pushing said first group of containers on said transport track with said first elongated element;

said step of affecting the movement of said second group of containers on said transport track with said second elongated element further comprises pushing said second group of containers on said transport track with said second elongated element; and

(b) said step of affecting the movement of said first group of containers on said transport track with said first elongated element further comprises restricting the movement of said first group of containers on said transport track with said first elongated element; and

said step of affecting the movement of said second group of containers on said transport track with said second elongated element further comprises restricting the movement of said second group of containers on said transport track with said second elongated element.

12. The method of transporting groups of containers to a container handling machine in a container processing plant according to claim **7**, wherein:

each of said plurality of elongated elements comprises a clip disposed on a first end of a corresponding one of said plurality of elongated elements;

said clip is configured to clip onto said first rotating, engaging band at any of said substantially continuous number of positions and is further configured to be driven by said first rotating, engaging band upon said clip clipping onto said first rotating, engaging band at any of said substantially continuous number of positions.

13. The method of transporting groups of containers to a container handling machine in a container processing plant according to claim **12**, wherein one of (a) and (b):

(a) said step of affecting the movement of said first group of containers on said transport track with said first elongated element further comprises pushing said first group of containers on said transport track with said first elongated element;

said step of affecting the movement of said second group of containers on said transport track with said second elongated element further comprises pushing said second group of containers on said transport track with said second elongated element; and

(b) said step of affecting the movement of said first group of containers on said transport track with said first elongated element further comprises restricting the movement of said first group of containers on said transport track with said first elongated element; and

said step of affecting the movement of said second group of containers on said transport track with said second elongated element further comprises restricting the movement of said second group of containers on said transport track with said second elongated element.

14. The method of transporting groups of containers to a container handling machine in a container processing plant according to claim **7**, wherein:

said method further comprises mechanically connecting, at least temporarily, said plurality of elongated elements in one of said substantially continuous number of positions on said first rotating, engaging band;

said transport system further comprises:

an inlet; and

an outlet;

said step of moving said first elongated element with said first rotating, engaging band on said first side of said transport track along at least a portion of said transport track further comprises moving said first elongated element from said inlet to said outlet of said transport system in a direction of transport; and

said step of moving said second elongated element with said first rotating, engaging band on said first side of said transport track along at least a portion of said transport

track further comprises moving said second elongated element from said inlet to said outlet in said direction of transport.

15. The method of transporting groups of containers to a container handling machine in a container processing plant according to claim **24**, wherein:

one of (c) and (d):

(c) said substantially continuous number of positions on said rotating, engaging band are each disposed at a predetermined interval away from one another along the length of said first rotating, engaging band; and

said method further comprises adjusting the spacing between each of said plurality of elongated elements by engaging said first end of said second elongated element at a predetermined interval away from said first elongated element along the length of said first rotating, engaging band; and

(d) said plurality of elongated elements are configured to be engaged at any one of said substantially continuous number of positions on said first rotating, engaging band; and

said method further comprises adjusting the spacing between each of said plurality of elongated elements by engaging said first end of said second elongated element at any one of said substantially continuous number of positions along the length of said first rotating, engaging band at any distance away from said first elongated element;

said step of adjusting the spacing between each of said plurality of elongated elements further comprises adjusting the spacing between each of said plurality of elongated elements manually; and

said elongated element collecting area is disposed along a portion of the length of said first rotating, engaging band rotationally downstream of said outlet.

16. The method of transporting groups of containers to a container handling machine in a container processing plant according to claim **15** including a second rotating, engaging band, wherein:

said step of disengaging said first end of said first elongated element from said first rotating, engaging band further comprises disengaging said first end of said first elongated element from said first rotating, engaging band along said portion of the length of said first rotating, engaging band rotationally downstream of said outlet;

said step of disengaging said first end of said second elongated element from said first rotating, engaging band further comprises disengaging said first end of said second elongated element from said first rotating, engaging band along said portion of the length of said first rotating, engaging band rotationally downstream of said outlet;

said step of engaging a first end of said first elongated element further comprises engaging said first end of said first elongated element on said first rotating, engaging band on said first side of said transport track in one of said substantially continuous number of positions on said first rotating, engaging band on said first side of said transport track at a portion of said first rotating, engaging band adjacent said inlet of said transport system;

said step of engaging a first end of said second elongated element further comprises engaging said first end of said second elongated element on said first rotating, engaging band on said first side of said transport track in one of said substantially continuous number of positions on said first rotating, engaging band on said first side of said transport track at a portion of said first rotating, engaging band adjacent said inlet of said transport system;

said elongated element collecting area further comprises an elongated element collecting area inlet;

said method further comprises:

rotating a first transfer wheel disposed adjacent said elongated element collecting area inlet on said first side of said transport track;

transferring, with said first transfer wheel, said first elongated element from said elongated element collecting area to a position adjacent said first rotating, engaging band; and

transferring, with said first transfer wheel, said second elongated element from said elongated element collecting area to a position adjacent said first rotating, engaging band;

said first rotating, engaging band comprises a closed, endless loop on which said plurality of elongated elements are configured to engage;

said second rotating, engaging band comprises a closed, endless loop on which said plurality of elongated elements are configured to engage;

said first rotating, engaging band is configured to rotate in a first plane substantially perpendicular to said transport track;

said second rotating, engaging band is configured to rotate in a second plane substantially perpendicular to said transport track;

said first plane and said second plane are substantially parallel with respect to one another;

said first plane and said second plane are substantially parallel to said direction of transport;

said step of transferring, with said first transfer wheel, said first elongated element further comprises transferring, with said first transfer wheel, said first elongated element from said elongated element collecting area to a position adjacent said first rotating, engaging band and said second rotating, engaging band above said inlet of said transport system;

said step of transferring, with said first transfer wheel, said second elongated further comprises transferring, with said first transfer wheel, said second elongated element from said elongated element collecting area to a position adjacent said first rotating, engaging band and said second rotating, engaging band above said inlet of said transport system;

said step of moving said first elongated element away from said transport track further comprises moving said first elongated element away from said transport track with said first rotating, engaging band on said first side of said transport track and with said second rotating, engaging band on said second side of said transport track at a position adjacent said outlet of said transport track;

said step of moving said second elongated element away from said transport track further comprises moving said second elongated element away from said transport track with said first rotating, engaging band on said first side of said transport track and with said second rotating, engaging band on said second side of said transport track at a position adjacent said outlet of said transport track;

said first rotating, engaging band comprises a first portion being disposed between said inlet and said outlet of said transport system and being further disposed adjacent said transport track;

said first rotating, engaging band further comprises a second portion being disposed opposite said first portion of said first rotating, engaging band;

said elongated element collecting area is disposed adjacent said second portion of said first rotating, engaging band and adjacent said inlet of said transport system;

one of (e) and (f):

(e) said transport track comprises a sliding or rolling surface; and

(f) said transport track comprises at least one driven transport element;

one of (g) and (h):

(g) said step of transferring, with said first transfer wheel, said first elongated element further comprises automatically transferring, with said first transfer wheel, said first elongated element from said elongated element collecting area to a position adjacent said first rotating, engaging band and said second rotating, engaging band above said inlet of said transport system; and

said step of transferring, with said first transfer wheel, said second elongated further comprises automatically transferring, with said first transfer wheel, said second elongated element from said elongated element collecting area to a position adjacent said first rotating, engaging band and said second rotating, engaging band above said inlet of said transport system; and

(h) said step of transferring, with said first transfer wheel, said first elongated element further comprises manually transferring, with said first transfer wheel, said first elongated element from said elongated element collecting area to a position adjacent said first rotating, engaging band and said second rotating, engaging band above said inlet of said transport system; and

said step of transferring, with said first transfer wheel, said second elongated further comprises manually transferring, with said first transfer wheel, said second elongated element from said elongated element collecting area to a position adjacent said first rotating, engaging band and said second rotating, engaging band above said inlet of said transport system; and

said plurality of elongated elements are permanently connected to said transport system.

17. A container transportation arrangement for transporting containers in a container processing plant, said container transportation arrangement comprising:

a feeding arrangement being configured to feed a first group of containers into a transport system on a transport track;

a rotating arrangement being configured to rotate a first one of an at least one rotating band being disposed on a first side of said transport track;

a removing arrangement being configured to remove a first elongated element from a plurality of elongated elements in an elongated element collecting area, said plurality of elongated elements in said elongated element collecting area being not being in contact with said first rotating band;

said first elongated element being:

positionally adjustable; and

configured to be engaged at a substantially continuous number of positions on said first rotating band;

said first rotating band being configured to engage said plurality of elongated elements removed from said elongated element collecting area, one elongated element after another elongated element, in order to permit a plurality of elongated elements to be engaged on said first side of said transport track substantially simultaneously solely with said first rotating, engaging band on said first side of said transport track at one time;

an engaging arrangement being configure to engage a first end of said first elongated element on said first rotating, engaging band on said first side of said transport track in one of said substantially continuous number of positions on said first rotating, engaging band on said first side of said transport track;

a first moving arrangement being configured to move said first elongated element with said first rotating, engaging band on said first side of said transport track along at least a portion of said transport track;

an affecting arrangement being configured to affect the movement of a first group of containers on said transport track with said first elongated element;

said feeding arrangement being configured to feed a second group of containers into said transport system on said transport track;

said removing arrangement being configured to remove a second elongated element from said plurality of elongated elements in said elongated element collecting area, said second elongated element being:

positionally adjustable; and

configured to be engaged at a substantially continuous number of positions on said first rotating, engaging band on said first side of said transport track;

said engaging arrangement being configured to engage a first end of said second elongated element on said first rotating, engaging band on said first side of said transport track in one of said substantially continuous number of positions on said first rotating, engaging band on said first side of said transport track, upon a predetermined gap of space being created between a first group of containers and a second group of containers in order to transport groups of containers to said container handling machine at a predetermined rate configured to minimize delays in said container handling machine;

said first moving arrangement being configured to move said second elongated element with said first rotating, engaging band on said first side of said transport track along said at least a portion of said transport track;

said affecting arrangement being configured to affect the movement of a second group of containers on said transport track with said second elongated element and maintaining a predetermined gap of space between a first group of containers and a second group of containers;

a transporting arrangement being configured to transport a first group of containers to said container handling machine;

a second moving arrangement being configured to move said first elongated element away from said transport track with said first rotating, engaging band on said first side of said transport track upon a first group of containers exiting said transport system;

a disengaging arrangement being configured to disengage said first end of said first elongated element from said first rotating, engaging band on said first side of said transport track;

a returning arrangement being configured to return said first elongated element to said elongated element collecting area;

said transporting arrangement being configured to transport a second group of containers to said container handling machine;

said second moving arrangement being configured to move said second elongated element away from said transport track with said first rotating, engaging band on said first side of said transport track upon a second group of containers exiting said transport system;

said disengaging arrangement being configured to disengage said first end of said second elongated element from said first rotating, engaging band on said first side of said transport track;

said returning arrangement being configured to return said second elongated element to said elongated element collecting area; and

a continuing arrangement being configured to continue transporting containers with a third elongated element and subsequent elongated elements.

18. The container transportation arrangement for transporting containers in a container processing plant according to claim **17**, wherein:

said first rotating, engaging band on said first side of said transport track comprises a plurality of grooves, which plurality of grooves are spaced apart at predetermined intervals;

each of said plurality of grooves is configured to accept a corresponding one of said plurality of elongated elements and is further configured to drive said corresponding one of said plurality of elongated elements along the length of said first rotating, engaging band upon one of said plurality of elongated elements being accepted into a corresponding one of said plurality of grooves; and

one of (a) and (b):

(a) said first elongated element further is configured to push a first group of containers on said transport track;

said second elongated element is configured to push a second group of containers on said transport track; and

(b) said first elongated element is configured to restrict the movement of a first group of containers on said transport track; and

said second elongated element is configured to restrict the movement of a second group of containers on said transport track.

19. The container transportation arrangement for transporting containers in a container processing plant according to claim **17**, wherein:

each of said plurality of elongated elements comprises a clip disposed on a first end of a corresponding one of said plurality of elongated elements;

said clip is configured to clip onto said first rotating, engaging band at any of said substantially continuous number of positions and is further configured to be driven by said first rotating, engaging band upon said clip clipping onto said first rotating, engaging band at any of said substantially continuous number of positions;

one of (a) and (b):

(a) said first elongated element further is configured to push a first group of containers on said transport track;

said second elongated element is configured to push a second group of containers on said transport track; and

(b) said first elongated element is configured to restrict the movement of a first group of containers on said transport track; and

said second elongated element is configured to restrict the movement of a second group of containers on said transport track.

20. The container transportation arrangement for transporting containers in a container processing plant according to claim **17** including a second rotating, engaging band, wherein:

each of said plurality of elongated elements is configured to mechanically connect, at least temporarily, in one of said substantially continuous number of positions on said first rotating, engaging band;

said transport system further comprises:

an inlet; and

an outlet;

said first elongated element is configured to move from said inlet to said outlet of said transport system in a direction of transport;

said second elongated element is configured to move from said inlet to said outlet in said direction of transport;

one of (c) and (d):

(c) said substantially continuous number of positions on said rotating, engaging band are each disposed at a predetermined interval away from one another along the length of said first rotating, engaging band; and

said first end of said second elongated element is configured to engage with said first rotating, engaging band at a predetermined interval away from said first elongated element along the length of said first rotating, engaging band and is further configured to adjust the spacing between said first elongated element and said second elongated element; and

(d) said plurality of elongated elements are configured to be engaged at any one of said substantially continuous number of positions on said first rotating, engaging band; and

said first end of said second elongated element is configured to engage with said first rotating, engaging at any one of said substantially continuous number of positions along the length of said first rotating, engaging band at any distance away from said first elongated element and is further configured to adjust the spacing between said first elongated element and said second elongated element;

spacing between each of said plurality of elongated elements is configured to be adjusted manually;

said elongated element collecting area is disposed along a portion of the length of said first rotating, engaging band rotationally downstream of said outlet;

said first elongated element is configured to be disengaged from said first rotating, engaging band along said portion of the length of said first rotating, engaging band rotationally downstream of said outlet;

said second elongated element is configured to be disengaged from said first rotating, engaging band along said portion of the length of said first rotating, engaging band rotationally downstream of said outlet;

said first end of said first elongated element is configured to be engaged on said first rotating, engaging band on said first side of said transport track in one of said substantially continuous number of positions on said first rotating, engaging band on said first side of said transport track at a portion of said first rotating, engaging band adjacent said inlet of said transport system;

said first end of said second elongated element is configured to be engaged on said first rotating, engaging band on said first side of said transport track in one of said substantially continuous number of positions on said first rotating, engaging band on said first side of said transport track at a portion of said first rotating, engaging band adjacent said inlet of said transport system;

said elongated element collecting area further comprises an elongated element collecting area inlet;

said container transportation arrangement comprises a first transfer wheel disposed adjacent said elongated element collecting area inlet on said first side of said transport track, which first transfer wheel is configured to rotate;

said first transfer wheel is configured to transfer said first elongated element from said elongated element collecting area to a position adjacent said first rotating, engaging band;

said first transfer wheel is configured to transfer said second elongated element from said elongated element collecting area to a position adjacent said first rotating, engaging band;

said first rotating, engaging band comprises a closed, endless loop on which said plurality of elongated elements are configured to engage;

said second rotating, engaging band comprises a closed, endless loop on which said plurality of elongated elements are configured to engage;

said first rotating, engaging band is configured to rotate in a first plane substantially perpendicular to said transport track;

said second rotating, engaging band is configured to rotate in a second plane substantially perpendicular to said transport track;

said first plane and said second plane are substantially parallel with respect to one another;

said first plane and said second plane are substantially parallel to said direction of transport;

said first transfer wheel is configured to transfer said first elongated element from said elongated element collecting area to a position adjacent said first rotating, engaging band and said second rotating, engaging band above said inlet of said transport system;

said first transfer wheel is configured to transfer said second elongated from said elongated element collecting area to a position adjacent said first rotating, engaging band and said second rotating, engaging band above said inlet of said transport system;

said first elongated element is configured to be moved away from said transport track with said first rotating, engaging band on said first side of said transport track and with said second rotating, engaging band on said second side of said transport track at a position adjacent said outlet of said transport track;

said second elongated element is configured to be moved away from said transport track with said first rotating, engaging band on said first side of said transport track and with said second rotating, engaging band on said second side of said transport track at a position adjacent said outlet of said transport track;

said first rotating, engaging band comprises a first portion being disposed between said inlet and said outlet of said transport system and being further disposed adjacent said transport track;

said first rotating, engaging band further comprises a second portion being disposed opposite said first portion of said first rotating, engaging band;

said elongated element collecting area is disposed adjacent said second portion of said first rotating, engaging band and adjacent said inlet of said transport system;

one of (e) and (f):

(e) said transport track comprises a sliding or rolling surface; and

(f) said transport track comprises at least one driven transport element;

one of (g) and (h):

(g) said first transfer wheel is configured to automatically transfer said first elongated element from said elongated element collecting area to a position adjacent said first rotating, engaging band and said second rotating, engaging band above said inlet of said transport system; and

said first transfer wheel is configured to automatically transfer said second elongated element from said elongated element collecting area to a position adjacent said first rotating, engaging band and said second rotating, engaging band above said inlet of said transport system; and

(h) said first transfer wheel is configured to manually transfer said first elongated element from said elongated element collecting area to a position adjacent said first rotating, engaging band and said second rotating, engaging band above said inlet of said transport system; and

said first transfer wheel is configured to manually transfer said second elongated element from said elongated element collecting area to a position adjacent said first rotating, engaging band and said second rotating, engaging band above said inlet of said transport system; and

said plurality of elongated elements are permanently connected to said transport system.

* * * * *