US 20040127963A1

(19) **United States**

(12) **Patent Application Publication** (10) **Pub. No.: US 2004/0127963 A1**

Uchida et al. (43) **Pub. Date: Jul. 1, 2004**

(54) **INTERVERTEBRAL DECOMPRESSION**

(76) Inventors: **Andy H. Uchida**, Mountain View, CA (US); **Kevin To**, Sunnyvale, CA (US)

Correspondence Address:
Joel R. Petrow, Esq.
Chief Patent Counsel
Smith & Nephew, Inc.
1450 Brooks Road
Memphis, TN 38116 (US)

(21) Appl. No.: **10/650,928**

(22) Filed: **Aug. 29, 2003**

Related U.S. Application Data

(63) Continuation-in-part of application No. 10/388,609, filed on Mar. 17, 2003, which is a continuation of application No. 09/707,627, filed on Nov. 6, 2000, now Pat. No. 6,547,810, which is a continuation of application No. 09/236,816, filed on Jan. 25, 1999, now Pat. No. 6,290,715.
Continuation-in-part of application No. 09/776,186, filed on Feb. 1, 2001.

Publication Classification

(51) **Int. Cl.**[7] **A61F 7/00**; A61F 7/12

(52) **U.S. Cl.** **607/96**; 607/113

(57) **ABSTRACT**

A method of delivering energy to an intervertebral disc includes positioning an energy delivery device adjacent an inner wall of the disc, and shrinking the nucleus pulposus. An energy delivery element of the device is positioned adjacent a bulge in the intervertebral disc. Energy delivery is controlled based on monitored temperature. A device for delivering energy includes a catheter with a distal portion configured to be inserted into a patient and to follow a natural boundary of a patient tissue, and an energy delivery element located at the distal portion for treating tissue. The distal portion includes a braided polymeric material. The catheter has a proximal portion including a tube for transmitted torque to the distal portion. The energy delivery element is a resistive heating coil having a length, e.g., of about 1.5 cm.

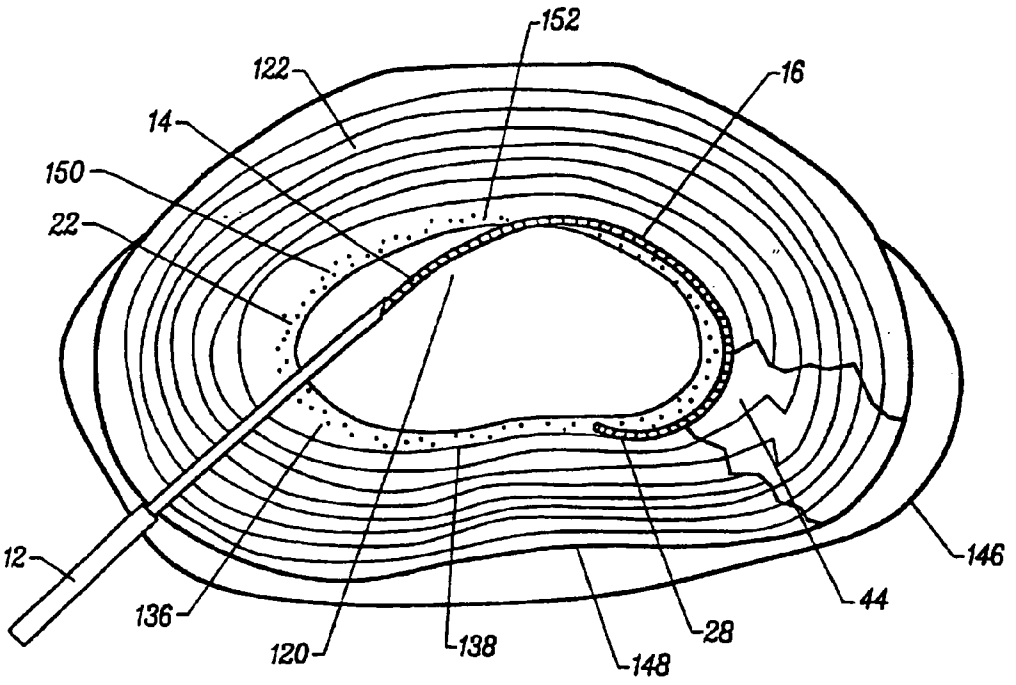

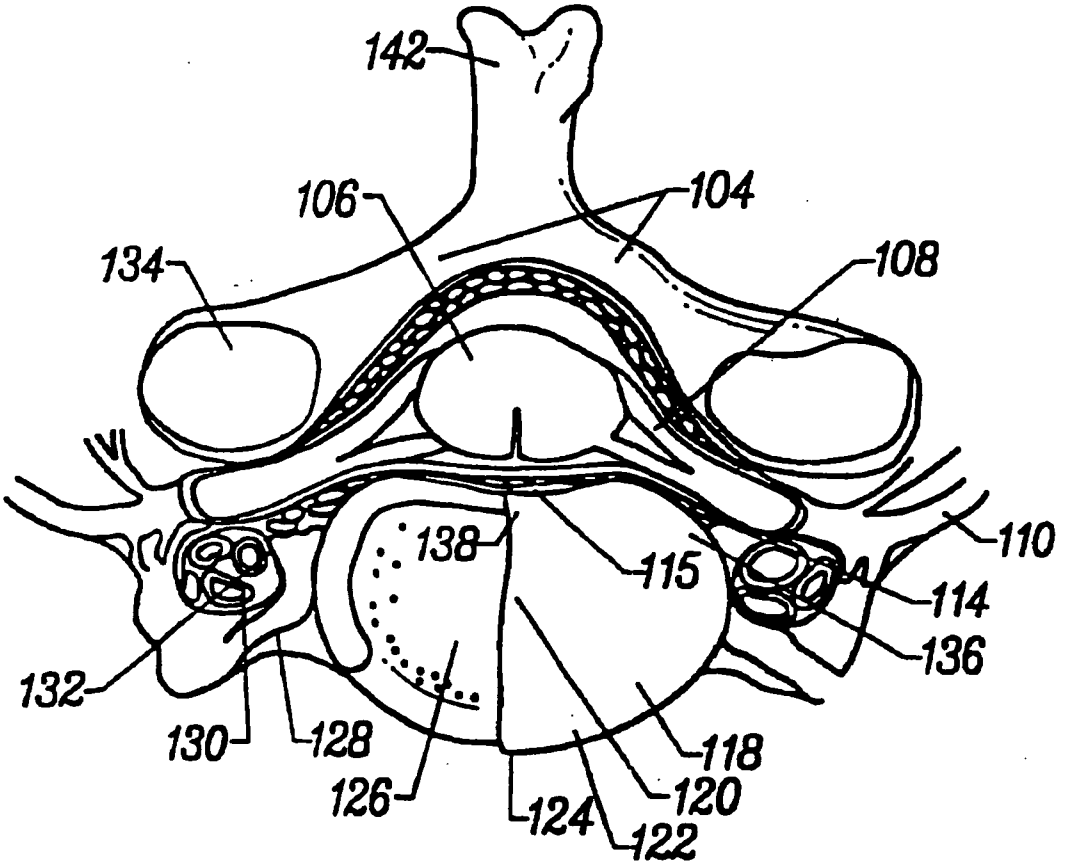
142
106
104
134
108
110
138
115
114
136
132
130
128
126
124
122
120
118

FIG. 1A

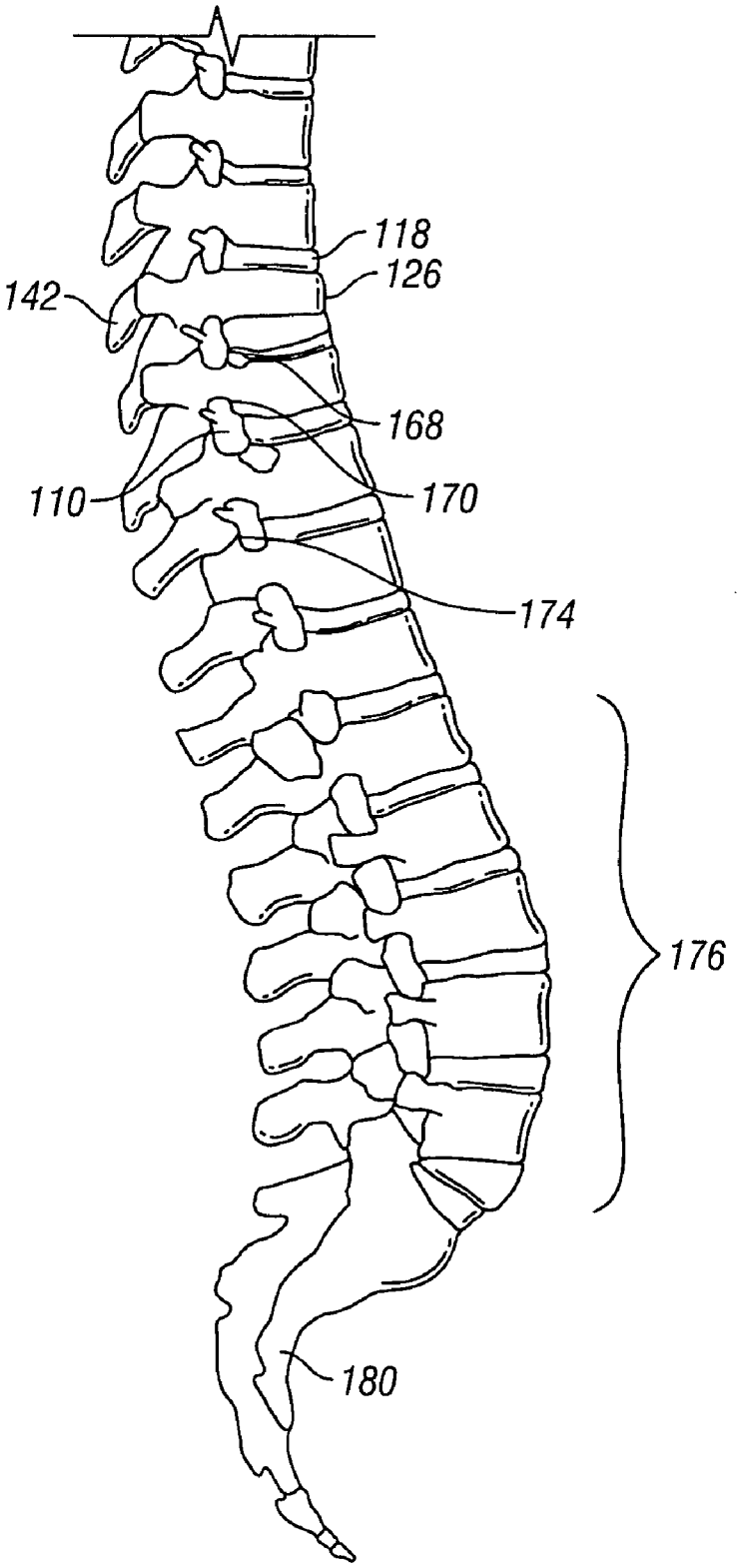

FIG. 1B

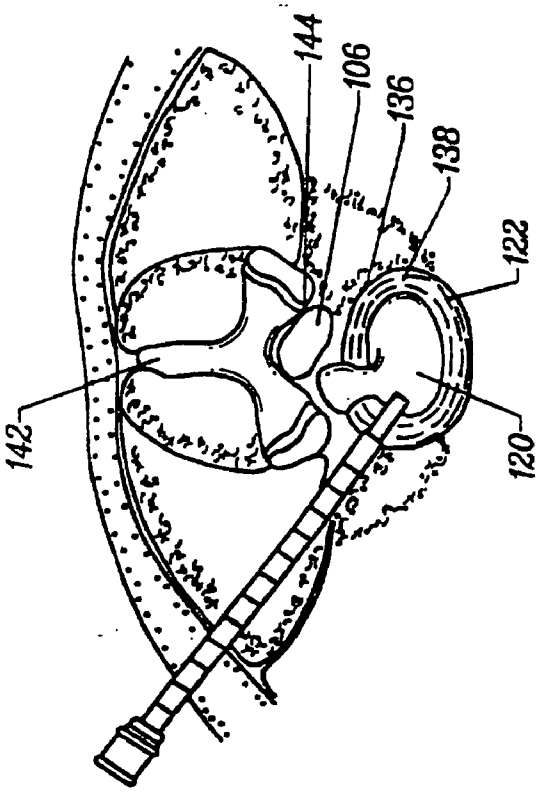

FIG. 1D

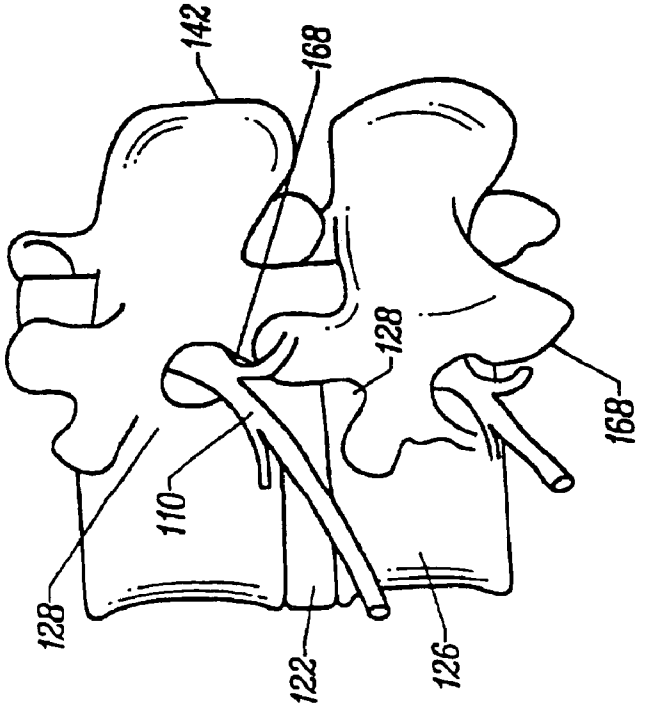

FIG. 1C

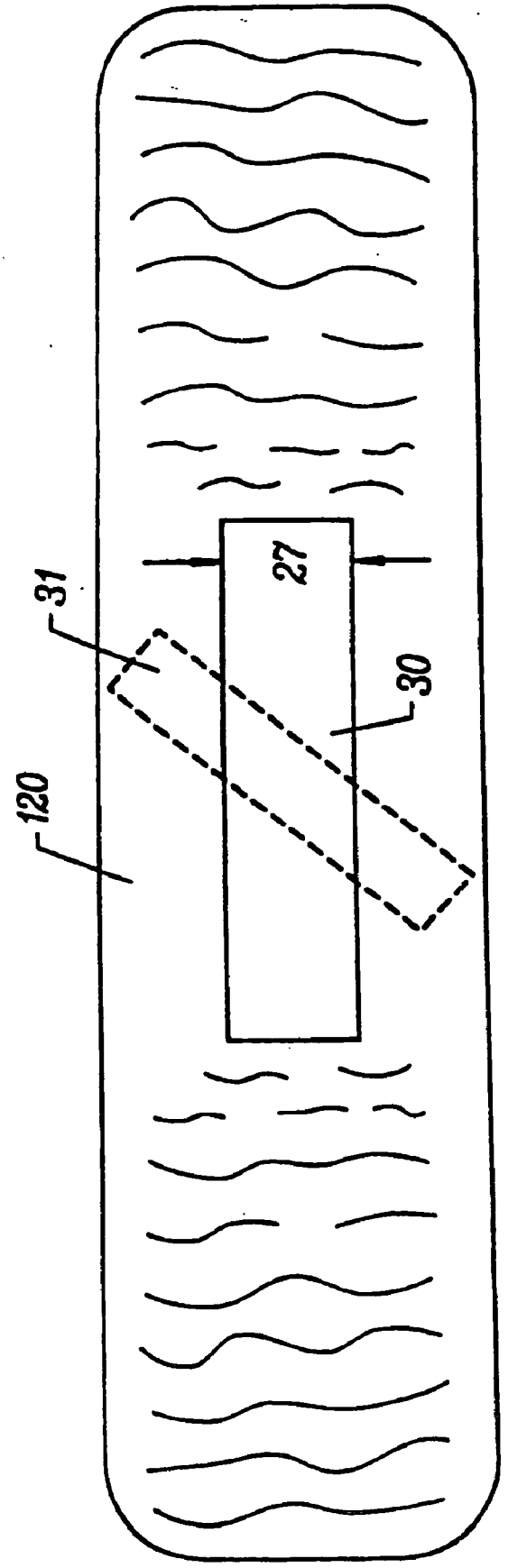

FIG. 2

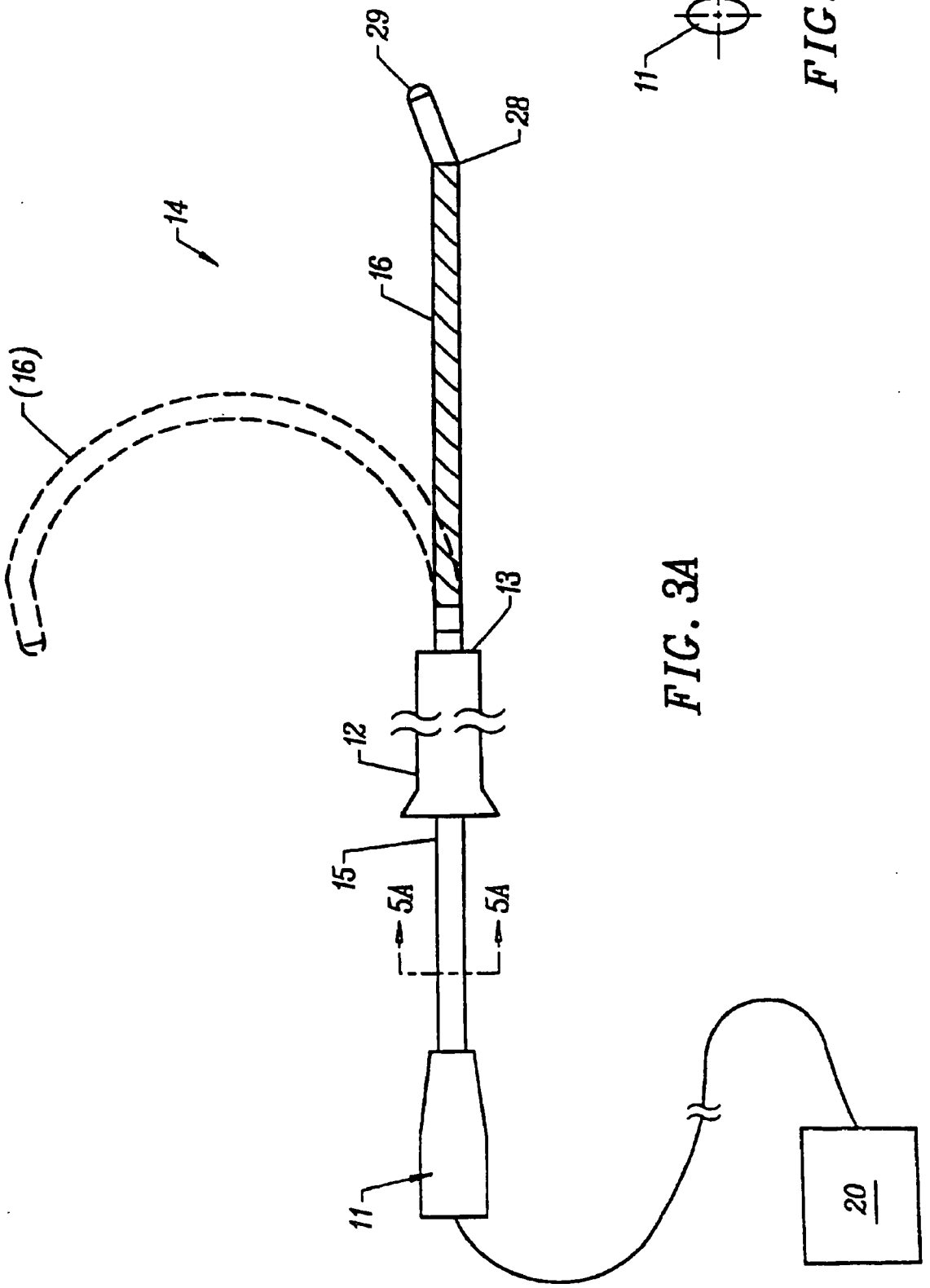

FIG. 3A

FIG. 3B

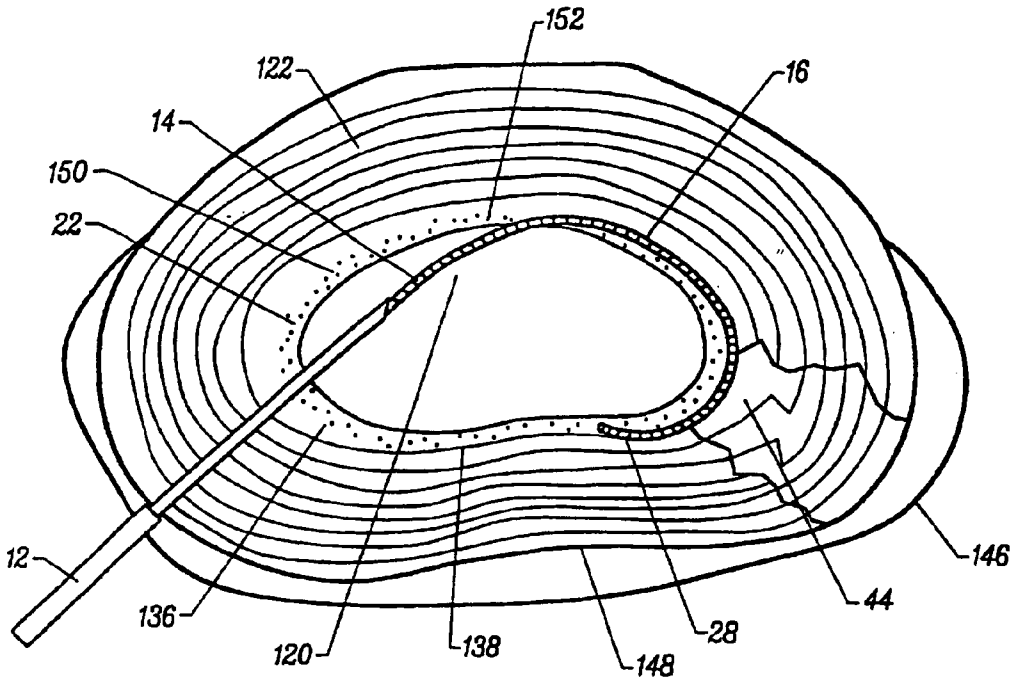

FIG. 4

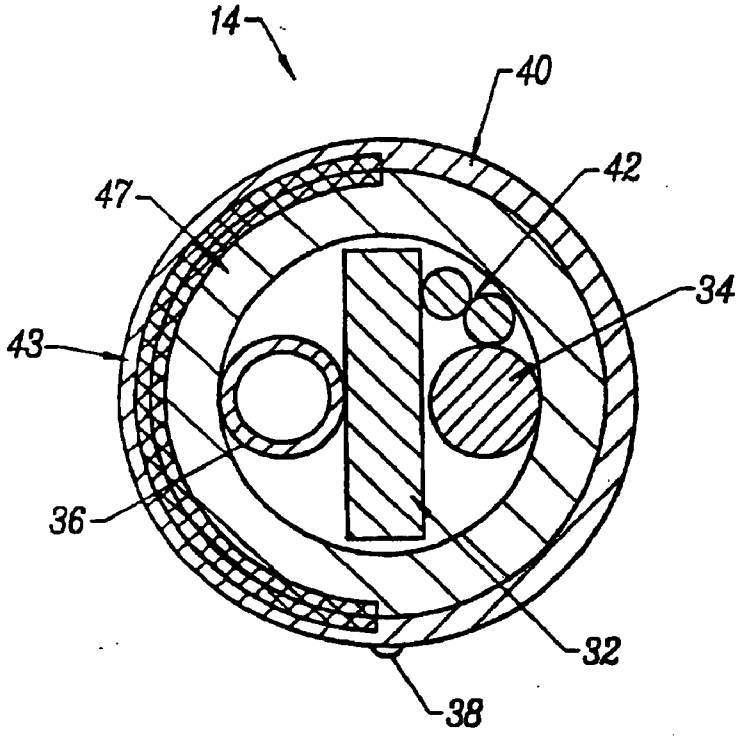

FIG. 5A

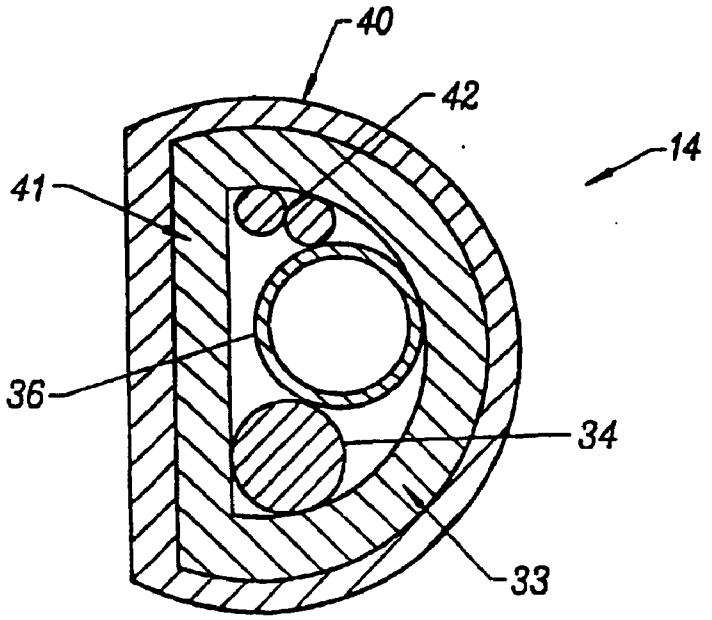

FIG. 5B

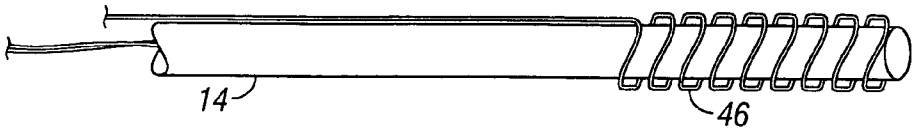

FIG. 6



FIG. 7

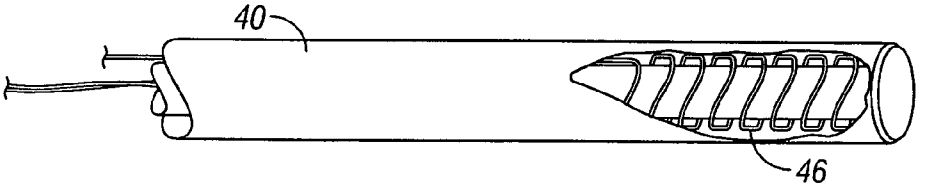

FIG. 8

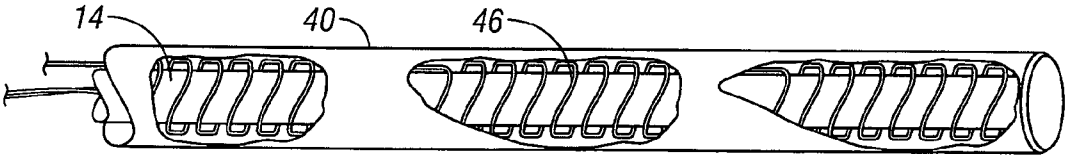

FIG. 9

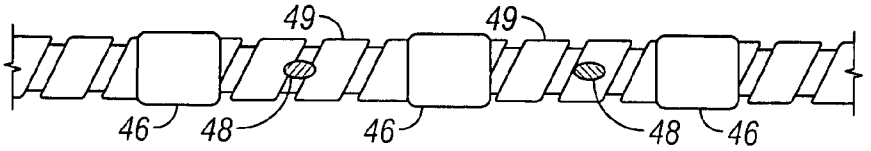

FIG. 10

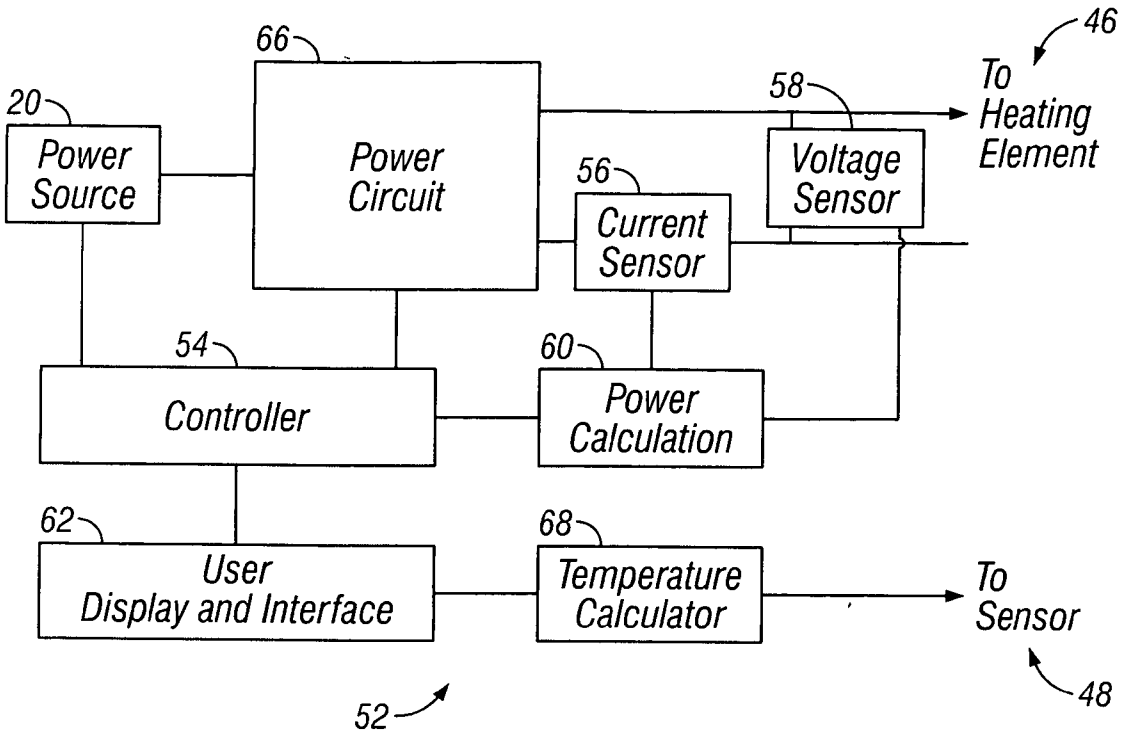
66
46
20
58
To
Heating
Element
Power
Source
Power
Circuit
Voltage
Sensor
56
Current
Sensor
54
60
Controller
Power
Calculation
62
68
User
Display and Interface
Temperature
Calculator
To
Sensor
52
48

FIG. 11

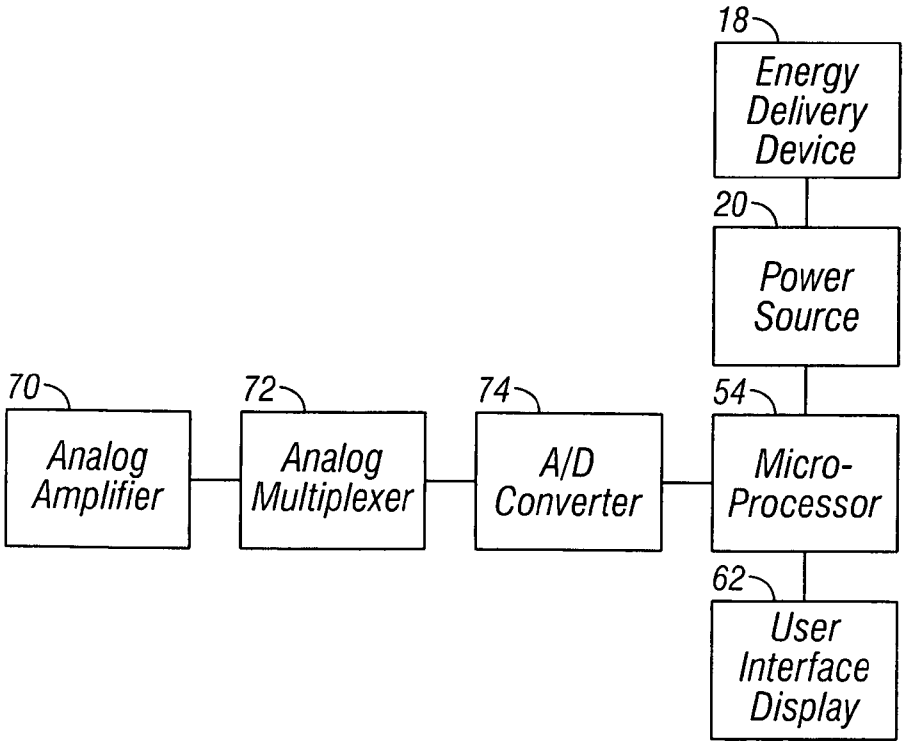
18
Energy
Delivery
Device
20
Power
Source
70
72
74
54
Analog
Amplifier
Analog
Multiplexer
A/D
Converter
Micro-
Processor
62
User
Interface
Display

FIG. 12

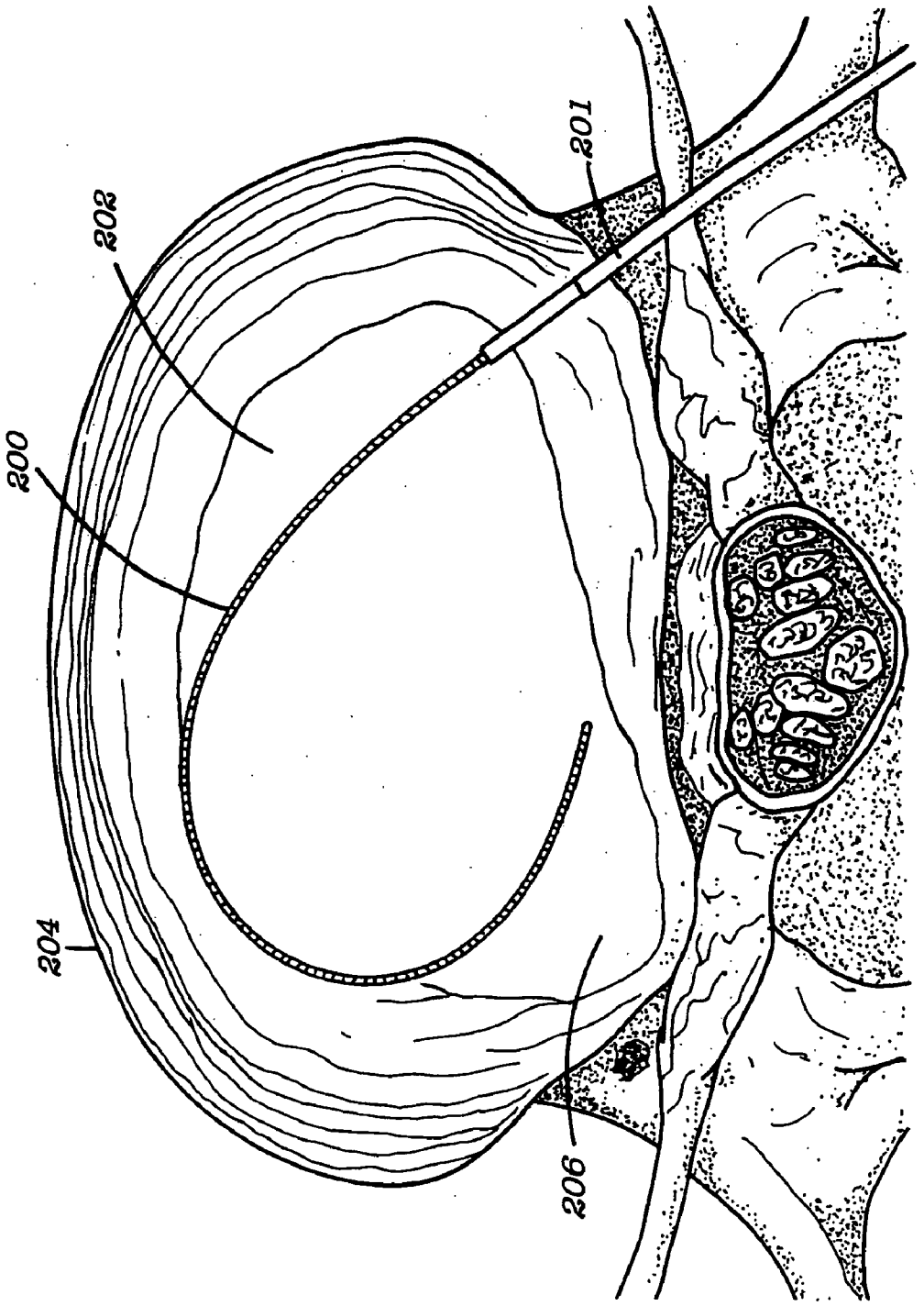

FIG. 13

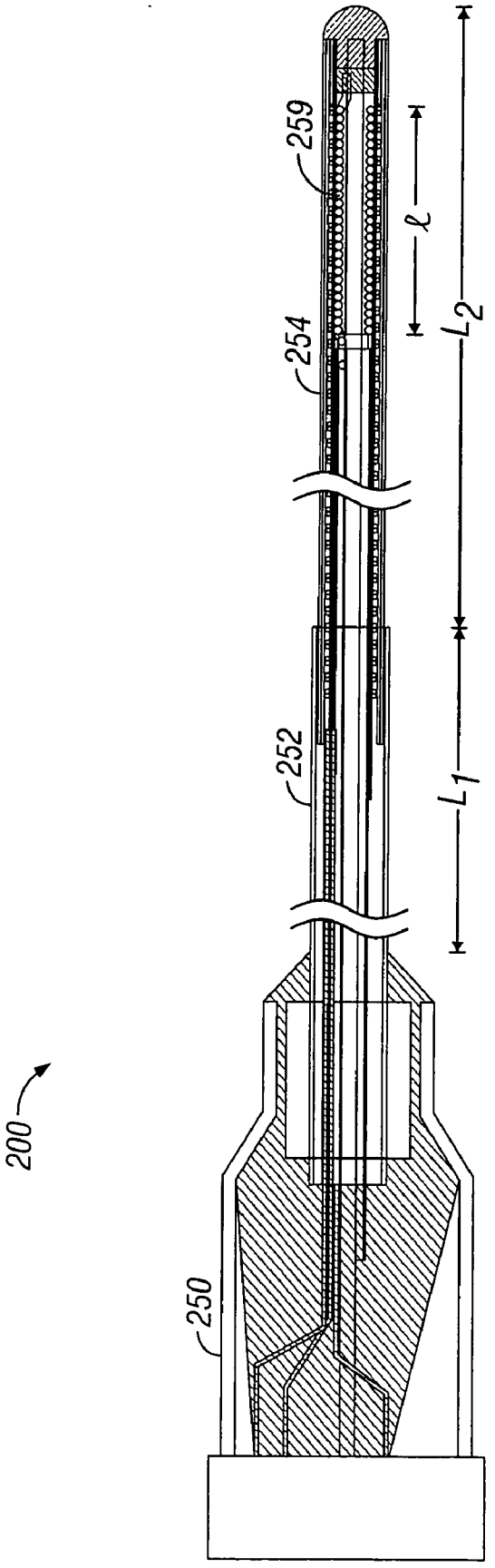

FIG. 14

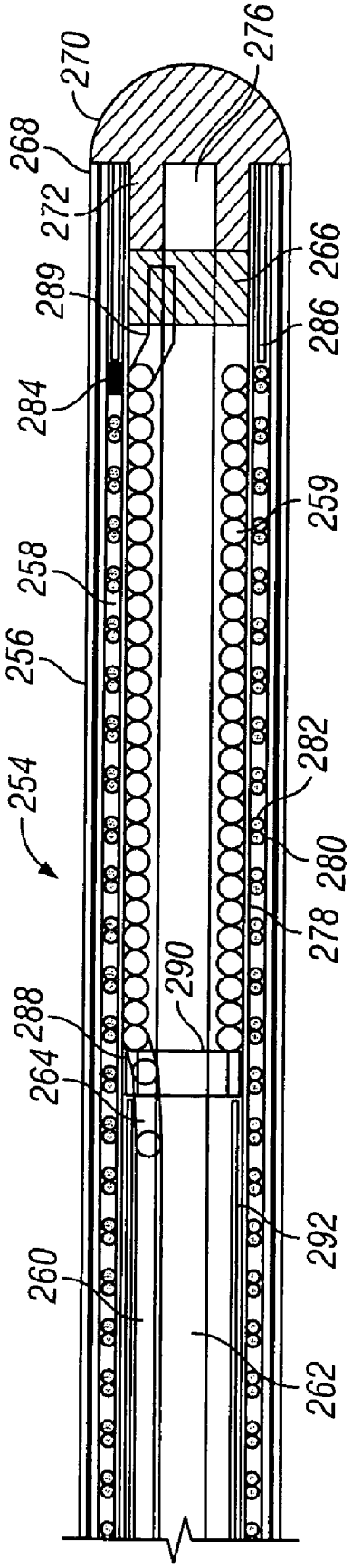
270
276
268
272
289
266
286
284
259
258
256
254
282
280
278
290
288
264
292
260
262

FIG. 15

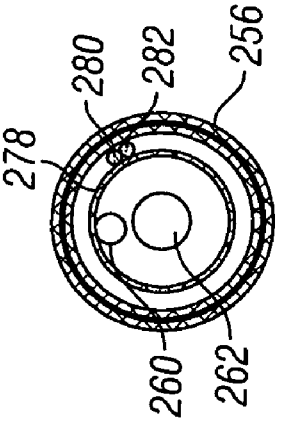
280
282
256
278
260
262

FIG. 16

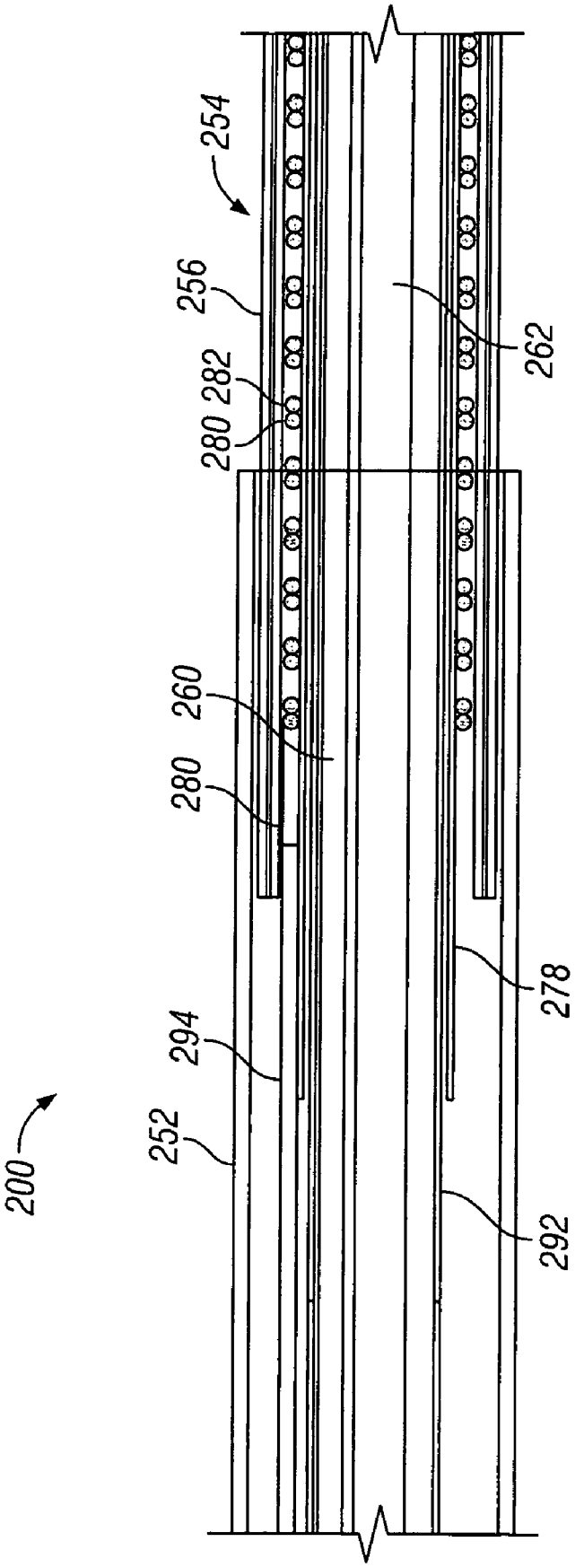

FIG. 17

INTERVERTEBRAL DECOMPRESSION

[0001] This application is a continuation-in-part of U.S. application Ser. No. 10/388,609, filed Mar. 17, 2003, which is a continuation of U.S. application Ser. No. 09/707,627, filed Nov. 6, 2000, now U.S. Pat. No. 6,547,810, U.S. application Ser. No. 09/236,816, filed Jan. 25, 1999, now U.S. Pat. No. 6,290,715, and a continuation-in-part of U.S. application Ser. Nos. 09/776,186 and 09/776,231, filed Feb. 1, 2001, which are continuations of U.S. application Ser. No. 09/272,806, filed Mar. 19, 1999, now U.S. Pat. No. 6,258,086, and claim priority to U.S. application Ser. No. 09/162,704, filed Sep. 29, 1998, now U.S. Pat. No. 6,099,514, U.S. application Ser. No. 09/153,552, filed Sep. 15, 1998, now U.S. Pat. No. 6,126,682, and U.S. application Ser. Nos. 08/881,525, 08/881,692 (now U.S. Pat. No. 6,073,051), Ser. No. 08/881,527 (now U.S. Pat. No. 5,980,504), Ser. No. 08/881,693 (now U.S. Pat. No. 6,007,570), Ser. No. 08/881,694 (now U.S. Pat. No. 6,095,149) each filed Jun. 24, 1997, and U.S. Provisional Application Nos. 60/047,820, 60/047,841, 60/047,818, 60/047,848 filed May 28, 1997, U.S. Provisional Application No. 60/045,941 filed May 8, 1997, and U.S. Provisional Application Nos. 60/029,734, 60/029,735, 60/029,600, 60/029,602 filed Oct. 23, 1996, a continuation-in-part of U.S. application Ser. No. 09/876,831 filed Jun. 6, 2001, and a continuation-in-part of U.S. application Ser. Nos. 09/792,628 filed Feb. 22, 2001 and 09/884,859 filed Jun. 18, 2001, which claim priority to U.S. Provisional Application No. 60/185,221 filed Feb. 25, 2000, each of which is incorporated herein by reference in its entirety.

[0002] This invention relates to methods and apparatuses for modifying intervertebral disc tissue and more particularly to the treatment of disc herniations and bulges using percutaneous techniques to avoid major surgical intervention.

BACKGROUND

[0003] Intervertebral disc abnormalities have a high incidence in the population and may result in pain and discomfort if they impinge on or irritate nerves. Disc abnormalities may be the result of trauma, repetitive use, metabolic disorders and the aging process and include such disorders but are not limited to degenerative discs. Abnormalities include (i) localized tears or fissures in the annulus fibrosus, (ii) localized disc herniations with contained or escaped extrusions, and (iii) chronic, circumferential bulging disc.

[0004] Disc fissures occur rather easily after structural degeneration (a part of the aging process that may be accelerated by trauma) of fibrous components of the annulus fibrosus. Sneezing, bending or just attrition can tear these degenerated annulus fibers, creating a fissure. The fissure may or may not be accompanied by extrusion of nucleus pulposus material into or beyond the annulus fibrosus. The fissure itself may be the sole morphological change, above and beyond generalized degenerative changes in the connective tissue of the disc. Even if there is no visible extrusion, biochemicals within the disc may still irritate surrounding structures. Disc fissures can be debilitatingly painful. Initial treatment is symptomatic, including bed rest, pain killers and muscle relaxants. More recently spinal fusion with cages have been performed when conservative treatment did not relieve the pain. The fissure may also be associated with a herniation of that portion of the annulus.

[0005] With a contained disc herniation, there are no free nucleus fragments in the spinal canal. Nevertheless, even a contained disc herniation is problematic because the outward protrusion can press on the spinal nerves or irritate other structures. In addition to nerve root compression, escaped nucleus pulposus contents may chemically irritate neural structures. Current treatment methods include reduction of pressure on the annulus by removing some of the interior nucleus pulposus material by percutaneous nucleotomy. However, complications include disc space infection, nerve root injury, hematoma formation, instability of the adjacent vertebrae and collapse of the disc from decrease in height.

[0006] Another disc problem occurs when the disc bulges outward circumferentially in all directions and not just in one location. Over time, the disc weakens and takes on a "roll" shape or circumferential bulge. Mechanical stiffness of the joint is reduced and the joint may become unstable. One vertebra may settle on top of another. This problem continues as the body ages and accounts for shortened stature in old age. With the increasing life expectancy of the population, such degenerative disc disease and impairment of nerve function are becoming major public health problems. As the disc "roll" extends beyond the normal circumference, the disc height may be compromised, foramina with nerve roots are compressed. In addition, osteophytes may form on the outer surface of the disc roll and further encroach on the spinal canal and foramina through which nerves pass. This condition is called lumbar spondylosis.

[0007] It has been thought that such disc degeneration creates segmental instability which disturbs sensitive structures which in turn register pain. Traditional, conservative methods of treatment include bed rest, pain medication, physical therapy or steroid injection. Upon failure of conservative therapy, spinal pain (assumed to be due to instability) has been treated by spinal fusion, with or without instrumentation, which causes the vertebrae above and below the disc to grow solidly together and form a single, solid piece of bone. The procedure is carried out with or without discectomy. Other treatments include discectomy alone or disc decompression with or without fusion. Nucleotomy can be performed by removing some of the nucleus to reduce pressure on the annulus. However, complications include disc space infection, nerve root injury, hematoma formation, and instability of adjacent vertebrae.

[0008] The ability to treat bulging intervertebral spinal discs has been a long standing challenge. A common treatment involves surgical intervention by discectomy or laminectomy procedures. These involve an open procedure and fairly extensive tissue disruption. At times these procedures are necessary to treat the pathology, e.g., for sequestered fragments of the nucleus pulposus that have escaped the disc. Other times the problems caused by disc bulges can be treated through percutaneous procedures that use needles or cannulae to access the disc and then employ catheter or small tool based treatment modes.

[0009] These interventions have been problematic in that alleviation of back pain and radicular pain is unpredictable even if surgery appears successful. In attempts to overcome these difficulties, new fixation devices have been introduced to the market, including but not limited to pedicle screws and interbody fusion cages. Although pedicle screws pro-

vide a high fusion success rate, there is still no direct correlation between fusion success and patient improvement in function and pain. Studies on fusion have demonstrated success rates of between 50% and 67% for pain improvement, and a significant number of patients have more pain postoperatively. Therefore, different methods of helping patients with degenerative disc problems need to be explored.

[0010] FIGS. **1**(*a*) and **1**(*b*) illustrate a cross-sectional anatomical view of a vertebra and associated disc and a lateral view of a portion of a lumbar and thoracic spine, respectively. Structures of a typical cervical spine (superior aspect) are shown in **FIG. 1**(*a*): **104**—lamina: **106**—spinal cord: **108**—dorsal root of spinal nerve; **114**—ventral root spinal nerve; **115**—posterior longitudinal ligament: **118**—intervertebral disc; **120**—nucleus pulposus; **122**—annulus fibrosus; **124**—anterior longitudinal ligament; **126**—vertebral body; **128**—pedicle; **130**—vertebral artery; **132**—vertebral veins; **134**—superior articular facet; **136**—posterior lateral portion of the annulus; **138**—posterior medial portion of the annulus; and **142**—spinous process. In **FIG. 1**(*a*), one side of the intervertebral disc **118** is not shown so that the superior vertebral body **126** can be seen. **FIG. 1**(*b*) is a lateral aspect of the lower portion of a typical spinal column showing the entire lumbar region and part of the thoracic region and displaying the following structures: **118**—intervertebral disc; **126**—vertebral body; **142**—spinous process; **170**—inferior vertebral notch; **110**—spinal nerve; **174**—superior articular process; **176**—lumbar curvature; and **180**—sacrum.

[0011] The presence of the spinal cord and the posterior portion of the vertebral body, including the spinous process, and superior and inferior articular processes, prohibit introduction of a needle or trocar from a directly posterior position. This is important because the posterior disc wall is the site of symptomatic annulus tears and disc protrusions/extrusions that compress or irritate spinal nerves for most degenerative disc syndromes. The inferior articular process, along with the pedicle and the lumbar spinal nerve, form a small "triangular" window **168** through which introduction can be achieved from the posterior lateral approach. **FIG. 1**(*d*) looks down on an instrument introduced by the posterior lateral approach. It is well known to those skilled in the art that percutaneous access to the disc is achieved by placing an introducer into the disc from this posterior lateral approach, but the triangular window does not allow much room to maneuver. Once the introducer pierces the tough annulus fibrosus, the introducer is fixed at two points along its length and has very little freedom of movement. Thus, this approach has allowed access only to small central and anterior portions of the nucleus pulposus. Current methods do not permit percutaneous access to the posterior half of the nucleus or to the posterior wall of the disc. Major and potentially dangerous surgery is required to access these areas.

SUMMARY

[0012] It is desirable to diagnose and treat disc abnormalities at locations previously not accessible via percutaneous approaches and without substantial destruction to the disc, and to provide for a percutaneous procedure that can be performed by non-surgical specialists commonly performing spine pain management procedures (interventional anesthesiologists and radiologists, etc.), that addresses the symptoms brought on by bulging discs (i.e. radicular pain that shoots down the leg, sciatica), that is performed through a small diameter introducer, and that treats the tissue at the site of the bulge.

[0013] According to one aspect of the invention, a method of delivering energy to an intervertebral disc includes positioning an energy delivery device adjacent an inner wall of the disc, and shrinking the nucleus pulposus.

[0014] Embodiments of this aspect of the invention may include one or more of the following features.

[0015] The method includes positioning an energy delivery element of the device adjacent a bulge in the intervertebral disc. The method includes monitoring temperature and controlling energy delivery based on the monitored temperature. The method includes providing a catheter having the energy delivery device, introducing the catheter into the intervertebral disc, and advancing the catheter along the inner wall of the disc.

[0016] According to another aspect of the invention, a device for delivering energy includes a catheter with a distal portion configured to be inserted into a patient and to follow a natural boundary of a patient tissue, and an energy delivery element located at the distal portion for treating tissue.

[0017] Embodiments of this aspect of the invention may include one or more of the following features.

[0018] The distal portion includes a braided polymeric material. The catheter has a proximal portion including a tube for transmitted torque to the distal portion. The tube is attached to the braided polymeric material by a bonding agent.

[0019] In an illustrated embodiment, the energy delivery element is a resistive heating coil having a length, e.g., of about 1.5 cm.

[0020] The braided polymeric material is in the form of a tube defining a lumen and the energy delivery element and a pair of wires are located within the lumen. The pair of wires are spirally wound about a tube. The wires are joined in the distal portion to form a peripherally located thermocouple.

[0021] The distal portion includes an atraumatic tip formed of a heat UV cured polymer.

[0022] The details of one or more embodiments of the invention are set forth in the accompanying drawings and the description below. Other features, objects, and advantages of the invention will be apparent from the description and drawings, and from the claims.

DESCRIPTION OF DRAWINGS

[0023] **FIG. 1**(*a*) is a superior cross-sectional anatomical view of a cervical disc and vertebra.

[0024] **FIG. 1**(*b*) is a lateral anatomical view of the lower spine.

[0025] **FIG. 1**(*c*) is a posterior-lateral anatomical view of two lumbar vertebrae and illustration of the triangular working zone.

[0026] **FIG. 1**(*d*) is a superior cross-sectional view of the required posterior lateral approach.

[0027] **FIG. 2** is a second cross-sectional view of an intervertebral disc illustrating a disc plane of the intervertebral disc and an inferior/superior plane.

[0028] **FIG. 3**(*a*) is a plan view of an introducer and an instrument of the invention in which solid lines illustrate the position of the instrument in the absence of bending forces and dotted lines indicate the position the distal portion of the instruments would assume under bending forces applied to the intradiscal section of the instrument.

[0029] **FIG. 3**(*b*) is an end view of the handle of the embodiment shown in **FIG. 3**(*a*).

[0030] **FIG. 4** is a cross-sectional view of an intervertebral disc with a portion of the intervertebral apparatus of the present invention inserted in the intervertebral disc.

[0031] **FIG. 5**(*a*) is a cross-sectional view of the intervertebral segment of the embodiment of the invention shown in **FIG. 3**(*a*) taken along the line **5**(*a*)-**5**(*a*) of **FIG. 3**(*a*).

[0032] **FIG. 5**(*b*) is a cross-sectional view of the intervertebral segment of a second embodiment of the present invention having a combined wall/guiding mandrel.

[0033] **FIG. 6** is a perspective view of an embodiment of an apparatus of the present invention with a resistive heating coil positioned around an exterior of an intradiscal section of the catheter.

[0034] **FIG. 7** is a partial cross-sectional view of an embodiment an apparatus of the invention illustrating a sensor positioned in an interior of the intradiscal section of the catheter.

[0035] **FIG. 8** is a partial cross-sectional view of an embodiment of the apparatus of the invention further including a sheath positioned around the resistive heating coil.

[0036] **FIG. 9** is a partial cross-sectional view of an embodiment of the apparatus of **FIG. 6** with multiple resistive heating coils.

[0037] **FIG. 10** is a plan view of an embodiment of the intradiscal section of a catheter of the invention with a helical structure.

[0038] **FIG. 11** is a block diagram of an open or closed loop feedback system that couples one or more sensors to an energy source.

[0039] **FIG. 12** is a block diagram of an embodiment illustrating an analog amplifier, analog multiplexer and microprocessor used with the feedback control system of **FIG. 11**.

[0040] **FIG. 13** is an illustration of a decompression catheter treating a bulge in a disc.

[0041] **FIG. 14** is a cross-sectional view of the decompression catheter.

[0042] **FIG. 15** is a cross-sectional view of a distal region of the decompression catheter.

[0043] **FIG. 16** is another cross-sectional view of the distal region of the decompression catheter.

[0044] **FIG. 17** is a cross-sectional view of a middle region of the decompression catheter.

DETAILED DESCRIPTION

[0045] The present invention provides method and apparatus for treating intervertebral disc disorders, particularly fissures of the annulus fibrosus, which may or may not be accompanied with contained or escaped extrusions, herniations, and bulges.

[0046] In general, an apparatus of the invention is in the form of an externally guidable intervertebral disc apparatus for accessing and manipulating disc tissue present at a selected location of an intervertebral disc having a nucleus pulposus and an annulus fibrosus, the annulus having an inner wall. Use of a temperature-controlled energy delivery element, combined with the navigational control of the inventive catheter, provides preferential, localized heating to treat the fissure. For ease of reference to various manipulations and distances described below, the nucleus pulposus can be considered as having a given diameter in a disc plane between opposing sections of the inner wall. This nucleus pulposus diameter measurement allows instrument sizes (and parts of instruments) designed for one size disc to be readily converted to sizes suitable for an instrument designed for a different size of disc.

[0047] The operational portion of the apparatus of the invention is brought to a location in or near the disc's fissure or bulge using techniques and apparatuses typical of percutaneous interventions. For convenience and to indicate that the apparatus of the invention can be used with any insertional apparatus that provides proximity to the disc, including many such insertional apparatuses known in the art, the term "introducer" is used to describe this aid to the method. An introducer has an internal introducer lumen with a distal opening at a terminus of the introducer to allow insertion (and manipulation) of the operational parts of the apparatus into (and in) the interior of a disc.

[0048] The operational part of the apparatus comprises an elongated element referred to as a catheter, various parts of which are located by reference to a distal end and a proximal end at opposite ends of its longitudinal axis. The proximal end is the end closest to the external environment surrounding the body being operated upon (which may still be inside the body in some embodiments if the catheter is attached to a handle insertable into the introducer). The distal end of the catheter is intended to be located inside the disc under conditions of use. The catheter is not necessarily a traditional medical catheter (i.e., an elongate hollow tube for admission or removal of fluids from an internal body cavity) but is a defined term for the purposes of this specification. "Catheter" has been selected as the operant word to describe this part of the apparatus, as the inventive apparatus is a long, flexible tube which transmits energy and/or material from a location external to the body to a location internal to the disc being accessed upon, such as a collagen solution and heat to the annular fissure. Alternatively, material can be transported in the other direction to remove material from the disc, such as removing material by aspiration to decrease pressure which is keeping the fissure open and aggravating the symptoms due to the fissure.

[0049] The catheter is adapted to slidably advance through the introducer lumen, the catheter having an intradiscal

section at the distal end of the catheter, the intradiscal section being extendible through the distal opening at the terminus of the introducer into the disc. Although the length of the intradiscal portion can vary with the intended function as explained in detail below, a typical distance of extension is at least one-half the diameter of the nucleus pulposus, preferably in the range of one-half to one and one-half times the circumference of the nucleus.

[0050] In order that the functional elements of the catheter can be readily guided to the desired location within a disc, the intradiscal portion of the catheter is manufactured with sufficient rigidity to avoid collapsing upon itself while being advanced through the nucleus pulposus and navigated around the inner wall of the annulus fibrosus. The intradiscal portion, however, has insufficient rigidity to puncture the annulus fibrosus under the same force used to advance the catheter through the nucleus pulposus and around the inner wall of the annulus fibrosus. Absolute penetration ability will vary with sharpness and stiffness of the tip of the catheter, but in all cases a catheter of the present invention will advance more readily through the nucleus pulposus than through the annulus fibrosus.

[0051] In preferred embodiments, the intradiscal section of the catheter further has differential bending ability in two orthogonal directions at right angles to the longitudinal axis. This causes the catheter to bend along a desired plane (instead of at random). Also when a torsional (twisting) force is applied to the proximal end of the catheter to re-orient the distal end of the catheter, controlled advancement of the catheter in the desired plane is possible.

[0052] A further component of the catheter is a functional element located in the intradiscal section for diagnosis or for adding energy and adding and/or removing material at the selected location of the disc where the annular tear, herniation, or bulge is to be treated. The apparatus allows the functional element to be controllably guided by manipulation of the proximal end of the catheter into a selected location for localized treatment of the annular fissure.

[0053] The method of the invention which involves manipulating disc tissue at the annular fissure, herniation, or bulge, is easily carried out with an apparatus of the invention. An introducer is provided that is located in a patient's body so that its proximal end is external to the body and the distal opening of its lumen is internal to the body and (1) internal to the annulus fibrosus or (2) adjacent to an annular opening leading to the nucleus pulposus, such as an annular tear or trocar puncture that communicates with the nucleus pulposus. The catheter is then slid into position in and through the introducer lumen so that the functional element in the catheter is positioned at the selected location of the disc by advancing or retracting the catheter in the introducer lumen and optionally twisting the proximal end of the catheter to precisely navigate the catheter. By careful selection of the rigidity of the catheter and by making it sufficiently blunt to not penetrate the annulus fibrosus, and by careful selection of the flexibility in one plane versus the orthogonal plane, the distal portion of the catheter will curve along the inner wall of the annulus fibrosus as it is navigated and is selectively guided to an annular tear, herniation, or bulge at selected location(s) in the disc. Energy is applied and/or material is added or removed at the selected location of the disc via the functional element.

[0054] Each of the elements of the apparatus and method will now be described in more detail. However, a brief description of disc anatomy is provided first, as sizes and orientation of structural elements of the apparatus and operations of the method can be better understood in some cases by reference to disc anatomy.

[0055] The annulus fibrosus is comprised primarily of tough fibrous material, while the nucleus pulposus is comprised primarily of an amorphous colloidal gel. There is a transition zone between the annulus fibrosus and the nucleus pulposus made of both fibrous-like material and amorphous colloidal gel. The border between the annulus fibrosus and the nucleus pulposus becomes more difficult to distinguish as a patient ages, due to degenerative changes. This process may begin as early as 30 years of age. For purposes of this specification, the inner wall of the annulus fibrosus can include the young wall comprised primarily of fibrous material as well as the transition zone which includes both fibrous material and amorphous colloidal gels (hereafter collectively referred to as the "inner wall of the annulus fibrosus"). Functionally, that location at which there is an increase in resistance to catheter penetration and which is sufficient to cause bending of the distal portion of the catheter into a radius less than that of the internal wall of the annulus fibrosus is considered to be the "inner wall of the annulus fibrosus".

[0056] As with any medical instrument and method, not all patients can be treated, especially when their disease or injury is too severe. There is a medical gradation of degenerative disc disease (stages 1-5). See, for example, Adams et al., "The Stages of Disc Degeneration as Revealed by Discograms," J. Bone and Joint Surgery, 68, 36-41 (1986). As these grades are commonly understood, the methods of instrument navigation described herein would probably not be able to distinguish between the nucleus and the annulus in degenerative disease of grade 5. In any case, most treatment is expected to be performed in discs in stages 3 and 4, as stages 1 and 2 are asymptomatic in most patients, and stage 5 may require disc removal and fusion.

[0057] Some of the following discussion refers to motion of the catheter inside the disc by use of the terms "disc plane""oblique plane" and "cephalo-caudal plane." These specific terms refer to orientations of the catheter within the intervertebral disc. Referring now to **FIG. 2** (which shows a vertical cross-section of a disc), a disc plane **30** of the intervertebral disc is generally a plane of some thickness 27 within the nucleus pulposus **120** orthogonal to the axis formed by the spinal column (i.e., such a disc plane is substantially horizontal in a standing human, corresponding to the "flat" surface of a vertebra). A oblique plane **31** extends along any tilted orientation relative to axial plane **30**; however, when the plane is tilted 90.degree., such a plane would be substantially vertical in a standing human and is referred to as a cephalo-caudal plane. Reference is made to such planes to describe catheter movements with respect to the disc plane. In various embodiments, disc plane **30** has a thickness no greater than the thickness of the intervertebral disc, preferably a thickness no greater than 75% of a thickness of the intervertebral disc, and more preferably a thickness no greater than 50% of a thickness of the intervertebral disc. Referring to **FIG. 3**(*a*), movement of the intradiscal portion **16** of catheter **14** is confined within a disc plane by the physical and mechanical properties of the

intradiscal portion **16** during advancement of the catheter when the bending plane of the catheter is aligned with the disc plane until some additional force is applied to the catheter by the physician. A twisting force (which can be applied mechanically, electrically, or by any other means) acting on the proximal end of the catheter changes the forces acting on the distal end of the catheter so that the plane of the catheter bend can be angled relative to the disc plane as the catheter is advanced. Thus, the physician can cause the distal end of the catheter to move up or down, depending on the direction of the twist.

[**0058**] Turning now to the introducer, a detailed description of an entire apparatus should not be necessary for those skilled in the art of percutaneous procedures and the design of instruments intended for such use. The method of the invention can also be carried out with endoscopic instruments, and an endoscopic apparatus having structural parts that meet the descriptions set forth in this specification would also be an apparatus of the invention.

[**0059**] In general, a device of the invention can be prepared in a number of different forms and can consist (for example) of a single instrument with multiple internal parts or a series of instruments that can be replaceably and sequentially inserted into a hollow fixed instrument (such as a needle) that guides the operational instruments to a selected location in or adjacent to an annular fissure. Because prior patents do not fully agree on how to describe parts of percutaneous instruments, terminology with the widest common usage will be used.

[**0060**] The introducer, in its simplest form, can consist of a hollow needle-like device (optionally fitted with an internal removable obturator or trocar to prevent clogging during initial insertion) or a combination of a simple exterior cannula that fits around a trocar. The result is essentially the same: placement of a hollow tube (the needle or exterior cannula after removal of the obturator or trocar, respectively) through skin and tissue to provide access into the annulus fibrosus. The hollow introducer acts as a guide for introducing instrumentation. More complex variations exist in percutaneous instruments designed for other parts of the body and can be applied to design of instruments intended for disc operations. Examples of such obturators are well known in the art. A particularly preferred introducer is a 17- or 18-gauge, thin-wall needle with a matched obturator, which after insertion is replaced with a catheter of the present invention.

[**0061**] Referring now to the figures, FIGS. **3**(*a*) and **3**(*b*) illustrate one embodiment of a catheter **14** for treating discogenic back pain as it would appear inserted into an introducer **12**. The apparatus shown is not to scale, as an exemplary apparatus (as will be clear from the device dimensions below) would be relatively longer and thinner; the proportions used in **FIG. 3**(*a*) were selected for easier viewing by the reader. The distal portion of an intervertebral apparatus operates inside an introducer **12** having an internal introducer lumen **13**. A flexible, movable catheter **14** is at least partially positionable in the introducer lumen **13**. Catheter **14** includes a distal end section **16** referred to as the intradiscal section, which is designed to be the portion of the catheter that will be pushed out of the introducer lumen and into the nucleus pulposus, where movement of the catheter will be controlled to bring operational portions of the catheter into the selected location(s) with regard to the annular tear. In **FIG. 3**(*a*), dashed lines are used to illustrate bending of the intradiscal portion of the catheter as it might appear under use, as discussed in detail later in the specification. **FIG. 3**(*b*) shows an end view of handle **11** at the proximal end of the catheter, with the handle **11** having an oval shape to indicate the plane of bending, also discussed in detail later in the specification. Other sections and properties of catheter **14** are described later.

[**0062**] For one embodiment suitable for intervertebral discs, the outer diameter of catheter **14** is in the range of 0.2 to 5 mm, the total length of catheter **14** (including the portion inside the introducer) is in the range of 10 to 60 cm, and the length of introducer **12** is in the range of 5 to 50 cm. For one preferred embodiment, the catheter has a diameter of 1 mm, an overall length of 30 cm, and an introduced length of 15 cm (for the intradiscal section). With an instrument of this size, a physician can insert the catheter for a distance sufficient to reach selected location(s) in the nucleus of a human intervertebral disc.

[**0063**] **FIG. 4** illustrates the anatomy of an intervertebral disc and shows an apparatus of the invention inserted into a disc. Structures of the disc are identified and described by these anatomical designations: the posterior lateral inner annulus **136**, posterior medial inner annulus **138**, annulus fibrosus **122**/nucleus pulposus **120** interface, the annulus/dural interface **146**, annulus/posterior longitudinal ligament interface **148**, anterior lateral inner annulus **150**, and the anterior medial inner annulus **152**.

[**0064**] Referring again to **FIG. 4**, the mechanical characteristics of intradiscal section **16** of catheter **14** are selected to have (1) sufficient column strength along the longitudinal axis of the catheter to avoid collapse of the catheter and (2) different flexural strengths along the two axes orthogonal to the longitudinal axis to allow controlled bending of the catheter. These parameters make the catheter conformable and guidable along inner wall **22** of an annulus fibrosus **122** to reach selected location(s), such as the posterior medial annulus **138**.

[**0065**] Specific mechanical characteristics of particular designs will be described later in the examples that follow. Generally, however, the necessary design features can be selected (in an interrelated fashion) by first providing the intradiscal section of the catheter with sufficient column strength to be advanceable through normal human nucleus pulposus and around the inner wall of the annulus fibrosus without collapse. Here "collapse" refers to bending sufficient to inhibit further advancement at the tip. Advancement of the tip is restricted by 1) sliding through the normal gelatinous nucleus pulposus, 2) contacting denser clumps of nucleus pulposus and 3) curving and advancing along the inner wall of the annulus. Column strength can be increased in many ways known in the art, including but not limited to selecting materials (e.g., metal alloy or plastic) with a high resistance to bending from which to form the catheter, forming the structure of the catheter with elements that add stiffening (such as bracing), and increasing the thickness of the structural materials. Column strength can be decreased to favor bending by selecting the opposite characteristics (e.g., soft alloys, hinging, and thin structural elements).

[**0066**] When a catheter collapses, the physician feels an abrupt decrease in resistance. At that time, the catheter forms

one or more loops or kinks between the tip of the introducer and the distal tip of the catheter.

[0067] Particularly preferred for annular tears at the posterior of the annulus, the tip **28** of intradiscal section **16** is biased or otherwise manufactured so that it forms a pre-bent segment prior to contact with the annulus fibrosus as shown in **FIG. 3**(*a*). The bent tip will cause the intradiscal section to tend to continue to bend the catheter in the same direction as the catheter is advanced. This enhanced curving of a pre-bent catheter is preferred for a catheter that is designed to reach a posterior region of the nucleus pulposus; however, such a catheter must have sufficient column strength to prevent the catheter from collapsing back on itself.

[0068] The intradiscal section not only must allow bending around the relatively stronger annulus fibrosus in one direction, but also resist bending in the orthogonal direction to the plane in which bending is designed to occur. By twisting the proximal end of a catheter and thus controlling the orientation of the plane of bending while concurrently controlling the advancement of the catheter through the nucleus, a physician can navigate the catheter and its instrumentation within the disc.

[0069] The bending stiffness of the intradiscal section as measured in Taber stiffness units (using a length of the inventive catheter as the test strip rather than the standard dimension, homogeneous-material test strip) should be in the range of 2-400 units (in a 0-10,000 unit range) in the desired bending plane, preferably 3-150 units. In preferred embodiments, stiffness is in the range of 4-30 units in the desired bending plane. In all cases, the bending stiffness preferably is 2-20 times higher for bending in the orthogonal direction.

[0070] The column or compressive strength of the intradiscal section (force required to buckle a segment whose length is 25 or more times its diameter) is in the range of 0.05 to 4 kg, preferably 0.05 to 2 kg. In the most preferred embodiments, it is in the range of 0.1 to 1 kg. In the proximal shaft section (i.e., the part of the catheter proximal to the intradiscal section), this strength is in the range of 0.1 to 25 kg, preferably 0.2 to 7 kg. In the most preferred embodiments, it is in the range of 0.7 to 4 kg.

[0071] Returning now to **FIG. 4**, intradiscal section **16** is guidable and can reach the posterior, the posterior lateral, and the posterior medial regions of the posterior wall of the annulus fibrosus, as well as other selected section(s) on or adjacent to inner wall **22**. In order to move the functional section of the catheter into a desired nucleus location, intradiscal section **16** is first positioned in the nucleus pulposus **120** by means of the introducer.

[0072] In most uses, introducer **12** pierces annulus fibrosus **122** and is advanced through the wall of the annulus fibrosus into the nucleus pulposus. In such embodiments, introducer **12** is then extended a desired distance into nucleus pulposus **120**. Catheter **14** is advanced through a distal end of introducer **12** into nucleus pulposus **120**. Advancement of the catheter **14**, combined with increased resistance to advancement at the annulus fibrosus, causes the tip of the intradiscal section to bend relative to the longitudinal axis of introducer **12** when the intradiscal section contacts the inner wall of the annulus fibrosus **122**. Catheter **14** is navigated along inner wall **22** of annulus fibrosus **122** to selected site(s) of inner wall **22** or within nucleus pulposus **120**. For example, intradiscal section **16** can be positioned in or adjacent to a fissure or tear **44** of annulus fibrosus **122**, or a herniation or bulge in the nucleus pulposus.

[0073] The distal portion **28** of intradiscal section **16** is designed to be incapable of piercing the annulus fibrosus **122**. The inability of distal portion **28** to pierce the annulus can be the result of either shape of the tip **29** or flexibility of distal portion **28**, or both. The tip **29** is considered sufficiently blunt when it does not penetrate the annulus fibrosus but is deflected back into the nucleus pulposus or to the side around the inner wall of the annulus when the tip **29** is advanced. The tip can be made with a freely rotating ball. This embodiment provides not only a blunt surface but also a rolling contact to facilitate navigation.

[0074] Many percutaneous and endoscopic instruments designed for other purposes can be adapted for use in this invention. This permits other functions at the desired location after the catheter is advanced to that position. For example, cutting edges and sharp points can be present in the distal portion **28** if they can be temporarily masked by a covering element. However, such devices must be sufficiently flexible and thin to meet the design characteristics described in this specification.

[0075] In another embodiment an introducer **12** pierces the skin and reaches an exterior of annulus fibrosus **122**. A rigid and sharp trocar is then advanced through introducer **12**, to pierce annulus fibrosus **122** and enter the disc. The trocar is then removed. and catheter **14** is advanced through a distal end of introducer **12**, following the path created by the trocar in annulus fibrosus **122** beyond the end of the introducer. In such cases, the introducer is outside the annulus fibrosus **122** and only the catheter with its guidable distal portion **16** is present inside the disc. The physician can manipulate the proximal portion **15** of the catheter to move the distal portion of the catheter to a selected location for treating a fissure of the annulus fibrosus **122**.

[0076] Catheter **14** is not always pre-bent as shown in **FIG. 3**(*a*), but optionally can include a biased distal portion **28** if desired. "Pre-bent" or "biased" means that a portion of the catheter (or other structural element under discussion) is made of a spring-like material that is bent in the absence of external stress but which. under selected stress conditions (for example, while the catheter is inside the introducer), is linear. Such a biased distal portion can be manufactured from either spring metal or superelastic memory material (such as Tinel.RTM. nickel-titanium alloy, Raychem Corp., Menlo Park Calif.). The introducer (at least in the case of a spring-like material for forming the catheter) is sufficiently strong to resist the bending action of the bent tip and maintain the biased distal portion in alignment as it passes through the introducer. Compared to unbiased catheters, a catheter with a biased distal portion **28** encourages advancement of intradiscal section **16** substantially in the direction of the bend relative to other lateral directions as shown by the bent location of intradiscal section **16** indicated by dashed lines in **FIG. 3**(*a*). Biasing the catheter tip also further decreases likelihood that the tip **29** will be forced through the annulus fibrosus under the pressure used to advance the catheter.

[0077] In addition to biasing a catheter tip prior to insertion into an introducer, a catheter tip can be provided that is

deflected by mechanical means, such as a wire attached to one side of the tip that deflects the tip in the desired direction upon application of force to the proximal end of the deflection wire. Any device in which bending of the tip of a catheter of the invention is controlled by the physician is "actively steerable." In addition to a tip that is actively steerable by action of a wire, other methods of providing a bending force at the tip can be used, such as hydraulic pressure and electromagnetic force (such as heating a shaped memory alloy to cause it to contract). Any of a number of techniques can be used to provide selective bending of the catheter in one lateral direction.

[0078] Referring now to **FIG. 5**(*a*), a guiding mandrel **32** can be included both to add rigidity to the catheter and to inhibit movement of catheter **14** in the inferior and superior directions while positioned and aligned in the disc plane of a nucleus pulposus **120**. This aids the functions of preventing undesired contact with a vertebra and facilitating navigation. The mandrel can be flattened to encourage bending in a plane (the "plane of the bend") orthogonal to the "flat" side of the mandrel. "Flat" here is a relative term, as the mandrel can have a D-shaped cross-section, or even an oval or other cross-sectional shape without a planar face on any part of the structure. Regardless of the exact configuration, bending will preferentially occur in the plane formed by the principal longitudinal axis of the mandrel and a line connecting the opposite sides of the shortest cross-sectional dimension of the mandrel (the "thin" dimension). To provide sufficient resistance to the catheter bending out of the desired plane while encouraging bending in the desired plane, the minimum ratio is 1.25:1 ("thickest" to "thinnest" cross-sectional dimensions along at least a portion of the intradiscal section). The maximum ratio is 20:1, with the preferred ratio being between 1.5:1 and 16:3, more preferably between 2:1 and 3.5:1. These ratios are for a solid mandrel and apply to any material, as deflection under stress for uniform solids is inversely proportional to the thickness of the solid in the direction (dimension) in which bending is taking place. For other types of mandrels (e.g., hollow or non-uniform materials), selection of dimensions and/or materials that provide the same relative bending motions under stress are preferred.

[0079] A catheter of the present invention is designed with sufficient torsional strength (resistance to twisting) to prevent undesired directional movement of the catheter. Mandrels formed from materials having tensile strengths in the range set forth in the examples of this specification provide a portion of the desired torsional strength. Other materials can be substituted so long as they provide the operational functions described in the examples and desired operating parameters.

[0080] While the mandrel can provide a significant portion of the column strength, selective flexibility, and torsional strength of a catheter, other structural elements of the catheter also contribute to these characteristics. Accordingly, it must be kept in mind that it is the characteristics of the overall catheter that determine suitability of a particular catheter for use in the methods of the invention. For example, a mandrel that does not have sufficient torsional strength when acting alone can be combined with another element, such as anti-twisting outer sheath **40** or inserting/advancing a second mandrel, to provide a catheter of the invention. Similarly, components inside the catheter, such as a heating element or potting compound, can be used to strengthen the catheter or provide directional flexibility at the locations of these elements along the catheter.

[0081] It is not necessary that the guiding mandrel **32** be flattened along its entire length. Different mandrels can be designed for different sized discs, both because of variations in disc sizes from individual to individual and because of variations in size from disc to disc in one patient. The bendable portion of the mandrel is preferably sufficient to allow intradiscal portion **16** of the catheter to navigate at least partially around the circumference of the inner wall of the annulus fibrosus (so that the operational functions of the catheter can be carried out at desired location(s) along the inner wall of the annulus fibrosus). Shorter bendable sections are acceptable for specialized instruments. In most cases, a flattened distal portion of the mandrel of at least 10 mm, preferably 25 mm, is satisfactory. The flattened portion can extend as much as the entire length of the mandrel, with some embodiments being flattened for less than 15 cm, in other cases for less than 10 cm, of the distal end of the guide mandrel.

[0082] In preferred embodiments the guide mandrel or other differential bending control element is maintained in a readily determinable orientation by a control element located at the proximal end of the catheter. The orientation of the direction of bending and its amount can be readily observed and controlled by the physician. One possible control element is simply a portion of the mandrel that extends out of the proximal end of the introducer and can be grasped by the physician, with a shape being provided that enables the physician to determine the orientation of the distal portion by orientation of the portion in the hand. For example, a flattened shape can be provided that mimics the shape at the distal end (optionally made larger to allow better control in the gloved hand of the physician, as in the handle **11** of **FIG. 3**(*b*)). More complex proximal control elements capable of grasping the proximal end of the mandrel or other bending control element can be used if desired, including but not limited to electronic. mechanical, and hydraulic controls for actuation by the physician.

[0083] The guide mandrel can also provide the function of differential flexibility by varying the thickness in one or more dimensions (for example, the "thin" dimension, the "thick" dimension, or both) along the length of the mandrel. A guide mandrel that tapers (becomes gradually thinner) toward the distal tip of the mandrel will be more flexible and easier to bend at the tip than it is at other locations along the mandrel. A guide mandrel that has a thicker or more rounded tip than more proximal portions of the mandrel will resist bending at the tip but aid bending at more proximal locations. Thickening (or thinning) can also occur in other locations along the mandrel. Control of the direction of bending can be accomplished by making the mandrel more round. i.e., closer to having 1:1 diameter ratios; flatter in different sections of the mandrel; or by varying the absolute dimensions (increasing or decreasing the diameter). Such control over flexibility allows instruments to be designed that minimize bending in some desired locations (such as the location of connector of an electrical element to avoid disruption of the connection) while encouraging bending in other locations (e.g., between sensitive functional elements). In this manner, a catheter that is uniformly flexible along its entire length, is variably flexibility along its entire length, or

has alternating more flexible and less flexible segment(s), is readily obtained simply by manufacturing the guide mandrel with appropriate thickness at different distances and in different orientations along the length of the mandrel. Such a catheter will have two or more different radii of curvature in different segments of the catheter under the same bending force.

[0084] In some preferred embodiments, the most distal 3 to 40 mm of a guide mandrel is thinner relative to central portions of the intradiscal section to provide greater flexibility, with the proximal 10 to 40 mm of the intradiscal section being thicker and less flexible to add column strength and facilitate navigation.

[0085] The actual dimensions of the guide mandrel will vary with the stiffness and tensile strength of the material used to form the mandrel. In most cases the mandrel will be formed from a metal (elemental or an alloy) or plastic that will be selected so that the resulting catheter will have characteristics of stiffness and bending that fall within the stated limits. Additional examples of ways to vary the stiffness and tensile strength include transverse breaks in a material, advance of the material so that it "doubles up," additional layers of the same or different material, tensioning or relaxing tension on the catheter, and applying electricity to a memory metal.

[0086] As illustrated in **FIG. 5**(*b*), in some embodiments of an apparatus of the invention, guiding mandrel is combined with at least a portion of the catheter **14** to form a structure which provides the functions of both, a wall/mandrel **41**. In this figure, the wall/mandrel **41** of catheter **14** can be varied in dimensions as described in the previous section of this specification directed to a separate mandrel, with the same resulting changes in function. For example, changing the thickness of the wall/mandrel **41** that functions as the mandrel portion change, the flexibility and preferred direction of bending of the catheter. In many cases, the wall/mandrel **41** will be thinner than other portions of the catheter wall **33** so that wall/mandrel **41** controls bending. Alternatively, wall/mandrel **41** can be formed of a different material than the other portions **33** of the catheter walls (i.e., one with a lower tensile and/or flexural strength) in order to facilitate bending.

[0087] Returning now to **FIG. 5**(*a*), the guiding mandrel **32** is generally located in the interior of catheter **14**, where it shares space with other functional elements of the catheter. For example and as shown in **FIG. 5**(*a*), thermal energy delivery device lumen **34** can receive any of a variety of different couplings from an energy source **20** to a thermal energy delivery device (functional element) further along the catheter, including but not limited to a wire or other connector between thermal energy elements. Alternatively or concurrently, hollow lumen(s) **36** for delivery or removal of a fluid or solid connectors for application of a force to a mechanical element can be present, so no limitation should be placed on the types of energy, force, or material transporting elements present in the catheter. These are merely some of the possible alternative functional elements that can be included in the intradiscal portion of the catheter. Accordingly, a general description will now be given of some of the possible functional elements.

[0088] To repair tears or fissures in a disc by operation of the instrument at the tear location adjacent to or inside the disc, and to repair herniations and bulges, a functional element is provided in or on the catheter to carry out that purpose.

[0089] Non-limiting examples of functional elements include any element capable of aiding diagnosis, delivering energy, or delivering or removing a material from a location adjacent the element's location in the catheter, such as an opening in the catheter for delivery of a fluid (e.g., dissolved collagen to seal the fissure) or for suction, a thermal energy delivery device (heat source), a mechanical grasping tool for removing or depositing a solid, a cutting tool (which includes all similar operations, such as puncturing), a sensor for measurement of a function (such as electrical resistance, temperature, or mechanical strength), or a functional element having a combination of these functions.

[0090] The functional element can be at varied locations in the intradiscal portion of the catheter, depending on its intended use. Multiple functional elements can be present such as multiple functional elements of different types (e.g., a heat source and a temperature sensor) or multiple functional elements of the same type (e.g., multiple heat sources spaced along the intradiscal portion).

[0091] One of the possible functional elements present on intradiscal section **16** is a thermal energy delivery device **18** having a length, e.g., of about 5 cm. A variety of different types of thermal energy can be delivered including but not limited to resistive heat, radiofrequency (RF), coherent and incoherent light, microwave, ultrasound and liquid thermal jet energies. In one embodiment, thermal energy delivery device **18** is positioned proximal to the distal portion of intradiscal section **16** so that there is no substantial delivery of energy at the distal portion, which can then perform other functions without being constrained by being required to provide energy (or resist the resulting heat).

[0092] Some embodiments have an interior infusion lumen **36**. Infusion lumen **36** is configured to transport a variety of different media including but not limited to electrolytic solutions (such as normal saline), contrast media (such as Conray meglumine iothalamate), pharmaceutical agents, disinfectants, filling or binding materials such as collagens or cements, chemonucleolytic agents and the like, from a reservoir exterior to the patient to a desired location within the interior of a disc (i.e., the fissure). Further, infusion lumen **36** can be used as an aspiration lumen to remove nucleus material or excess liquid or gas (naturally present, present as the result of a liquefying operation, or present because of prior introduction) from the interior of a disc. When used to transport a fluid for irrigation of the location within the disc, the infusion lumen is sometimes referred to as an irrigation lumen. Infusion lumen **36** can be coupled to a medium reservoir through the catheter.

[0093] Included in the particular embodiment shown in this figure is one or more sensor lumens **42**. An example is a wire connecting a thermal sensor at a distal portion of the catheter to control elements attached to a connector in the proximal handle **11** of the catheter.

[0094] Also included in the embodiment shown in **FIG. 5**(*a*) is an optional energy directing device **43** including but not limited to a thermal reflector, an optical reflector, thermal insulator, or electrical insulator. Energy directing device **43** is configured to limit thermal and/or electromagnetic energy

delivery to a selected site of the disc and to leave other sections of the disc substantially unaffected. Energy directing device **43** can be positioned on an exterior surface of catheter intradiscal section **16** and/or catheter **14** as well as in an internal portion of the catheter intradiscal section **16** and/or catheter **14**. For example, the energy can be directed to the walls of the fissure to cauterize granulation tissue and to shrink the collagen component of the annulus, while the nucleus is shielded from excess heat.

[**0095**] In one embodiment, catheter intradiscal section **16** and/or distal portion **28** are positionable to selected site(s) around and/or adjacent to inner wall **22** of annulus fibrosus **122** for the delivery of therapeutic and/or diagnostic agents including but not limited to, electromagnetic energy, electrolytic solutions, contrast media, pharmaceutical agents, disinfectants, collagens, cements, chemonucleolytic agents and thermal energy. Intradiscal section **16** is navigational and can reach the posterior, the posterior lateral, the posterior medial, anterior lateral, and anterior medial regions of the annulus fibrosus and nucleus pulposus, as well as selected section(s) on or adjacent to inner wall **22**.

[**0096**] In a preferred embodiment, intradiscal section **16** is positioned adjacent to the entire posterior wall of the disc. Sufficient thermal energy can then be delivered, for example, to selectively heat the posterior annulus to cauterize granulation tissue and shrink the collagen component of the wall around and adjacent to fissure **44** without undue damage to other portions of the intervertebral disc, particularly the nucleus. These actions help close the fissure in the annulus.

[**0097**] In the preferred embodiment of **FIG. 5**(*a*), markings **38** are visible on the portion of the catheter that is located during normal operation outside the body being acted upon, particularly for embodiments in which the proximal end of the catheter is designed to be directly manipulated by the hand of the physician. Advancement of the catheter into the introducer will advance the markings into the introducer. thereby showing how far the catheter has been advanced into the nucleus. Such a visible marking **38** can be positioned on an exterior surface of the catheter or can be present on an interior surface and visible through a transparent outer covering or sheath. Preferred are visible markings every centimeter to aid the physician in estimating the catheter tip advancement.

[**0098**] If desired, visible markings can also be used to show twisting motions of the catheter to indicate the orientation of the bending plane of the distal portion of the catheter. It is preferred, however, to indicate the distal bending plane by the shape and feel of the proximal end of the catheter assembly. The catheter can be attached to or shaped into a handle **11** that fits the hand of the physician and also indicates the orientation of the distal bending plane. Both the markings and the handle shape thus act as control elements to provide control over the orientation of the bending plane; other control elements, such as plungers or buttons that act on mechanical, hydrostatic, electrical, or other types of controls, can be present in more complex embodiments of the invention.

[**0099**] Additionally, a radiographically opaque marking device can be included in the distal portion of the catheter (such as in the tip or at spaced locations throughout the intradiscal portion) so that advancement and positioning of the intradiscal section can be directly observed by radiographic imaging. Such radiographically opaque markings are preferred when the intradiscal section is not clearly visible by radiographic imaging, such as when the majority of the catheter is made of plastic instead of metal. A radiographically opaque marking can be any of the known (or newly discovered) materials or devices with significant opacity. Examples include but are not limited to a steel mandrel sufficiently thick to be visible on fluoroscopy, a tantalum/polyurethane tip, a gold-plated tip, bands of platinum, stainless steel or gold, soldered spots of gold and polymeric materials with radiographically opaque filler such as barium sulfate. A resistive heating element or an RF electrode(s) may provide sufficient radio-opacity in some embodiments to serve as a marking device

[**0100**] A sheath **40** can optionally be positioned around catheter **14**. Sheath **40** provides a flexible surface that is smooth and provides for easy introduction into a selected area within the disc. Sheath **40** can be made of a variety of different materials including but not limited to polyester, rayon, polyimide, polyurethane, polyethylene, polyamide and silicone. When visible markings are present to indicate the advancement of the catheter, either the sheath carries the markings, or the sheath is clear to reveal markings underneath.

[**0101**] In one preferred embodiment, thermal energy delivery device **18** is a resistive heating device. As illustrated in **FIG. 6 a** heating coil **46** is positioned around an exterior of catheter **14**. The heating element **46** need not be in the shape of a coil. For instance, the heating element can be in the form of a thin flexible circuit which is mountable on or in substantially one side of the intradiscal portion of the catheter. Heating element **46** is powered by a direct current source **20** (and less preferably a source of alternating current). Heating element is made of a material that acts as a resistor. Suitable materials include but are not limited to stainless steel, nickel/chrome alloys, platinum, and the like.

[**0102**] Preferably, the heating element is inside the intradiscal section of catheter **14** (**FIG. 8**). The resistive material is electrically insulated and substantially no current escapes into the body. With increasing levels of current, element **46** heats to greater temperature levels. Additionally, a circuit can be completed substantially entirely at intradiscal section **16** and a controllable delivery of thermal energy is achieved. In one embodiment, 2 watts pass through heating element **46** to produce a temperature of about 55.degree. C. in a selected target such as fissure **44**, 3 watts produces 65.degree. C., 4 watts produces 75.degree.C. and so on.

[**0103**] In another embodiment, thermal energy delivery device **18** is a radiofrequency electrode, such as a band or coil. As illustrated in **FIG. 6**, RF electrode **46** is positioned on an exterior of catheter **14**. RF electrode **46** is powered by an RF generator. The electrode is made of suitable materials including but not limited to stainless steel or platinum. The RF electrode is located on intradiscal section of catheter **14**. Increasing levels of current conducted into disc tissue heat that tissue to greater temperature levels. A circuit can be completed substantially entirely at intradiscal section **16** (bipolar device) or by use of a second electrode attached to another portion of the patient's body (monopolar device). In either case, a controllable delivery of RF energy is achieved.

[0104] In another embodiment sufficient energy is delivered to the intervertebral disc to heat and shrink the collagen component of the annulus but not ablate tissue adjacent to catheter **14**.

[0105] With a resistive heating device, the amount of thermal energy delivered to the tissue is a function of (i) the amount of current passing through heating element **46**, (ii) the length, shape, and/or size of heating element **46**, (iii) the resistive properties of heating element **46**, (iv) the gauge of heating element **46**, and (v) the use of cooling fluid to control temperature. All of these factors can be varied individually or in combination to provide the desired level of heat. Power supply **20** associated with heating element **46** may he battery based. Catheter **14** can be sterilized and may be disposable.

[0106] Referring now to **FIG. 7, a** thermal sensor **48** may be positioned in an interior location of catheter **14**. In another embodiment, thermal sensor **48** is positioned on an exterior surface of catheter **14**. A thermal sensor can be used to control the delivery of energy to thermal energy delivery device **18** (**FIG. 12**). A potting material can be used to fix the position of thermal sensor **48** and provide a larger area from which to average the measured temperature. Thermal sensor **48** is of conventional design, including but not limited to a thermistor; T type thermocouple with a copper constant an junction; J type, E type, and K type thermocouples; fiber optics; resistive wires; IR detectors; and the like. Optionally, there may be a lumen **42** (**FIG. 5**(*a*)) for the thermal sensor connection.

[0107] As illustrated in **FIG. 8, a** sheath **40** may be used to cover resistive heating element **46**. A plurality of resistive heating elements **46** can be used (**FIG. 9**) in a catheter of the invention.

[0108] Referring now to the embodiment shown in **FIG. 10**, thermal energy delivery device **18** (**FIG. 12**) includes one or more resistive heating elements **46** coupled to a resistive heating energy source. Resistive heating elements **46** are positioned along intradiscal section **16** (**FIG. 4**) at locations where they controllably deliver thermal energy to selected structures, including granulation tissue in a fissure **44** (**FIG. 4**) and the annulus surrounding the fissure. Resistive heating elements **46** can be segmented and multiplexed so that only certain resistive heating elements, or combinations of resistive heating elements are activated at any one particular time. Thermal sensor **48** can be positioned between resistive heating elements **46** and/or at an exterior or interior location of catheter **14** (**FIG. 4**). In the embodiment illustrated in **FIG. 10**, catheter **14** can be prepared with a wound helical structural element **49** to increase flexibility and minimize kinking. However, other structures and geometries are suitable for catheter **14**, including but not limited to a substantially smooth surface (and specifically including the devices using an internal guide mandrel as previously described). For example, a sheath can be provided over the heating element, and the guiding mandrel inside the coil can be encapsulated in silicone potting material. The tubing flexibility and the silicone potting material prevent kinking. Additionally, sheath **40** can be positioned around catheter **14** and also around resistive heating elements **46** to afford a substantially smooth surface. Resistive heating element **46** can be at least partially covered by a thermally insulating material, for example, along one side of the catheter, to selectively heat disc tissue on the opposite side.

[0109] Referring now to **FIGS. 11 and 12**, an open or closed loop feedback system **52** couples sensors **48** to energy source **20**. As illustrated in **FIG. 10**, thermal energy delivery device **18** is a resistive heating element **46**. It will be appreciated that the embodiments illustrated in **FIGS. 10 and 11** are readily adaptable to other thermal energy delivery sources (e.g., for radiofrequency energy, the resistive heating element is replaced with insulated RF probe(s) and the energy source is an RF generator).

[0110] The temperature of the tissue or of element **46** (**FIG. 10**) is monitored by sensors **48**, and the output power of energy source **20** adjusted accordingly. The physician can, if desired, override control system **52**. A microprocessor can be included and incorporated in the closed or open loop system to switch power on and off, as well as to modulate the power. The closed loop system utilizes a microprocessor to serve as a controller **54** which acts to monitor the temperature and adjust the power accordingly. Alternatives to the microprocessor are, for example, analog control circuitry and a logic controller.

[0111] With the use of sensors **48** and feedback control system **52**, a tissue adjacent to resistive heating elements **46** can be maintained at a desired temperature for a selected period of time without aberrant high temperature fluctuations. Each resistive heating element **46** can be connected to separate control and power supply resources, which generate an independent output for each resistive heating element **46**. For example, a desired thermal output can be achieved by maintaining a selected energy at resistive heating elements **46** for a selected length of time.

[0112] When a resistive heating element **46** is used, current delivered through resistive heating element **46** can be measured by current sensor **56**. Voltage can be measured by voltage sensor **58**. Resistance and power are then calculated at power calculation device **60**. These values can then be displayed at user interface and display **62**. Signals representative of power and resistance values are received by a controller **54**.

[0113] A control signal is generated by controller **54** that is related to the current and voltages. The control signal is used by power circuits **66** to adjust the power output in an appropriate amount in order to maintain the desired power delivered at respective resistive heating elements **46**.

[0114] In a similar manner, temperatures detected at sensors **48** provide feedback for maintaining a selected power. The actual temperatures are measured at temperature measurement device **68**, and the temperatures are displayed at user interface and display **62**. A control signal is generated by controller **54** that is related to the actually measured temperature and a desired temperature. The control signal is used by power circuits **66** to adjust the power output in an appropriate amount in order to maintain the desired temperature delivered at the respective sensor **48**. A multiplexer can be included to measure current, voltage, and temperature at the sensors **48**, **56** and **58**, so that appropriate energy can be delivered to resistive heating elements **46**.

[0115] Controller **54** can be a digital or analog controller or a computer with software. When controller **54** is a computer, it can include a CPU coupled through a system bus. Included in this system can be a keyboard, a disc drive or other non-volatile memory system, a display, and other

peripherals, as are known in the art. Also coupled to the bus can be a program memory and a data memory.

[0116] User interface and display **62** includes operator controls and a display. Controller **54** can be coupled to imaging systems well known in the art.

[0117] The output of current sensor **56** and voltage sensor **58** is used by controller **54** to maintain a selected power level at resistive heating elements **46**. A predetermined profile of power delivered can be incorporated in controller **54**, and a preset amount of energy to be delivered can also be profiled.

[0118] Circuitry, software, and feedback to controller **54** result in process control and in the maintenance of the selected power that is independent of changes in voltage or current. Control can include (i) the selected power and (ii) the duty cycle (wattage and on-off times). These process variables are controlled and varied while maintaining the desired delivery of power independent of changes in voltage or current, based on temperatures monitored at sensors **48**.

[0119] In the embodiment shown, current sensor **56** and voltage sensor **58** are connected to the input of an analog amplifier **70**. Analog amplifier **70** can be a conventional differential amplifier circuit for use with sensors **48**, **56** and **58**. The output of analog amplifier **70** is sequentially connected by an analog multiplexer **72** to the input of A/D converter **74**. The output of analog amplifier **70** is a voltage which represents the respective sensed parameters. Digitized amplifier output voltages are supplied by A/D converter **74** to microprocessor **54**. Microprocessor **54** may be a type 68HCII available from Motorola. However, it will be appreciated that any suitable microprocessor or general purpose digital or analog computer can be used to the parameters of temperature, voltage or current.

[0120] Microprocessor **54** sequentially receives and stores digital representations of temperature. Each digital value received by microprocessor **54** corresponds to different parameters.

[0121] Calculated power and temperature values can be indicated on user interface and display **62**. Alternatively, or in addition to the numerical indication of power, calculated power values can be compared by microprocessor **54** with power limits. When the values exceed predetermined power or temperature values, a warning can be given on user interface and display **62**, and additionally, the delivery of electromagnetic energy can be reduced, modified or interrupted. A control signal from microprocessor **54** can modify the power level supplied by energy source **20**.

[0122] In preferred embodiment of the invention, the materials that make up the various parts of an apparatus of the invention have the following characteristics:

Component	Tensile Strength in MPa	% Elongation	Conductivity cal/cm^2/cm/sec/° C.	Resistivity nΩ * m	Melt temp. ° C.	Geometry (height, width, and/or dia.) in mm
Mandrel	600–2000	5–100	N/A	N/A	N/A	height 0.2–2.3 width 0.05–0.5
Heating Element	300 min.	20 (min.)	.025–0.2	500–1500*	N/A	0.5—0.5 dia.
Conductor wire	N/A	N/A	2–1.0	150 max.*	N/A	0.1–0.5 dia.
Plastic sheath	N/A	25 (min.)	N/A	N/A	80° (min.)	0.05–0.2 thickness

[0123] Another preferred characteristic is that the minimum ratio of heating element resistivity to conductor wire resistivity is 6:1; the preferred minimum ratio of guiding mandrel height to guiding mandrel width is 2:1. Tensile strength and % elongation can be measured according to ASTME8 (tension test of metallic materials). Conductivity and resistivity can be determined by procedures to be found in ASTM Vol. 2.03 for electrothermal properties.

[0124] A particularly preferred embodiment of a catheter of the invention can be prepared using a covering sheath of polyimide with an outside diameter of 1 mm and a wall thickness of 0.05 mm. Such a sheath provides a significant fraction of the stiffness and torsional strength appropriate for the catheter. Internal to the polyimide sheath and in the intradiscal section of the catheter is a heating coil of insulated nickel/chromium wire that has an outside diameter that matches the interior diameter of the polyimide sheath. This heating coil provides both heat and additional stiffness to the assembly. Also internal to the polyimide sheath on each side of the coil (longitudinally) is a 0.1 mm-walled, 304 stainless-steel, metallic band whose outer diameter matches the inner diameter of the sheath, the distal band having a hemispherical end that exits the end of the polyimide sheath and creates a blunt tip **29** (**FIG. 3**(*a*)) at the end of the catheter. These bands provide enhanced radio-opacity for fluoroscopic visualization, as well as some of the stiffness of the assembled apparatus. Proximal to the proximal metallic band and internal to the sheath is an additional polyimide tube **47** (**FIG. 5**(*a*)) that increases the stiffness of the catheter in the region that transitions from the intradiscal section containing the coil to the rigid proximal section. Proximal to the second polyimide tube and internal to the sheath is a 304 stainless steel (fully hard) hypodermic tube with an outside diameter matching the inside diameter of the polyimide sheath and a wall thickness of 0.1 mm. This combination provides the rigidity needed for a physician to advance the

distal portion of the device inside a nucleus pulposus and provides tactile force feedback from the tip to the physician.

[0125] In some embodiments, inside the bands, coil, hypodermic tube, and both the polyimide sheath and internal polyimide tube is a guiding mandrel that extends from a proximal handle to tip. In one embodiment, this mandrel is 0.15 mm by 0.5 mm and formed from 304 stainless steel. In another embodiment, it is a 0.3 mm diameter 304 stainless steel wire, with the distal 2.5 cm flattened to 0.2 mm by 0.5 mm.

[0126] Inside the center of the heating coil is a T-type thermocouple potted with cyanoacrylate adhesive into a polyimide sheath and located alongside the mandrel. The thermocouple wire travels through the coil and hypodermic tube to the handle at the proximal end of the apparatus. Two copper conductor wires (36 gauge-insulated with polyimide) are soldered to the heating coil and pass through the hypodermic tube and handle to the proximal handle's electrical connector, which allows a power supply and feedback controls to be connected to electrical elements in the catheter. One embodiment has the handle fitted with a 1-3 meter cable extension ending in an electrical connector to eliminate the need for a connector in the handle. This design reduces weight (from connector elements) on the proximal end and increases the physician's tactile feedback during device manipulation.

[0127] The entire inside of the catheter in one embodiment is encapsulated with a silicone material which removes air (which would insulate the heat created by the heating coil) and helps support the polyimide sheath to prevent collapse (i.e., increases stiffness). Instead of the silicone, another embodiment uses an epoxy which remains flexible after curing. Strain relief is provided between the catheter body and the handle with an elastomeric boot. The distal end of the catheter is pre-bent 15-30° off the longitudinal axis of the catheter at about 5-10 mm from the distal tip.

[0128] The catheter in one embodiment carries visible markings **38** (**FIG. 5**(*a*)) on the hypodermic tube (with the markings being visible through the polyimide sheath) to indicate distance of insertion of the catheter into an introducer and/or distance that the distal end of the catheter extends out of the introducer into a disc. The catheter is also marked both visually and with tactile relief on its handle to indicate the direction of bending of the pre-bent tip and biased stiffness.

[0129] The guidable apparatus described herein can be used in any of a number of methods to treat annular fissures, herniations, and bulges. Specific methods that can be carried out with an apparatus of the invention will now be described.

[0130] Discs with fissures can be treated non-destructively with or without the removal of nucleus tissue other than limited desiccation of the nucleus pulposus which reduces its water content. Fissures can also be ameliorated by shrinking the collagen component of the surrounding annulus to bring the sides closer to their normal position. Thermal shrinkage of collagen also facilitates ingrowth of collagen which increases annular stiffness. Fissures can also be repaired with sealants such as a filler (non-adhesive material that blocks the opening) and/or bonding material (adhesives or cements) which help seal the tear. The fissure can also be treated with global heating of the disc. Most of the heat will be directed toward the fissure, but the remainder of the disc will also receive some heat.

[0131] In some methods of the invention, bonding materials such as collagen, albumin, and a mixture of fibrinogen and thrombin are delivered to the fissure. Collagen from a variety of sources can be used (e.g., bovine extracted collagen from Semex Medical, Frazer Pa., or human recombinant collagen from Collagen Corp., Palo Alto, Calif.). The collagen is injected dissolved or as a fine slurry, after which it gradually thickens (or may be heated) in the fissure, where the injected collagen provides a matrix for collagen disposition by the body.

[0132] A variety of different materials can also be delivered to the fissure, including but not limited to electrolyte solutions (i.e. normal saline), contrast media (e.g., Conray meglumine iothalamate), pharmaceutical agents (such as the steroid methylprednisolone sodium succinate available from Pharmacia & Upjohn. Kalamazoo, Mich., and nonsteroidal anti-inflammatory drugs), chemonucleolytic enzyme (e.g., chymopapain), hydrogel (such as disclosed in U.S. Pat. No. 4,478,822), osteoinductive substances (e.g., BMP, see U.S. Pat. No. 5,364,839), chondrocyte inductive substance (e.g., TGF-.beta.) and the like. The materials are delivered via the catheter and/or introducer to the disc. Preferably, however, when precision placement of the material (as in a fissure) is necessary or desired, the delivery method uses the apparatus described above, especially when delivery to the posterior, posterior lateral, or posterior medial region of the disc is desired. The materials may be administered simultaneously or sequentially, such as beginning with an electrolytic solution (which helps the physician view the pathology) and following with products to seal a fissure.

[0133] The materials are delivered in an amount sufficient to decrease the extent of the fissure at least partially, preferably to fill the fissure completely. The delivered material can be fixed in position with an adhesive, with a hydrogel that is liquid at room temperature gels at body temperature, with naturally occurring processes (such as interaction of fibrinogen and thrombin) within the disc, or by heating the disc as described in more detail below.

[0134] To seal a fissure, a combination of thrombin and fibrinogen is injected at the fissure, after which it coagulates and forms a seal over the fissure. A kit with appropriate syringes and other equipment is available from Micromedics, Inc., Eagan, Minn. Frozen fibrinogen solution is thawed in its plastic bag and then dispensed to a small med cup. Thrombin is reconstituted with sterile water in the "slow gel" concentration (100 units/ml) for tissue bonding. For example, 100 ml is added to a vial containing 10,000 units. Thrombin solution is withdrawn from the vial and dispensed to a second med cup. The two syringes are filled equally, one with each solution. Then the syringe tips are each twisted into an applicator that mixes the solutions before passing them to an administration tube. The syringes are fitted into the dual syringe holder and the plunger link, which helps the practitioner administer equal amounts of thrombin and fibrinogen. Then the practitioner connects the administration tube to the proximal end of the inventive catheter, depresses the plungers and dispenses the sealant solution to the fissure. The thrombin and fibrinogen react and form a natural seal over the fissure.

[0135] Chymopapain can be injected through the subject catheter, particularly near a herniation of the disc. Chymopapain splits side chains off proteoglycan molecules, thereby

decreasing their ability to hold water and their volume. The disc gradually loses water and decreases in size. A typical dose is 0.75 to 1.0 ml (2000 pKat/ml).

[0136] In some embodiments, thermal energy is delivered to a selected section of the disc in an amount that does not create a destructive lesion to the disc, other than at most a change in the water content of the nucleus pulposus. In one embodiment there is no removal and/or vaporization of disc material positioned adjacent to an energy delivery device positioned in a nucleus pulposus. Sufficient thermal energy is delivered to the disc to change its biochemical and/or biomechanical properties without structural degradation of tissue.

[0137] Thermal energy is used to cauterize granulation tissue which is pain sensitive and forms in a long-standing tear or fissure. Additionally or alternatively, thermal energy is used to seal at least a part of the fissure. To do that, the disc material adjacent to the fissure is typically heated to a temperature in the range of 45-70.degree. C. which is sufficient to shrink and weld collagen. In one method, tissue is heated to a temperature of at least 50.degree. C. for times of approximately one, two, three minutes, or longer, as needed to shrink the tissue back into place.

[0138] Delivery of thermal energy to the nucleus pulposus removes some water and permits the nucleus pulposus to shrink. This reduces a "pushing out" effect that may have contributed to the fissure. Reducing the pressure in the disc and repairing the fissure may help stabilize the spine and reduce pain.

[0139] Global heating of the disc also can be used to cauterize the granulation tissue and seal the fissure. In this embodiment of the method, the heating element is positioned away from the annulus but energy radiates to the annulus to raise the temperature of the tissue around the fissure. This global heating method can help seal a large area or multiple fissures simultaneously.

[0140] Referring to **FIG. 13, a** decompression catheter **200** for treating bulging or contained herniated discs, e.g., associated with radicular pain, is a steerable device that is introduced into the disc through, e.g., a 17 gauge introducer needle **201** placed using standard fluoroscopic techniques. Needle placement of this type is routinely performed by spine pain management physicians. This enables the procedure to be an outpatient procedure performed by interventionalists in a procedure room setting. The decompression catheter includes depth markers (not shown) that aid in proper introduction of the catheter through the introducer needle. The decompression catheter is inserted into the nucleus pulposus **202** of the disc **204** on the contralateral side form the target tissue, and then steered to the site of the bulge **206** by advancing and twisting the steerable catheter **200**, following its progress using fluoroscopy. The decompression catheter includes radiopaque markers **290** and **266** **(FIG. 15)** that help localize the position of the catheter within the disc.

[0141] After the decompression catheter is advanced to the site of the bulge, energy is delivered to the site of bulge via the catheter from a radiofrequency generator (not shown). The radiofrequency is delivered in the form of resistive heat generated within a heating coil **259** **(FIG. 15)** inside the catheter (though other functional elements as described above can be employed). The temperature at the tip of the catheter is monitored by a thermocouple **284** **(FIG. 15)** housed within the catheter. The generator uses feedback from the thermocouple to control the temperature to a desired level inside the disc. Starting from an initial temperature of 50° C., the temperature is ramped up, e.g., every 30 to 60 seconds at 5 degree intervals to a temperature of 90° C., which is held, e.g., about 6 minutes. The total treatment time is about 13 minutes.

[0142] By placing the resistive heating coil at the site of the bulge and delivering sufficient energy to heat the disc material to a temperature adequate to shrink collagen tissue of the nucleus pulposus and reduce nuclear volume, the catheter allows for decompression of the bulge at the site of pathology. The catheter also acts to denervate nerve fibers in the outer annulus. Referring to **FIG. 14**, decompression catheter **200** includes a handle **250** from which a cable (not shown) extends for connection to the radiofrequency generator, a torque tube **252**, and a flexible distal section **254**. Torque tube **252** is formed, e.g., of a stainless steel tube with an outer diameter of 0.045 inches and a wall thickness of 0.0025 inches to provide adequate hoop strength such that a torque applied at handle **250** is transmitted by torque tube **252** to distal section **254**. Torque tube **252** has a length, L_1, extending from handle **250** of, e.g., about 6.6 inches, and distal section **254** has a length, L_2, of, e.g., about 4.9 inches.

[0143] Referring also to **FIGS. 15 and 16**, distal section **254** includes an outer, flexible tube **256** attached to torque tube **252** by a bonding agent, e.g., epoxy. Flexible tube **256** is, e.g., a braided polymeric material such as a polyimide tube with an embedded stainless steel braid. The tube has an outer diameter of 0.038 inches, a wall thickness of 0.0035 inches, and defines a lumen **258** having a diameter of 0.031 inches. The stainless steel braid is, e.g., a flat wire having dimensions of 0.0025" wide by 0.0005 inches thick. The flexibility of distal section **254** is selected such that the applied force needed to advance the catheter through the nucleus pulposus and along the inner wall of the disc is less than the force that would puncture the annulus fibrosus of the disc. The braided sleeve enhances steerability and provides for a more rugged catheter that avoids the possibility of damage to the catheter during insertion and removal through the introducer needle. The stainless steel braiding acts as an armour to help prevent cutting or shearing of the outside of the tube. The bonding agent enhances torque and steerability of catheter **200** and avoids rippling of the catheter surface, enhancing the insertion and removal of the catheter through the introducer and inside the disc.

[0144] Within lumen **258** is resistive heating coil **259**, a delivery wire **260** that provides the conduction path from the generator to the heating coil, and a return wire **262** that provides the return conduction path to the generator. Heating coil **259** is, e.g., formed from a polyimide coated 38 gauge wire having an overall diameter of 0.0051 inches. The heating coil has an overall length, 1, of, e.g., about 1.5 cm to limit the effect of the heating to the area of the bulge. Delivery wire **260** is, e.g., an insulated copper wire with a diameter of 0.005 inches. Return wire **262** is, e.g., a solid stainless steel wire having an insulating coating of polyimide and a diameter of 0.011 inches. Delivery wire **260** is connected to coil **259** by, e.g., a lap solder joint, and return

wire **262** is attached to coil **259** by radiopaque band **266**. Band **266** is, e.g., a stainless steel sleeve soldered to coil **259** and return wire **262**.

[**0145**] Located at the distal end **268** of outer tube **256** is an atraumatic tip **270** formed, e.g., of a heat/UV cured polymer such as urethane acrylate. Tip **270** has a reduced diameter hub **272** that abuts band **266**. Hub **272** receives the end **276** of return wire **262**. Located between coil **259** and outer tube **256** is a sleeve **278**, e.g., a polyimide sleeve having an outer diameter of 0.025 inches and a wall thickness of 0.001 inches. The material of tip **270** acts like a glue and is injected into the tip space, effectively potting the space between wire end **276** and sleeve **278**.

[**0146**] Spirally wound about sleeve **278** are a pair of wires **280**, **282**, e.g., 44 gauge wires. Wires **280**, **282** are insulated along their lengths except near the tip where the wires are joined to form a thermocouple **284** for measuring temperature. The position of thermocouple **284** is determined by a sleeve **286**, e.g., a polyimide sleeve having an outer diameter of 0.0294 inches and a wall thickness of 0.0016 inches, that wires **280**, **282** abut. Thermocouple **284** is peripherally located on catheter **200** such that the temperature reading more accurately depicts the temperature of the surrounding tissue and allows for more efficient monitoring of temperature. This allows for more aggressive shrinkage of the nuclear tissue at the site of the bulge.

[**0147**] Radiopaque marker **290**, e.g., a platinum/iridium band, is located at the proximal end **288** of coil **259** and radiopaque band **266** is located at the distal end **289** of the coil to help the user determine the position of coil **259** in use. Proximal of marker **290** is a tube **292**, e.g., a polyimide tube having an outer diameter of 0.021 inches and a wall thickness of 0.002 inches, that keeps marker **290** from sliding proximally and provides structural support.

[**0148**] Referring to **FIG. 17**, prior to being spirally wound, wires **280**, **282** are contained within a cover **294**, e.g., a polyimide tube.

[**0149**] Catheter **200** can include other modifications as described above with reference to FIGS. **3** to **10**. The bending stiffness and column or compressive strength of the distal portion of catheter **200** can be as described above. The activation elements described in U.S. application Ser. No. 09/776,231, supra, can also be incorporated into the various devices described above.

[**0150**] All publications and patent applications mentioned in this specification are herein incorporated by reference in their entirity.

[**0151**] A number of embodiments of the invention have been described. Nevertheless, it will be understood that various modifications may be made without departing from the spirit and scope of the invention. Accordingly, other embodiments are within the scope of the following claims.

What is claimed is:

1. A method of delivering energy to an intervertebral disc, comprising:

positioning an energy delivery device adjacent an inner wall of the disc, and shrinking the nucleus pulposus.

2. The method of claim 1 wherein positioning the energy delivery device further comprises positioning an energy delivery element of the device adjacent a bulge in the intervertebral disc.

3. The method of claim 1 further comprising monitoring temperature.

4. The method of claim 3 further comprising controlling energy delivery based on the monitored temperature.

5. The method of claim 1 further comprising providing a catheter including the energy delivery device.

6. The method of claim 5 further comprising introducing the catheter into the intervertebral disc and advancing the catheter along the inner wall of the disc.

7. A device for delivering energy, comprising:

a catheter including a distal portion configured to be inserted into a patient and to follow a natural boundary of a patient tissue, the distal portion including a braided polymeric material, and

an energy delivery element located at the distal portion for treating tissue.

8. The device of claim 7 wherein the catheter further comprises a proximal portion including a tube for transmitted torque to the distal portion.

9. The device of claim 8 wherein the tube is attached to the braided polymeric material by a bonding agent.

10. The device of claim 7 wherein the energy delivery element comprises a resistive heating coil.

11. The device of claim 10 wherein the coil has a length of about 1.5 cm.

12. The device of claim 7 wherein the braided polymeric material is in the form of a tube defining a lumen.

13. The device of claim 12 wherein the energy delivery element is located within the lumen.

14. The device of claim 12 further comprising a pair of wires located within the lumen.

15. The device of claim 14 further comprising a sleeve around which the pair of wires are spirally wound.

16. The device of claim 14 wherein the wires are joined in the distal portion to form a thermocouple.

17. The device of claim 16 wherein the thermocouple is peripherally located.

18. The device of claim 7 wherein the distal portion includes an atraumatic tip.

19. The device of claim 18 wherein the atraumatic tip is formed of a heat/UV cured polymer.

* * * * *