June 16, 1925.

1,542,116

R. WELCKER

TANK CAR

Filed May 9, 1923

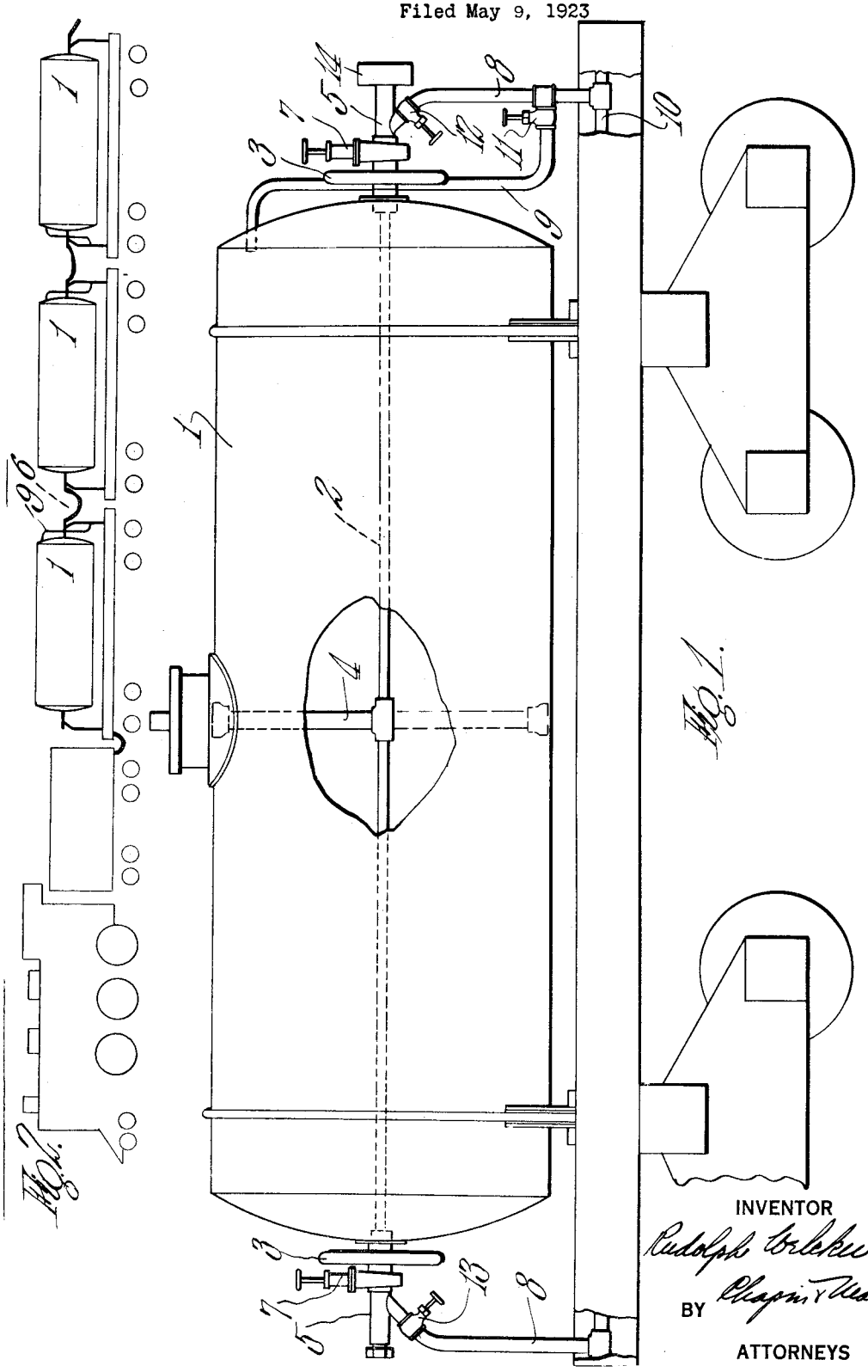

Fig. 1.

INVENTOR

Rudolph Welcker

BY Chapin & Neal

ATTORNEYS

Patented June 16, 1925. 1,542,116

UNITED STATES PATENT OFFICE.

RUDOLPH WELCKER, OF SPRINGFIELD, MASSACHUSETTS.

TANK CAR.

Application filed May 9, 1923. Serial No. 637,910.

To all whom it may concern:

Be it known that I, RUDOLPH WELCKER, a subject of the Queen of Netherlands, residing at Springfield, in the county of Hampden and State of Massachusetts, have invented new and useful Improvements in Tank Cars, of which the following is a specification.

This invention is an improvement in railroad tank cars. According to the principal object of the invention I provide improved means to empty one or a series of tank cars of liquid. I accomplish this object by a piping system suitably connected with a source of air pressure all arranged to force the liquid from the tank and I particularly plan to use the air pressure through the air brake system of the train in which the car is one of a series. This arrangement is useful because it renders unnecessary superfluous piping being added to the cars. A suitable and sufficient source of air under pressure is connected to the train line.

In the drawings:

Fig. 1 is a side view of a single tank car having a portion of the wall cut away to show the interior and with my piping system attached and connected to the air brake system of piping; and

Fig. 2 is a diagrammatic view of a train of such tank cars with the connections indicated sufficiently so that when taken in connection with Fig. 1 a clear idea of the whole system is obtained.

The tank car 1 may be of the ordinary kind used to transport oils or other liquids. Through the car from end to end and preferably along its longitudinal axis I provide a pipe 2. This pipe extends from the ends of the car through suitable stuffing boxes and is provided on the outside with a hand wheel 3 so that the pipe may be turned 180° for example. This movement is desired so that the pipe 4 extending at right angles to pipe 2 out to a position closely adjacent the tank wall may be moved from an upright to a depending position. Such positions of pipe 4 are both shown in Fig. 1 but it should be understood that there is only one pipe intended to occupy the upright position when the train is under way and the depending position when the tank is being unloaded. A flexible end permits the movement of pipe 4 to depending position and to take liquid from the very bottom of the tank.

A pipe union 5 connects to pipe 2 at each end on the outside so that a flexible pipe connection 6 may be made between the several pipes 2 in a train of cars as indicated in Fig. 2. A valve 7 is placed between union 5 and wheel 3 at each end of the car.

The connection to the air line 10 of the train is made at each end of the car by valved pipes 8 leading to the unions 5 but entering said unions in opposite directions at opposite ends of the car. The air from pipe 8 is preferably led into the discharge pipe line at the union 5 with an injector action in the direction of the discharge.

From one of the pipes 8 in each car below the valve in said pipe a pipe 9 with a shut off valve leads to the space in the topmost part of tank 1.

In operation I will assume that the tank of Fig. 1 is to be emptied in a direction toward the left of the figure. The hand wheel 3 is turned to bring pipe 4 from the full to the dotted line position. The right hand end of the union 5 is closed by a suitable device 14. The valves 7, 11 and 12 are opened while valve 13 is closed. A discharge pipe is connected to the left hand union 5.

Air from pressure line 10 of the air brake system is injected into union 5 toward the left hand direction. Air from the same source goes through pipe 9 to the top of the tank and presses the liquid up the depending pipe 4 to meet the air traveling to the left in pipe 2. The liquid and air travel together out of the left hand end of the system until the tank is completely emptied.

Referring to Fig. 2, the tank cars are all shown connected in the train. The adjacent ends of each pair of cars have their couplings 5 connected with flexible connections 6. The train is placed on the track so that the right hand car may have its union 5 connected to the desired discharge pipe. Starting with the left hand car the valve 13 is opened while the valve 12 is closed. Then with the other valves as described in connection with Fig. 1 the left hand car will discharge its contents through the joined piping system including the pipes 2 of the series of cars in the same manner as in the case of a single car. In emptying the sec-

ond and successive cars the hand wheels and valves are turned in the obvious way, but it is desirable to shut off the connections from the air system to each car after it is discharged although this may not be necessary.

I believe with the foregoing description many of the advantages in the transportation of liquid will be clear. One of the chief advantages seems to reside in the fact that a train made up of my improved tank cars is a more convenient self-discharging unit than any train arrangement of which I am aware. It is frequently desirable to discharge the whole train load at one point through one pipe. The cars arranged in my train are piped one to the other and the whole load may be effectively discharged with only the turning of valves and hand wheels which eliminates all other manipulations such as switching cars into place one after the other. The unloading of a single car as well as the series of cars is carried out to advantage as compared to other means of which I am aware.

It should be noted that connected pipes 2 in a series of cars may serve with great convenience in loading all cars in the series with liquid from one supply connected to an end union 5. All that is necessary is to close valves 11, 12 and 13 when loading.

I claim:

1. In a railroad train a plurality of tank cars, each having in combination a discharge pipe connected to the discharge pipes of the other cars, means to apply air pressure to the top of the liquid in each tank and means to apply air pressure directly to the discharging body of liquid in said discharge pipe whereby the liquid in one car may be discharged through the discharge pipe of an adjacent car as well as through its own discharge pipe.

2. A tank car comprising in combination a discharge pipe extending from end to end along its longitudinal axis, a branch pipe leading to a point adjacent the interior wall of the car, means to turn said pipe from the outside to raise or lower the end of said branch pipe, and means to apply air pressure to force the liquid through said discharge pipe.

3. A railroad tank car comprising in combination a discharge pipe leading from the interior of the tank, means connected with the air brake system to lead air under pressure to the interior of the tank to force said liquid through said discharge pipe.

4. A railroad tank car comprising in combination, a discharge pipe extending longitudinally from end to end through the tank, an inlet to said pipe from the interior of the tank, a pipe connecting the air brake system to the top of the tank, a pipe connecting the air brake system to said discharge pipe in a direction to inject the air into said pipe and move the liquid therein in one direction along the pipe to a discharging point.

In testimony whereof I have affixed my signature.

RUDOLPH WELCKER.