May 25, 1965 P. CANALE ETAL 3,184,911

COMBINED MULTIPLE CLOCK AND RADIO

Filed Sept. 4, 1962 5 Sheets-Sheet 1

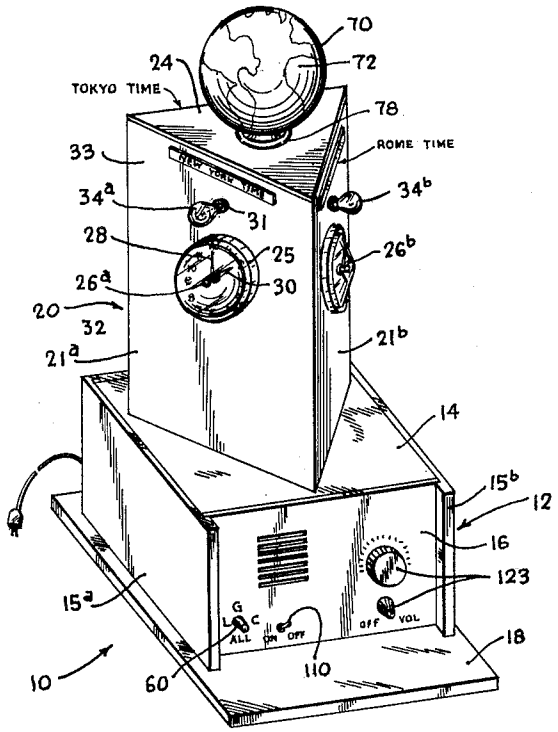


Fig. 1

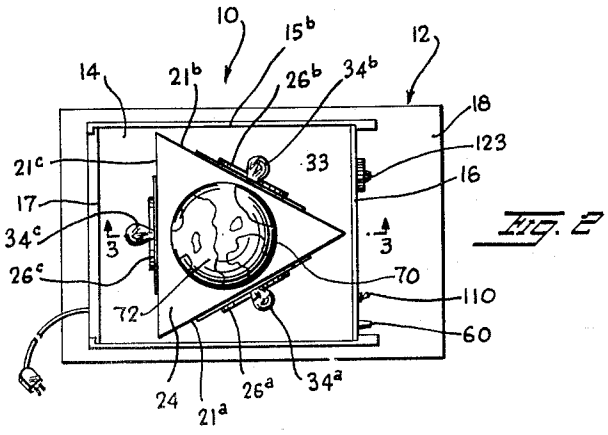


Fig. 2

INVENTORS
PIETRO CANALE
ANTONIO CANALE
BY
Zoltan A. Polachek
ATTORNEY

May 25, 1965 P. CANALE ETAL 3,184,911

COMBINED MULTIPLE CLOCK AND RADIO

Filed Sept. 4, 1962 5 Sheets-Sheet 2

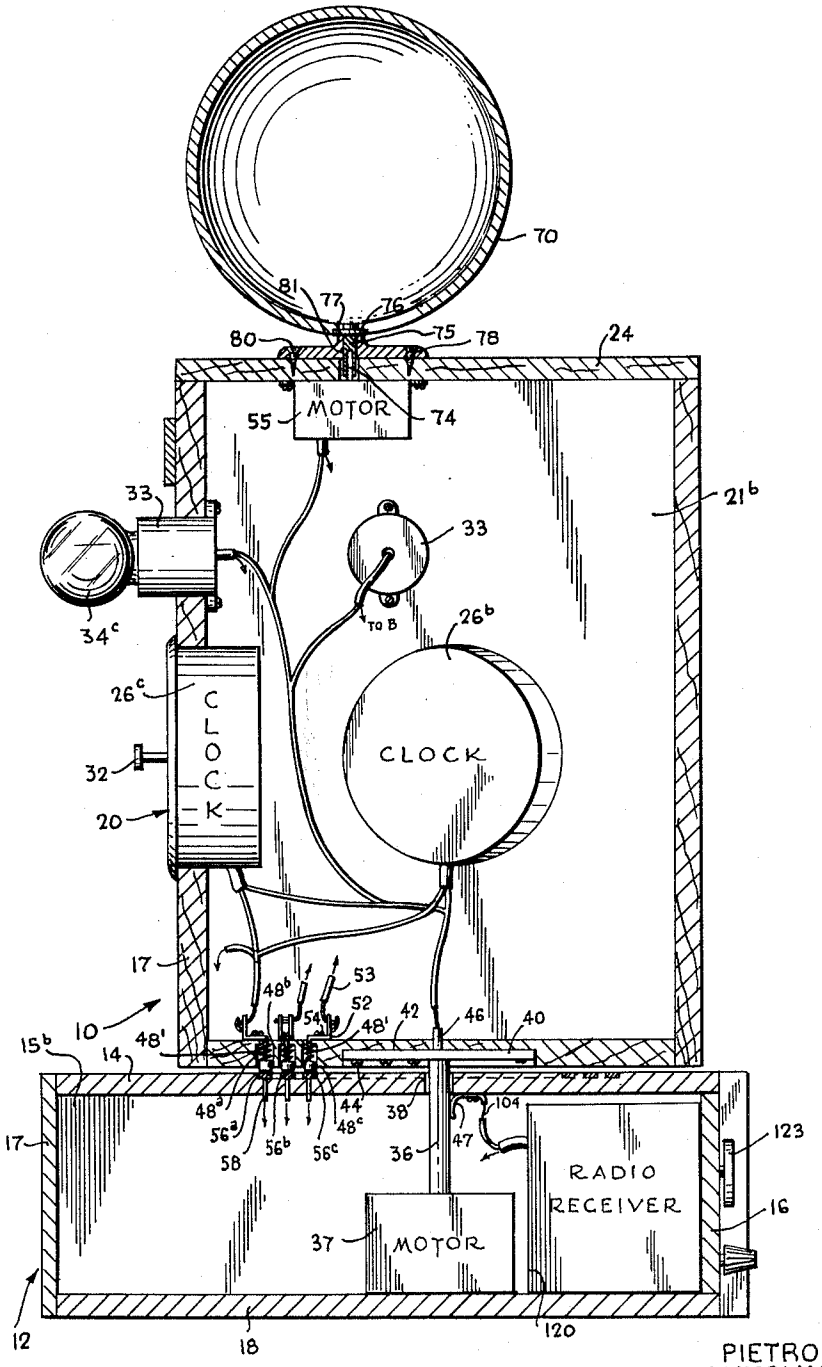


Fig. 3

INVENTORS
PIETRO CANALE
ANTONIO CANALE
BY
Zoltan A. Blaschke
ATTORNEY

May 25, 1965 P. CANALE ETAL 3,184,911

COMBINED MULTIPLE CLOCK AND RADIO

Filed Sept. 4, 1962 5 Sheets-Sheet 3

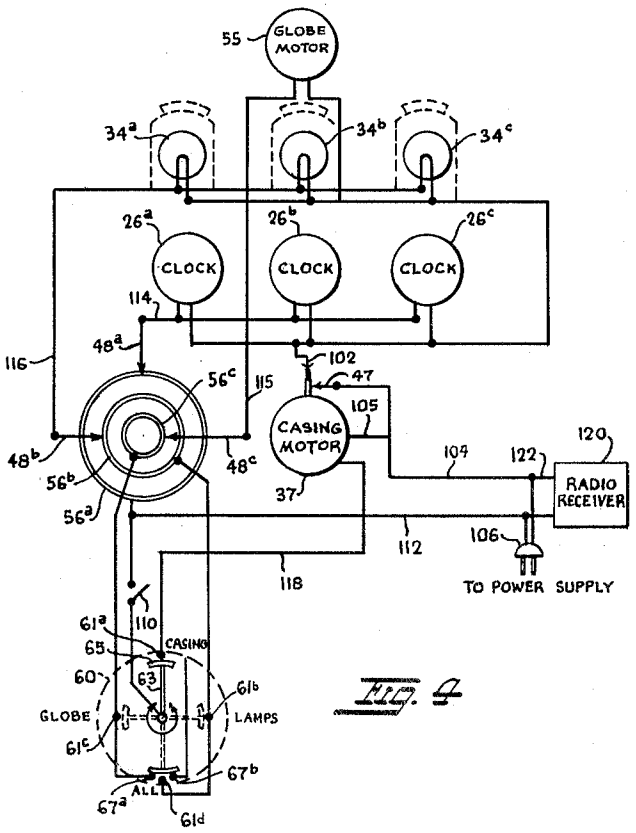


Fig. 4

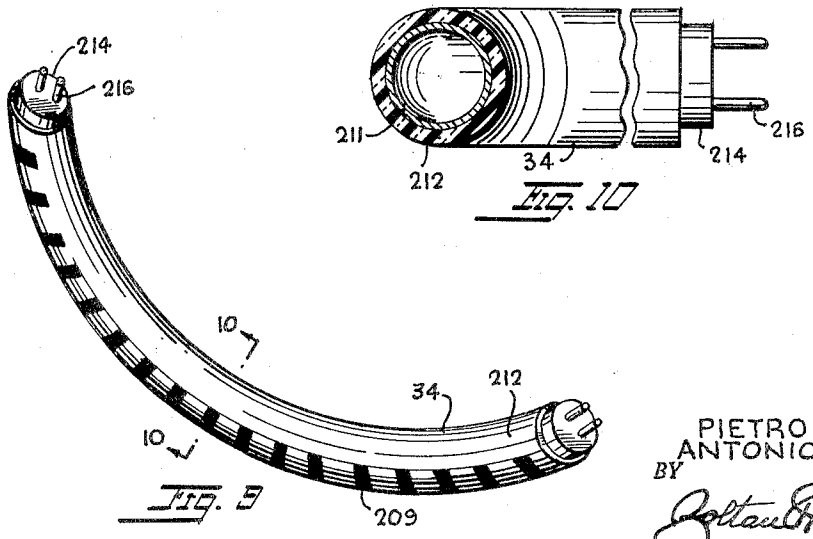


Fig. 9




Fig. 10

INVENTORS
PIETRO CANALE
ANTONIO CANALE
BY
Zoltan A. Blachsky
ATTORNEY

May 25, 1965 P. CANALE ETAL 3,184,911

COMBINED MULTIPLE CLOCK AND RADIO

Filed Sept. 4, 1962 5 Sheets-Sheet 4

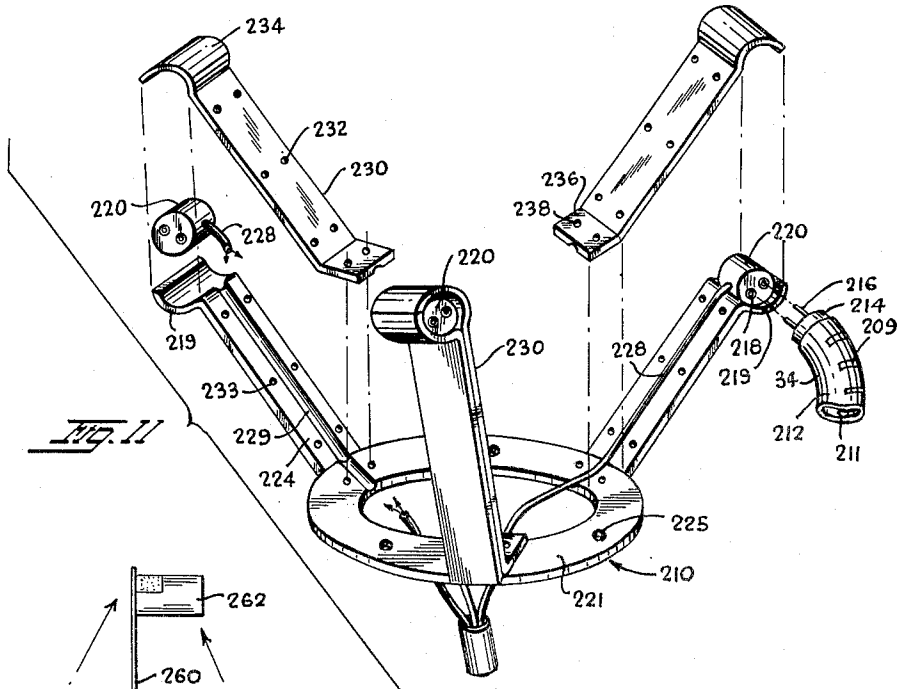


FIG. 11

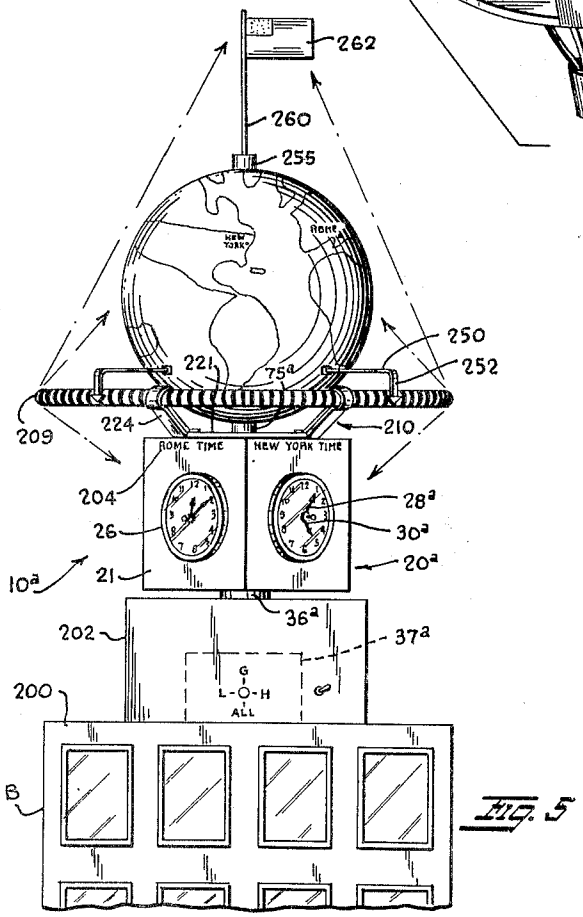


FIG. 5

INVENTORS
PIETRO CANALE
ANTONIO CANALE
BY
ATTORNEY

May 25, 1965 P. CANALE ETAL 3,184,911

COMBINED MULTIPLE CLOCK AND RADIO

Filed Sept. 4, 1962 5 Sheets-Sheet 5

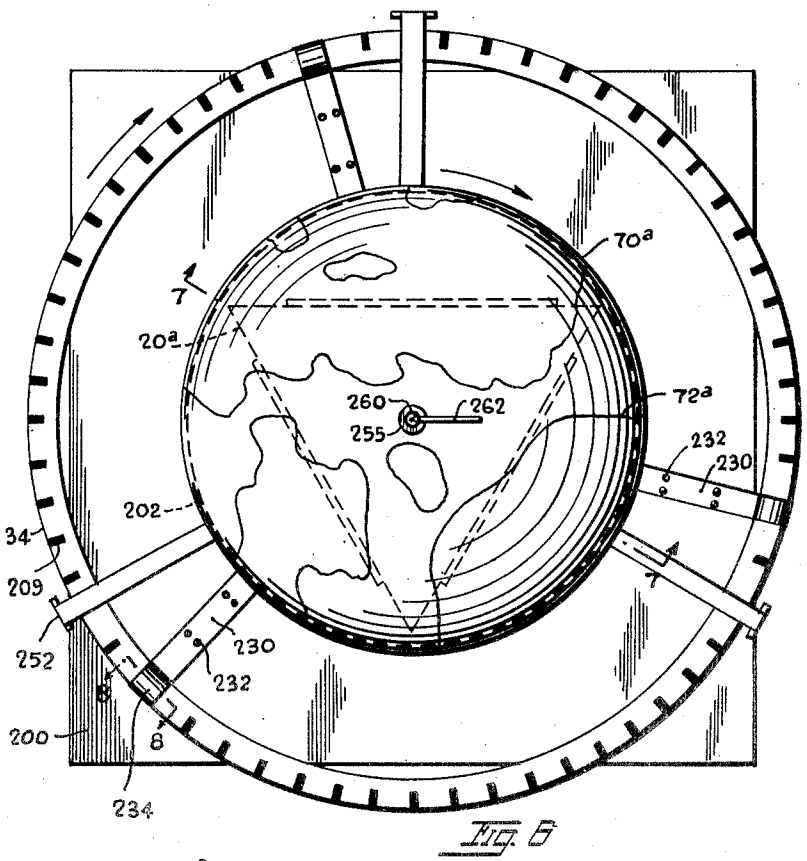


Fig. 6

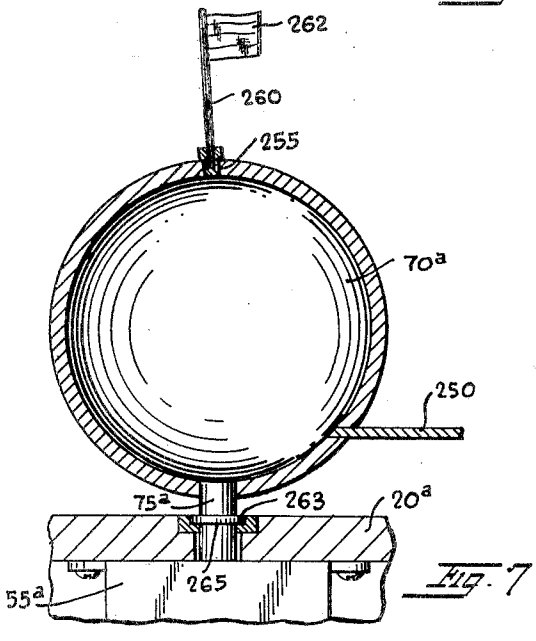


Fig. 7

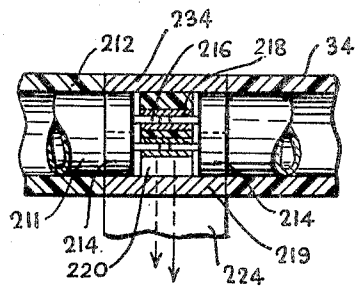


Fig. 8

INVENTORS
PIETRO CANALE
ANTONIO CANALE
BY
ATTORNEY

United States Patent Office 3,184,911 Patented May 25, 1965



3,184,911

# COMBINED MULTIPLE CLOCK AND RADIO

Pietro Canale, 103—39 52nd Ave., and Antonio Canale, 50—39 103rd St., both of Corona, N.Y.

Filed Sept. 4, 1962, Ser. No. 221,285
2 Claims. (Cl. 58—44)

This invention concerns an illuminated multiple clock and globe display device.

According to the invention there is provided a display device including a support on which is rotatably mounted a triangular casing. In the three vertical walls of the casing are supported clocks set to indicate times in different cities. A globe map of the world is rotatably mounted on the casing. Suitable lamps are provided to illuminate the globe and clocks as the casing and globe rotate. A selector switch is provided for selectively controlling an electric circuit in which the lamps and drive motors for the casing and globe are connected to illuminate the lamps or to energize any of the motors. In one form of the invention, the display device is intended for use in a home, hotel lobby or other place where persons congregate. In this use, the support may include a radio or other audio or video entertainment means. In another form of the invention, the display device is intended for use on top of a building, and the support for the device may be the roof of the building, a roof tower, or the like.

It is therefore a principal object of the invention to provide a display device including a plurality of clocks carried by a rotatable casing on a support, with a globe map rotatably mounted on the casing, and lamps carried by the casing to illuminate both the clocks and globe.

Another object is to provide a circuit selector device for selectively causing rotation of drive motors which rotate the globe and casing and for lighting the lamps.

Still another object is to provide a device as described wherein the lamps define a ring-like structure marked with a uniformly divided scale, and the globe carries pointers which coact with the scale to serve as a sweep second timer as the globe rotates.

For further comprehension of the invention, and of the objects and advantages thereof, reference will be had to the following description and accompanying drawings, and to the appended claims in which the various novel features of the invention are more particularly set forth.

In the accompanying drawings forming a material part of this disclosure:

FIG. 1 is a perspective view of a display device embodying the invention.

FIG. 2 is a top plan view of the device of FIG. 1.

FIG. 3 is a sectional view on an enlarged scale taken on line 3—3 of FIG. 1.

FIG. 4 is a diagram of an electric circuit employed in the device.

FIG. 5 is a side elevational view of another display device according to the invention.

FIG. 6 is a top plan view on an enlarged scale of the display device of FIG. 5.

FIG. 7 is a sectional view on a reduced scale taken on line 7—7 of FIG. 6.

FIG. 8 is a sectional view on a further enlarged scale taken on line 8—8 of FIG. 6.

FIG. 9 is a perspective view of a lamp employed in the device of FIGS. 6–8.

FIG. 10 is a sectional view on an enlarged scale taken on line 10—10 of FIG. 9.

FIG. 11 is an exploded perspective view of parts of a frame-like support bracket employed for the lamps of FIGS. 5–10.

Referring to the drawings, there is shown in FIGS. 1–3 a display device 10 including a support in the form of a rectangular box 12. The box has a flat top 14 defining a platform, vertical opposing sides 15a, 15b, a front wall 16, rear wall 17 and flat rectangular bottom 18. Over the top 14 is a triangular casing 20 having three vertical walls 21a, 21b, 21c disposed at angles of 60° to each other. The casing has a flat horizontal triangular bottom 22 and a flat horizontal triangular top 24. In each of the vertical walls 21a–21c is a hole 25. Electric clocks 26a, 26b, 26c are mounted in the respective holes. The minute and hour hands 28, 30 of the clocks can be set by turning a control knob 32 which extends outwardly of the face of each clock. In a hole 31 over each clock is a lamp socket 33. Lamps 34a, 34b, 34c are supported in the sockets.



The casing 20 is rotatably supported over the flat top 14 by an axially vertical shaft 36 extending upwardly from a motor 37 mounted inside the box 12 on bottom 18; see FIG. 3. The shaft extends through a hole 38 in top 14. A flat circular disk 40 is secured to the upper end of the shaft 36. The disk is secured in a recess 42 by screws 44 in the bottom 22 of the casing 20. The shaft has an axial extension 46 extending into the casing; see FIG. 3. Three spaced prongs 48a, 48b, 48c extend downwardly through holes 50 in the bottom of the casing. The prongs are held in position by spring lugs 52 secured by screws 54. These lugs serve as connecting means for wires 53 which terminate at the clocks and lamp sockets inside the casing. The wires also terminate at a motor 55 secured to the underside of top wall 24 of the casing.

Three concentric, conductive rings 56a, 56b, 56c are set in the top 14 of the box. Connected to the rings are depending contact elements 57. Wires 58 connected to these elements terminate at switch 60. The switch has a control knob 62 located on the front wall 16 of the box. This switch has three switch positions marked C, G, L and ALL.

Over the top of casing 20 is a globe 70. This globe has a map 72 inscribed thereon. A shaft 74 extends upwardly from motor 55. On this shaft is a sleeve shaft 75 extending downwardly from the globe. The shaft 75 has a radial flange 77 set in a recess 76 in the bottom of the globe. A bearing plate 78 is mounted on top of the casing and is held by screws 80. The shaft 75 passes rotatably through and is supported in bore 81 of the bearing plate.

FIG. 4 shows the electric circuit 100 associated with the device. This circuit includes the globe motor 55, casing motor 37, lamps 34a–34c, clocks 26a–26c, switch 60, the three contact rings 56a–56c, and prongs 48a–48c. One terminal of each lamp, motor and clock is connected to a common wire 102 which terminates at shaft extension 46. A spring wiper contact 47 supported on the underside of the casing makes continuous contact with shaft 36 of motor 37. Return wire 104 is connected from contact 47 to the power supply plug 106. Motor 37 has a return wire 105 connected to wire 104.

The prongs 48a–48c may include springs 48' to improve the electrical connections.

Instead of two electric motors, one may be used with suitable reduction gears for producing any desired speed.

Switch 60 has four fixed contacts 61a–61d at its four positions, a rotatable switch arm 63 and a contact strip 65 at the end of arm 63. Two further fixed contacts 67a, 67b are located on either side of contact 61d. Arm 63 is connected via a single pole-single throw switch 110 to power line 112. Switch 110 is mounted on the front wall 16 of the box. The power line 112 is also connected to outer ing 56a which in turn is connected via prong 48a and wire 114 to all of the clocks in the casing. Center ring 56b is connected to switch contacts 61b and 61d. Prong 48b contacts ring 56b and is connected via wire 116 to lamps 34a–34c. Inner ring 56c is connected to switch contacts 61c and 67a. Motor 37 has a wire 118

connected to switch contacts 61a and 67b. Plug 106 can be inserted in any suitable convenience outlet. Prong 48c contacts ring 56c and is connected via wire 115 to motor 55. A radio receiver 120 can be connected via wires 122 to the power plug. This radio receiver is disposed inside the box 12 and is operated by controls 123 on the front wall of the box.

In operation of the device 10, when switch 110 is closed and the plug 106 is connected to a suitable power supply, the casing 20 can be caused to rotate by setting the switch 60 to position C to energize motor 37. If the switch is set to position G the motor 55 will be energized and the globe 70 will rotate. If the switch is set to position L the lamps will be energized and will light. When the lamps light they illuminate the map 72 on the globe and the faces of the clocks 26a–26c. If the switch 60 is set to position ALL, then both motors 37 and 55 will be energized and the globe and casing will both rotate. At the same time the lamps will light to illuminate both the globe map and casing.

The radio may be turned on at the same time so that the illuminated display of turning clocks and globe map may be accompanied by music.

FIGS. 5–11 illustrate another form of the invention in which the display device 10a is mounted on top of a building B. Parts corresponding to those of display 10 are similarly numbered. On the roof 200 of the building is a cylindrical tower 202 which acts as a support for the triangular casing 20a. On the side walls 21 of the casing are large electric clocks 26. The minute and hour hands 28a, 30a of the clocks may be set to times in different cities as indicated by indicia 204 on the walls of the casing. Casing 20a rotataes on shaft 36a driven by motor 37a. Globe 70a has a map 72a of the world inscribed thereon. In place of the lamps 34a–34c of device 10 there are provided three arcuate tubular fluorescent lamps 34, shown best in FIGS. 6, 9 and 10. These lamps are circularly curved and extend through about 120° of arc. When assembled together on frame 210 which supports them on the casing, the lamps define a ring structure. The lamp ring extends all around the globe.

On each lamp is a series of spaced markings 209 each extending circumferentially 180° around the outer side of the lamp. Each lamp has a transparent tubular glass body 211 around which is a transparent plastic sleeve 212; see FIGS. 9 and 10. The markings 209 are molded into the transparent plastic sleeve and may be opaqued or may have various colors. Each lamp terminates in caps 214 at opposite ends from which extend contact pins 216. These pins fit into contact sleeves 218 set into double sockets 220 carried by a frame structure 210; see FIG. 8.

Frame 210, as best shown in FIGS. 8 and 11, includes a flat annular ring 221 having three circumferentially spaced arms 224 extending upwardly and outwardly of the ring. The ring has holes 225 for receiving bolts to secure the ring to the top of the casing 20a. Each arm terminates in a semicylindrical seat 219 which supports a cylindrical lamp socket 220. Electric cable 228 extends from socket 220 and lies in a groove 229 extending longitudinally of the arm. This cable provides power to the lamps whose ends are engaged in each socket. A clamping arm 230 is removably mounted on each arm 224. Holes 232 in arms 230 register with holes 233 in arms 224 for receiving bolts to secure the arms together. Each arm has a semicylindrical clamp 234 on its outer end and upper which fits over the semicylindrical seat 219 to form a cylindrical housing therewith for socket 220 and to lock the ends of the adjacent lamps therein. A flat lug 236 extends inwardly at the lower end of each arm 230. The lugs have holes 238 for receiving bolts to secure the lugs to the flat top of ring 221.

Three arms 250 extend outwardly of the globe 70a. The arms extend in a flat horizontal plane just above the horizontal plane of the ring of lamps 34. Arms 250 have depending pointers 252 at their outer ends just outside of the ring of lamps.

On top of the globe may be provided a socket 255 which receives staff 260 supporting a flag 262. The globe rotates on shaft 75a which has a radial flange 263 riding on a bearing 265 in the top of the casing. The shaft is driven by motor 55a in the casing.

The circuit of FIG. 4 is applicable to display device 10a, except that parallel connected lamps 34a–34c may be replaced by the arcuate lamps 34 as indicated by dotted lines in FIG. 4.

Operation of the device 10a is the same as for device 10 described above. When the switch 60 is set to ALL position, the lamps 34 light to illuminate the map 72a on the rotating globe 70 and also illuminate the clocks 21 on the rotating casing. If the speed of rotation of the motor 55a driving globe 70a is once per minute and if markings 209 are sixty in number, then the pointers carried by arms 250 will serve as sweep second hands marking out seconds while the hands of the clocks mark out minutes and hours. This sweep second function will be performed even though the lamps 34 are extinguished during the daytime, as long as the globe rotates either while the casing 20a is stationary or is rotating. Since the globe and lamps 34 rotate with the casing while the casing rotates, and the globe is carried by the casing, there will be no loss of accuracy in timing seconds.

The devices described thus serve as multi-purpose display means useful indoors or outdoors. If desired, the display device 10a can be made on a smaller scale for use indoors. Instead of three individual parallel connected arcuate lamps 34 a single 360° ring lamp can be used for smaller size indoor installations.

While we have illustrated and described the preferred embodiments of our invention, it is to be understood that we do not limit ourselves to the precise constructions herein disclosed and that various changes and modifications may be made within the scope of the invention as defined in the appended claims.

Having thus described our invention, what we claim as new, and desire to secure by United States Letters Patent is:

1. A clock and globe map display, comprising a support, a casing rotatably mounted on a vertical axis on said support, said casing having a plurality of walls facing in different horizontal directions, an electric clock mounted on each of the walls, a globe inscribed with a map rotatably mounted on a vertical axis on top of said casing, a lamp means carried by the casing to illuminate both the clocks and map, a first motor in said support driving the casing, a second motor in said casing driving the globe, circuit means connected to the lamp means, clocks and motors for energizing the same, and a selector switch in said circuit means for selectively energizing the lamp means and motors individually and all together, said lamp means being a circular ring lamp structure surrounding the globe and casing, a frame supporting said lamp structure on the casing, said ring lamp having a series of equally spaced division markings thereon, and a pointer carried by the globe and circumferentially passing along the lamp markings to indicate passage of time as the globe rotates.

2. A clock and globe map display, comprising a support, a casing rotatably mounted on a vertical axis on said support, said casing having a plurality of walls facing in different horizontal directions, an electric clock mounted on each of the walls, a globe inscribed with a map rotatably mounted on a vertical axis on top of said casing, lamp means carried by the casing to illuminate both the clocks and map, a first motor in said support driving the casing, a second motor in said casing driving the globe, circuit means connected to the lamp means, clocks and motors for energizing the same, and a selector switch in said circuit for selectively energizing the lamp means and motors individually and all together, said lamp

means being a circular ring lamp structure surrounding the globe and casing, a frame supporting said lamp structure on the casing, said ring lamp having a series of equally spaced division markings thereon, and a pointer carried by the globe and circumferentially passing along the lamp markings to indicate passage of time as the globe rotates, said casing being triangular in horizontal cross section, said walls being three in number with each one of the walls disposed at an angle of 60° to the other two walls.



References Cited in the file of this patent

UNITED STATES PATENTS

| | | |
|---|---|---|
| 470,309 | Silvernail | Mar. 8, 1892 |
| 1,943,598 | Gourley | Jan. 16, 1934 |
| 2,034,498 | Warren | Mar. 17, 1936 |
| 2,036,046 | Harrison | Mar. 31, 1936 |
| 3,004,358 | Clark | Oct. 17, 1961 |
| 3,105,817 | Ducommun | Oct. 14, 1963 |