Nov. 2, 1926. 1,605,521

C. E. DRAKE

TOY TRAIN

Filed Nov. 20, 1925

Fig. 1.

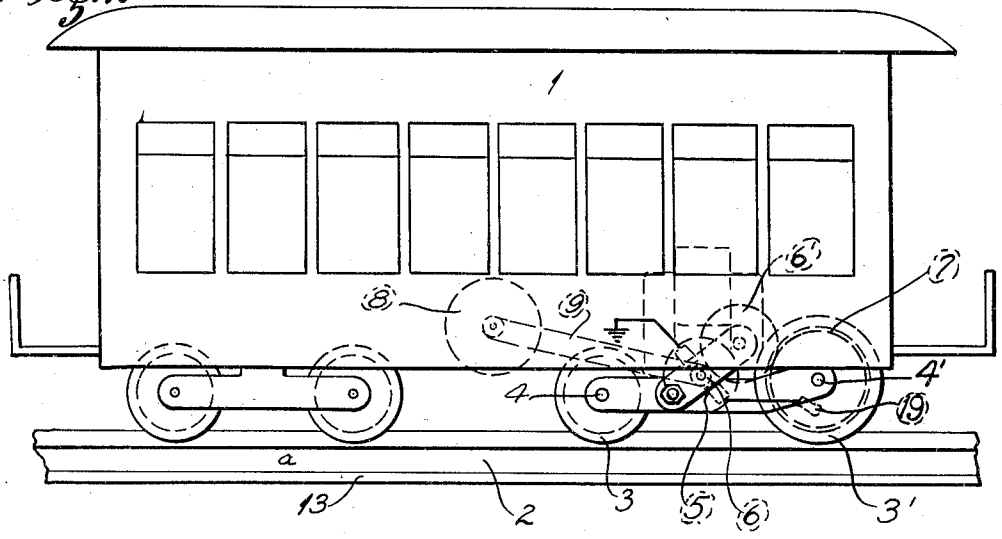

Fig. 2.

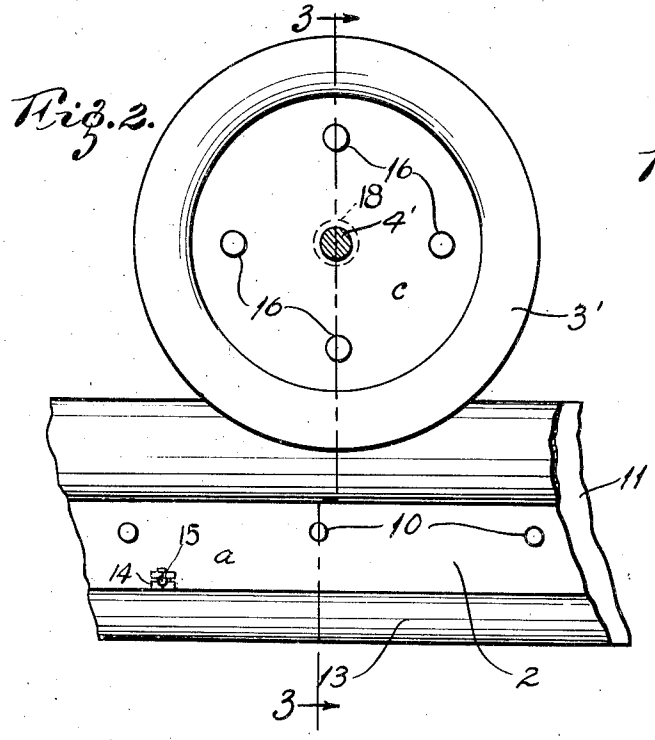

Fig. 3.

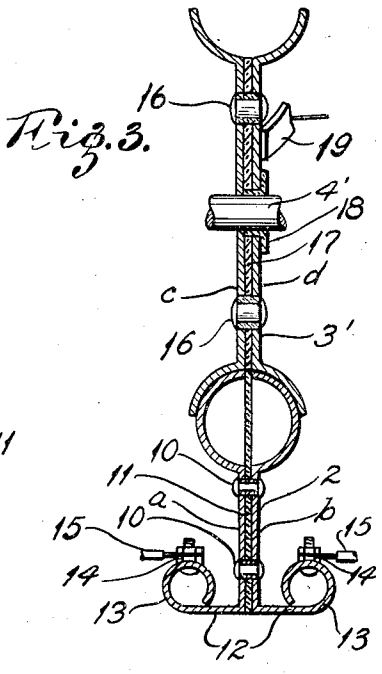

INVENTOR:-
Claud E. Drake
BY Harry A. Bennett
ATTORNEY.

Patented Nov. 2, 1926. 1,605,521

UNITED STATES PATENT OFFICE.

CLAUD E. DRAKE, OF WELLSTON, MISSOURI.

TOY TRAIN.

Application filed November 20, 1925. Serial No. 70,279.

My invention has relation to improvements in toy or miniature trains, and consists particularly in a novel track and wheel construction by which the single rail system of trains may be applied to toys. In order that a toy train may be practical it must be adapted to be operated by electricity which requires the use of either two or three tracks to connect the leads to the motor within the electric locomotive or coach. The present invention is directed to a monorail train employing the same general principles as those in commercial practice except that the electric energy necessary to the operation of the driving motor is obtained from a source outside of the train and lead into the locomotive or coach through a single rail and wheels of special construction. The invention is, therefore, directed specifically to the construction of the monorail and wheels that ride thereon. These novel features, as well as the advantages of the invention as a toy, will be better apparent from a detailed description of the invention in connection with the accompanying drawings, in which—

Figure 1 is a side elevation of an electric locomotive or motor car in outline with the operative parts shown diagrammatically; Fig. 2 is an enlarged side elevation of my improved rail and wheel thereon; Fig. 3 is a vertical cross-section taken on the line 3—3 of Fig. 2.

Referring to the drawings, 1 represents an electric motor car adapted to operate on the monorail 2, the wheels 3, 3′ of the car, therefore, being disposed in a plane passing longitudinally through the middle of the car. The wheels 3, 3′ comprising one of the trucks, are mounted on journals 4, 4′, the wheel 3′ serving as the driving wheel and being driven in any well-known manner by an electric motor 5. For the purpose of illustration only, I show the wheel 3′ connected to the motor by a pinion 6, idler gear 6′ and drive gear 7. The motor car is stabilized by a gyroscope 8 actuated by the motor 5 through the medium of a belt 9. The motor 5 obtains its electric current through the rail 2 and wheel 3′ in the following manner: The rail 2 is composed of two identical sections *a*, *b*, each section constituting a half rail, said sections being riveted together by rivets 10, 10 completely insulated from the sections, the sections *a*, *b*, themselves being spaced by an insulating strip 11. The rail flanges 12, 12 are provided with beads 13, 13, to some part of each of which is secured a binding post 14. The binding posts 14, 14 have the line wires 15, 15 connected to them. The wheel 3′ is also made in two sections *c*, *d* secured together by rivets 16 insulated from the sections, the sections also being insulated from each other by an insulating disc 17. Section *d* of the wheel 3′ is also insulated from the journal 4′ by an insulating sleeve 18, while the section *c* is grounded to the car by being electrically connected to the journal. By referring to Fig. 3, it will be apparent that the two sections of each wheel make electric contact with the respective sections of the rail on which they rest, and the current applied to the rail sections *a*, *b*, may be led into the motor car by a brush 19 adapted to wipe over the tread portion of wheel section *d*.

Having described my invention, I claim:

1. In combination with a monorail car, a rail therefor, said rail being composed of sections in close juxtaposition and insulated from each other, a car wheel adapted to ride on said rail, said wheel being composed of sections in close juxtaposition and insulated from each other, the respective sections of the rail and wheel being adapted to make electric contact, a source of electric energy connected to said rail sections, and electrical connections leading from the car wheel sections to the car motor.

2. In combination with an electric motor car having a drive wheel, a rail for said drive wheel, said rail having a tread circular in cross-section and comprising a pair of electrical conductors insulated from each other, and said drive wheel having a pair of electrical conductors insulated from each other and comprising a semi-circular supporting surface adapted to contact with the rail tread.

In testimony whereof I hereunto affix my signature.

CLAUD E. DRAKE.