Jan. 5, 1965 E. D. VERE NICOLL 3,164,152

INFLATABLE SPLINT

Filed Feb. 5, 1962 5 Sheets-Sheet 1

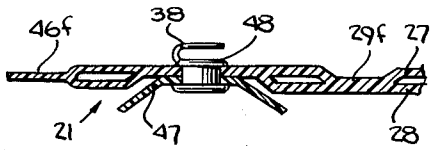

Fig. 9.

Fig. 1.

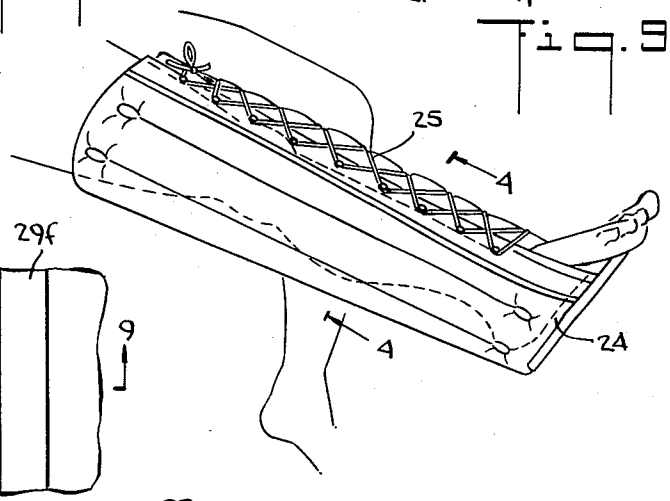

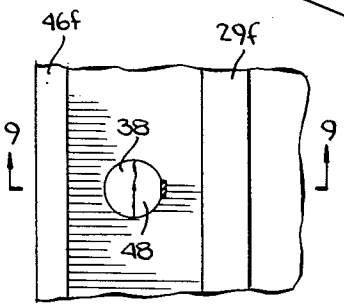

Fig. 8.

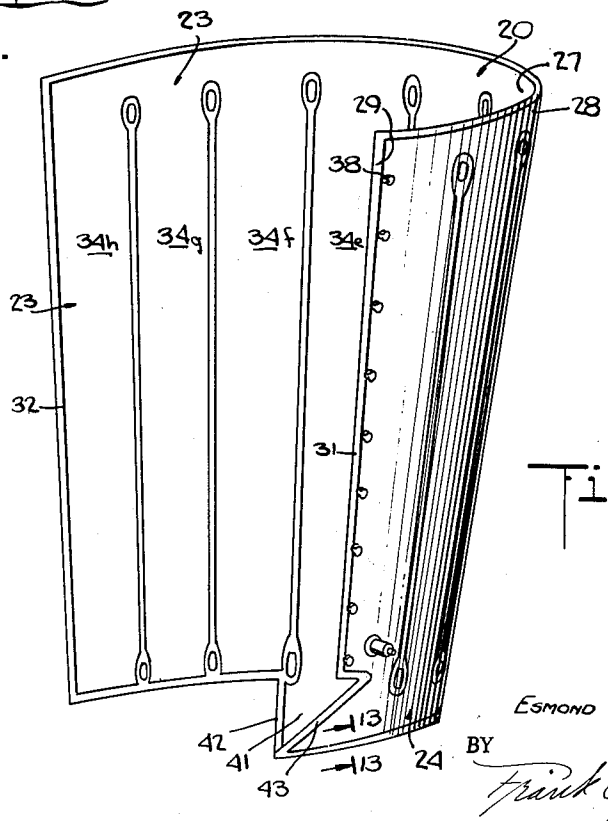

Fig. 2.

INVENTOR.
ESMOND D. VERE NICOLL
BY
Frank G. Porter
his ATTORNEY

Jan. 5, 1965 E. D. VERE NICOLL 3,164,152

INFLATABLE SPLINT

Filed Feb. 5, 1962 5 Sheets-Sheet 2

Fig. 3.

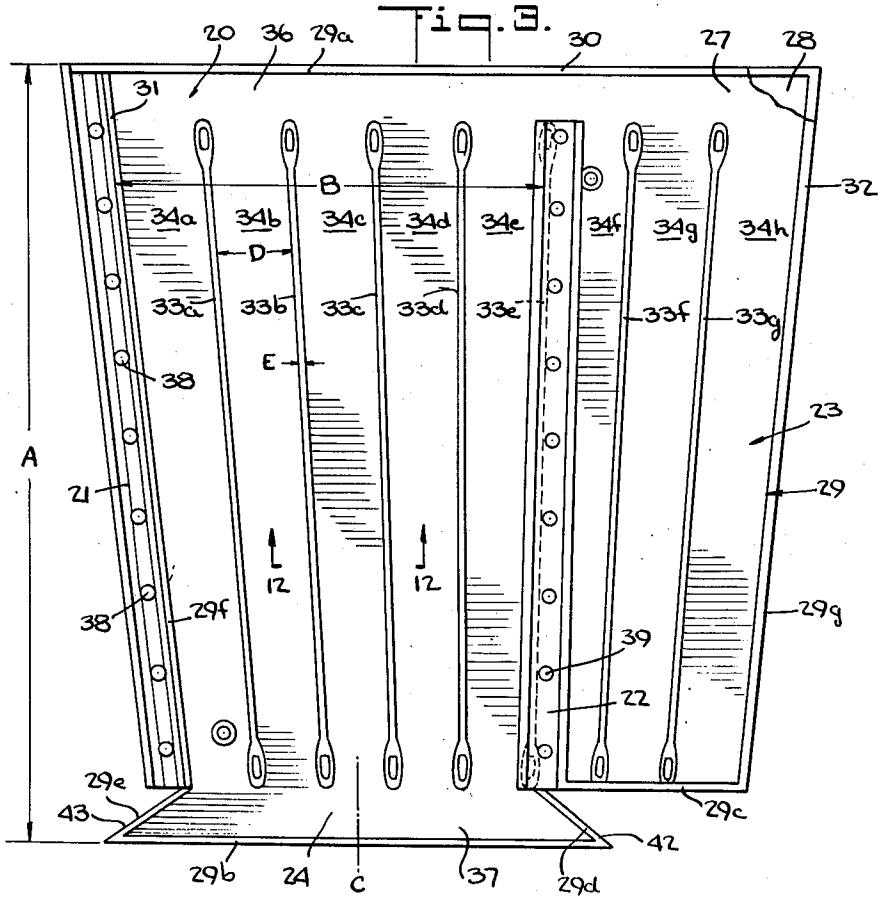

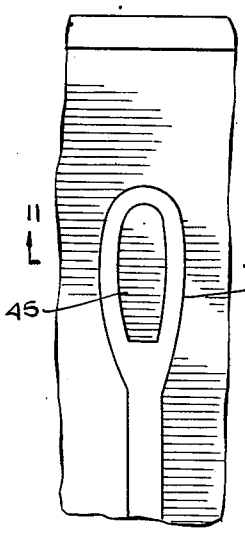

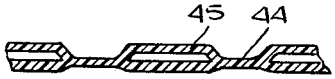

Fig. 11.

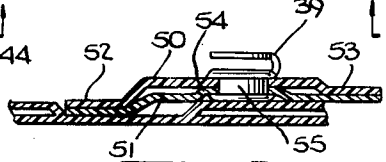

Fig. 7.

Fig. 10.

Fig. 6.

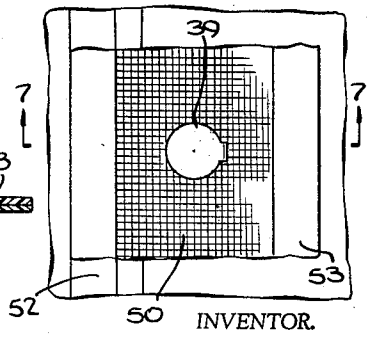

INVENTOR.
ESMOND D. VERE NICOLL
BY
Frank C. Bauer
his ATTORNEY

INFLATABLE SPLINT

Filed Feb. 5, 1962 5 Sheets-Sheet 3

Fig. 4.

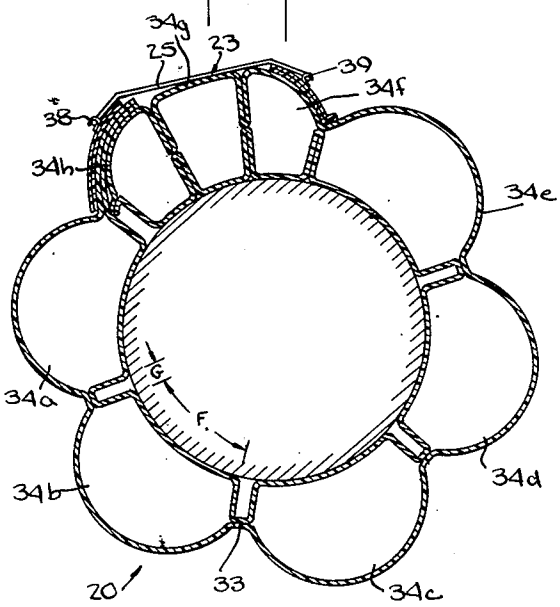

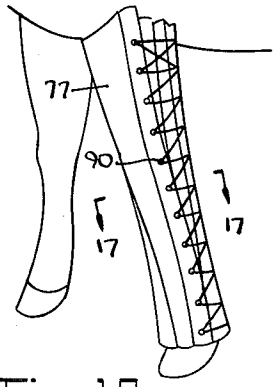

Fig. 16.

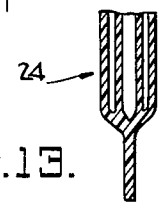

Fig. 13.

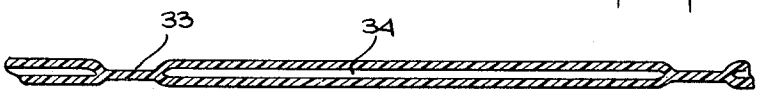

Fig. 12.

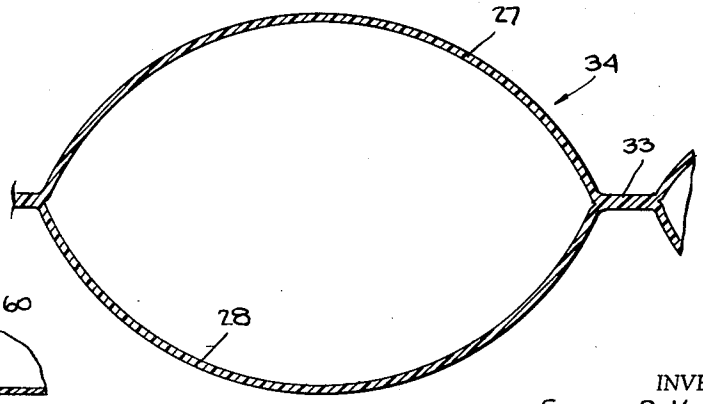

Fig. 5.

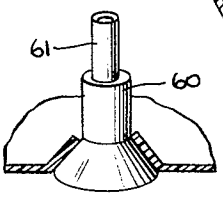

Fig. 14.

INVENTOR.
ESMOND D. VERE NICOLL
BY
Frank G. Bower
his ATTORNEY

INFLATABLE SPLINT

Filed Feb. 5, 1962 5 Sheets-Sheet 4

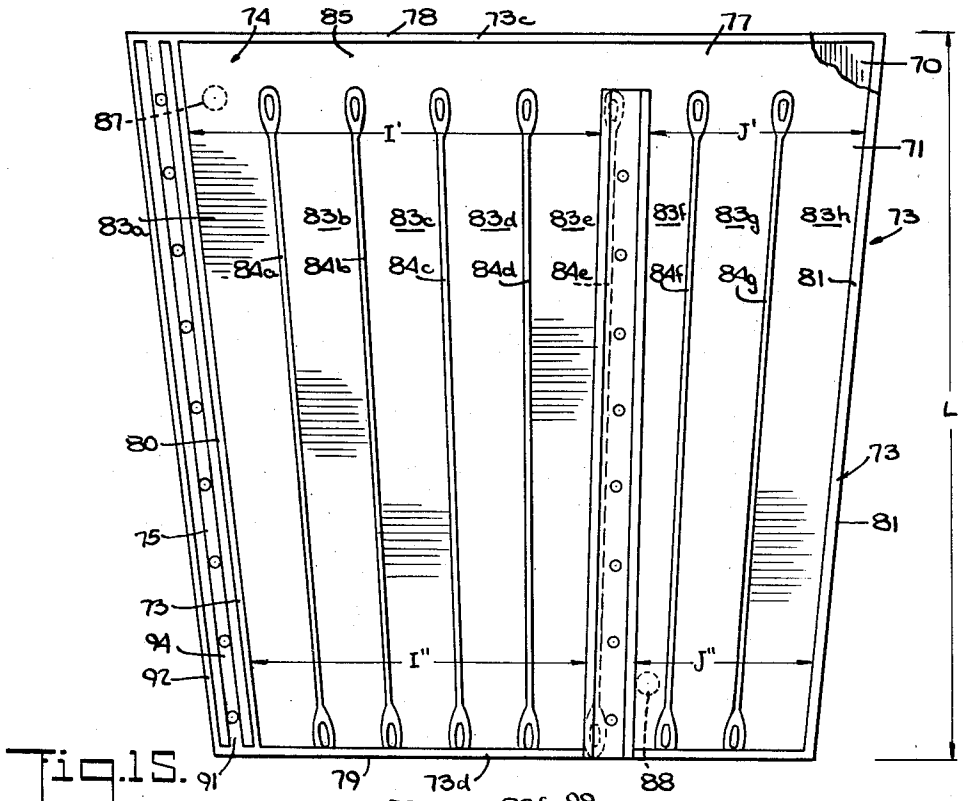

Fig. 15.

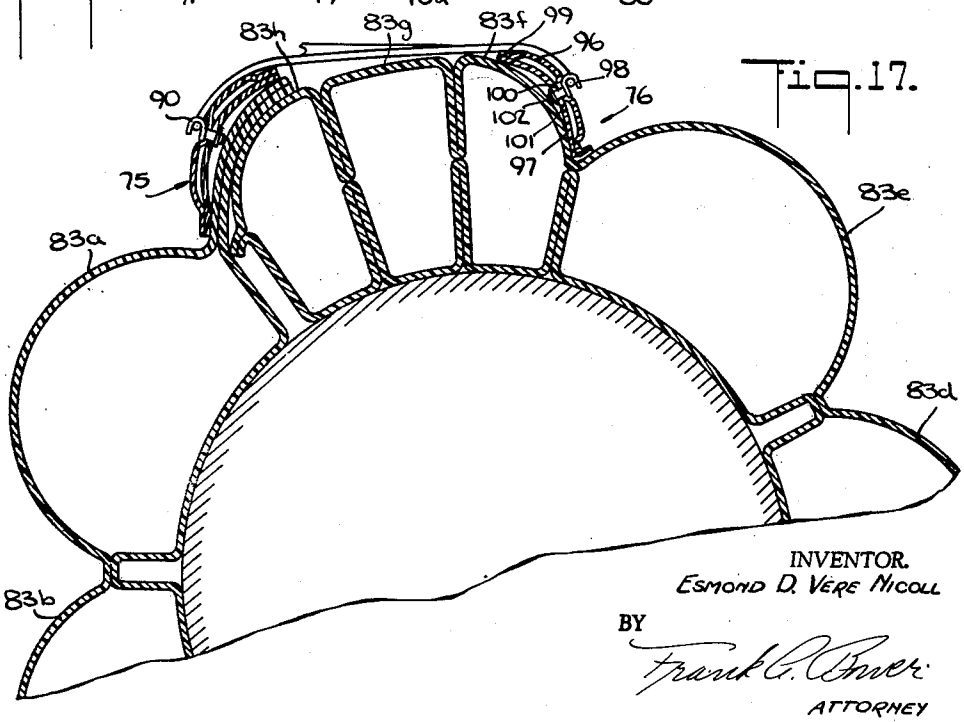

Fig. 17.

INVENTOR.
ESMOND D. VERE NICOLL

BY
Frank G. Ower
ATTORNEY

INFLATABLE SPLINT

Filed Feb. 5, 1962 5 Sheets-Sheet 5

Fig. 18.

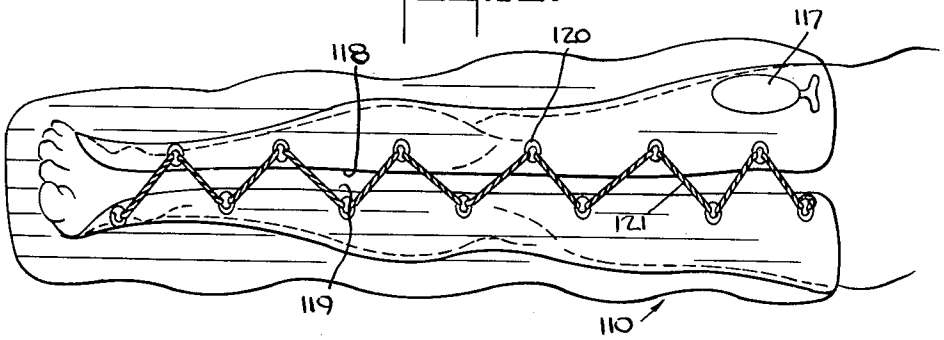

Fig. 19.

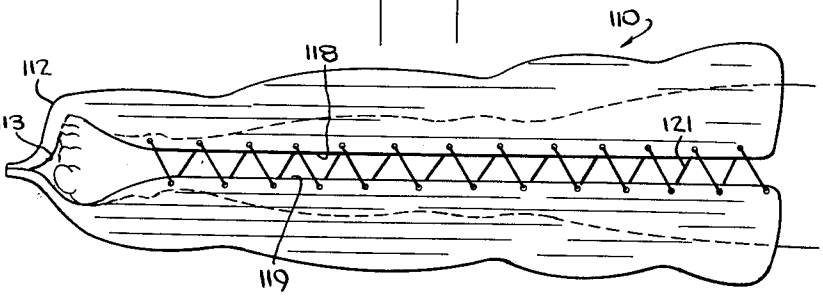

Fig. 21.

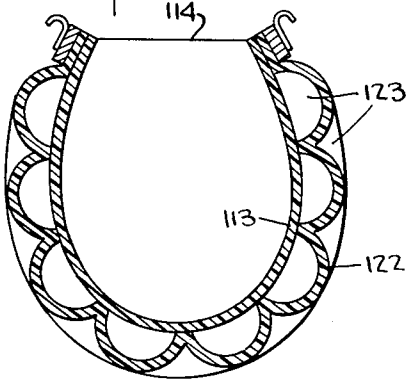

Fig. 20.

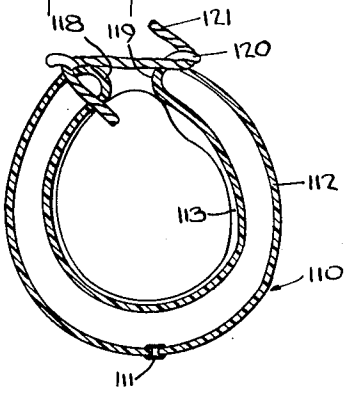

INVENTOR.
ESMOND D. VERE NICOLL
BY
Frank A. Bauer
his ATTORNEY

United States Patent Office

3,164,152

Patented Jan. 5, 1965

1

3,164,152
INFLATABLE SPLINT

Esmond D. Vere Nicoll, 400 Locust Ave., Charlottesville, Va.

Filed Feb. 5, 1962, Ser. No. 171,198
2 Claims. (Cl. 128—87)

This application is a continuation-in-part of Serial No. 788,238 filed January 21, 1959, now abandoned.

This invention relates to inflated splints for supporting injured legs of persons or horses, and particularly for fractured legs.

Many injuries and fractures to legs occur in remote localities that are distant from immediate competent medical attention. Transportation of the injured person is hazardous and painful, and may result in further injury to the fractured leg. For some time there has been a great need for a small compact leg splint to meet emergencies of this type. Such a splint should meet several requirements as to size, ease of application and protection of the injured member. First, the splint should be capable of being folded into a compact small size that can fit into a first aid kit or be easily carried in a pocket or haversack. Second, the splint should be capable of being properly applied by a person with no previous experience with fractures without further injury or damage to the broken leg. Third, the splint should properly support the injured leg to render the fractured portions immobile and should also be comfortable on the leg. In this connection it is desirable that clothing and footwear be permitted to remain on the injured member to protect the leg against the weather and avoid possible further injury by their removal, and that the splint be equally effective when the leg has been bandaged due to cuts or abrasions which often occur with fractures.

These are the basic requirements for the splint to be useful. However, in order to insure the commercial acceptance of the splint it should be rugged in structure and inexpensive to manufacture for extensive stand-by storage.

An object of the invention is to provide a leg splint that may be folded or rolled into a small, light, compact package and easily and properly applied to support an injured leg by a person unskilled in applying splints.

Another object of the invention is to provide a similar splint for horses.

Another object of the invention is to provide an emergency splint which is rugged in structure and inexpensive to manufacture.

Other and further objects will be apparent from the following description taken in connection with the drawings in which:

FIG. 1 illustrates an inflated splint applied to a leg;

FIG. 2 is a perspective view of an uninflated leg splint;

FIG. 3 is a plan view of a leg splint with the lower foot supporting end separated;

FIG. 4 is a sectional view of the splint mounted in position on a leg;

FIG. 5 is a fragmentary sectional view of the inflated splint;

FIG. 6 is a fragmentary plan view of the fastener flap with a hook;

FIG. 7 is a sectional view of the fastener flap and hook taken along line 7—7 of FIG. 6;

FIG. 8 is a plan view of the edge fastener strip and hook;

FIG. 9 is a sectional view of the edge fastener strip and hook taken along line 9—9 of FIG. 8;

FIG. 10 is an enlarged plan view of the seam and the terminating end of an intermediate seam forming the tubular portions;

2

FIG. 11 is a sectional view of the terminating end of the seam taken along line 11—11 of FIG. 10;

FIG. 12 is a sectional view of deflated tubular portions taken along line 12—12 of FIG. 3;

FIG. 13 is a sectional view of one of the lower seams;

FIG. 14 is a perspective view of the valve;

FIG. 15 is a plan view of the outer side of the equine splint;

FIG. 16 is a view of the equine splint on a horse's leg;

FIG. 17 is a sectional view taken along line 17—17 of FIG. 16;

FIGS. 18 and 19 are top views of other embodiments; and

FIGS. 20 and 21 are sectional views taken along line 20—20 and line 21—21 of FIGS. 18 and 19, respectively.

The splint generally comprises a main panel **20** having fastening strips **21**, **22** extending longitudinally along the edges for securing the main panel **20** around the leg and a flap panel **23** extending from one of the fastening strips to extend across the front of a leg between the two fastening strips. A foot supporting panel **24** extends from the main panel **20** and is closed along the bottom to provide a support for the foot. As illustrated in FIG. 1 a cord **25** is laced back and forth between the fastening strips **21**, **22** to draw the edges of the main panel **20** together and to compress the flap panel **23** between the fastening strips **21**, **22** and the cord.

The splint is formed from two flexible sheets **27**, **28** of plastic material which are of the same size and shape and are fastened together by a welded peripheral seam **29** extending around the edges of the sheets to form an enclosed inflatable air space between the sheets. The welded sheets form a laterally extending upper edge **30** and opposite longitudinally extending side edges **31**, **32** tapering slightly toward the lower end of the splint to accommodate the splint to the reduction in size of the leg and to define the main and flap panels **20**, **23**. Longitudinally extending intermediate welded seams **33***a–g* laterally spaced extend between the upper and lower edges to form longitudinally extending tubular portions **34***a–h*. The intermediate seams in the main panel terminate short of the upper and lower seams **29***a*, **29***b* to form upper and lower passages **36**, **37** connecting the upper and lower ends of the tubular portions for the distribution of air through the splint. In the flap panel the intermediate seams **33***e*, *f*, *g* join the lower seam **29***c* to close the lower ends of the tubular portions **34***f–h*.

The main panel of the splint has a length A, which is twenty-nine inches in this embodiment, to accommodate an average leg. Along the edge the fastening strip **21** is formed from the sheets for supporting fastening hooks **38**. At a distance B the fastening strip **22** is welded to the outer sheet **27** for supporting the fastening hooks **39** attached thereto. The dimension B is of such a magnitude that on lacing the inflated splint around the leg the fastening strips will be positioned at the front of the leg so that the lacing, as illustrated in FIG. 1, extends over the front of the leg. The two sheets **27**, **28** extend from the fastening flap **22** to carry the splint over the front of the leg to the other terminal strip **23**, as illustrated in FIG. 4. This flap panel **23** has two longitudinally welded seams **33***f*, *g* and a seam **33***e* common with the main panel. These seams are laterally spaced to form the three tubular members **34***f*, *g*, *h* terminating at the upper end short of the upper edge to extend the connecting passage **36**, and are joined with the lower section **29***c* of the peripheral seam **29**.

The two sheets extend at the bottom to form the foot panel **24** which is folded along a line C and welded along the peripheral seam sections **29***b* to close the bottom of the splint, as illustrated in FIGS. 2 and 13. The foot panel

extends from the edge fastening strip **21** to the flap fastening strip **22** so that when the panel is folded and seamed the terminal strips are positioned at the front part of the leg and the foot extends through the V-shaped opening **41** formed by the edges **42**, **43** of the panel and below the lower seam **29***c* of the foot panel. As illustrated in FIG. 3, the free edges of the foot panel are at an angle so as to extend forwardly and provide additional support to the foot, as illustrated in FIG. 1.

Of particular interest is the formation of the intermediate seams **33***a–h* and the dimensions of the tubular portions **34***a–g* formed thereby. The leg should be well supported by extensive contacting areas of the tubular portions and the seams should be kept at a minimum width consistent with a strong bond between the two sheets of plastic. As best illustrated in FIG. 3, five tubular portions are formed, each of approximately the same width D and the seams have a width E. The width D of the tubular portions narrows gradually toward the lower end of the splint to accommodate to the tapering of the outer edges **31**, **32**.

At the upper end of the panel the dimension B, illustrated in FIG. 3, is approximately 17 inches and the dimension D between the center of the seams is approximately 3½ inches. These dimensions gradually taper at the lower end to 13¾ inches for dimension B and 2¾ inches for dimension D.

When inflated, the tubular portion has a cross section, as illustrated in FIG. 5, in which both the inner and outer sheets **27**, **28** are distended in a curve. Of particular importance is the inner wall of the tubular portion which engages the leg. As illustrated in FIG. 4, each of these walls engages the leg over a substantial arc F to provide support both laterally and longitudinally to the leg with the spacing G between the contacting areas at a minimum. The middle tubular portion **34***c* engages the back of the leg and the tubular portions **34***b*, *d* on each side are at an angle and extend along the side of the leg with the two outer tubular portions **34***a*, **34***e* extending along the front portion of the leg to position the terminal strips at the front of the leg but spaced on opposite sides thereof. The three tubular portions in the flap are dimensioned approximately the same as the other tubular portions, but on attachment of the splint to a leg they are squeezed into a tighter configuration by the lacing. As illustrated in FIG. 4, the sides of the tubular portions **34***f*, *g*, *h* are squeezed together in contact so that a substantially continuous surface is presented to the front of the leg. The lacing extending over the top of this panel **23** presses and creases into the outer sheet forming the outer walls of the tubular portions to form a very firm member on the front of the leg. Thus the flap panel **23** provides a relatively stiff splint member for immobilizing the leg.

The peripheral edge seam is formed by customary heat sealing methods to join the edges of the sheets together forming a hermetic seal. The seam is approximately ¼″ to 5/16″ wide to secure a strong and permanent bond. The upper edge seam **29***a* extends across the top from corner to corner and the side seams **29***f* and **29***g* extend from corner to corner along each side edge. Along the side edge with the fastener strip **21**, the seam **29***f* extends inside of the fastener strip **21**. The bottom edge seam is formed in two separate sections **29***b*, *c* in order to accommodate and provide the foot panel **24**.

Along the edge **42** of the foot panel the angular seam **29***d* connects the two sections **29***b*, *c*. The other angular seam **29***e* along edge **41** is connected between the edge seam **29***f* and the seam section **29***b*.

The intermediate seams **33***a–h* forming the tubular members are approximately ¼″ wide and are also formed by heat and pressure. The seams form a unitary bond between the two sheets and are thinner than the combined thickness of the sheets, as illustrated in FIG. 12. The ends of the intermediate seams are rounded off to distribute the stress at the end of the seams and prevent a separation of the sheets. As illustrated in FIGS. 10 and 11 the terminal end **44** of the seam is oval shape with the center portion **45** unbonded. Along the top the intermediate seams are spaced from the upper edge seam **29***a* and along the bottom seams are spaced from the seam section **29***b*. As previously described, on the flap panel the seams **33***f–h* are joined at the terminal end with the section **29***c* to close the ends of the tubular members therebetween.

The fastener strip **21** is an extension of the main sheets **27** and **28** with an edge seam **46** extending along the outer edge, as illustrated in FIG. 9. A reinforcing strip **47** extends longitudinally between the two seams for reinforcing the fastener strip and is welded to the fastener strip between the seams **29***f* and **46***f*. The hooks **38** are of the Klondike type and are secured to the strip by rivets **48** passing through the middle seam and the reinforcing strip **47**. The reinforcing strip is made of plastic material with embedded nylon threads in criss-crossed fashion to prevent tearing of the rivets **48** from the fastener strip. The hooks are spaced approximately 3″ apart and the seam welding the reinforcing strip is approximately ¼″ in width. Along the other edge of the main panel between the tubular portions **34***e* and **34***f* the fastener strip **22** is welded to the outer sheet **27** along the seam **33***e*, as illustrated in FIG. 7. This flexibly hinges the strip to the outer sheet **27**.

The fastener strip **22** is formed by two plastic strips **50**, **51**. The inner plastic strip **51** is similar to the outer sheet **27** and the outer strip **50** is a reinforcing strip similar to the reinforcing strip **47**. These two strips are welded along their longitudinal edges by seams **52**, **53**. As with the other fastener strip, a middle seam **54** is provided through which the rivets **55** are fastened to secure the hooks **39** to the fastener strip. The hooks **39** are also mounted on 3″ centers and are in substantial alignment with the hooks **38**.

The flap panel **23** has a lateral dimension H which at the upper end of the splint is approximately 10″ and at the lower end of the splint is approximately 7½″.

The sheet material is very soft and pliable with a great deal of strength and toughness to withstand abuse. In this embodiment a vinyl plastic sheet has been used of 12 gauge. However, 20 gauge may be used, which will reduce the overall bulk of the splint and permit it to be folded into a smaller size than the 12 gauge sheet.

Various means may be provided to inflate the splint. The simplest form is a slip valve **60**, illustrated in FIG. 14, which has an inner hollow stem **61** which is pulled out to inflate or deflate the splint. On setting the stem the valve is closed to retain the air or other gas in the splint. As illustrated in FIG. 3, two valves may be provided on the outer sheet **27**. One may be located on the upper end of the flap panel **23** and the other may be located at the lower end of the main panel. Four to five normal breaths are sufficient to inflate the splint. The two valves permit two persons to inflate the splint at the same time and make it easier to deflate the splint for repackaging after use. Other conventional means may be used, such as a pump or a charged cartridge. However, since this is primarily an emergency device for use in remote locations, the simple blowing up of the splint is preferred.

The splint may be folded or rolled in various ways and in one manner it may be folded to a size of approximately 1½″ thick by 8″ wide and 10″ long. There are no additional elements or members required to provide the necessary support to the leg so that the entire splint required is reduced to the foregoing dimensions. The splint may be easily fastened to the leg and simple instructions may be provided for the novice. The deflated splint is slid under the injured leg and then it is inflated through either valve **60** to its maximum rigidity. The valve is then closed and the cord firmly laced across the fastener strips and tied at the top.

The splint is particularly useful as an emergency aid for persons sporting or working in remote areas of the coun-

try. Skiers, mountaineers, explorers, hunters and campers could easily include the packaged splint with their other equipment without it occupying a great deal of space. Thus the splint is not in the way if not used and is readily available if required. The splint may also be carried by rescue squads and ambulances for injuries sustained in automobile accidents, falls and the like, even though medical attention is readily available. Although ambulances could carry the more cumbersome stiff splints, the present splint would present a saving in space and ease in application not possible with the larger stiff device. Doctors in hospitals may use the splint for other than emergency use, for temporary purposes for transporting a person to a hospital or for splinting the leg when X-rays are taken. The splint does not obscure X-ray pictures of the bones. Although X-ray may be made through plaster and wood splints, there is a substantial shadow cast which obscures the picture. Thus in addition to the emergency uses, the splint has other medical advantages.

In addition to the emergency use, the splint may be used for a period of time. Often fractured legs are swollen or wounded, and the splint may be used until the swelling has subsided or the wounds treated before applying the permanent plaster cast for the final setting of the fractured bone.

Another advantage of the splint is that it is not affected by moisture and the leg can thus be irrigated. It may also be used for treatment of fractures associated with burns, severe soft tissue injuries requiring dressing and skin loss requiring grafting. The adaptability of the splint also permits it to be applied to a leg with clothing or footwear still in place, since the lacing can be adjusted to compensate for these articles. Thus further injury can be avoided or the leg protected against the elements in the case of emergency use.

In addition to the treatment of fractures, the splint may be medically used on both legs as a method of compression of the venus structure in the treatment of shock.

The foregoing splint is useful in the first aid or treatment of human beings. However, the splint may be modified for use on horses. Horses usually suffer fractures or bowed tendons or the like at some distance from the stable or location where the injury can be properly examined. Since a horse requires its four legs to walk, difficulties are encountered in moving a horse after injury. Wooden type splints have been tried but they are heavy and hard and often severely objected to by the horse, resulting in the thrashing about of the horse causing further injury to the leg or other parts of the horse. The modified splint illustrated in FIGS. 15 to 17 is light and soft and has been applied to broken legs without the objection of the horse and permitting the horse to hobble onto a trailer for transportation to a veterinary center where X-rays and treatment may be performed.

The equine splint is not folded at the lower end. The leg extends through the splint so that the hoof may set on the ground. As illustrated in FIG. 16, when the splint is on the horse's leg the lower edge is around the hoof. Thus in the deflated condition the splint may spread flat, as illustrated in FIG. 15. As in the previous embodiment the splint is formed from two vinyl plastic sheets 70, 71 of the same size and configuration. The sheets may be of the same material or of different material. For purposes of strength and durability, it is preferable that the outer sheet 70 is made of reinforced vinyl with crisscross nylon threads similar to the reinforcing strips of the previous embodiment. The sheets are welded together by a peripheral seam 73 which is approximately one-quarter of an inch in width. The seam hermetically seals the strip to form an inflatable air space. The splint is divided into a main panel 74 bound longitudinally by fastening strips 75, 76 and a flap panel 77 extending from the fastening strip 76 to complete the coverage between the two fastening strips when the splint is on the horse's leg. The upper and lower edges 78, 79 of the splint are parallel. The side edges 80, 81 converge to taper the splint from the upper to the lower end for accommodating the splint to the narrowing of the leg toward the hoof.

The supporting tubular portions 83*a–h* of the splint are formed in the same manner as those in the previous embodiment by intermediate seams 84*a–g*. The seams 84*a–e* on the main panel are sloped to accommodate to the taper of the side edges in a manner similar to the previous embodiment. The fastening strip 76 is welded to the outer sheet 70 on the seam 84*e*. The seams 84*a–g* are of the same construction as seams 34*a–g* of the previous embodiment and have similar terminal ends 85 to distribute the stress and prevent parting of the strips along the intermediate seams. The intermediate seams 84*a–g* are spaced about three and one-half inches apart to provide a sufficient lateral distended span to properly support the horse's leg and provide rigidity and firmness to the strip.

The intermediate seams terminate a distance from the upper and lower edges or seams 73*c*, 73*d* to provide passages 85, 86 interconnecting the tubular portions for the flow of air. Slip valves 87, 88 mounted in the outer sheet adjacent opposite corners of the main panel provide means for inflating or deflating the splint. The fastening strips 75, 76 are the same as strips 21, 22 of the other embodiment. The splint is inflated and wrapped around the horse's leg with the fastening strips at the outer side of the leg.

The splint has an overall length L of thirty-two inches. The main panel has an overall width I′ at the upper end of approximately twenty inches and an overall width I″ of approximately fifteen and one-half inches at the lower end. The flap panel has the same length as the main panel and an upper width J′ of approximately nine inches and a lower width J″ of approximately five and one-half inches.

As previously stated, the fastening strips 75, 76 are similar to strips 21, 22 on the first embodiment and are tapered to converge towards the lower end. The strip 75 is an extension of the sheets 70, 71 from the peripheral seam 73 and is approximately an inch and one-half to an inch and three-quarters wide. The strip extends the entire length of the main panel with Klondike hooks 90 evenly spaced on three inch centers and secured along a middle seam 91 between the peripheral seam 73 and an outer edge seam 92 securing the edges of the sheets together. On the inner side of the strip a reinforcing piece 94 of plastic having nylon threads embedded therein is welded to the middle seam 91 to reinforce the strip and securely retain the rivets on the strip.

The fastening strip 76 is similar to strip 75 and comprises an outer reinforced plastic strip 96 and an inner plastic strip 97. The two strips are welded to the outer sheet along the intermediate seam 84*f* to hingedly secure the strip between the main panel and the flap panel. The strip extends nearly the entire length of the splint terminating short of the lower seam. However, the strip has the same number of hooks 98 as the strip 75 and paired therewith on three inch centers. An edge seam 99 secures the edges together and a middle seam 100 secures the two plastic flap strips together. A second reinforcing piece 101 on the opposite side of the strip 97 provides a firm mounting for the rivets 102 securing the hooks to the fastening strip. The fastening strip 76 extends on the same side of the seam 84*f* as the flap panel to overlap therewith.

The inflated splint has a total weight of slightly less than two pounds and when deflated may be folded into a package of 100 cu. in. As with the first embodiment, this package contains all the parts for the splint as used.

On inflation the tubular portions assume a configuration as illustrated in FIG. 5. The tubular portions 83*a–i* are slightly tapered.

The tubular portions impart a firmness to the splint

along with a direct support of the limb over extended arcs K only slightly spaced apart. The extent of the arc and spacing is easily varied by the tightness of the lacing.

In addition to the tubular portions the splint is formed on wrapping around the leg and laced into a tubular member which renders the splint in cooperation with the tubular portions quite firm. The flap panel is positioned between the fastening strips and the side edges of the main panel and is compressed on lacing to provide a tight binding of the splint on the leg. The amount of compression depends on the desired firmness. The flap panel does not overlap with the main panel but varies in width depending on the size of the leg and the tightness of the lacing. The amount of air in the splint also contributes to the stiffness of the splint and compression applied to the leg. The air is easily adjusted by the amount supplied or released. This is readily acomplished through the valves.

The main panel and the flap panel are wrapped around the leg without the tubular portions completely overlapping. The positioning of the reinforcing strip between the main panel and the flap panel places the main panel under tension, whereas the flap panel is placed under compression to adjust to different size legs and shapes and accomodate the splint to bandages and the like. The splint is not restricted to any particular contour, but with the lacing, position of the flap fastening strip and compression of the flap panel the splint is readily adjustable to leg conditions with the tubular portions circumferentially arranged without overlapping.

It is thus seen that a light firm splint is provided that adequately and properly supports the leg of a horse. The lightness of the splint renders it unobjectionable to the horse since it has the feel of bandages and other supports that the horse is accustomed to. Further, the degree of compression and tightness can be easily varied to accommodate the splint to the horse's temperament. The lack of braces, battens or other similar large stiff members contributes not only to the compactness in storage, but also eliminates the weight objected to by the horse.

In FIGS. 4 and 17 the limb is illustrated as having a circular cross section. It is, of course, understood as to both a human leg and a horse's leg that the leg has varying shapes and sizes to which the splint is readily accommodated. The circular shape is illustrated for purposes of explanation and simplicity in drawing the figure.

In these figures the advantageous support provided by the splint is clearly illustrated. The tubular portions **34** and **83** press over extended arcs against the limb so that the limb is nearly continuously supported around its entire circumference. With the splint formed into a tubular shape, the adjacent inner walls of the tubular members at the seams are nearly parallel so that there is only a slight unsupported portion between the tubular portions. Further, the flap panel may be impressed even further, as illustrated, to provide even a more continuous support between the fastening means. Thus the limb is firmly held by the inflated tubular portions and the tubular shape of the splint, with the firmness applied to the limb almost continuous circumferentially around the leg with an easy and ready adaptation along the leg to the various dimensions.

In FIGS. 18 to 20 another form of the splint without a flap panel is illustrated. These embodiments illustrate the combination of the fastening means extending along the edges of the splint at the front portion of the leg and with a foot panel supporting the foot in combination with the drawing of the edges of the splint over the instep to support the foot in addition to supporting the leg. The splint is made from a thin, light plastic sheet material. The longitudinal portion **110** may be made from a single sheet of the plastic material with the edges of the sheet welded at **111**. The outer U-shaped portion or wall **112** extends beyond the inner U-shaped portion or wall **113** and an end panel **114** may be welded to the end of the U-shaped portion **113** to shape the foot end of the U-shaped portion **113** as indicated in the drawings. A second outer panel **115** may be welded to the outer U-shaped portion **112** so that the portion **112** has generally the same contour as the portion **113**. At the other end of the leg splint a U-shaped plastic piece **116** is welded to the ends of the U-shaped portions **112** and **113** to close the space formed by the two U-shaped portions **112** and **113** and render it gastight.

In FIG. 19 the portions **112** and **113** are joined together to close the end of the splint and seal the chamber. The valve **117** is fastened to the outer U-shaped portion **112** for introducing air, carbon dioxide or other suitable gas to inflate the splint.

In FIG. 18 a carbon dioxide bomb is attached to the valve for providing the inflating gas. The edges **118** and **119** of the splint are spaced from each other and hook fasteners **120** may be secured to the U-shaped portion **112** and a lace **121** loped therethrough for wrapping the splint around the leg. The lace may be adjusted to vary the pressure or the supporting action of the splint on the leg. The valve **117** may also be opened to permit the escape of the inflating gas to adjust the pressure of the splint on the leg. The inner U-shaped portion **113** may be preferably contoured to the general shape of the leg so that on inflation the contacting U-shaped portion **113** will conform to the leg. As illustrated in the drawings, the splint is wrapped around the leg a substantial distance along the thigh, and at the foot it is wrapped to support the heel and instep with the ball and toes of the foot extending out of the splint. The inner wall **113** may be shaped to inflate around and press against the instep and the ankle so that the foot is firmly supported in the splint. In another embodiment in the inner portion the wall is loose and the outer portion or wall is tight when it is wrapped and laced around the leg in an inflated condition. Thus the foot, ankle, calf, knee and thigh are supported by the splint and the degree of pressure and support provided by the splint may be adjusted by the lace **121**.

In FIG. 21 another embodiment of the splint is illustrated. In this embodiment the outer wall **122** extending longitudinally to the inner wall **113** is fastened by welding along longitudinally extending strips to form longitudinally extending flutes and air spaces. These flutes preferably extend the full length of the splint to the U-shaped end panel **123**. A connecting passage is provided around the splint to connect each of the spaces formed by the flutes with the valve fastened to one of the flutes. The outer wall **122** extends as wall **113** and is secured to end panel **123** in similar manner as the wall **113** is secured to the panel **114**. Thus, a gas-tight space is formed with longitudinally extending spaces formed by the flutes. This embodiment provides a splint with a firmer shape and a better support for the leg.

From the foregoing description it is thus seen that a new inflatable splint not requiring any stiffening members has been provided for supporting an injured leg of a human being or a horse. The invention described is set forth in the appended claims.

I claim:

1. An inflatable splint for supporting an injured leg and substantially immobilizing the injured portions thereof comprising two sheets of pliable gas impervious plastic material of substantially the same size and shape and having upper and lower end edges and side edges and sealed along said edges to form an inflatable space therebetween, a plurality of laterally spaced narrow single heat-welded seams spaced from said edges and extending longitudinally and generally parallel to said side edges and each other, said seams thereby further joining said two sheets of plastic material together and separating the said enclosed space into a plurality of inflatable, generally parallel, longitudinally extending

tubular portions, each of said tubular portions being substantially wider than said seams, said tubular portions forming when inflated a plurality of stiffening pieces to shape the splint on inflation and from support for the leg of the wearer, fastening means for releasably attaching one of said side edges to the other of said side edges to form from said sheets a generally cylindrical splint for completely encasing the leg therein, the portion of said sheets between said fastening means forming a main panel, and an extension panel extending longitudinally at at least a portion of the lower edge of said main panel, said tubular portions extending substantially to the lower edge of said main panel, said tubular portions being thereby adapted when said splint is associated with the leg of the wearer to extend below the ankle of the wearer and laterally restrict the movement of the ankle, said extension panel having an interior chamber in communication and inflatable with said tubular portions, and means joining the lower edge of said extension panel to itself for at least a portion of the said extension panel lower edge centrally of the panel thereby forming a generally concave pocket adapted when the inflatable interior chamber and tubular splint portions are inflated to receive and conform to the foot of the wearer, at least partially encasing the same, and to cooperate with the said main panel of the splint to support the foot against the leg and to restrict movement of the foot as well as the leg.

2. The inflatable splint of claim 1, wherein said fastening means comprise first fastening means attached intermediate the side edges of said sheets and second fastening means extending along one of said side edges, the portion of said sheets between said fastening means forming said main panel, and the portion of said sheets to the side of said second fastening means forming an inflatable flap panel, whereby when said first and said second fastening means are fastened together, said flap panel will be positioned between said first fastening means and said second fastening means to complete the wrapping of the splint around the leg, said main panel and said flap, together with said fastening means providing firm support of said leg, and said extension panel extends from the lower edge of said main panel a greater length than said flap panel.

References Cited by the Examiner

UNITED STATES PATENTS

2,028,060	1/36	Gilbert	128—84
2,651,302	9/53	Berry	128—87
2,694,395	11/54	Brown	128—38
2,834,340	5/58	Walter	128—84
2,969,790	1/61	Reddig	128—84
3,083,708	4/63	Gottfried	128—39

FOREIGN PATENTS

440,113	1/57	Germany.
837,750	5/52	Germany.

RICHARD A. GAUDET, *Primary Examiner.*

JORDAN FRANKLIN, ROBERT E. MORGAN, RICHARD J. HOFFMAN, *Examiners.*