Aug. 25, 1959 J. P. ECKERT, JR 2,901,733

SINGLE ENDED CARRIER TYPE MAGNETIC AMPLIFIER BISTABLE DEVICE

Filed Oct. 1, 1954

FIG. 1.

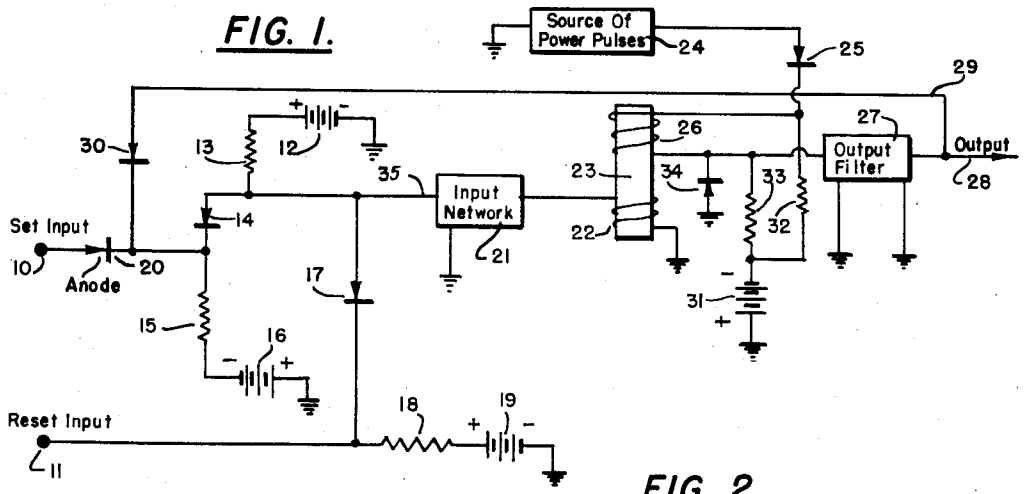

FIG. 2.

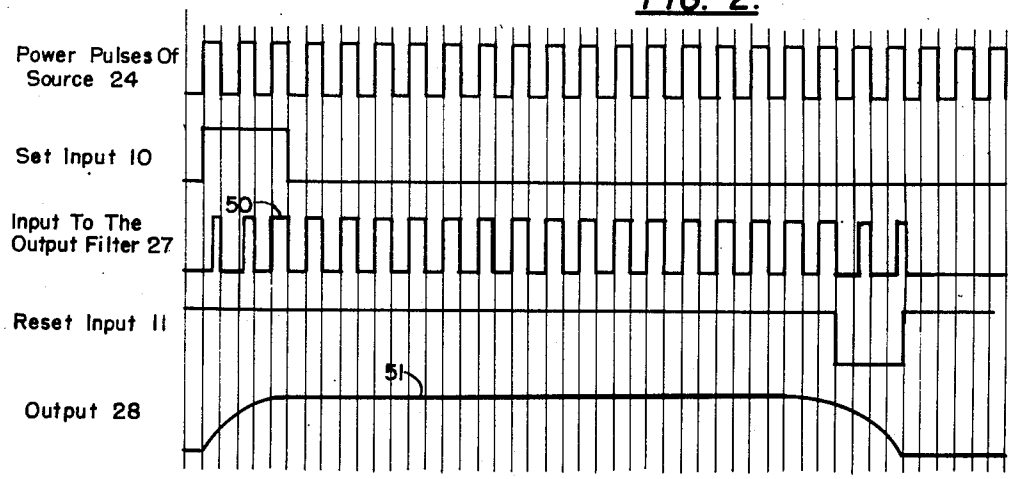

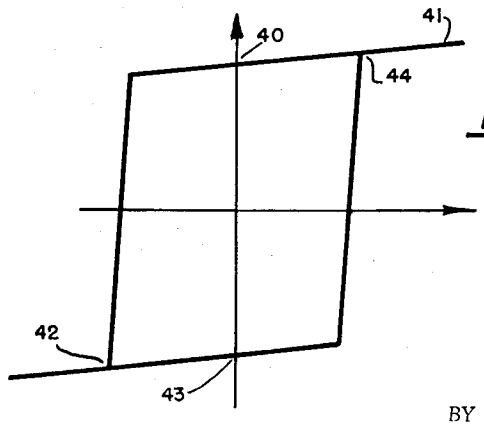

FIG. 3.

INVENTOR

JOHN PRESPER ECKERT, JR.

BY

ATTORNEY

United States Patent Office 2,901,733 Patented Aug. 25, 1959

2,901,733

SINGLE ENDED CARRIER TYPE MAGNETIC AMPLIFIER BISTABLE DEVICE

John Presper Eckert, Jr., Philadelphia, Pa., assignor, by mesne assignments, to Sperry Rand Corporation, New York, N.Y., a corporation of Delaware

Application October 1, 1954, Serial No. 459,631

14 Claims. (Cl. 340—174)

This invention relates to bistable devices and more particularly to such devices which embody carrier type magnetic amplifier circuits. The device is particularly useful in connection with computer circuits.

It is customary in computer circuits to employ vacuum tubes and other devices likely to burn out as the principal components of the bistable devices. It is therefore an object of this invention to provide a bistable device in which devices likely to burn out are reduced to a minimum.

Another object of the invention is to provide a bistable device which is simple in construction and effective in operation.

Still another object of the invention is to provide a bistable device employing carrier type magnetic amplifiers in order to secure the advantages of such magnetic amplifiers.

Another object of the invention is to provide a bistable circuit that does not require a delay device as is the practice in the prior art.

A still further object of the invention is to provide a bistable device in which there is faster response, following a predetermined input signal, than has been possible with prior art bistable devices employing magnetic amplifiers.

Another object of the invention is to provide a bistable device in which the input pulse need not appear at any particular time in order to perform its function.

Briefly speaking, the invention in one form employs a saturable core. Spaced power pulses are fed through a first winding on the core and in the absence of other magnetizing force, the core is saturated by a succession of these pulses. The impedance of said winding is low when the core is substantially saturated. There is, however, additional means for passing a reset current through said winding which resets the core during the spaces between power pulses and normally causes the core to operate on unsaturated portions of the hysteresis characteristic thereof, whereby normally said winding has high impedance and there is very little current flow therethrough.

There is a second or input winding on the core for receiving current to cancel the resetting effect hereinabove mentioned. The novelty resides in the combination of a gating circuit and a feedback path connected to said input winding, all so arranged that in response to the first "set input" pulse the resetting effect hereinabove mentioned is cancelled by current through said input winding. This causes the first-named winding to have low impedance and allows pulses of large amplitude to flow to the load and through said feedback circuit. The feedback circuit supplies additional pulses to the said input circuit and causes the apparatus to continue in a stable recycling state until a reset input pulse is received. A reset input pulse acts on said gating circuit and cancels the effect of the feedback path, thereby stopping flow of current through the aforesaid input winding. This allows the aforesaid resetting means to again reset the

core and cause the core to operate on the unsaturated portions of its hysteresis loop. Consequently, the device has two stable states. The circuit is hereinafter more fully described.

In the drawings:

Figure 1 is a schematic diagram of the preferred form of the invention.

Figure 2 is a timing wave diagram of the device of Figure 1; and

Figure 3 is an idealized hysteresis loop for the core material **23** of the Figure 1.

In Figure 1, there are two inputs, namely "set" input **10** and "reset" input **11**. These inputs feed a gating circuit which includes a battery **12**, the negative side of which is grounded and the positive side of which is connected through a resistor **13** to the anodes of rectifiers **14** and **17**. Current from the battery **12** normally flows through resistor **13**, rectifier **14**, resistor **15**, to the negative pole of battery **16**, the positive pole of which battery is grounded. Battery **12** is so related to resistor **13** and battery **16** is so related to resistor **15** that in the absence of signals on wires **10** and **11** or on feedback wire **29**, substantially all of the potential of battery **16** appears across resistor **15**, and substantially all of the potential of battery **12** appears across resistor **13**. It follows that the anode of rectifier **14** is essentially at ground potential, although there is a current flowing through the path **12—13—14—15—16**.

In the normal state which has just been described, the anode of rectifier **14** is at ground potential, and the rectifier **17** is cut off since its anode is likewise held at ground potential whereas its cathode is held at a positive potential. The cathode of rectifier **17** is connected through resistor **18** to the positive pole of battery **19**. Therefore, in the normal or inactive state of the apparatus, the anodes of rectifiers **14** and **17** will be at substantially ground potential, there will be no current flow in rectifier **17** while there will be a current flow along the path **12—13—14—15—16**.

If now an input pulse appears at the set input **10**, it will flow through the rectifier **20** and raise the potential of the cathode of rectifier **14** to a positive value well above ground. This will cut off the rectifier **14** and allow a flow of current from the battery **12** through resistor **13**, input network **21**, coil **22**, to ground. The coil **22** is a control or input winding of a carrier type magnetic amplifier which has a saturable core **23** having a substantially square wave hysteresis loop, as shown in Figure 3.

There is a source of spaced power pulses **24** feeding current through rectifier **25** to the power winding **26** and thence through output filter **27** to the output **28** and to the feedback connection **29** which is connected by way of rectifier **30** to the cathode of rectifier **14**. The generator of spaced power pulses **24** preferably, but not necessarily, has an output as shown in the upper horizontal column of Figure 2. During the spaces between power pulses of source **24**, there is a flow of current tending to reset the core as will hereinafter be explained. This current flows from ground through rectifier **34**, coil **26**, resistor **32**, to the negative pole of battery **31**.

In the normal "off" position of the apparatus, it is assumed that there is no substantial flow of current in the input coil **22**. Consequently, during the spaces between pulses of source **24** there is the reset current flowing as just mentioned, namely, from ground through rectifier **34**, coil **26**, resistor **32** to the negative pole of battery **31**. This current tends to move the core in a negative direction, that is from point **40** on its hysteresis loop to point **42**, as shown in Figure 3. The power pulses from source **24**, passing through rectifier **25**, coil **26**, resistor **33**, and

battery 31 tend to drive the core in a positive direction, namely, from point 42 to point 43 to point 44 on the hysteresis loop of Figure 3.

It is understood therefore that in the normal operation of the device, the core 23 will be operating along unsaturated portions of the hysteresis loop thereof, since the pulses from source 24 will tend to drive the core positively and the reset current due to battery 31 flowing through resistor 32 will tend to drive the core in the negative direction, and as a result the core is never driven into saturation. If, however, current flows through the input winding 22, it will partly cancel the magnetizing force of the reset current (due to battery 31 and flowing through resistor 32) and as a result, the magnetizing forces on the core due to the spaced power pulses of source 24 flowing through power winding 26 will drive the core to saturation, that is to point 41 on the hysteresis loop of Figure 3, during a portion of the duration of each power pulse, and thereupon the coil 26 will assume a low impedance state. Further power pulses from source 24 will then flow through winding 26, filter 27, to the output 28 and also through the feedback path 29 and rectifier 30 to the cathode of rectifier 14.

In order to understand the operation of the overall circuit, it may be assumed at the start that the magnetic amplifier is in its inactive state, that is there is no current in the input coil 22, and that the flow of power pulses from generator 24 through the coil 26 tends to drive the core positively along the unsaturated portions thereof and during the spaces between power pulses the reset current of battery 31 flowing through resistor 32 tends to reset the core, whereby the core is always operating along unsaturated portions thereof. The gate 12 to 19 inclusive is in its inactive state as heretofore mentioned wherein the anodes of rectifiers 14 and 17 are at ground potential. A "set" input pulse from input 10 passing through rectifier 20 will raise the potential at the cathode of rectifier 14 above ground and cause the gate to become conducting, whereupon current will flow from battery 12 through resistor 13, to input network 21 and coil 22. This will partly cancel the effect of the reset current due to battery 31, and, as shown in Figure 2, the current 50 in the output filter 27 will build up.

Since the output filter in one typical form of the invention comprises a condenser, the current in the load and in feedback 29 will build up steadily, as shown in Figure 2, to a steady maximum value and will appear in that form at the output 28. That same direct curfent output potential will be impressed upon feedback wire 29, whereby current will flow through rectifier 30 to the cathode of rectifier 14 and hold it at the aforesaid positive value and thus continue to cut off rectifier 14 and enable current to continue to flow from battery 12 through resistor 13, input network 21 and coil 22 to ground. This will continue to cancel the effect of the reset current of battery 31 and power pulses from source 24 will continue to flow through coil 26 and output filter 27 to the output 28 and the feedback path 29. The apparatus will continue in this stable state until a negative going pulse is received at the "reset" input 11. This negative pulse will hold the cathode of rectifier 17 at ground potential, and will thereby reduce the potential on wire 35 to ground potential. This will terminate the flow of current through input winding 22 and allow the reset current of battery 31, flowing through resistor 32, to again drive the core negatively and prevent saturation thereof by the pulses from source 24. Consequently, the device will be restored to its original state.

The exact mode of operation of the device during the short period during and following the existence of a pulse at set input 10 depends somewhat on the amplitude and duration of that pulse. If the pulse is of large amplitude and duration as compared to the duration of the power pulses of source 24, the apparatus will operate as hereinabove described. On the other hand, if the pulse is of short duration or of small amplitude, or of both, the device may assume a slightly different mode of operation at the beginning of the stable state which follows the set input pulse. If the set input pulse 10 is of such small amplitude that it does not raise the cathode of rectifier 14 high enough so that the full potential of battery 12 is applied to coil 22, or if the set input pulse is of such short duration that the potential of battery 12 is applied to the input coil 22 for only a short period, the apparatus would operate as follows. The small input applied to control winding 22 will be sufficient to prevent the resetting current of battery 31 from driving the core from point 40 to point 42 on the hysteresis loop of Figure 3. The core might however be reset to some point closer to point 40 than to point 42, at the beginning of the next power pulse from source 24. The next positive power pulse will therefore quickly drive the core to point 44 on the hysteresis loop from which it will proceed to saturation 41 before the termination of the power pulse. Hence, after the core reaches the point 44, the coil 26 will have low impedance and there will be a pulse in the output. Such pulse will be of the same amplitude as the pulses 50 but of shorter duration. These pulses will be filtered and fed through feedback path 29 and rectifier 30 to the cathode of rectifier 14 and will open gate 12–16 and again cause flow of current from battery 12 through the input coil 22. Since the magnetic amplifier has an amplifying effect, these successive pulses will increase the potential 51 and that fed back to the cathode of receifier 14. As a result, the flow of current through coil 22 becomes larger and larger with each pulse, whereby the pulses in the output of coil 26 become wider and wider as the operation continues until finally they have the same width as the pulses from the source 24 at which time the potential at the output 28 is built up to its maximum value 51.

Since the input network 21 may have substantial inductance, even if the input pulse received at the set input 10 has an amplitude equal to the maximum amplitude of pulse 51, and even though the duration of the input pulse is long, the first few output pulses from coil 26 may have shorter duration than the power pulses of source 24. This follows from the fact that it may take some time after the potential of the battery 12 is impressed at the input of network 21 before the output potential of that network rises to its final value. In the meanwhile, the core 23 would be partially reset and consequently output pulses, of narrower width than normally appear, flow from coil 26.

If the input pulse fed to inputs 10 and 11 have substantially greater duration than the width of the power pulses, they need not be timed to occur during the spaces between power pulses.

The input network 21 may be any of a multitude of devices known in the art which have the property of presenting a low impedance at the relatively low frequency of the pulses received at inputs 10 and 11 and presenting high impedance to the higher carrier frequency of the source 24. Examples of such an input network include: a simple inductor; a parallel resonant LC circuit; and a suitable π section filter. Suitable filtering means are also shown in more detail in the prior copending application of John Presper Eckert, Jr., Theodore H. Bonn and Robert P. Talambiras, Serial No. 446,095, filed July 27, 1954, now U.S. Patent No. 2,798,168, entitled "Magnetic Amplifier and Flip-Flop Circuit Embodying the Same," assigned to the same assignee as the present application. The aforesaid prior copending application also illustrates a suitable output filter 27. The latter filter in its most elementary form is a simple condenser having its opposing plates respectively connected to the lower end of coil 26 and to ground; although it may also have an inductor in series with the output lead. Any suitable smoothing filter may be employed at 27.

The magnetic amplifier is of the so-called non-com-

plementing type, that is, it is one which gives no output except in response to energization of its input. Its core 23 may be of any of a wide variety of materials, among which are the various types of ferrites and the various magnetic tapes, including Orthonik and 4–79 Moly-Permalloy. These materials may have different heat treatments to give them different properties. The magnetic material employed in the core should preferably, though not necessarily, have a substantially rectangular hysteresis loop, as shown in Figure 3. Cores of this character are now well known in the art. In addition to the wide variety of materials available, the core may be constructed in a number of geometries including both closed and open paths; for example, cup-shaped cores, strips, and toroidal shaped cores are possible. Those skilled in the art understand that when the core is operating on the horizontal (or substantially saturated) portion of its hysteresis loop, the core is generally similar in operation to an air core in that the coil on the core is of low impedance. On the other hand, when the core is operating on the vertical (or unsaturated) portions of the hysteresis loop, the impedance of the coils on the core will be high.

I claim to have invented:

1. A bistable device comprising a non-complementing carrier type magnetic amplifier having a source of spaced power pulses for energizing the same, and also having an input, a set input, a reset input, feedback means energized by the output of said amplifier and control means energized by the set input, the reset input, and the output of the feedback means for energizing the input of the magnetic amplifier in response to energization of the set input and which will continue to energize the input of the magnetic amplifier while the feedback means is energized until the reset input is energized at which time the input of the magnetic amplifier will be deenergized, the duration of each set input signal being long compared to the duration of each power pulse, said control means comprising a diode gate having two inputs one of which is fed by both said set input and said feedback means, a resistor having one end thereof connected to the other input of said diode gate, means applying potential to the other end of said resistor whereby said gate normally conducts, the other input being a reset input which is connected to the second-named gate input.

2. A bistable device comprising a source of spaced pulses; a set input for receiving signals which are of long duration compared with the duration of said pulses; carrier type non-complementary magnetic amplifier means having a control input, a power input, and an amplifier output; said power input being connected to said source of pulses; a diode gate having two inputs and an output, the first of said gate inputs being connected to said set input; a reset input connected to the other one of the inputs of the diode gate; means connecting the output of the diode gate to said control input; and feedback means connecting said amplifier output to the first input of the diode gate to maintain the device in a first stable state until it is reset.

3. A bistable device as defined in claim 2 having means connected to the first-named output for smoothing out the pulsations in the output signal.

4. A bistable device as defined in claim 2 having means between the output of the diode gate and said control input for allowing pulses of the duration of the set input pulses to pass from the gate to the control input but blocking pulses at the frequency of said spaced pulses from flowing from the control input to the diode gate.

5. A bistable device comprising carrier type magnetic amplifier means having an input and an output, means for energizing said amplifier means with a train of spaced power pulses, a set input having control signals which have long duration as compared with the duration of said power pulses, a reset input, and means for controlling said carrier type magnetic amplifier means to allow the train of power pulses to flow to the amplifier means output in response to a predetermined condition at said set input and to continue to allow the train of power pulses to flow until a predetermined condition occurs at the reset input, the last-named means including a gate having two inputs and an output, said two gate inputs being respectively controlled by separate sources of set and reset signals, the output of said gate being coupled to the input of said amplifier means.

6. A bistable device as defined in claim 5 in which the last-named means includes feedback means from the output of said amplifier means to that gate input which is controlled by the set input.

7. A bistable device comprising a saturable core having a substantially rectangular hysteresis loop, input and power windings on said core, a source of spaced power pulses in series with the power winding and operative, in the absence of resetting magnetizing force, to drive the core to saturation thereby to lower the impedance of the power winding and allow large amplitude power pulses to flow therethrough, means for normally applying a resetting magnetizing force to the core during the spaces between the power pulses, a set input, a reset input, feedback means for adding the output of the power winding to the signals received at the set input, control means fed by the set input and the feedback means to energize said input winding and cancel the resetting magnetizing force when signals appear at the set input or at the feedback means and which inhibits flow of current in the input winding in response to energization of the reset input, the duration of the set input and reset input signals being long as compared with the duration of said power pulses, filter means between said control means and the input winding to allow set input and feedback signals to flow to said input winding but to block flow of any of the power pulses induced in the input winding to said control means, said control means comprising a first rectifier having its anode connected to the set input, a second rectifier having its cathode connected to the cathode of the first rectifier and also to the feedback means, a first resistor connected at one end to the cathode of the second rectifier, means for applying negative potential to the other end of the first resistor, a second resistor one end of which is connected to the anode of the second rectifier, means for applying positive potential to the other end of the second resistor, means connecting said anode of the second rectifier to said filter means, a third rectifier having its anode connected to the anode of the second rectifier, a third resistor one end of which is connected to the cathode of the third rectifier, and means for applying a positive potential to the other end of the third resistor, the reset input being connected to the cathode of the third rectifier; said resistors and potentials having such relative values that a positive pulse at the set input will cut off the second rectifier and cause current to flow through the second resistor to the filter means while a negative pulse on the reset input will interrupt flow of current through the second resistor to the filter means.

8. In a magnetic amplifier, a core, a first winding on the core, a source of power pulses feeding said winding, output means connected to receive the power pulses that pass through said winding, a second winding on the core, input means for energizing the second winding thereby to control the saturation state of said core to in turn control the passage of said power pulses to said output means, said input means comprising a pair of diodes having a common one of their electrodes connected to one another and to said second winding, one of said diodes being normally conductive and the other of said diodes being normally non-conductive, a current source coupled to said common electrode connection whereby the current from said source normally flows through said con-

ductive diode rather than through said second winding, a first signal source for selectively cutting off said conductive diode thereby to cause current to flow from said current source through said second winding, and a second signal source for selectively rendering said normally non-conductive diode conductive thereby to alter the potential of said common electrode connection whereby said current source is operatively disconnected from said second winding.

9. The combination of claim 8 including feed-back means coupling said first winding to said normally conductive diode whereby the state of conductivity of said normally conductive diode is controlled by the magnitude of power pulses passing through said first winding.

10. In a control circuit, a magnetic amplifier comprising a core of magnetic material having first hand second windings thereon, a source of spaced power pulses coupled to one end of said first winding tending to drive said core into saturation in a predetermined orientation, output means coupled to the other end of said first winding, a bias supply coupled to said second winding for normally producing a magnetomotive force in opposition to said power pulses whereby said core normally remains unsaturated, and signal input means for selectively nullifying the magnetomotive force of said bias supply thereby to permit said power pulses to drive said core into saturation whereby outputs appear at said load, said signal input means comprising a pair of diodes connected substantially in parallel with one another, one of said diodes being normally conductive and the other of said diodes being normally non-conductive, a current source coupled to said pair of diodes and to said second winding, the current from said source normally flowing through said conductive diode whereby said source is normally operatively disconnected from said second winding, and signal control means operative to selectively cut off said conductive diode and operative to selectively render conductive said non-conductive diode thereby to control the effective connection and disconnection of said current source to said second winding.

11. A bistable device comprising a non-complementing magnetic amplifier having an input and an output, a pair of diodes having a common one of their electrodes connected to one another, means coupled to said diodes for rendering one of said diodes normally conductive and the other of said diodes normally non-conductive, means coupling said common electrode connection to said amplifier input whereby the potential of said common

electrode connection and the signal state at said amplifier input varies with variations in the states of conductivity of said diodes, and means for controlling the relative states of conductivity of said diodes comprising a pair of signal control sources coupled to said pair of diodes respectively, and feedback means coupling said amplifier output to one only of said pair of diodes.

12. The bistable device of claim 11 wherein said amplifier comprises a carrier type magnetic amplifier energized by a source of pulses having a repetition rate substantially higher than that of said signal control sources, said feedback means including filter means for preventing the coupling of signals, at said energization pulse rate, to said one diode.

13. The combination of claim 12 including further filter means between said common electrode connection and said amplifier input.

14. In combination, a non-complementing amplifier having an input and an output, a signal responsive input circuit coupled to said amplifier input for selectively controlling the potential at said amplifier input thereby to vary said amplifier output, feedback means coupling said amplifier output to said signal responsive input circuit whereby said amplifier exhibits bistable operation, said input circuit comprising a control line coupled to said amplified input and having a potential source coupled thereto, a pair of diodes coupled to said control line whereby the states of conductivity of said diodes control the effective potential of said line and of said amplifier input, bias means coupled to said diodes for maintaining one of said diodes normally conductive and the other of said diodes normally non-conductive, and signal means coupled to said diodes for selectively rendering said normally conductive diode non-conductive thereby to effect one of said amplifier bistable states, and for selectively rendering said normally non-conductive diode conductive thereby to effect the other of said amplifier bistable states.

References Cited in the file of this patent

UNITED STATES PATENTS

2,574,438	Rossi et al.	Nov. 6, 1951
2,709,225	Pressman	May 24, 1955
2,709,798	Steagall	May 31, 1955

OTHER REFERENCES

AIEE Transactions, Part I, Communications and Electronics, pp. 442–446, January 1953.