(No Model.) 5 Sheets—Sheet 1.

P. T. COFFIELD & C. H. PAXSON.

GAS ENGINE.

No. 456,284. Patented July 21, 1891.

Fig. 1.

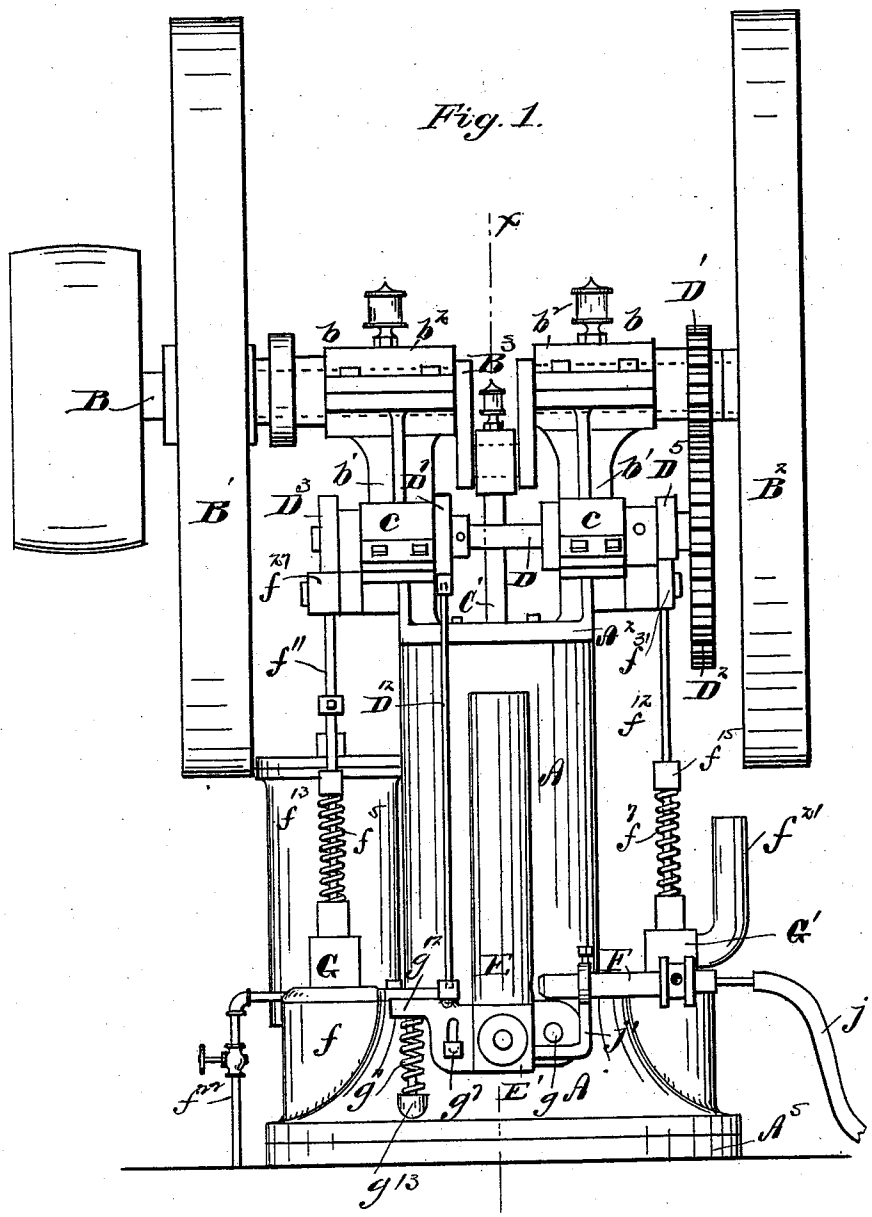

WITNESSES:

Chas. J. Welch

F. M. Jones

INVENTORS

Peter T. Coffield

and Charles H. Paxson

BY

Whittemore & Shepherd

ATTORNEYS

THE NORRIS PETERS CO., PHOTO-LITHO., WASHINGTON, D. C.

(No Model.) 5 Sheets—Sheet 2.

P. T. COFFIELD & C. H. PAXSON.

GAS ENGINE.

No. 456,284. Patented July 21, 1891.

Fig. 2.

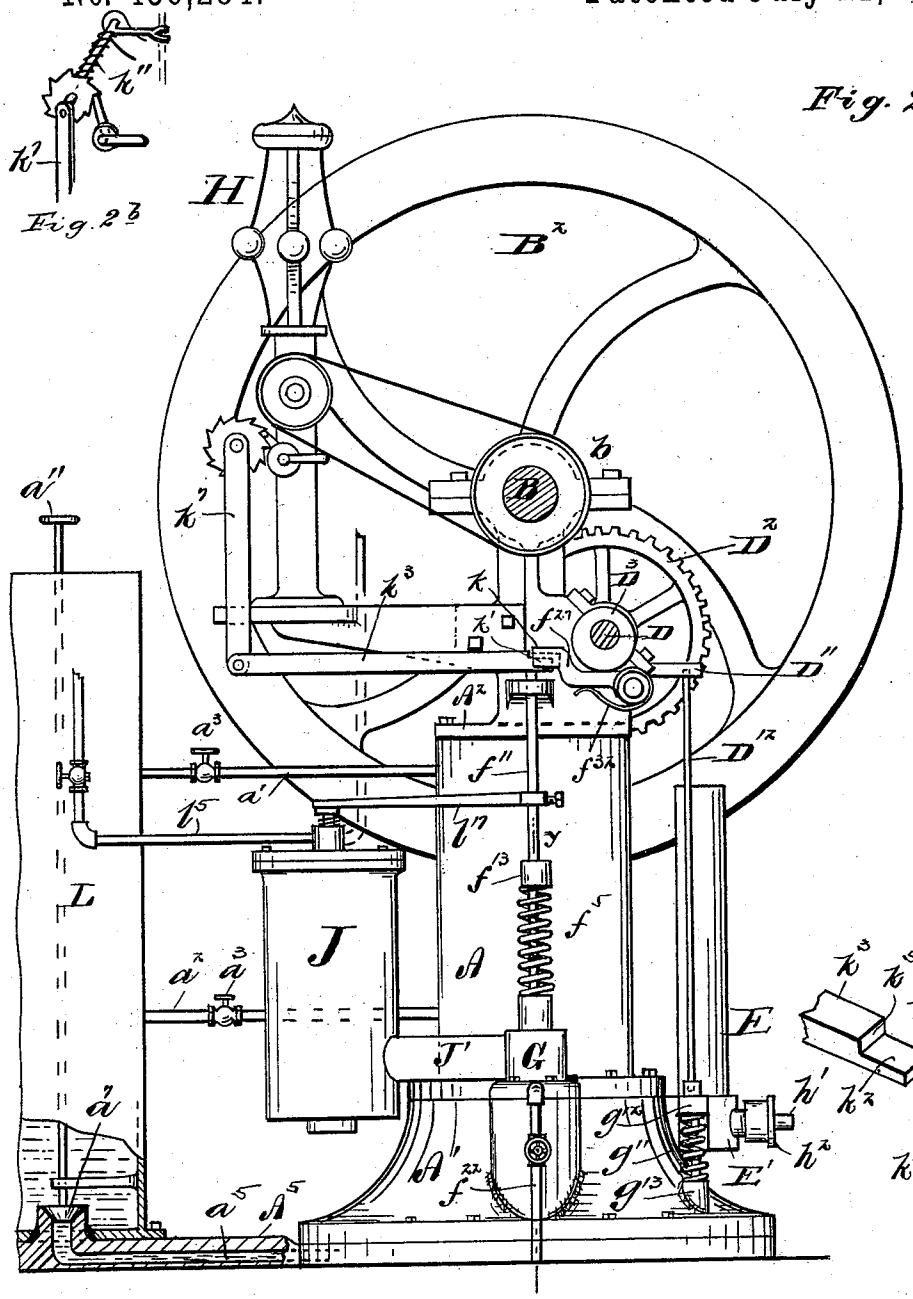

Fig 2a

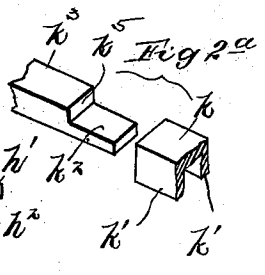

WITNESSES:

Chas. I. Welch

F. M. Jones

INVENTORS

Peter T. Coffield

and Chas. H. Paxson

BY

Philip and Shepherd

ATTORNEYS

THE NORRIS PETERS CO., PHOTO-LITHO., WASHINGTON, D. C.

(No Model.) 5 Sheets—Sheet 3.

P. T. COFFIELD & C. H. PAXSON.

GAS ENGINE.

No. 456,284. Patented July 21, 1891.

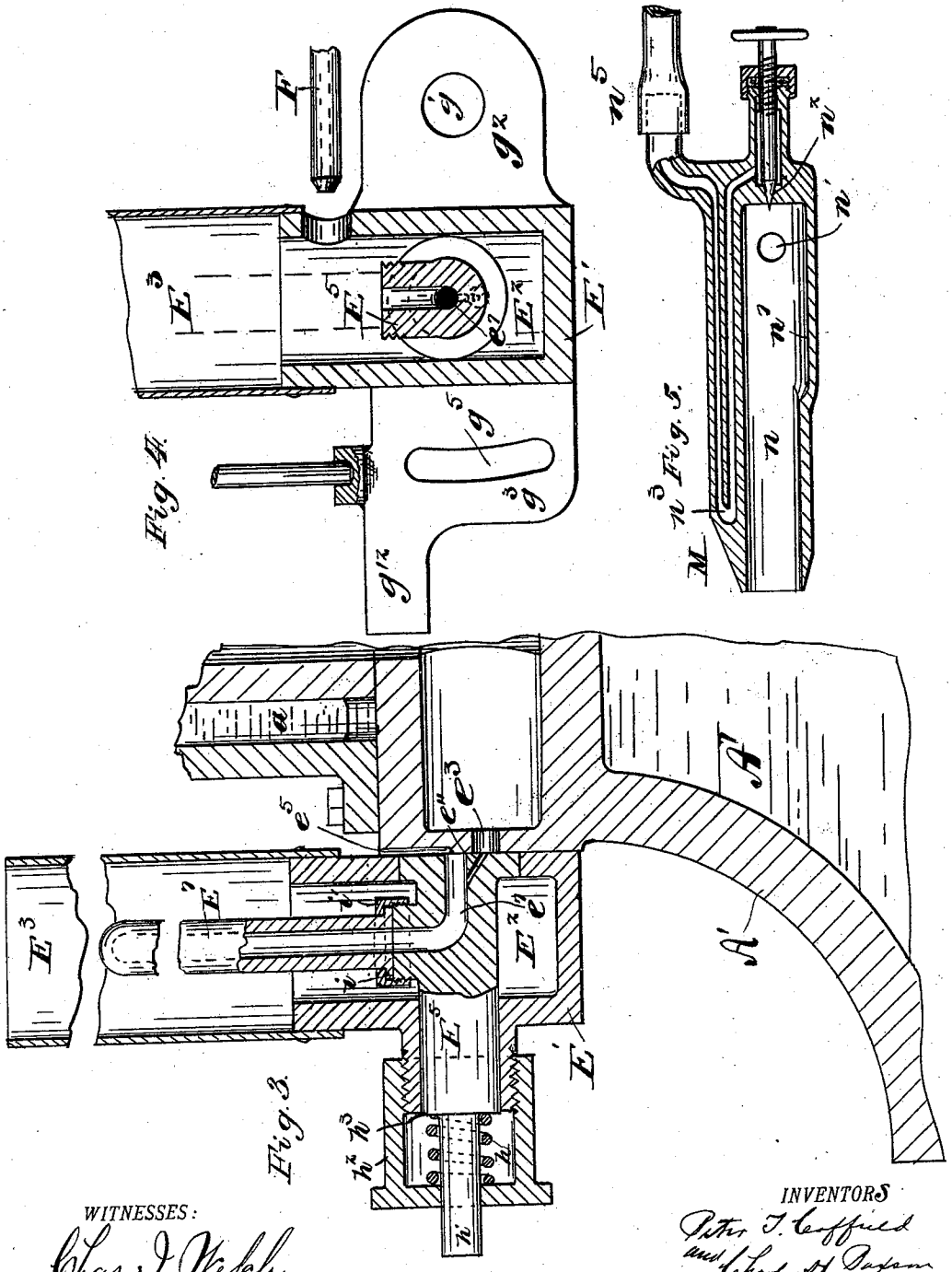

Fig. 4.

Fig. 5.

Fig. 3.

WITNESSES:

Chas. J. Welch

F. M. Jones

INVENTORS

Peter T. Coffield

and Charles H. Paxson

BY Whiteley & Shepherd

ATTORNEYS

THE NORRIS PETERS CO., PHOTO-LITHO., WASHINGTON, D. C.

(No Model.) 5 Sheets—Sheet 4.

P. T. COFFIELD & C. H. PAXSON.

GAS ENGINE.

No. 456,284. Patented July 21, 1891.

Fig. 6.

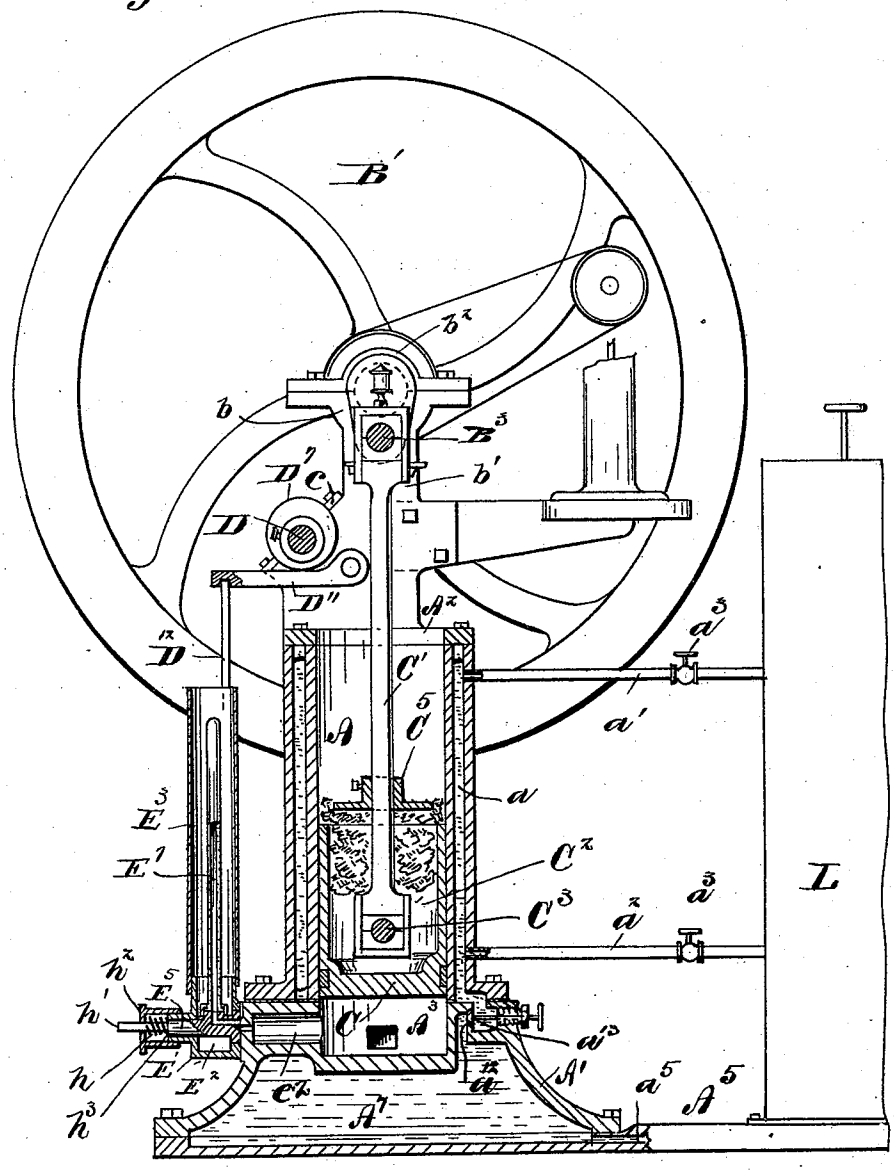

WITNESSES:

Chas. I. Welch

F. M. Jones

INVENTORS

Peter T. Coffield

and Charles H. Paxson

BY

Philip Mc Shepherd

ATTORNEYS

THE NORRIS PETERS CO., PHOTO-LITHO., WASHINGTON, D. C.

(No Model.) 5 Sheets—Sheet 5.

P. T. COFFIELD & C. H. PAXSON.

GAS ENGINE.

No. 456,284. Patented July 21, 1891.

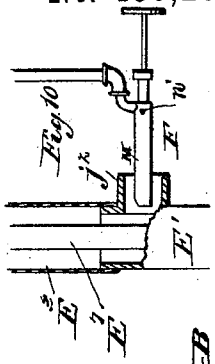

Fig. 10.

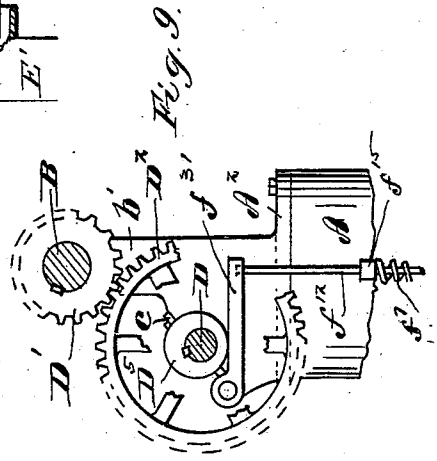

Fig. 9.

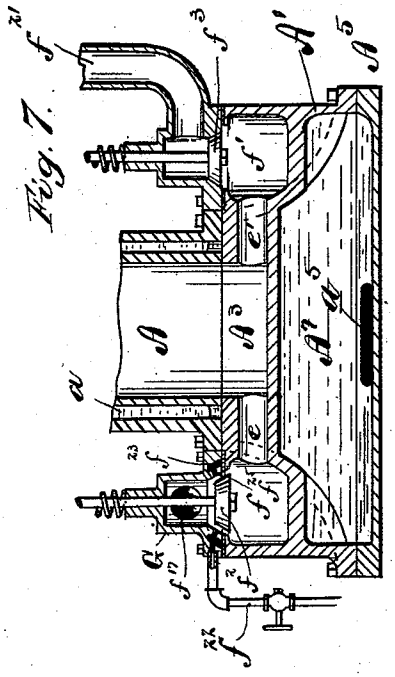

Fig. 7.

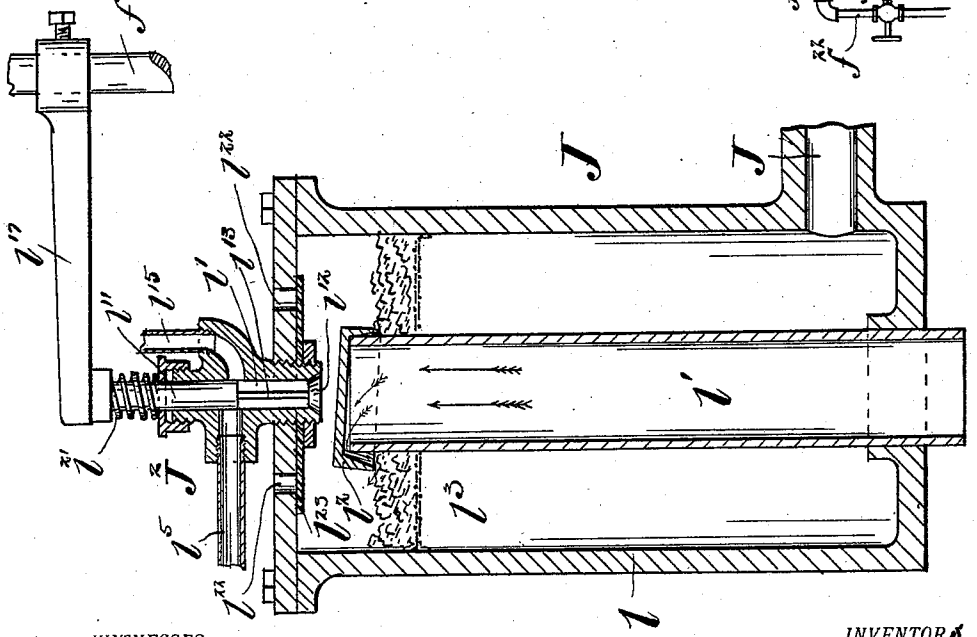

Fig. 8.

WITNESSES:

Chas. I. Welch

F. M. Jones

INVENTORS

Peter T. Coffield

and Chas. H. Paxson

BY Baker and Shepherd

ATTORNEYS

THE NORRIS PETERS CO., PHOTO-LITHO., WASHINGTON, D. C.

UNITED STATES PATENT OFFICE.

PETER T. COFFIELD AND CHARLES H. PAXSON, OF SPRINGFIELD, OHIO, ASSIGNORS TO THE SPRINGFIELD GAS ENGINE COMPANY, OF SAME PLACE.

GAS-ENGINE.

SPECIFICATION forming part of Letters Patent No. 456,284, dated July 21, 1891.

Application filed December 16, 1890. Serial No. 374,884. (No model.)

To all whom it may concern:

Be it known that we, PETER T. COFFIELD and CHARLES H. PAXSON, citizens of the United States, residing at Springfield, in the county of Clark and State of Ohio, have invented certain new and useful Improvements in Gas-Engines, of which the following is a specification.

Our invention relates to that class of gas-engines adapted to be operated by ordinary city or illuminating gas or by gasoline or other hydrocarbon vapors.

The object of our invention is to provide a gas-engine of simple construction adapted to be operated by any well-known hydrocarbon vapor or other similar substance adapted to form an explosion when mixed with the proper quantity of air and ignited; and the special object of our invention is to provide means for obtaining a rapid firing or exploding of the inflammable or explosive charge.

A further object of our invention is to provide a novel arrangement of the inlet and discharge valves in connection with a firing and exploding valve.

A further object of our invention is to provide novel means for producing a hydrocarbon vapor from gasoline or similar material and to regulate the quantity admitted at each charge.

To this end our invention consists in the employment of an auxiliary or independent firing or exploding chamber adapted to be brought into communication with the main exploding chamber or cylinder, so as to fire the main charge by a preliminary explosion in the auxiliary firing or exploding chamber.

Our invention further consists in the various constructions and combination of parts hereinafter described, and pointed out in the claims.

In the accompanying drawings, which form a part of this specification, Figure 1 is a front elevation of an engine embodying our invention. Fig. 2 is a side elevation of the same, one of the fly-wheels being removed and some of the parts shown in section to better illustrate the construction and operation of the parts. Fig. 2^a is a detail in perspective and partly in section of a part of the valve-gear referred to hereinafter. Fig. 2^b is a small diagrammatic view, also in perspective, illustrating a portion of the governor attachments as applied to the valve-gear. Fig. 3 is a vertical sectional elevation of a portion of the main cylinder and the exploding-valve. Fig. 4 is a detail, also partly in section, of a portion of the same. Fig. 5 is a longitudinal sectional view of a generating-burner adapted to be used in connection with the exploding-valve when operating with gasoline or similar hydrocarbon fluids. Fig. 6 is a vertical sectional elevation of the device on the line $x\,x$ in Fig. 1. Fig. 7 is a vertical sectional elevation of a portion of the cylinder and the outlet and inlet valves, taken on the line $y\,y$ in Fig. 2. Fig. 8 is a sectional elevational view in detail of the carburetor used with gasoline or similar hydrocarbon fluids. Fig. 9 is a detail showing a portion of the valve-gear and its operating mechanism. Fig. 10 is a detail of a modification.

Like parts are indicated by similar letters of reference throughout the several views.

In the said drawings, A represents the main cylinder, B the main shaft, and B′ B^2 fly-wheels on the main shaft, two of which are preferably used, one on each side of the cylinder A.

C is a piston adapted to fit in the cylinder A and reciprocate therein in the ordinary manner, the reciprocating motion of said piston being communicated to the shaft B as a rotary motion through the medium of a pitman connection C′ and a crank B^3.

The type of engine which we have represented in the drawings and to which the description especially relates is known as a "vertical" engine; but we wish it to be understood that all of the constructions herein described may be applied equally well to any other form of engine, horizontal or otherwise, as well as to engines of the vertical type.

The main cylinder A is located on a hollow base A′ and is formed with an outer casing or jacket with an inner water-space a within the same and surrounding the main cylinder A. This water-space a is adapted to communicate with the hollow base A′ at the bottom in the manner hereinafter more fully

described, and is closed at the top with an annular cap or cover A^2, on which the main bearings b b of the main shaft B are supported, said bearings being preferably cast integral with the cap A^2 through the medium of supports b', the bearings having detachable covers or caps b^2, in the usual manner, to permit the shaft B to be inserted therein or removed therefrom.

Located above the cylinder A, and preferably supported from the bearing-supports b' in suitable bearings c, is a counter-shaft D, arranged parallel with the main shaft B and geared directly thereto, preferably through the medium of a spur-pinion D' and a spur-gear D^2, the pinion D' being of the proper relative size with reference to the gear D^2 to cause the shaft D to revolve at one-half of the speed of the main shaft B.

As before stated, the main cylinder A is supported on a hollow base A', the parts being connected together in any suitable manner. Within this base A' are formed what we term the "compression-chamber" A^3, the "supply and exhaust ports" e and e', and the "valve-chambers" f and f', the compression-chamber A^3 being adapted to form a continuation of the main cylinder A', and the supply and exhaust ports e and e' forming a communication with said compression-chamber and with the respective valve-chambers f and f', the said base being hollow or cored out around the said valve-chambers, ports, and compression-chamber, so as to form a large water-receiving space A^7 about said parts.

The supply of vapor or explosive mixture is admitted to the cylinder A through a valve f^2, and the products of combustion are discharged from the cylinder after the explosion through an exhaust-valve f^3, these valves being operated by cams D^3 and D^5 on the shaft D in a manner hereinafter more fully specified. As before stated, the shaft D runs or revolves at one-half the speed of the main shaft B. Hence the cams D^3 D^5 are adapted to operate against the valves f^2 f^3 at each alternate revolution of the shaft B, the cams being so located on the shaft that the opening of the exhaust-valve occurs at each alternate revolution of the shaft B at the time the piston begins its downward movement, the exhaust-valve being adapted to close and the supply-valve open during the same revolution as the piston begins its upward stroke, both valves being closed during the following downstroke, so as to produce a compression of the charge within the compression-chamber A^3 in the well-known manner.

Leading from the compression-chamber A^3, preferably at right angles to the plane or axis of the ports e and e', is a third passage or port e^2, which communicates with the exploding-valve E. This valve E consists, essentially, of a pivoted supporting frame or casing E', pivoted to the base A' and adapted to oscillate on a stud g, which extends through a suitable opening g' in an extended ear or flange g^2 on said supporting frame or casing. A flange g^3 on the opposite side of the frame or casing E' is also provided with a curved slotted opening g^5, through which passes a stationary stud or bolt g^7, which is screwed or otherwise rigidly secured in the base A', the studs g and g^7 being adapted to hold the frame or casing E' firmly attached to said base opposite the passage e^2 and at the same time permit said frame or casing to oscillate on the stud g. A spring g^{11}, resting at one end against a projection g^{12} on the frame E' and at the other against a projection g^{13} on the base A', serves to hold said casing normally in a substantially horizontal position, as shown in Fig. 1. The passage e^2, which leads from the compression-chamber A^3, is continued through the outer casing of the base A' in a small opening e^3, the base A' being at this point extended slightly and faced off to form a bearing for the reciprocating frame E', a small groove or passage e^5 being formed in said face extending vertically from a point slightly above the top of the opening e^3 to the top of the base A'. The frame or casing E' is cored or hollowed out to form a chamber E^2, closed at the bottom and extending vertically through said casing and continued at the top in the form of a chimney or heating-tube E^3, preferably of sheet metal, attached in any suitable manner to the frame or casing E'.

Extending through the walls of the frame or casing E', near the bottom thereof, at right angles to the axis of the chamber E^2, is an opening or passage preferably bored out to receive a loose piece E^5, adapted to form the valve proper, the valve being turned or shaped up to fit snugly in transverse openings in the casing E' and close said openings, the valve when in position being extended through the chamber E^2, leaving a space on each side of said valve. This valve E^5 is faced at the end which comes next to the small opening e^3 in the passage e^2 of the base A', and is adapted to be held in close contact with the face surrounding said opening by a spring h, arranged around the projecting end h' of said valve and between a movable cap h^2, adapted to screw on the casing E', and a shoulder h^3 on said valve-piece E^5, means being provided for turning the cap h^2, so as to adjust it to or from the casing E', and thus increase or diminish the tension of the spring h, which serves to hold the valve-piece E^5 with a yielding contact against the face or outer surface surrounding the opening e^3.

Extending into the valve-piece E^5 and adapted, when moved to the proper position, to communicate with the opening e^3 is a passage e^7, which is extended into said valve-piece E^5 in a curved passage, which is extended or continued into what we term the "exploding-tube" E^7, at right angles, or substantially so, to the passage e^7. This exploding-tube E^7 is preferably made of earthenware adapted to stand a high degree of heat,

the most preferable material we have found for the purpose being that from which are formed the tips for gas-burners, known as "lava tips," the tube being formed with an upper closed end and a lower projecting flange i, adapted to be engaged by a clamping-ring i', which secures it to the valve-piece E^5, the parts when in position, as shown in Figs. 3 and 6, being adapted to form a continuous passage from the face of the valve-piece E^5 into the exploding-tube E^7, which tube is located within the chamber E^2 and projects upwardly into the chimney or heating-tube E^3.

The casing or frame E′, which carries the exploding valve and tube, is adapted to be oscillated upon its pivoted connection g by the cam D^7 on the shaft D. As the shaft is revolved this cam D^7 comes in contact with a pivoted arm D^{11}, the movement of which is transmitted to the casing or frame E′ of the exploding-valve by a rod D^{12}. The spring g^{11} serves to move the exploding-valve and the arm D^{11} in opposition to the cam. The connecting-rod D^{12} is secured loosely at each end, respectively, in sockets formed in the pivoted arm D^{11} and the frame or casing E′, the tension of the spring g^{11} being adapted to hold all the parts in their operative positions, the construction being such that the rod D^{12} may be removed at any time by simply compressing the spring g^{11} sufficiently to permit the rod D^{12} to be removed from the sockets in which it is located. The cam D^7 is so placed on the shaft D with reference to the cams D^3 and D^5 that the passage e^7 is brought opposite to the opening e^3 at each alternate piston-stroke just as the piston begins its upward movement after the charge has been compressed, the valve being oscillated so as to bring the passage e^7 opposite the discharge-passage e^5 after the charge has been fired.

Supported in proximity to the exploding-valve and its frame is a burner F, adapted to direct a constant flame into the chamber E^2 and against the exploding-tube E^7. This burner, when ordinary city or illuminating gas is used, may be made in the form of an ordinary Bunsen burner supplied with gas from a suitable supply-pipe j from any convenient source of supply. This burner F may be supported from the casing or frame E′ of the exploding-valve by a suitable support j^2, so as to oscillate therewith, or it may be independently supported, as shown in Fig. 10. When supported upon the oscillating casing, the supply for said burner is secured through a flexible pipe or tube j. When the burner is supported separately from the valve, an opening is provided in the side of the chimney or chamber sufficiently large to permit the oscillating movement thereof with reference to the burner, an annular projecting flange being preferably provided about said opening, into which the burner F projects, so as to insure the proper passage of the heat from said burner into the chamber surrounding the exploding-tube E^7. The burner F is kept burning constantly during the operation of the engine and heats the exploding-tube E^7 to an incandescent or glowing heat. As the charge is compressed by the action of the piston in the manner as above described, a certain amount of the explosive mixture forming said charge is forced into the exploding-tube E^7, where it is instantly heated and fired, forming a premature or supplemental explosion within said exploding-tube, which, as the passage e^7 is brought opposite the opening e^3, is communicated instantaneously to the charge within the cylinder, thus firing said charge and producing an explosion under the piston, giving an impetus thereto.

In order that the firing of the charge may be as rapid as possible, so as to produce a high speed of the piston, we provide an auxiliary passage e^{11}, which extends from the passage e^7 to a point on the face of the valve E^5, slightly below the opening of the main passage e^7 in the direction of the valve travel. This auxiliary opening e^{11} serves the double purpose of assisting in cleaning the exploding-tube from the products of combustion formed therein by each explosion and of filling the same with a fresh supply of the explosive mixture momentarily before the main passage of said tube is brought opposite the opening which communicates with the cylinder. The supply-pipe f^2 and exhaust-valve f^3 are preferably arranged to open downwardly, and are held normally against their seats by springs f^5 f^7, which are preferably located about valve rods or stems f^{11} f^{12} and bear at one end against collars f^{13} f^{15} on said valve-stems and at the other against the normally stationary but removable caps G and G′, which contain the valve-seats and within which the valves are inclosed.

The cap of the supply-valve f^2 is provided with an inlet-opening f^{17}, and the exhaust-valve with an exhaust-opening f^{21}. When the engine is operating with ordinary city or illuminating gas or any other explosive vapor supplied or stored in the form of gas, the inlet-opening f^{17} opens directly to the atmosphere and serves for admitting the air necessary to be mixed with said gas to form an explosive charge, the gas or vapor being admitted through a small pipe f^{22}, which connects with an annular recess f^{23}, located about the valve-seat and within the walls of the removable cap G of the valve-chamber. From this annular recess the gas escapes through small openings f^{25}, which extend from said annular recess to the valve-seat. These openings f^{25} are arranged entirely around the valve, forming a perforated valve-seat, through which the gas is permitted to escape when the valve is opened at an angle to the axis of the valve through which the air passes, so that the air and gas are thoroughly mixed as they are drawn into the cylinder to form an explosive charge, the perforations in

the valve-seat being adapted to be closed by the closing of the valve, which also shuts off the air-supply.

The annular recess f^{23} I preferably form about the valve-seat by coring or turning or otherwise in such a manner that it opens on the face of the cap G, where it connects to the valve-chamber formed in the base A′, so that when the cap G is removed this annular receiving-space is opened, the space being adapted to be closed, save for the perforations, when the cap is secured onto the valve-chamber, a suitable packing material being provided between the parts or the parts ground to form a tight joint to prevent the escape of the gas from the valve-chamber or from said annular recess.

The cams D^3 D^5, which operate the supply and exhaust valves, are adapted to engage with pivoted arms f^{27} and f^{31}, the pivoted arm f^{31} being connected directly to the valve-stem f^{12}, so that the exhaust-valve f^3 is opened at each revolution of said cam. The arm f^{27}, however, is connected to the valve-stem f^{11} by an intermediate connection controlled by the engine-governor, so that while the arm f^{27} receives an oscillating movement at each revolution of the cam D^3 the valve f^2 is open only at such times as the intermediate connection is placed in proper position by means of the governor. A spring f^{32} holds the arm f^{27} in contact with the cam D^3. The arm f^{27} is provided at its outer end with a flat projecting surface k, having side wings k' k', in which is projected a flat end k^2 of a longitudinally-moving bar or lever k^3. The bar or lever k^3 is provided near its outer end with a shoulder k^5, so that the end k^2 is of a thickness considerably less than the main portion of the bar k^3. This bar k^3 rests at this end against the top of the valve-stem f^{11} and is connected at its other end to the outer extremity of a rocking arm k^7, attached to a rock-shaft k^{11}, forming a part of the governor H, the construction of the governor being such that as the weighted levers are thrown out by centrifugal force in the revolution of said governor the arm k^7 is oscillated so as to withdraw the shoulder k^5 from contact with the end of the cam-arm f^{27}, the said oscillating arm k^7 being adapted to move the lever k^3 longitudinally, so that the outer end of the cam-arm f^{27} will engage with the shoulder k^5 when the weighted levers of the governor are allowed to drop by a reduction in the speed of the engine, the construction of the governor and its operating mechanism being such as is well known in the art and forming no part of the invention, any suitable governing mechanism being applicable which will produce the longitudinal movement of the bar k^3. It will be understood from the above that when the bar k^3 is moved longitudinally, so that the end k of the arm f^{27} engages with the shoulder k^5, the valve f^2 will be opened and a charge will be received into the cylinder. If the speed of the engine is such that the bar k^3 is sufficiently withdrawn so that the arm f^{27} does not come in contact with the shoulder k^5, then the supply-pipe remains closed and no explosion takes place.

The operation of the device as thus far described, it is thought, will be apparent. The supply of explosive mixture to form the charge is drawn into the cylinder as the valve is opened by the upward movement of the piston. Upon the downward movement of the piston the charge is compressed within the compression-chamber and a portion thereof is forced into the exploding-tube E^7, which, as before stated, is kept constantly at a high temperature, the exploding-valve being at this time in substantially the position shown in Fig. 3, the explosive mixture being forced gradually into the tube E^7 through the auxiliary passage e^{11}, the exhaust-passage e^5 being still slightly open to the interior of the exploding-tube. Any products of combustion which remain in the tube are thus removed, and as the exhaust-port e^5 is closed by the downward movement of the exploding-valve the tube becomes filled with the explosive mixture at the same pressure as that in the main cylinder, the filling of the tube occurring momentarily before the main passage e^7, leading from said tube, is brought opposite to the opening e^3, communicating with the main cylinder. This premature filling of the tube E^7 through the auxiliary port e^{11} permits the gas to become thoroughly heated in the tube E^7, so that the moment the main passage e^7 is brought opposite the opening e^3 an explosion takes place within said tube, which forces the contents thereof into the main cylinder, producing an instantaneous firing of the charge in said cylinder under the moving piston. The use of this exploding-tube kept normally at a high temperature sufficient to ignite the gases therein and thus form a premature explosion furnishes means for igniting the main charge more rapidly than in any device which to our knowledge has heretofore been devised, and thus permits a higher speed in gas-engines to which it is applied than can be obtained by other means now in common use for igniting the explosive charge in engines of this character. The high speed thus obtained with the rapid firing at each alternate stroke secures an increased capacity for engines of a given size.

In the above description we have described the operation with especial regard to the use of hydrocarbon vapors normally in the form of gas. In operating the engine from liquid hydrocarbon, such as gasoline or similar substances, we preferably provide a carburetor J, which is attached, through a suitable pipe connection J′, to the inlet f^{17} of the supply-valve f^2, the gas-pipe being in this case disconnected or shut off. This carbuetor J consists of an outer casing l, having an inner inlet-tube l', passing through the bottom of the outer casing and projecting therein to within a short distance of the top of said casing, said

tube being open to the atmosphere at the lower end and normally closed at the upper end by a loose cap or cover l^2, which forms the inlet-valve to the carburetor. The pipe connection or outlet from the carburetor J' leads from near the bottom of the outer casing l and communicates with the space between said casing and the inlet-tube l'. This space is preferably filled with suitable loose fibrous material—such as sponges, waste, or other suitable substance—supported on a perforated diaphragm l^3.

Connected to the top of the carburetor J and communicating therewith is a supply-valve J^2, to which the gasoline or other hydrocarbon liquid is conveyed through a suitable pipe connection l^5. This valve J^2 consists of an outer casing having a vertical longitudinal passage l^7, extending through the same, in which a piston l^{11} is inserted and adapted to reciprocate. The lower end of the passage l^7 is closed by a valve l^{12}, connected to the piston l^{11} by a small valve stem or rod l^{13}. In the normal position, with the valve l^{12} closed, the piston l^{11} extends sufficiently above the chamber or passage l^7 to permit the gasoline or other hydrocarbon liquid to flow into said chamber and thus completely fill the same, a small air-passage l^{15} being provided, if desired, to allow the escape of air from said passage and thus permit the complete filling of said chamber, this air-passage, if employed, being provided with a stand-pipe of sufficient height to prevent the liquid hydrocarbon from escaping.

Located on the valve-stem f^{11} is a projecting arm l^{17}, which is connected with or comes in contact with the upper end of the piston l^{11}, which projects through the outer casing J^2 of the valve, and is provided with a spring l^{21}, which holds said piston in its normal position, with the valve l^{12} closed. By this construction, as the supply-valve f^2 is opened by the movement of the valve-stem f^{11}, the valve f^{12} is also opened by the downward movement of said stem, while at the same time the piston l^{11}, entering the chamber l^7, cuts off the supply from the pipe l^5 and discharges the contents of said chamber into the carburetor, the quantity of gasoline or other hydrocarbon fluid admitted at each charge being thus accurately measured, the chamber l^7 being made of sufficient size to contain just enough of the hydrocarbon liquid to form a vapor of a sufficient quality to obtain the best results when fired as an explosive mixture.

In order to obtain a sufficient supply of air and to more thoroughly mix the same with the vapor of the hydrocarbon fluid, I preferably provide the top of the outer casing of the carburetor with perforations l^{22}, normally closed by a flexible valve l^{23}, of leather or other suitable substance, secured at its center to the top of the casing and adapted to open downwardly and permit the air to enter. By this construction it will be seen that the vapor to form the explosive mixture is drawn into the cylinder by the upward movement of the piston from the carburetor. The vacuum formed by the upward movement of the piston opens the valves l^2 and l^{23}, admitting the air into the inner space of the carburetor, where it comes in intimate contact with the hydrocarbon fluid with which the fibrous material of the carburetor is filled, and thus produces a hydrocarbon vapor sufficiently rich to form a highly-explosive charge.

To provide for cooling the cylinder A and to prevent the same from being heated to a high temperature by the rapid firing of the gaseous mixture therein, we place the annular space a surrounding the cylinder in communication with a water-tank L by means of small pipes a' a^2, each provided with suitable stop-valves a^3. The water-tank L is kept constantly filled with water, which, by the location of the pipes a' a^2, is caused to circulate around the cylinder and back into the tank. The hollow base A' is also placed in communication with the water-tank L, preferably through a water-passage a^5, formed in a base-plate A^5, which extends under the hollow base A' and forms the bottom thereof, and is also sufficiently extended to form a support for the water-tank L, the passage a^5 being extended through the bottom of said water-tank and provided with a suitable valve a^7, located within said tank and controlled preferably by a valve-stem a^{11}, which extends up through the tank to a convenient position to be operated. The space within the hollow base A', which surrounds the combustion-chamber A^3 as well as the valves and ports communicating therewith, is adapted to be placed in communication with the annular space a surrounding the main cylinder through an opening a^{12}, controlled by a valve a^{13}, located within said base, suitable means being provided on the outside of said base for the opening and closing of said valve.

It sometimes happens that in starting the engine it is desirable that the combustion-chamber and the valves and ports become heated to a limited extent in order to secure a rapid firing of the charge admitted therein. To accomplish this the valve a^{13} is closed, thus cutting off the circulation of the water within the hollow base, which therefore becomes heated, allowing the combustion-chamber and the valves to remain hot. If the valve a^{13} remains closed, the water within the base will be heated to such an extent that the steam generated therein will force the water back through the passage a^5 to the tank L, so as to have no cooling effect upon these parts whatsoever. This result, however, is accomplished independent of the circulation of the water through the annular space a about the main cylinder, which takes place through the pipes a' a^2. By establishing a communication between the hollow base and the water-space of the cylinder and closing the valve in the intermediate connection

a^2 a circulation is secured through the hollow base as well as around the cylinder, keeping all the parts equally cool. By the construction as thus described it will be seen that the circulation of the water about the cylinder and around the valves and combustion-chamber may be regulated or controlled so that the temperature of the combustion-chamber, ports, and valves may be increased or diminished, as desired, independent of the main cylinder.

The main piston or plunger C is preferably made of considerable length, so as to secure a long bearing within the cylinder, the said piston being hollowed or cored out, forming a chamber C^2. The pitman connection C′ is preferably connected to the piston C by a wrist-pin C^3, located within the chamber C^2, preferably near the bottom thereof.

To provide for lubricating the cylinder A, we place within the chamber C^2 a large sponge or other similar loose fibrous material, packed closely about the pitman connection C′. This sponge or fibrous material is filled with a suitable lubricant, and as the piston is reciprocated the different angular positions assumed by the pitman C′ compress the fibrous material on either side thereof and thus squeeze out the lubricant, which is transferred to the sides of the cylinder and also to the wrist-pin C^3. To further assist in this squeezing process, we preferably provide the pitman connection C′ with an extending flange or collar C^5, arranged slightly above the piston C and adapted, as the pitman changes its angular position, to press down on this fibrous material, which is preferably allowed to project through the top of the chamber C^2 above the piston and in close proximity to or in contact with the sides of said cylinder. The construction thus described furnishes a simple and practically automatic oiler, which keeps the cylinder constantly lubricated.

To provide for heating the exploding-tube when operating the engine with gasoline or other hydrocarbon liquids, we substitute for the ordinary Bunsen burner before described a generating-burner adapted to generate a combustible vapor from the liquid employed. This is accomplished as shown in Fig. 5. An outer casing M is provided with a central passage n, open at one end and provided near the other end with a series of perforations n' in the periphery thereof. At the rear end is a valve n^2, adapted to close a small opening or perforation in the end of the passage n, which opening communicates with a passage or channel n^3, which is extended within the wall of the outer casing M, preferably at the top thereof, the passage being continued for almost the entire length of the outer casing and then doubled back on itself, as indicated in Fig. 5, so as to communicate with a supply-pipe n^5, located preferably at or near the rear end of the outer casing M. The inner longitudinal passage n is preferably provided with a pocket or depression n^7 in the bottom thereof, adapted to contain a small amount of the hydrocarbon liquid for starting the burner.

In the operation of this device a sufficient amount of the hydrocarbon liquid is admitted through the valve n^2 to fill the cup or pocket n^7. This liquid is then lighted and burns within the passage n until the upper wall thereof is heated sufficiently to convert the liquid contained in the passage or channel n^3 into a vapor, after which the valve n^2 is opened and the vapor thus generated is permitted to escape into the passage n, where it becomes mixed with a sufficient amount of oxygen or atmospheric air entering through the openings n' to support the combustion and produce a very hot flame, which issues from the mouth of the passage n within the chamber E^2 of the exploding-valve. The heat of the burning vapor keeps the outer casing M sufficiently hot to constantly generate the incoming vapor, so that a continuous flame is secured.

It is obvious that the various constructions set forth in detail in the description and illustrated in the drawings may be modified in many different ways to suit the different conditions under which the machine is to operate or the pleasure of the operator. Other forms of generators for converting the liquid hydrocarbon into vapor may be employed with equally good results for heating the exploding-tube, or other means may be employed for heating said tube. We do not, therefore, limit ourselves to these special constructions. Different forms of carburetors well known in the art may also be employed with good results for furnishing an explosive hydrocarbon mixture from gasoline or similar hydrocarbon fluids. It is also evident that the details of construction of the operating mechanism for producing different movements for the valves and similar purposes may be variously modified in changing the general form or type of the engine without departing from the spirit of our invention. We do not, therefore, limit ourselves to these special constructions; but

We claim, broadly, as our invention—

1. The combination, with a main cylinder adapted to receive a charge of explosive gaseous mixture, of a normally-heated receptacle having an opening adapted to be brought into communication with an opening in the main cylinder, said receptacle being normally disconnected from the cylinder, means for moving said receptacle to cause it to communicate with the main cylinder, and a small auxiliary passage leading into the receptacle, adapted by the movement of said receptacle to communicate with the main cylinder momentarily before the main opening of the receptacle, substantially as specified.

2. The combination, with a main cylinder and its piston and the supply and exhaust valves adapted to be operated to furnish a charge of explosive gaseous mixture to said cylinder and compress the same therein, of a

movable auxiliary heated closed receptacle having a main passage and an auxiliary passage adapted to be brought successively opposite an opening communicating with the main cylinder, whereby the said auxiliary chamber receives a supply of gaseous mixture from said main cylinder, which is ignited by the heated walls of said chamber, causing a premature explosion, which ignites the charge in the main cylinder, substantially as specified.

3. The combination, with a main cylinder of a gas-engine, of an exploding-valve consisting, essentially, of a normally-heated tube closed at one end and provided at the other with an opening adapted to be brought opposite an opening communicating with the main cylinder, and an auxiliary passage leading from the main opening of said tube and adapted to communicate with the cylinder-opening momentarily prior to the communication of the main opening therewith, substantially as specified.

4. The combination, with a main cylinder having an exploding passage or port communicating therewith, of a movable exploding-valve supported in proximity to said cylinder, said valve consisting of an exploding-tube normally closed at one end and communicating at the other with the valve-face, an auxiliary opening leading from said valve-face to said tube, means for moving said valve to cause the respective openings to come successively into communication with the cylinder-port, and an exhaust-passage with which the exploding-tube communicates as the valve is moved to disconnect the exploding-tube from the cylinder-port, substantially as specified.

5. The combination, with a main cylinder, of a movable exploding-valve having an exploding-tube normally closed at one end and provided at the other end with an opening adapted to be brought into communication with said cylinder, an auxiliary passage leading into said main tube and so arranged that as the valve moves said auxiliary passage communicates with the main cylinder momentarily prior to the communication of the main passage with said cylinder, and an exhaust-port with which said tube is adapted to communicate when moved away from said cylinder-opening, substantially as specified.

6. The combination, with a main cylinder, of a movable exploding-valve consisting of an outer casing having an inner chamber and an exploding-tube within said chamber, said exploding-tube being normally closed at one end and provided with an opening which extends to the face of said outer casing and adapted as said casing is moved to communicate with an opening in the main cylinder, and a heat-producing burner adapted to heat said exploding-tube within said chamber, and means for reciprocating said valve to and from the opening in the main cylinder, substantially as specified.

7. The combination, with a main cylinder and its piston, of a movable exploding-valve which consists of an outer casing, an inner yielding valve-piece carrying an exploding-tube closed at one end and communicating at the other with a passage in said valve-piece, means for heating said tube, and means for reciprocating said outer casing, so as to bring the passage in said valve-piece opposite to an opening communicating with said main cylinder, and an auxiliary passage in said valve-piece adapted to communicate with said cylinder in advance of the main passage, substantially as specified.

8. The combination, with a main cylinder and its piston, an exploding-port having an outer opening surrounded by a surface adapted to form a valve-seat, and a movable exploding-valve supported in proximity to said main cylinder and provided with a yielding valve-piece seated against the surface of said cylinder-port, of an exhaust-passage in said valve-seat in proximity to said exploding-port, a normally-heated exploding-tube supported on said valve-piece and communicating with a passage therein adapted to be moved opposite said cylinder-port, an auxiliary passage leading to said exploding-tube, and means for reciprocating said exploding-valve on said valve-seat, so as to bring the exploding-tube alternately in communication with the cylinder-port and the exhaust-passage, substantially as specified.

9. The combination, with a main-cylinder and its piston, of an exploding-valve consisting of a pivoted outer casing or frame having an inner passage or chamber, a movable valve-piece supported in said casing or frame and held yieldingly against a valve-seat formed about an opening or port communicating with said main cylinder, a normally-heated exploding-tube supported by said valve-piece, said exploding-tube being closed at one end and communicating at the other end with a passage in said valve-piece which extends outwardly to said valve seat, a normally-active flame or burner for heating said exploding-tube, and means for reciprocating said outer casing from the movement of said piston, so as to bring the exploding-tube into communication with said cylinder through said valve-piece, substantially as specified.

10. In a gas-engine, a moving exploding-valve consisting, essentially, of an outer chamber and an inner exploding-tube, said tube being provided with an auxiliary and a main opening, means for heating said tube in said chamber, and means, substantially as described, for bringing said auxiliary opening into communication with said cylinder to receive a portion of the charge momentarily before the main opening is brought into communication with said cylinder to ignite the charge, substantially as specified.

11. In a gas-engine, an exploding-valve consisting, essentially, of a pivoted outer casing and a movable valve-piece arranged in said casing and held firmly against a valve-seat, an

exploding-tube within said casing communicating through said valve-piece to said valve-seat, an auxiliary passage leading from said valve-seat to said exploding-tube in close proximity to the opening of the main passage, and means for heating said tube, substantially as specified.

12. The combination, in a gas-engine, of an exploding-valve consisting of the outer casing E′, the inner chamber E^2, movable valve-piece E^5, exploding-tube E^7, passage e^7, and auxiliary passage e^{11}, and burner F, substantially as specified.

13. The combination, with a main cylinder and a movable exploding-valve, of an outer pivoted frame supporting said valve, a spring for holding said frame in its normal position, a cam and cam-arm for operating said frame against said spring, and a connecting-rod between said cam-arm and frame, said connecting-rod being located at each end in sockets in the cam-arm and frame, respectively, and held in position by the action of said spring, substantially as specified.

14. In a gas-engine, the combination, with a main cylinder, of independent supply and exhaust valves arranged on opposite sides of said cylinder and communicating therewith through suitable ports, an exploding-port or passage independent of said supply and exhaust ports, and a movable exploding-valve having a normally closed and heated tube adapted to be brought opposite said exploding-port to ignite the charge in said cylinder, substantially as specified.

15. In a gas-engine, the combination, with a supply-valve, of a valve rod or stem connected to said valve, a sliding bar on said rod or stem, a reciprocating arm located adjacent to said sliding bar, said bar being provided with a notch or shoulder adapted to be engaged by said arm and thus move said valve when in one position and to permit said arm to reciprocate without moving said valve when in another position, and means for changing the position of said bar by the speed of the piston, substantially as specified.

16. In a gas-engine adapted to be operated by hydrocarbon fluid, as described, a carburetor consisting of an outer casing having suitable outlet and inlet ports or openings, the outlet port or opening being in direct communication with the valve-chamber which supplies the engine-cylinder, and a measuring-valve, substantially as described, for admitting a definite quantity of hydrocarbon fluid at each opening of said supply-valve, substantially as specified.

17. The combination, in a gas-engine, with a main cylinder and piston and a suitable supply-valve operated intermittently to supply said main cylinder, of a carburetor communicating with the chamber of said supply-valve, said carburetor consisting of an outer casing having an interior space containing suitable absorbent or vaporizing materials, air-supply passages leading into said space, an independent passage leading into said casing to supply hydrocarbon liquid thereto, a measuring-valve in said passage, and means for operating said valve, so as to admit a definite quantity of hydrocarbon liquid to said carburetor each time the engine-supply valve is opened, substantially as specified.

18. The combination, with a carburetor of a gas-engine, of a measuring-valve located in the passage which supplies the liquid hydrocarbon to said carburetor, said valve being provided with a chamber adapted to hold a definite quantity of said liquid hydrocarbon, said chamber being provided with independent supply and exhaust passages, and means for closing the supply-passage of said chamber at the same time the discharge-passage is opened, substantially as and for the purpose specified.

19. The combination, with a carburetor, of a measuring-valve having a chamber l^7, and means for alternately opening and closing the opposite ends of said chamber to fill and discharge the same, substantially as specified.

20. The combination, with a carburetor, of a measuring-valve having a chamber l^7, normally closed at the bottom and open at the top, means for supplying hydrocarbon vapor to said passage, and an air-vent leading therefrom, said chamber being provided with a valve at each end adapted to open alternately to fill and discharge said chamber, substantially as specified.

21. The combination, with a main cylinder and an annular space surrounding the same, of a hollow base upon which said cylinder is supported containing the exhaust and supply ports and their controlling-valves, a reservoir connected by two or more pipes to said annular space surrounding said cylinder and by a separate connection to said hollow base, a passage between said annular space and said hollow base, and means for opening and closing said passage, substantially as specified.

In testimony whereof we have hereunto set our hands this 13th day of December, A. D. 1890.

PETER T. COFFIELD.
CHAS. H. PAXSON.

Witnesses:
JOHN C. BASSETT, Jr.,
CHAS. I. WELCH.