AU9219938

(12) PATENT ABRIDGMENT (11) Document No. AU-B-19938/92
(19) AUSTRALIAN PATENT OFFICE (10) Acceptance No. 640317

(54) Title
POWER AMPLIFIER SATURATION DETECTION AND CORRECTION METHOD AND APPARATUS

International Patent Classification(s)
(51)[5] **H03G 003/20** **H03G 003/30** **H04B 001/04**

(21) Application No. : **19938/92** (22) Application Date : **08.05.92**

(87) PCT Publication Number : **WO92/22133**

(30) Prior Data

(31) Number	(32) Date	(33) Country
709737	**03.06.91**	**US UNITED STATES OF AMERICA**

(43) Publication Date : **08.01.93**

(44) Publication Date of Accepted Application : **19.08.93**

(71) Applicant(s)
MOTOROLA, INC.

(72) Inventor(s)
GREGORY R BLACK; ALEXANDER W. HIETALA

(74) Attorney or Agent
PHILLIPS ORMONDE & FITZPATRICK , 367 Collins Street, MELBOURNE VIC 3000

(56) Prior Art Documents
US 4114108
US 4602218

(57) Methods are also claimed.

CLAIMS

1. A transmitter containing inter alia means for amplifying a first signal and means for controlling the means for amplifying, the means for amplifying having a first and a second input, a first output and having a saturation point, the first signal having a power level, a first frequency and coupled to the first input of the means for amplifying, the magnitude of the means for amplifying responsive to a voltage of a second signal coupled to the second input of the means for amplifying, the transmitter comprising:

means for detecting saturation of the means for amplifying, said means for detecting coupled to the first output of the means for amplifying; and

means for setting the magnitude of the means for amplifying, said means for setting coupled to an output of said means for detecting and coupled to the second input of the means for amplifying, said means for setting further comprising:

.../2

means for generating, in absence of detecting saturation, the second signal having voltage equal to the current voltage of the second signal, and

means for generating, while detecting saturation, the second signal having voltage equal to the current voltage of the second signal less a predetermined increment.

2. A transmitter containing inter alia means for amplifying a first signal and means for controlling the means for amplifying, the means for amplifying having a first and a second input, and a first output and having a saturation point, the first signal having a power level, a first frequency and coupled to the first input of the means for amplifying, the means for amplifying responsive to a voltage of a second signal coupled to the second input of the means for amplifying, the transmitter comprising:

means for detecting saturation of the means for amplifying, said means for detecting coupled to the first output of the means for amplifying; and

means for generating the second signal responsive to said means for detecting saturation, such that the means for amplifying is no longer saturated, said means for generating the second signal comprises a digital signal processor and a digital to analog converter coupled to an output of said means for detecting and coupled to the second input of the means for amplifying.

4. An improved amplifier and control circuit for controlling amplifier saturation comprising:

means for amplifying a first signal, forming a first amplified signal having a power level, said means for amplifying having a magnitude of amplification;

means for detecting a power level of said first amplified signal and generating a second signal having a voltage indicative of said detected power level;

means for comparing the voltage of the second signal and a voltage of a third signal, generating a saturation detection signal indicating the presence or absence of saturation in the means for amplifying; and

.../3

means, responsive to the saturation detection signal, for setting the magnitude of amplification of the means for amplifying coupled to the means for amplifying, the means for setting comprising:

means, in absence of saturation, for generating the third signal having a voltage equal to the voltage of the second signal, and

means, in presence of saturation, for generating the third signal having a voltage equal to the voltage of the second signal less a predetermined increment.

OPI DATE 08/01/93 APPLN. ID 19938/92
AOJP DATE 25/02/93 PCT NUMBER PCT/US92/03765

AU9219938

CT)

(51) International Patent Classification 5 :
H03G 3/02, H04B 1/04

A1

(11) International Publication Number: WO 92/22133

(43) International Publication Date: 10 December 1992 (10.12.92)

(21) International Application Number: PCT/US92/03765

(22) International Filing Date: 8 May 1992 (08.05.92)

(30) Priority data:
709,737 3 June 1991 (03.06.91) US

(71) Applicant: MOTOROLA, INC. [US/US]; 1303 East Algonquin Road, Schaumburg, IL 60196 (US).

(72) Inventors: BLACK, Gregory, R. ; 302 Court of Elm, Vernon Hills, IL 60061 (US). HIETALA, Alexander, W. ; 10 Kildare Court, Cary, IL 60013 (US).

(74) Agents: PARMELEE, Steven, G.et al.; Motorola, Inc., Intellectual Property Dept., 1303 East Algonquin Road, Schaumburg, IL 60196 (US).

(81) Designated States: AT, AU, BR, CA, CH, DE, DK, ES, FI, GB, HU, JP, KR, NL, NO, PL, RU, SE.

Published
With international search report.
Before the expiration of the time limit for amending the claims and to be republished in the event of the receipt of amendments.

(54) Title: POWER AMPLIFIER SATURATION DETECTION AND CORRECTION METHOD AND APPARATUS

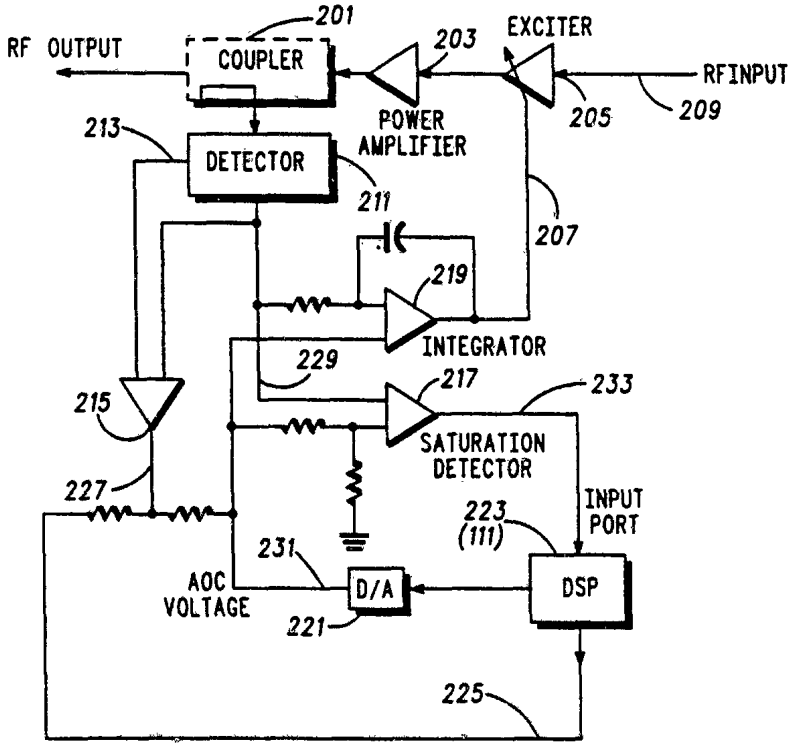

(57) Abstract

A power amplifier controller for detecting saturation of the power amplifier (203) and correcting the automatic output control voltage (231) to avoid any further saturation. The controller detects the power of the RF output signal (211), generates a signal (229) correlated to the detected power, compares changes in that signal (229) to changes in the voltage of the AOC signal (231) in a comparator (217). The comparator (217) generates a signal (233) correlated to saturation of the power amplifier (203) for a DSP (223). The DSP checks the status of this signal (233). Upon detecting saturation, an algorithm contained within the DSP methodically reduces the voltage of the AOC signal (231) until there is a change in the power of the RF output signal (211).

Power Amplifier Saturation Detection and Correction Method and Apparatus

~~Field of the Invention~~

Generally, this invention relates to power amplifier control circuits. More specifically, this invention relates to saturation detection and control for power amplifiers.

~~Background of the Invention~~

The use of power amplifiers in transmitting radio frequencies (RF) signals has many applications, including but not limited to radiotelephone communications systems. In a radiotelephone communications system, there are multiple fixed site transceivers. Each fixed site transceiver is an interface between the line telephone system and multiple, portable, or mobile radiotelephone systems contained within a geographic area served by the fixed site transceiver. The fixed site transceiver and the radiotelephone communicate by sending and receiving FM modulated radio frequency signals to each other.

In an analog radiotelephone system, there is a large available RF spectrum available for radiotelephone communications. The available RF spectrum is channelized into relatively narrow segments of frequency. Upon request, each radiotelephone is

AUSTRALIAN PATENT OFFICE

allocated a frequency channel upon which to broadcast and receive information from the fixed site transceiver. This is known as a Frequency Division Multiple Access (FDMA) system. During a phone call, the radiotelephone transmitter would turn-on and remain on the fixed frequency for the entire time of the phone call. Thus, the transmitter and subsequently the power amplifier (PA) of the radiotelephone only needed to turn-on once and turn-off once for a given phone call which could last several minutes. The fixed site transceiver could also remain on for the duration of a phone call. In an FDMA system, since there are a limited number of turn-ons, the turn-on and turn-off requirements of the power amplifier are not very stringent. If a transmitter is turned on quickly, there is a momentary large burst of noise, however, since this would only occur once during a conversation, it would not substantively affect the communication system. Similarly, if the power amplifier is turned on slowly, there would be an imperceptible gap in the conversation at the beginning of a phone call. These problems are only inconveniences to the user and are not substantive system degrading problems.

In the newly proposed digital cellular radiotelephone systems, the power amplifier turn-on requirements have increased dramatically. The new systems use a time division multiple access (TDMA) communications system. In a TDMA communications system, 8 or 16 radiotelephones share a single 200 kilohertz wide channel on which to broadcast. Each radiotelephone in a channel is allocated one 577 microsecond (uS) time slot on a repetitive basis. During this time slot the radiotelephone ramps up the power amplifier to the

proper frequency and power, sends the desired data, and ramps down the power amplifier so as not to disturb or interfere with the other users sharing the same frequency. Thus, the requirements for controlling the power amplifier are greatly increased.

The Group Special mobile (GSM) recommendations ETSI/PT-12 05.05 (4.2.2 and 4.5.2), March, 1991 were developed to define a digital radiotelephone communications system. These recommendations were aware of the increased power amplifier requirements and have defined a time mask and a spectral frequency mask, as illustrated in FIGS. 7 and 8, which all radiotelephone equipment used in the system must meet. The specifications concerning the time and frequency masks demand the development of a very smooth ramp up of the PA under stringent time constraints.

Saturation of a power amplifier occurs when the power amplifier cannot produce as much power as the control circuitry demands. Saturation may be caused by decreased availability of battery voltage in a portable radiotelephone or environmental temperature extremes. Saturation of the power amplifier can cause two problems. Namely, the saturated power amplifier may damage some properties of the power amplifier (PA), subsequently reducing the efficiency of the PA's operation. Second, excessive power amplifier control voltage will require an excessive amount of time to shut down the PA.

If the time required to ramp down the PA is excessive, even a few microseconds, then the PA will interfere with other PAs which are utilizing the same frequency. This interference will cause data being transmitted between the fixed site transceivers and the

radiotelephones to be lost. This loss will degrade the entire radiotelephone communications system. Therefore, a power amplifier controller is needed which limits the saturation time of the PA especially at the end of the PA's transmitting time.

According to one aspect of the present invention there is provided a transmitter containing inter alia means for amplifying a first signal and means for controlling the means for amplifying, the means for amplifying having a first and a second input, a first output and having a saturation point, the first signal having a power level, a first frequency and coupled to the first input of the means for amplifying, the magnitude of the means for amplifying responsive to a voltage of a second signal coupled to the second input of the means for amplifying, the transmitter comprising:

means for detecting saturation of the means for amplifying, said means for detecting coupled to the first output of the means for amplifying; and

means for setting the magnitude of the means for amplifying, said means for setting coupled to an output of said means for detecting and coupled to the second input of the means for amplifying, said means for setting further comprising:

means for generating, in absence of detecting saturation, the second signal having voltage equal to the current voltage of the second signal, and

means for generating, while detecting saturation, the second signal having voltage equal to the current voltage of the second signal less a predetermined increment.

According to a further aspect of the present invention there is provided a transmitter containing inter alia means for amplifying a first signal and means for controlling the means for amplifying, the means for amplifying having a first and a second input, and a first output and having a saturation point, the first signal

AUSTRALIAN PATENT OFFICE MJP

having a power level, a first frequency and coupled to the first input of the means for amplifying, the means for amplifying responsive to a voltage of a second signal coupled to the second input of the means for amplifying, the transmitter comprising:

means for detecting saturation of the means for amplifying, said means for detecting coupled to the first output of the means for amplifying; and

means for generating the second signal responsive to said means for detecting saturation, such that the means for amplifying is no longer saturated, said means for generating the second signal comprises a digital signal processor and a digital to analog converter coupled to an output of said means for detecting and coupled to the second input of the means for amplifying.

According to a still further aspect of the present invention there is provided a method of controlling an amplifier, the amplifier having at least a first and a second input, an output, a saturation point and amplifying a first signal responsive to the voltage of a second signal, the first signal having a power level, a first frequency and coupled to the first input of the amplifier, the second signal coupled to a second input of the amplifier the method of controlling the amplifier comprising the steps of:

a) detecting the power level of the first amplified signal at the output of the amplifier and generating a fifth signal indicating the detected power level;

b) determining a difference between the fifth signal and a third signal, the third signal generated to control the power level of the amplifier;

c) generating a fourth signal corresponding to said difference and indicating saturation of the amplifier or absence thereof;

d) generating, in absence of saturation, the second signal in accordance with the third signal;

e) generating, while indicating saturation, the

AUSTRALIAN PATENT OFFICE MJP

second signal having a voltage equal to said third signal less a predetermined increment; and

f) repeating steps a through e until the fourth signal indicates an absence of saturation.

According to a still further aspect of the present invention there is provided an improved amplifier and control circuit for controlling amplifier saturation comprising:

means for amplifying a first signal, forming a first amplified signal having a power level, said means for amplifying having a magnitude of amplification;

means for detecting a power level of said first amplified signal and generating a second signal having a voltage indicative of said detected power level;

means for comparing the voltage of the second signal and a voltage of a third signal, generating a saturation detection signal indicating the presence or absence of saturation in the means for amplifying; and

means, responsive to the saturation detection signal, for setting the magnitude of amplification of the means for amplifying coupled to the means for amplifying, the means for setting comprising:

means, in absence of saturation, for generating the third signal having a voltage equal to the voltage of the second signal, and

means, in presence of saturation, for generating the third signal having a voltage equal to the voltage of the second signal less a predetermined increment.

The present invention may encompass a transmitter having an amplifier, an amplifier controller and a first signal. The amplifier may have at least two inputs and at least one output, and a saturation point. The first signal may have a power level, a first frequency and coupled to an input of the amplifier. The amplifier may respond to the voltage of a second signal which is coupled to the second input of the amplifier. The amplifier controller may detect saturation of the amplifier at the

AUSTRALIAN PATENT OFFICE 39 MJP

output of the amplifier and may generate the second signal, whereby the amplifier may no longer be saturated.

A preferred embodiment of the present invention will now be described with reference to the accompanying drawings wherein:-

FIG. 1 is a block diagram of a radiotelephone communications system which may employ the present invention.

FIG. 2 is a block diagram of a power amplifier and corresponding power amplifier control circuit which may employ the present invention.

FIG. 3 is a voltage versus time graph which shows the voltage of the AOC control signal and the corresponding saturation detection signal, which may exist in the present invention.

AUSTRALIAN PATENT OFFICE
MJP

FIG. 4 is a power versus time graph which shows the desired output of a power amplifier which may employ the present invention.

FIG. 5 is a method flow chart DSP algorithm which may employ the present invention.

FIG. 6 is a schematic diagram of a power amplifier control circuit which may employ the present invention.

FIG. 7 is the GSM time mask as defined by GSM recommendation 05.05 (4.2.2).

FIG. 8 is the GSM spectral frequency mask as defined by GSM recommendation 05.05 (4.5.2).

~~Description of a Preferred Embodiment~~

The invention disclosed herein, may be employed in a TDMA radiotelephone system which is illustrated in FIG. 1. In a radiotelephone system there is a fixed site transceiver 101, which sends out RF signals to portable and mobile radiotelephones contained within a geographic coverage area. One such phone is the portable radiotelephone 103. A radiotelephone system is assigned a frequency band which it is allowed to broadcast within. The frequency band is broken up into several channels 200 Kilohertz wide. Each channel is capable of handling communications between the transceiver 101 and up to 8 radiotelephones within its coverage area. Each radiotelephone is assigned time slots in which to broadcast and receive information from the transceiver 101. Each time slot is approximately 577 microseconds in duration. Portable radiotelephone 103, model number F19UVD0960AA available from Motorola, Inc., includes a transmitter 107, a receiver 109, and a digital signal processor (DSP) 111, such as the DSP 56000 available from Motorola, Inc. Several signals are transmitted between the DSP 111 and the transmitter 107 on multiple signal lines 113.

The transmitter 107 and the transceiver 101 both contain power amplifiers with stringent requirements as defined by the Group Special Mobile (GSM) recommendations ETSI/PT-12 05.05 (4.2.2 and 4.5.2), March, 1991. The specifications require any transmitter to meet a time mask as shown in FIG.7 and a spectral frequency mask as shown in FIG.8. The antenna 105 is

AUSTRALIAN PATENT OFFICE

used to transmit and receive radio frequency signals to and from transceiver 101.

Upon receiving signals, an antenna 105 converts the signals into electrical radio frequency signals and transfers the signals to the receiver 109. The receiver 109 demodulates and converts electrical radio frequency signals into data signals usable by the rest of the portable radiotelephone 103.

Upon transmission of the radio frequency signals, the DSP 111 feeds the transmitter 107 information which is desired to be transmitted and also controlling information for the transmitter 107 via signal lines 113. The transmitter 107 takes the data and converts it into electrical radio frequency signals and gives the electrical radio frequency signals the appropriate amount of power necessary with use of the power amplifier. The antenna 105 then takes the electrical radio frequency signals and converts them into radio frequency signals and transmits them into the air for use by the transceiver 101.

The power amplifier 203 and its associated controllers are located in the transmitter 107, and illustrated in the block diagram of FIG. 2. The function of the power amplifier 203 is to take in the radio frequency input which contains voice and data which is to be transmitted back to the fixed site transceiver 101 and amplify the RF input signals to the appropriate power level for transmission. The exciter 205 is an adjustable power amplifier which adjusts the RF input signals 209 to their proper input level for the power amplifier 203.

The block diagram of FIG.2 contains several control loops, including the standard control loop, the ramp up loop, and the saturation detector loop of the power

amplifiers. The details concerning the standard control loop and the ramp up loop can be found in U.S. Patent 5,150,075 assigned to the assignee of the present invention. All of the control loops utilize the coupler 201. The coupler 201 is an electromagnetic coupler which couples the RF output signals into the control loops without causing excessive loss to the RF output signals.

The detector 211 detects the power level of the RF output signals and creates a power level signal 229 the voltage of which is responsive to the amount of power in the RF output signals. The detector 211 also outputs a reference signal 213. The voltage of the reference signal 213 is responsive to the DC offset output by the detector in absence of activity of the power amplifier 203.

The saturation control loop prevents the exciter 205 and power amplifier 203 from exceeding its amplification limit using the control signal input 207. The saturation loop consists of the coupler 201, the detector 211, the comparator 217, the digital signal processor 223 and the digital-to-analog converter 221 (D/A). The saturation detection comparator 217 compares the detector output signal 229 to the AOC voltage signal 231 to determine if the detector output signal 229 is responsive to changes in the AOC voltage signal 231. This comparison will indicate saturation from the control voltage when the voltage of the detector output signal 229 drops below the voltage of the AOC signal 231, because the detector voltage will not change with a corresponding change in the AOC voltage during saturation. The output signal 233 is input into the DSP

AUSTRALIAN PATENT OFFICE MJP

223. The DSP 223 contains an algorithm which steps down the voltage of the AOC signal 231 until the voltage of the AOC signal 231 drops below the saturated detector voltage 229. Then, the voltage of the AOC signal 231 can be stepped up or down. In the preferred embodiment, the voltage of the AOC signal is stepped down further to insure that the power amplifier 203 remains unsaturated, however, the voltage of the AOC signal 231 could be stepped up to become closer to the saturation threshold depending on the specific needs of a given implementation.

FIG. 3 is a voltage versus time graph of the AOC control signal 231 and the saturation detection signal 233. Here, the voltage of the AOC control signal 303 is rising steadily. At approximately 22 microseconds (uS) saturation is detected in the PA 203. This saturation is detected by the comparator 217 as noted by the voltage of saturation detection signal 301 rising rapidly. Upon detection of saturation, the DSP 223 incrementally reduces the voltage of AOC control signal 231 until, at approximately 27 uS, the voltage of the AOC control signal 231 is sufficiently low to cause the power amplifier 203 to eventually come out of saturation as shown by the decrease in the voltage of the saturation detection signal 301.

The dotted signal 305 shows the path of the voltage of the AOC control signal without the present invention employed. The voltage of the AOC control signal continues into the saturated power range of the PA 203 which could cause damage and also result in a spectral frequency violation upon power down of the PA 203.

FIG. 4 illustrates the power versus time of a typical power amplifier such as that shown in FIG. 2 at 203. At

401, with the present invention employed, the power rises steadily in the PA 203. At 403, the PA 203 becomes saturated at approximately 22 uS. The saturation detection control loop immediately realizes the PA 203 is saturated and warns the DSP 223. Subsequently, the DSP 223 reduces the voltage of the AOC control signal 231. At 405, the PA 203 comes out of saturation and the power is maintained slightly below the threshold of saturation for the remainder of the time slot where it ramps down smoothly.

FIG. 5 is a method flow chart used by the DSP 223 upon activation of the saturation detection control signal 233. Variables X Y and Z are all variable and can be set to values depending on the needs of the system.

Variable X depends on the accuracy desired of the algorithm in a given application. The smaller the variable X the more accurate the final power level will be, however, the longer it will take for the PA 203 to come out of saturation. In the preferred embodiment, the variable X is set to 2 D/A steps, which is approximately 18 millivolts.

The variable Z is the settling time required for a PA to adjust to a change in the voltage of the AOC signal. In the preferred embodiment the variable Z is set to 500 nS.

The variable Y is part of an optional step required within the algorithm. Y is the additional change in the voltage of the AOC signal after the PA has come out of saturation. The voltage of the AOC signal may be increased or decreased according to the desires of the specific application. In the preferred embodiment, the variable Y is set to 4 D/A steps which is approximately 36 millivolts. The voltage of the AOC control signal is

reduced by this voltage Y to remove the PA farther from the saturation threshold.

In the preferred embodiment, the method starts at 501 when the ramp up of the PA 203 is completed. At 503, the DSP checks the status of the saturation detection signal 233. If the saturation detection signal 233 is high, signifying that the PA 203 is saturated, then the algorithm proceeds to step 505. If the saturation detection signal 233 is low, the algorithm proceeds to step 513. At 505, the voltage of the AOC control signal 231 is reduced by a predetermined increment X. At 507, the algorithm waits a predetermined number of nanoseconds, Z, until the PA 203 adjusts its power to the newly created AOC voltage. At 509, the DSP 223 checks the status of the saturation detection signal 233. If the saturation detection signal 233 is still high, then the algorithm returns to step 505. If the saturation detection signal 233 is low, signifying that the PA 203 is no longer saturated, then the algorithm continues to step 511. At 511, the voltage of the AOC control signal 231 is changed by a predetermined increment Y. The change may be either an increase or a decrease in voltage, depending upon the needs of the system. In the preferred embodiment, the voltage is decreased by the predetermined increment Y. At 513, the method ends.

FIG. 6 is a schematic diagram of the PA 203 control circuit which includes the saturation detection control loop. The circuit contains the coupler 607, the detector 605, the integrator 601, the power range controller 603 and the saturation detection circuit 609. Saturation detection circuit compares the AOC voltage control signal 631 to the detector output voltage signal 629 at

comparator 641. Upon detection that the AOC voltage is greater than the detector voltage the saturation detection signal 233 goes high, this is reported to the DSP 223 so that the saturation detection algorithm illustrated in FIG.5 may be used to reduce the voltage of the AOC control signal.

Saturation detection at the output of the detector 605 is preferred over detection at the output of the integrator 219. If the saturation detection was at the output of the integrator 219, then the delay associated with the integrator 219 would cause the output power to ramp down much farther than desired before the saturation detector indicates that saturation has been corrected. Thus, detection of saturation at the output of the integrator 219 would be inefficient use of the PA 203, and would not meet the GSM time mask illustrated in FIG.7.

Therefore, with the use of the saturation detection comparator 217, comparing the voltage of the AOC control signal 231 and the voltage of the detector output signal 229 one can determine that the PA 203 is saturated. Using the DSP 223 and the algorithm illustrated in FIG.5 within the DSP 223 the PA 203 can be brought to the threshold of saturation to prevent damage to the PA 203 and also to prevent violation of the spectral time and frequency masks illustrated in FIGS.7 and 8.

~~What is claimed is:~~

AUSTRALIAN PATENT OFFICE

THE CLAIMS DEFINING THE INVENTION ARE AS FOLLOWS:

1. A transmitter containing inter alia means for amplifying a first signal and means for controlling the means for amplifying, the means for amplifying having a first and a second input, a first output and having a saturation point, the first signal having a power level, a first frequency and coupled to the first input of the means for amplifying, the magnitude of the means for amplifying responsive to a voltage of a second signal coupled to the second input of the means for amplifying, the transmitter comprising:

means for detecting saturation of the means for amplifying, said means for detecting coupled to the first output of the means for amplifying; and

means for setting the magnitude of the means for amplifying, said means for setting coupled to an output of said means for detecting and coupled to the second input of the means for amplifying, said means for setting further comprising:

means for generating, in absence of detecting saturation, the second signal having voltage equal to the current voltage of the second signal, and

means for generating, while detecting saturation, the second signal having voltage equal to the current voltage of the second signal less a predetermined increment.

2. A transmitter containing inter alia means for amplifying a first signal and means for controlling the means for amplifying, the means for amplifying having a first and a second input, and a first output and having a saturation point, the first signal having a power level, a first frequency and coupled to the first input of the means for amplifying, the means for amplifying responsive to a voltage of a second signal coupled to the second input of the means for amplifying, the transmitter comprising:

means for detecting saturation of the means for

AUSTRALIAN PATENT OFFICE MJP

amplifying, said means for detecting coupled to the first output of the means for amplifying; and

means for generating the second signal responsive to said means for detecting saturation, such that the means for amplifying is no longer saturated, said means for generating the second signal comprises a digital signal processor and a digital to analog converter coupled to an output of said means for detecting and coupled to the second input of the means for amplifying.

3. A method of controlling an amplifier, the amplifier having at least a first and a second input, an output, a saturation point and amplifying a first signal responsive to the voltage of a second signal, the first signal having a power level, a first frequency and coupled to the first input of the amplifier, the second signal coupled to a second input of the amplifier the method of controlling the amplifier comprising the steps of:

a) detecting the power level of the first amplified signal at the output of the amplifier and generating a fifth signal indicating the detected power level;

b) determining a difference between the fifth signal and a third signal, the third signal generated to control the power level of the amplifier;

c) generating a fourth signal corresponding to said difference and indicating saturation of the amplifier or absence thereof;

d) generating, in absence of saturation, the second signal in accordance with the third signal;

e) generating, while indicating saturation, the second signal having a voltage equal to said third signal less a predetermined increment; and

f) repeating steps a through e until the fourth signal indicates an absence of saturation.

4. An improved amplifier and control circuit for controlling amplifier saturation comprising:

means for amplifying a first signal, forming a first amplified signal having a power level, said means for amplifying having a magnitude of amplification;

AUSTRALIAN PATENT OFFICE MJP

means for detecting a power level of said first amplified signal and generating a second signal having a voltage indicative of said detected power level;

means for comparing the voltage of the second signal and a voltage of a third signal, generating a saturation detection signal indicating the presence or absence of saturation in the means for amplifying; and

means, responsive to the saturation detection signal, for setting the magnitude of amplification of the means for amplifying coupled to the means for amplifying, the means for setting comprising:

means, in absence of saturation, for generating the third signal having a voltage equal to the voltage of the second signal, and

means, in presence of saturation, for generating the third signal having a voltage equal to the voltage of the second signal less a predetermined increment.

5. An improved amplifier and control circuit in accordance with claim 4 wherein said means for generating the third signal is a digital signal processor and a digital to analog converter.

6. An improved amplifier and control circuit in accordance with claim 4 wherein said means for detecting saturation is a differential amplifier.

7. A transmitter in accordance with claim 1 or 2 substantially as herein described with reference to the accompanying drawings.

8. A method of controlling an amplifier in accordance with claim 3 substantially as herein described with reference to the accompanying drawings.

9. An improved amplifier and control circuit in accordance with claim 4 substantially as herein described with reference to the accompanying drawings.

DATED: 8 June, 1993.

PHILLIPS ORMONDE & FITZPATRICK

Attorneys for:

MOTOROLA, INC.

David B Fitzpatrick

4798u

AUSTRALIAN PATENT OFFICE MJP

Power Amplifier Saturation Detection and Correction Method and Apparatus

Abstract of the Disclosure

A power amplifier controller for detecting saturation of the power amplifier (203) and correcting the automatic output control voltage (231) to avoid any further saturation. A detector (211) detects the power of the RF output signal and generates a signal (229) correlated to the detected power. Comparator (217) compares changes in that signal (229) to changes in the voltage of the AOC signal (231). The comparator (217) generates a signal (233) correlated to saturation of the power amplifier (203) for a DSP (223). The DSP (223) checks the status of this signal (233). Upon detecting saturation, an algorithm contained within the DSP (223) methodically reduces the voltage of the AOC signal (231) until there is a change in the power of the RF output signal.

AUSTRALIAN PATENT OFFICE

19938/92

1/5

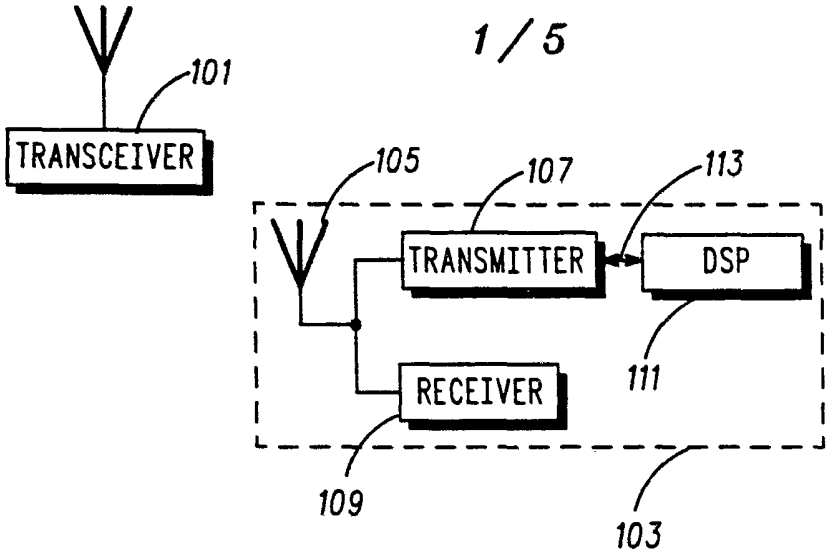

FIG.1

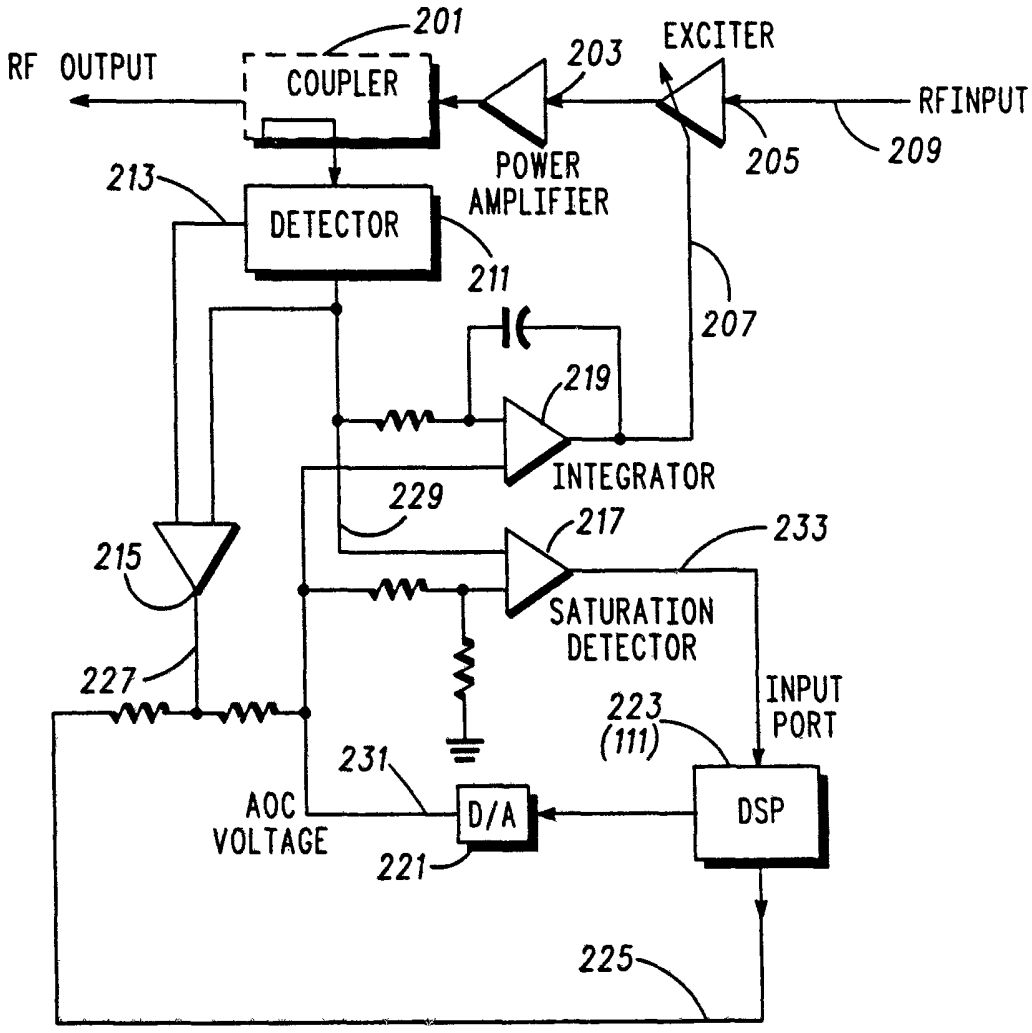

FIG.2

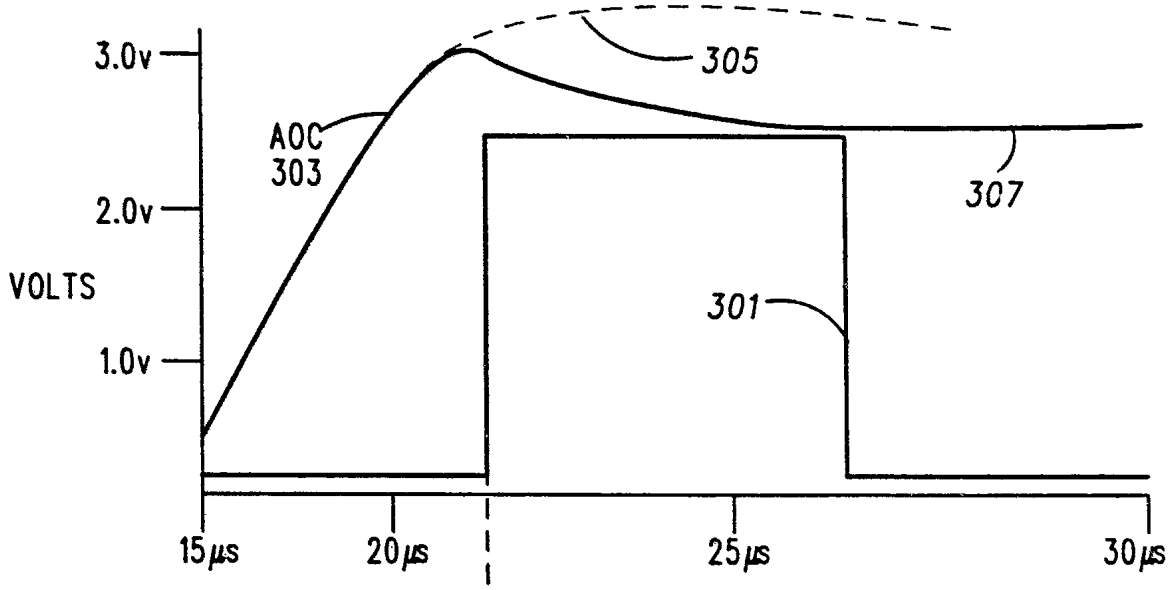
3.0v
2.0v
VOLTS
1.0v
AOC
303
305
307
301
15μs
20μs
25μs
30μs
TIME

FIG. 3

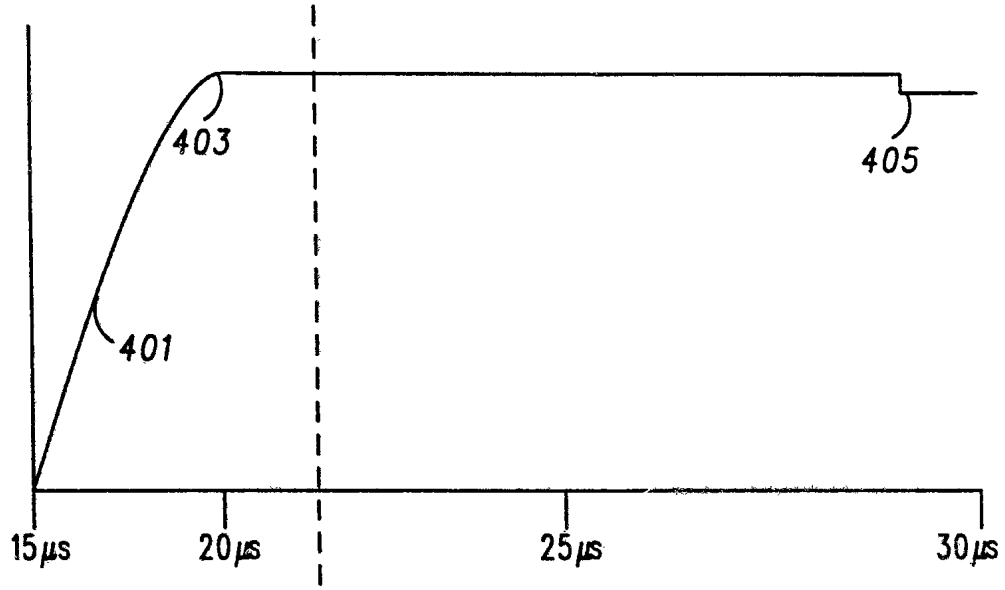
403
405
401
15μs
20μs
25μs
30μs

FIG. 4

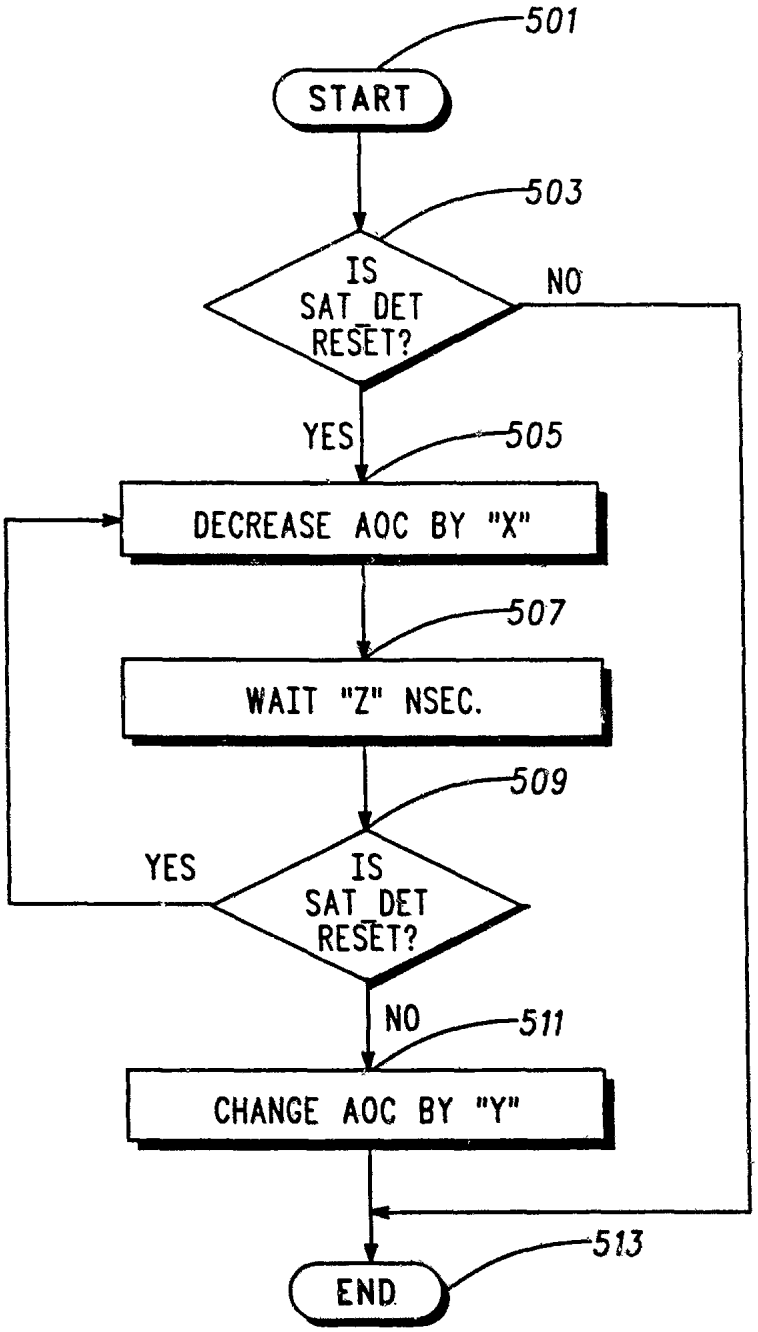
501
START
503
IS SAT_DET RESET?
NO
YES
505
DECREASE AOC BY "X"
507
WAIT "Z" NSEC.
509
YES
IS SAT_DET RESET?
NO
511
CHANGE AOC BY "Y"
513
END

FIG. 5

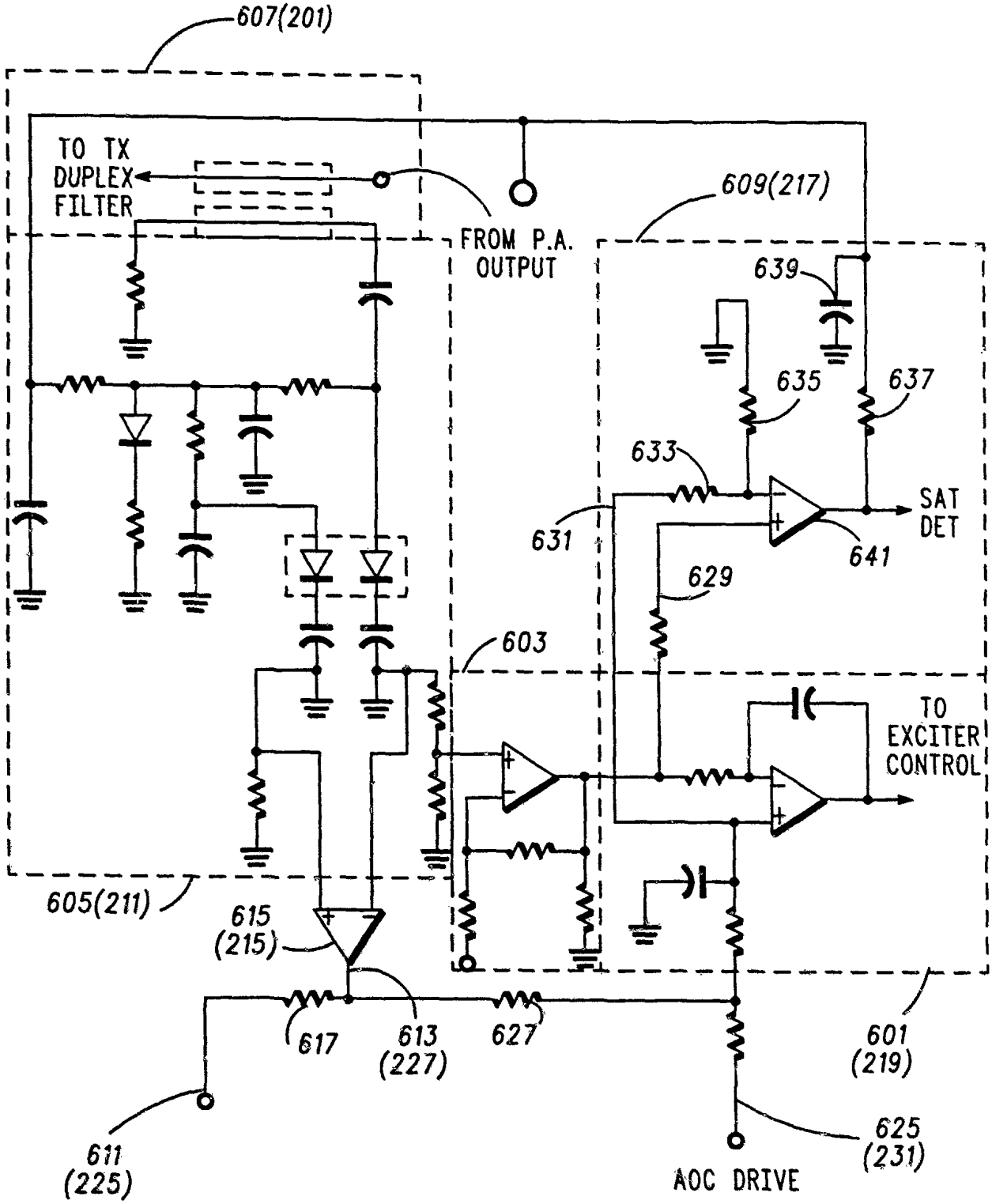
607(201)
TO TX
DUPLEX
FILTER
FROM P.A.
OUTPUT
609(217)
639
635
637
633
631
SAT
DET
641
629
603
TO
EXCITER
CONTROL
605(211)
615
(215)
617
613
(227)
627
601
(219)
611
(225)
625
(231)
AOC DRIVE

FIG. 6

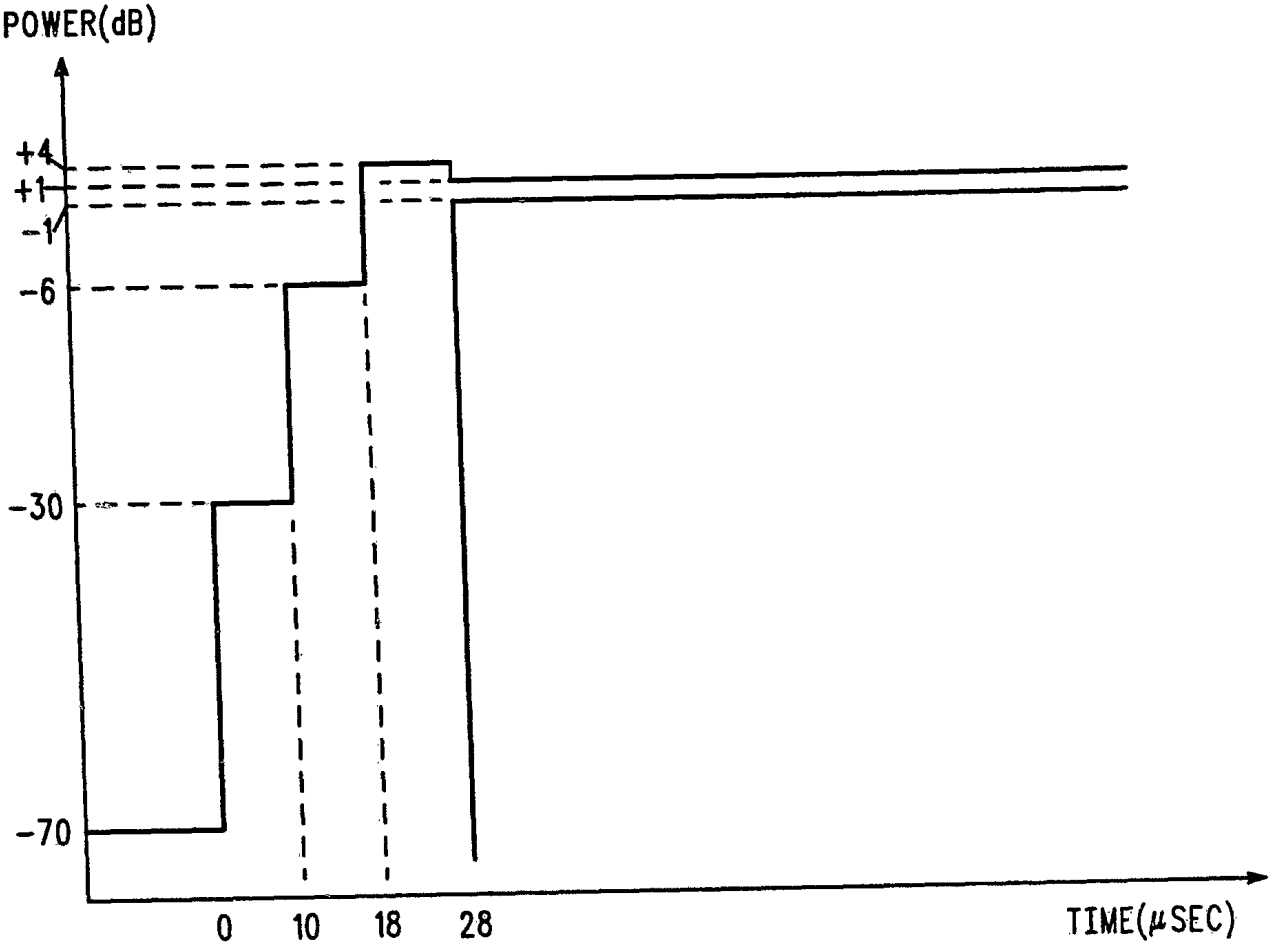

FIG.7

POWER LEVEL	MAXIMUM LEVEL MEASURED			
	400kHz	600kHz	1200kHz	1800kHz
43 dbm	-17 dbm	-26 dbm	-32 dbm	-36 dbm
41 dbm	-19 dbm	-26 dbm	-32 dbm	-36 dbm
39 dbm	-21 dbm	-26 dbm	-32 dbm	-36 dbm
<37 dbm	-23 dbm	-26 dbm	-32 dbm	-36 dbm

FIG.8

INTERNATIONAL SEARCH REPORT

International application No.
PCT/US92/03765

A. CLASSIFICATION OF SUBJECT MATTER

IPC(5) :HO3G 3/02; HO4B 1/04
US CL :455/117,126,127; 330/279
According to International Patent Classification (IPC) or to both national classification and IPC

B. FIELDS SEARCHED

Minimum documentation searched (classification system followed by classification symbols)

U.S. : 455/115,116; 330/207P, 298

Documentation searched other than minimum documentation to the extent that such documents are included in the fields searched

Electronic data base consulted during the international search (name of data base and, where practicable, search terms used)

NONE

C. DOCUMENTS CONSIDERED TO BE RELEVANT

Category*	Citation of document, with indication, where appropriate, of the relevant passages	Relevant to claim No.
Y	US, A, 4,114,108 (FAULKENBERRY ET AL) 12 SEPTEMBER 1978; See figure 1.	1-10
Y	JP,A, 62-139425 (KANAI) 23 JUNE 1987 See figure 1 & 4.	1-10
Y	EP,A, 0,415,503 (PHILIPSCOMPOSANTS) 06 MARCH 1991 See entire document.	1-10
A	US,A, 4,602,218 (VILMUR ET AL.) 22 JULY 1986 See figures 1,2 and 5.	1-10
A	US,A, (VAN DEN BUNGELAAR) 31 JULY 1990 See figure 3,8.	1-10

☐ Further documents are listed in the continuation of Box C. ☐ See patent family annex.

*	Special categories of cited documents:	"T"	later document published after the international filing date or priority date and not in conflict with the application but cited to understand the principle or theory underlying the invention
"A"	document defining the general state of the art which is not considered to be part of particular relevance	"X"	document of particular relevance; the claimed invention cannot be considered novel or cannot be considered to involve an inventive step when the document is taken alone
"E"	earlier document published on or after the international filing date	"Y"	document of particular relevance the claimed invention cannot be considered to involve an inventive step when the document is combined with one or more other such documents, such combination being obvious to a person skilled in the art
"L"	document which may throw doubts on priority claim(s) or which is cited to establish the publication date of another citation or other special reason (as specified)	"&"	document member of the same patent family
"O"	document referring to an oral disclosure, use, exhibition or other means		
"P"	document published prior to the international filing date but later than the priority date claimed		

Date of the actual completion of the international search	Date of mailing of the international search report
07 AUGUST 1992	29 OCT 1992
Name and mailing address of the ISA/ US Commissioner of Patents and Trademarks Box PCT Washington, D.C. 20231 Facsimile No. NOT APPLICABLE	Authorized officer For CHI PHAM NGUYEN NGOC-HO INTERNATIONAL DIVISION Telephone No. (703) 305-4378

Form PCT/ISA/210 (second sheet)(July 1992)*