Jan. 31, 1967 G. E. LYVERS 3,301,243

ENGINE STARTING DEVICES

Filed Sept. 9, 1963 4 Sheets-Sheet 1

Fig. 1.

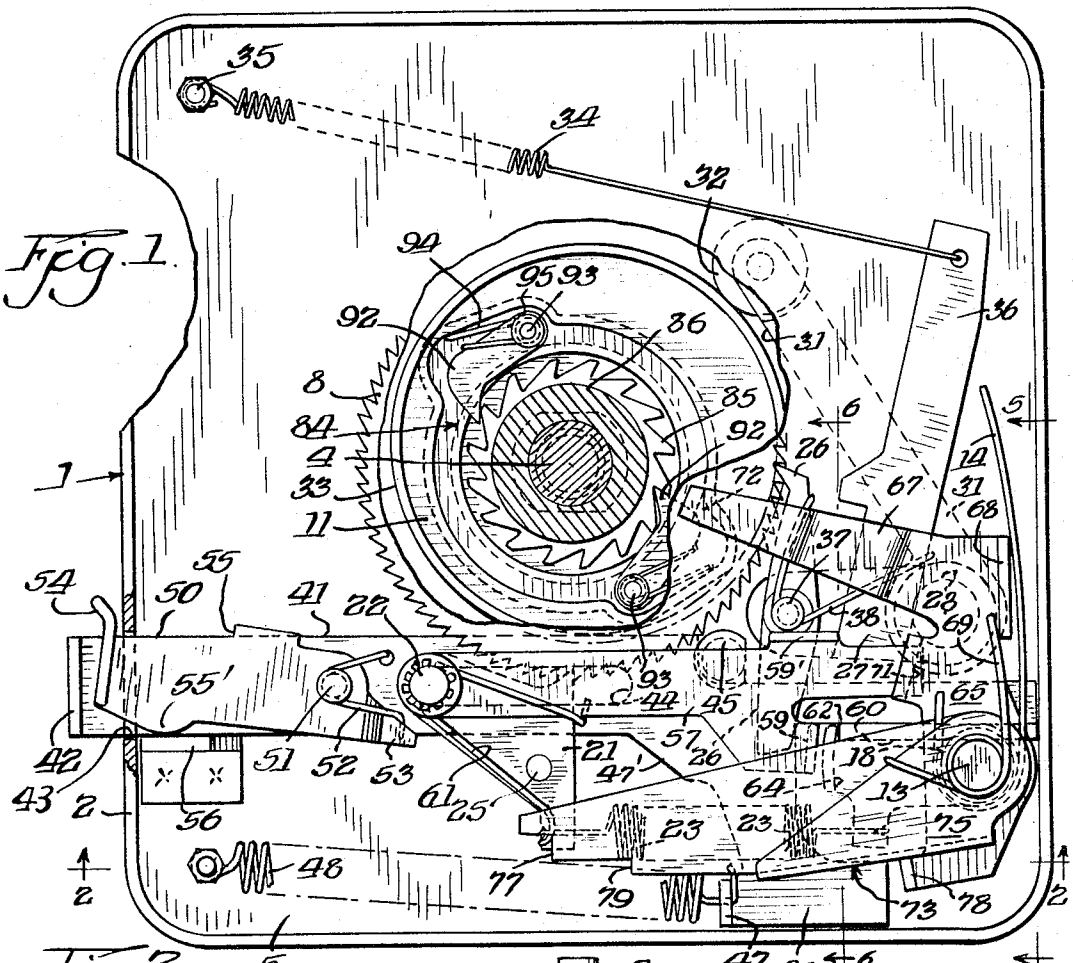

Fig 2.

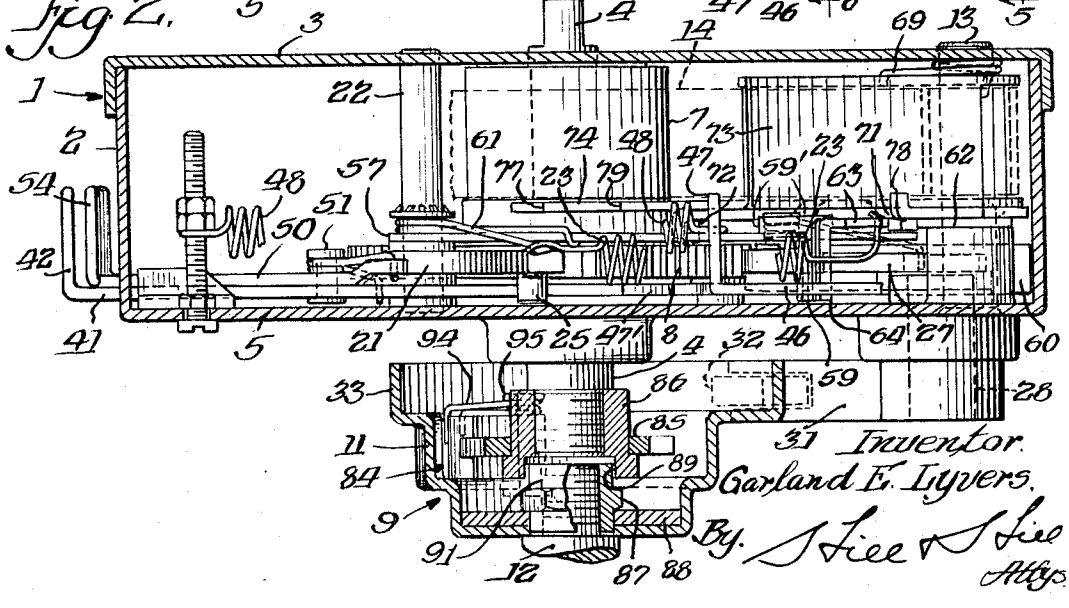

Inventor.
Garland E. Lyvers.
By. Lee & Lee
Attys.

Jan. 31, 1967 G. E. LYVERS 3,301,243

ENGINE STARTING DEVICES

Filed Sept. 9, 1963 4 Sheets-Sheet 2

Fig. 3.

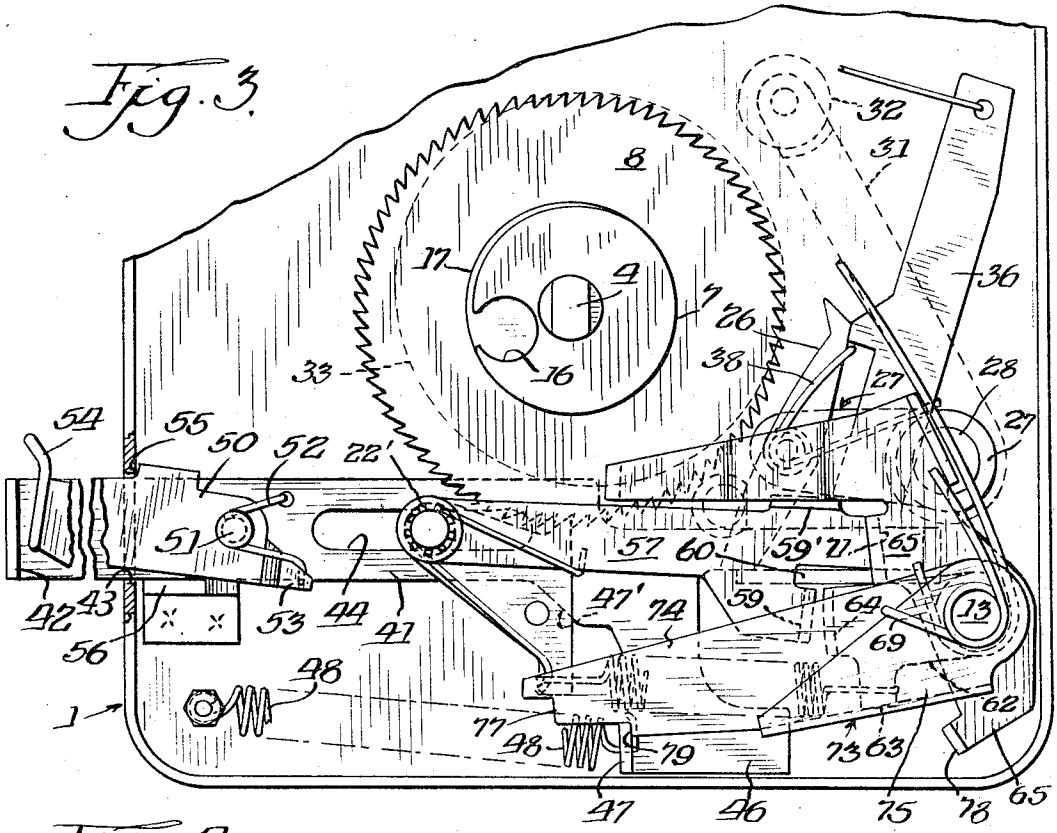

Fig. 4

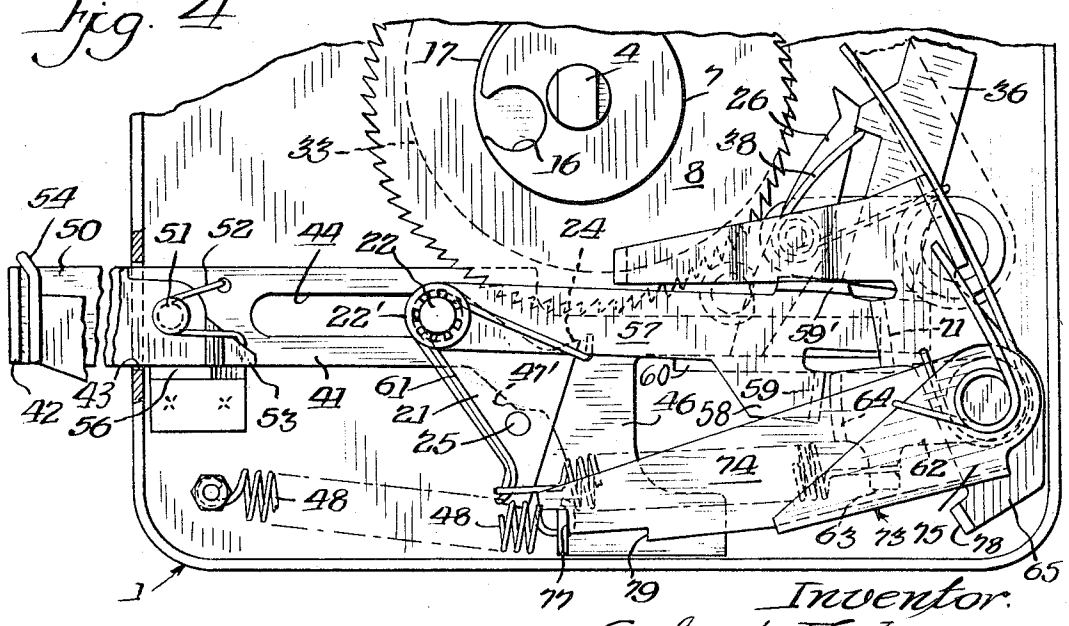

Inventor.
Garland E. Lyvers.
By Hice & Hice Attys.

Jan. 31, 1967 G. E. LYVERS 3,301,243

ENGINE STARTING DEVICES

Filed Sept. 9, 1963 4 Sheets-Sheet 3

Fig. 5.

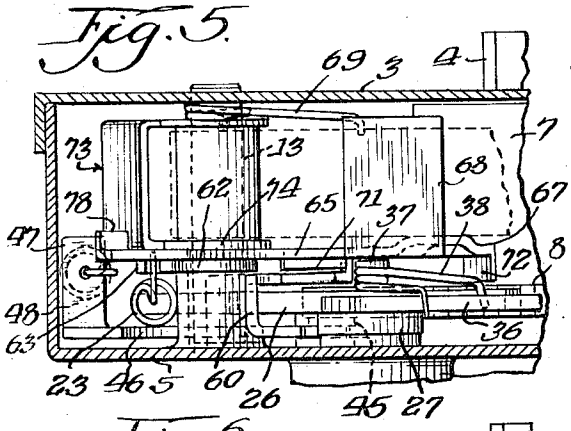

Fig. 7

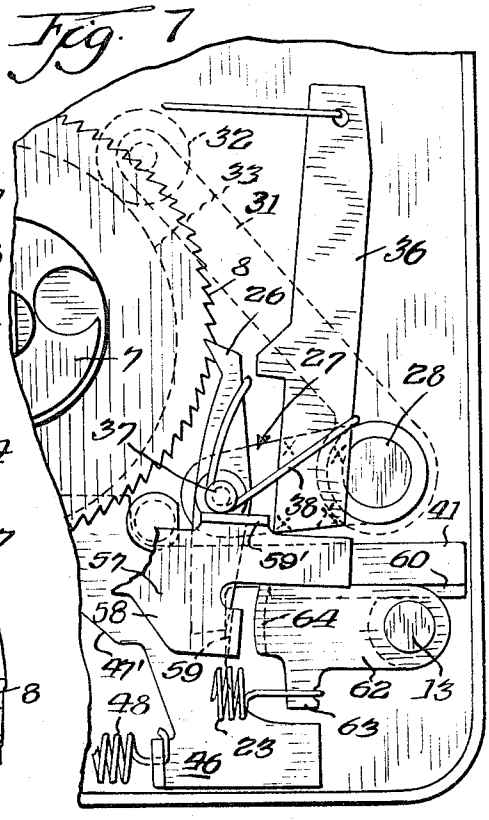

Fig. 6.

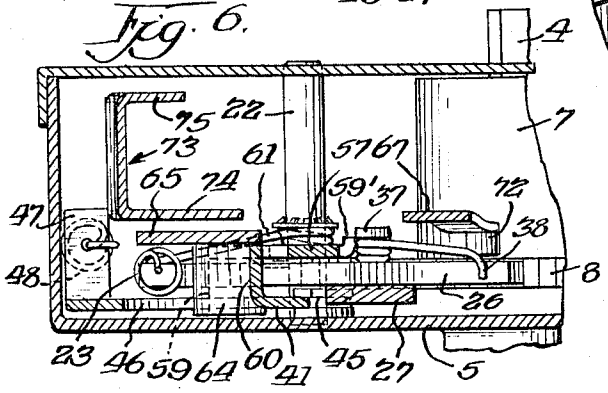

Fig. 8

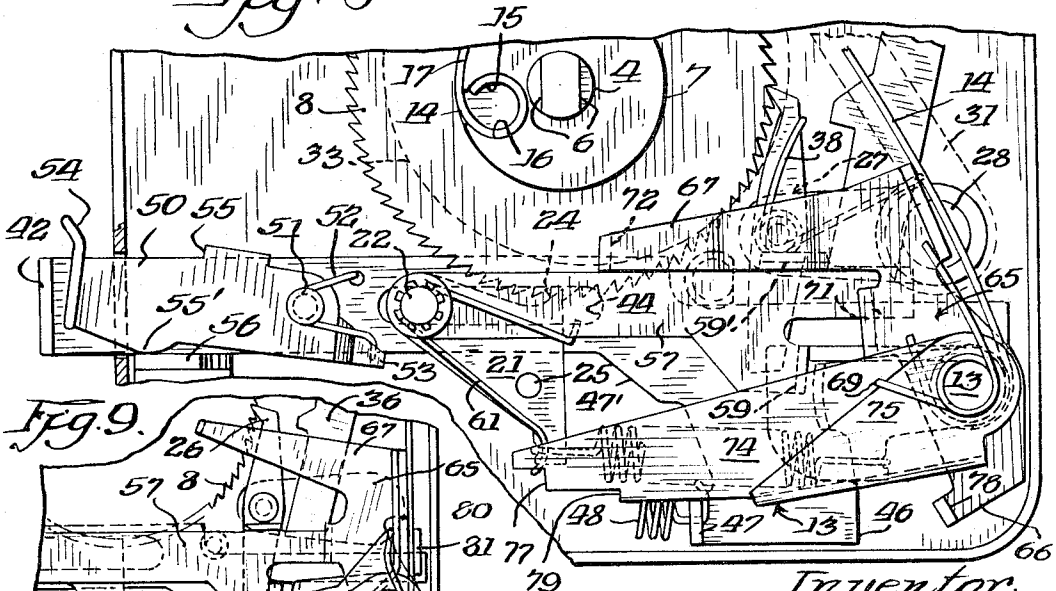

Fig. 9.

Inventor.
Garland E. Lyvers.
By. Slee & Slee Attys

Jan. 31, 1967 G. E. LYVERS 3,301,243

ENGINE STARTING DEVICES

Filed Sept. 9, 1963 4 Sheets-Sheet 4

FIG. 10

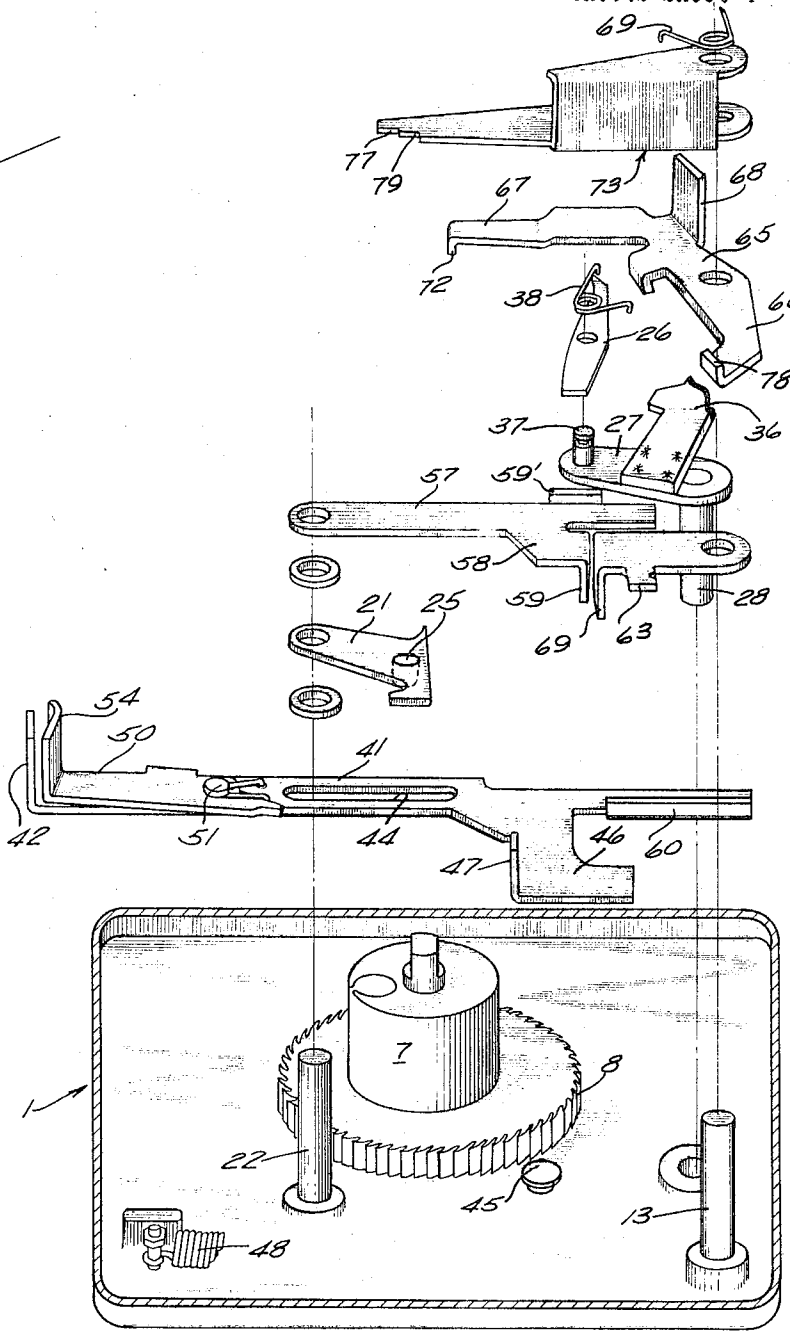

INVENTOR
Garland E. Lyvers
Lee & Lee
ATTORNEYS

BY

United States Patent Office 3,301,243 Patented Jan. 31, 1967

3,301,243

ENGINE STARTING DEVICES

Garland E. Lyvers, 2612 W. Crescent, Racine, Wis. 53400

Filed Sept. 9, 1963, Ser. No. 307,491
24 Claims. (Cl. 123—179)

The invention relates generally to engine starting devices and more particularly to a spring actuated starting mechanism for combustion engines.

The present invention has among its objects the production of the starting mechanism which is exceedingly simple in construction and inexpensive to manufacture, having a minimum of parts and employing only a single control member by suitable manual positioning of which both the engine starting operation and spring rewinding operations may be manually controlled, the control member preferably being so arranged that it may be moved in one direction to effect the starting operation, moved in the opposite direction to effect the winding operation and disposed in an intermediate portion when the spring is fully wound, the winding operation being automatically discontinued when the spring has been wound by the engine to its fully wound position.

Another object of the invention is the production of a starting mechanism having the above features, and which is so designed that improper operation of the control member is prevented, so that following actuation to starting position, it cannot be moved to a rewind position until the spring has become fully unwound, and likewise, following actuation of the control member to spring rewinding position, it cannot be withdrawn therefrom until the spring has become fully wound, and upon such occurrence, means is provided for insuring the movement of the control member only to the intermediate position and not to the starting position.

A further object of the invention is the production of such a starting mechanism which also provides means for insuring disengagement of the mechanism from the engine after the spring is fully wound and the necessary actuation of the mechanism in the event the engine stalled during rewinding operation which would require a manual completion of the rewinding operation.

A further object of the invention is the production of a starting mechanism having all of the above advantages in which the safety functions are achieved with substantially no addition to the number of components required to achieve the basic spring rewinding and engine starting functions.

A further object of the invention is the production of a novel clutch mechanism operatively connecting the starter with a combustion engine, whereby proper alignment between the starter and engine shafts is achieved.

Many other objects and advantages of the construction herein shown and described will be obvious to those skilled in the art from the disclosure herein given.

In the drawings, where like reference characters indicates like or corresponding parts:

FIG. 1 is a top plan view of a starting mechanism embodying the invention, with the housing cover removed and illustrating the mechanism in spring winding position;

FIG. 2 is a transverse sectional view taken approximately on the line 2—2 of FIG. 1;

FIG. 3 is a figure similar to FIG. 1 illustrating the parts in changed position following the completion of the spring winding operation;

FIG. 4 is a plan view of the actuating mechanism similar to FIGS. 1 and 3, with the mechanism disposed for effecting the starting operation;

FIG. 5 is a transverse sectional view taken approximately on the line 5—5 of FIG. 1;

FIG. 6 is a similar sectional view taken approximately on the line 6—6 of FIG. 1;

FIG. 7 is a fragmentary plan view illustrating positions of certain operating elements during the winding operation;

FIG. 8 illustrates the operation of the mechanism during manual rewinding;

FIG. 9 is a figure similar to FIG. 1, illustrating a modification; and

FIG. 10 is an exploded view of the actuating elements of the starter.

The present invention contemplates the production of a spring starting mechanism, particularly adapted for comparatively small combustion engines, as for example, outboard motors, power lawn mowers and similar power equipment, which is so designed that the operator merely actuates a manual control member having three positions, an inner, an outer and an intermediate position, for example, starting operations being achieved by withdrawing the lever to its outer position, rewinding operations being achieved by pushing the lever to its inner position and upon completion of the rewinding operation, the lever will be automatically moved to its intermediate neutral or spring retaining position. The spring is adapted to be rewound through a ratchet drive which is illustrated as being operated by a cam operatively connected to the combustion engine and engageable with a follower arm operatively connected to the rewinding mechanism. Means is provided for retaining the control member in its outer starting position until the spring has become fully unwound and similarly retain the control member in its inner spring winding position until the spring has become fully wound.

In cam actuated rewinding mechanisms, it is possible for the engine to stall with the cam follower in a high cam position, whereby upon manual rewinding of the spring, actuation of the mechanism to its spring holding position, following completion of the winding operation, is prevented and as a result of which it would be possible to inadvertently continue to wind the spring until parts were broken or damaged. The present invention provides for this contingency and is so designed that upon manual rewinding, the mechanism will be automatically tripped following completion of the winding operation, even though the cam follower and associated rewinding mechanism is on high cam and thus inoperative to trip the mechanism at the conclusion of the spring winding operation.

Referring to FIGS. 1, 2, 5 and 6, the reference numeral 1 indicates generally a housing, illustrated as comprising a base or bottom portion 2 and a cover member 3, forming a generally rectangular shaped container. The cover member 3 is illustrated as having peripheral flanges and may be secured to the bottom or base portion 2 by any suitable means, as for example, screws extending through the flange 4 and adjacent side wall of the bottom portion 2. Rotatably mounted in the housing is a main shaft indicated generally by the numeral 4 which extends through the bottom 5 of the base 2 and the cover 3, the upper end being illustrated as having a pair of flats 6 thereon for engagement with a suitable wrench or crank member to facilitate manual winding of the spring if necessary. Rigidly carried by the shaft 4 is a hub member 7 and a toothed ratchet wheel 8.

Means is also provided for operatively connecting the shaft 4 with the engine and for transmitting a starting torque to the latter, and for applying a rewinding movement to the shaft 4 following the starting of the engine. Such means comprises a clutch and drive mechanism indicated generally by the numeral 9, having a cup or body

member **11** secured to the engine drive shaft **12**, as hereinafter described in detail.

Operatively connected at one end to the hub **7** and at its opposite end to a post or pin **13** is an actuating spring **14**, only the end portions of which are illustrated, the intermediate portion of the spring being coiled around the hub **7**. The inner end of the spring is secured to the hub **7** by suitable means such as a tubular portion or eye **15** formed in the spring and adapted to be seated in a complemental bore **16**, the hub being cut away as indicated at **17** to effect a smooth transition of the inner end portion of the spring from its anchor to the periphery of the hub portion and eliminate any tendency to put a slight bend or kink in the spring. The outer end of the spring is provided with an eye **18** which encircles the post or pin **13** firmly mounted in the housing, thereby anchoring the spring end to the housing.

Spring retaining and winding mechanism

The shaft **4** and with it the ratchet wheel **8** is adapted to be rotated in a clockwise direction by the action of the spring **14** as it uncoils, the ratchet wheel being normally prevented from clockwise rotation by a stop pawl **21** which is pivotally supported on a post or pin **22** anchored to the bottom wall **5** of the housing and illustrated as extending through the cover member **3**, the pawl **21** being biased in a clockwise direction by a tension spring **23**, whereby the tooth **24** on the pawl normally engages the teeth on the ratchet wheel **8** as illustrated in FIG. 1. Also carried by the pawl **21** is a pin **25** which extends downwardly therefrom, as will be clear from a reference to FIG. 2.

The ratchet wheel **8** is adapted to be rotated in a counterclockwise direction by a drive pawl **26** pivotally mounted on a drive lever indicated generally by the numeral **27** which in turn is rigidly connected to a stub shaft **28** extending through the bottom wall **5** of the housing, the stub shaft in turn being rigidly connected to a cam follower arm **31**. The latter carries at its free end a rotatable roller **32** adapted to engage a cam surface **33** formed on the cup member **11**. The drive lever **27** and cam follower arm **31** are urged in a counterclockwise direction, as viewed in FIGS. 1 and 3, by a tension spring **34** having one end suitably anchored to the housing, as indicated at **35**, and its opposite end connected to an extension **36** rigidly connected to the drive arm **27**. The drive pawl **26** is pivotally mounted on a pin **37** extending upwardly from the drive arm **27** and is biased in a counterclockwise direction by a torsion spring **38** having an eye portion extending about the pin **37** with one end of the spring bearing on the pawl **26** and the opposite end bearing on a portion of the drive arm as will be apparent from a reference to FIG. 6.

Thus, as the cup **11** and with it the cam **33** is rotated, the cam follower arm **31** will be oscillated about the shaft **28**, in turn oscillating the drive lever **27** and drive pawl **26**, operative to transmit rotational movement to the ratchet wheel upon each revolution of the cam. As the ratchet wheel is rotated, the stop pawl **21** will retain the ratchet wheel in its advanced position and prevent the rotation of the ratchet wheel and shaft **4** in a direction to permit unwinding of the spring.

Control mechanism

Control of the spring winding and spring releasing operations is effected by manual actuation of a start and reset shaft or member **41** which is slidably mounted in the housing **1** adjacent the bottom wall **5** thereof, the member **41** being illustrated as formed from strip or sheet material having one end extending outwardly from the adjacent side wall of the housing and formed at its outer free end with an upright manual gripping portion or handle **42**, the member **41** extending through an opening **43** in the housing side wall. The member **41** is provided with a longitudinally extending elongated slot **44** therein through which the pin **22** extends and the member **41** is further guided by a headed stud **45**. The inner end of the member **41** is provided with a laterally extending portion **46** which is provided with an upwardly extending flange **47** and cam edge **47'**, particularly illustrated in FIGS. 2, 5 and 6, the member **41** being biased toward the left as viewed in FIGS. 1 and 2 by a tension spring **48**, one end of which is suitably engaged with the flange **47** and the opposite end with the screw **49** rigidly mounted on the bottom **5** of the housing, or other suitable rigid portion of the housing.

The member **41** is movable from an extreme inner position, as illustrated in FIG. 1, to an extreme outer position, as illustrated in FIG 4 and is provided with suitable means for releasably restricting outward movement of the member to an intermediate position as illustrated in FIG. 3, the particular means illustrated comprising a trigger member **50** which is pivotally mounted on the member **41** by a pin **51** and is biased in a clockwise direction as viewed in FIG. 1 by a torsion spring **52** having one end anchored on the offset end portion **53** of the trigger member **50** and the opposite end anchored to the member **41**, the associated end of the spring extending through a small aperture in the member **41**. The trigger member **50** may likewise be provided with a handle portion **54** adjacent the handle **42** and is formed with an abutment or shoulder **55** adapted to engage the adjacent housing side wall as illustrated in FIG. 3 to limit the outward movement of the start and reset shaft member **41**. However, by pivoting the trigger member in a counterclockwise direction from the position illustrated in FIG. 3 to that illustrated in FIG. 4, the shoulder **55** may be moved out of engagement with the housing side wall to permit outward movement of the start and reset member to the position illustrated in FIG. 4.

To prevent movement of the trigger member to a released position, while the spring is being wound (as illustrated in FIG. 1), and attendant possibility of the actuating member **41** moving to its outer starting position when the spring becomes fully wound, the trigger member may be provided with a protuberance **55'** engageable with the side wall of an upwardly extending flange or abutment **56** when the member **41** is in its spring winding position. The trigger member can thus be operated for effecting a start operation only after the member **41** has returned to its intermediate position.

Pivotally mounted on the pin **22** is an elongated latch member **57** which is provided with a transversely extending portion **58** having a downwardly extending flange or abutment **59**, and an upwardly extending flange or abutment **59'**, the latch member being biased in a counterclockwise direction as viewed in FIG. 1 by a torsion spring **61** which encircles the pin **22** and is formed with a hook portion at one end engaging the latch member **57** and a hook portion at the opposite end engaging the hook eye of the spring **23** engaged with the pawl **21**. The respective elements carried by the pin **22** may be retained in position thereon by any suitable means, as for example, a friction retaining ring **22'** or the like.

Pivotally supported on the post or pin **13** is a safety release lever **62** particularly illustrated in FIGS. 2, 5, 6 and 7, the latter having a laterally extending portion **63** and a downwardly extending flange or abutment **64**, the portion **63** forming a seat for the end eye or hook on the spring **23**, whereby the release lever **62** is biased in a clockwise position as viewed in FIG. 7. The spring **23** thus performs the dual function of biasing the pawl **21** and biasing the release lever **62**.

Also pivotally mounted on the post **13** and disposed above the release lever **62** as viewed in FIG. 1 is a main spring control member or lever indicated generally by the numeral **65** which is generally L-shaped, having two intersecting leg portions or arms **66** and **67**, the member being mounted on the pin **13** intermediate the ends of the arm **66**. The control member **65** is provided adjacent

the junction of the arms 66 and 67 with an upwardly extending flange portion 68, adapted to be disposed between the first and second coil of the main or actuating spring 14, the control member being biased in a clockwise direction by a torsion spring 69 having an eye extending around the post 13 with one leg engaged with the flange 68. The control member 65 is further provided with two downwardly extending flanges or abutments 71 and 72, the abutment 71 being disposed to engage the release lever 62 as the control lever 65 approaches the end of its counterclockwise movement as illustrated in FIG. 3, while the abutment 72 is positioned at the outer end of the arm 67 and adapted to engage the latch member 57 just before the member 65 reaches its extreme counterclockwise movement. The control lever 65 thus effectively controls the disengagement of either the projection 59 on the latch member 57 or the projection 64 on the release lever 62 with the upwardly extending flange 60 on the start and reset shaft 41.

Also pivotally mounted on the post 13 is a start interlock lever 73 which, as illustrated in FIGS. 5 and 6, is of generally U-shaped in transverse cross-section, having two substantially parallely extending arms 74 and 75, the former being of greater length than the latter and disposed below the same, as will be clearly apparent from a reference to FIG. 6, with the two arms being interconnected by an intermediate portion 76. The member 73 is biased in a counterclockwise direction as viewed in FIG. 1 by the adjacent end of the torsion spring 69 which end overlies the arm 74, the extreme end of the spring being looped around the adjacent edge of the arm as will be apparent from a reference to FIGS. 1 and 5. The arm 74 of the lever 73 is provided at its free outer end with an abutment 77 adapted to engage the upwardly extending flange 47 on the start and reset shaft 41 when the latter is in its extreme outer position as illustrated in FIG. 4, thereby preventing the return movement of the arm into the housing upon manual release thereof.

The arm 74 is also provided with a second abutment 79 adapted to engage the flange 47 on the shaft 41, when the latter is in its intermediate position as illustrated in FIG. 2, thereby preventing movement of the shaft 41 to winding position as long as the spring is fully wound.

Disengagement of the lever 73 from the flange 47 is accomplished by an upwardly extending flange 78 on the control lever 65 as illustrated in FIGS 1 and 5.

While the construction heretofore described utilizes the main spring control lever 65, to control position of the start interlock lever 73, the latter being engageable with the flange or abutment 78 of the lever 65, this junction can be achieved by direct action of the actuating spring 14. Such a construction is illustrated in FIG. 9, wherein the interlock lever 73 is provided with an extension 80 formed on the arm 74 of the lever and extending below the spring 14, the extension 80 terminating in an upwardly extending flange 81 adapted to be disposed at the outer or right side of the spring 14, whereby the latter may engage the same, operative to rotate the member 73 clockwise when the spring is fully unwound to a position corresponding to that illustrated in FIG. 1.

FIG. 9 also illustrates a modified construction of the arm 74 of the lever 73, whereby the abutment 79 is formed by notching the arm 74, the notch 82 forming the abutment 79' and an inclined edge 83 operative to cam the lever 73 in a clockwise direction when the start and reset shaft 41 is moved from the position illustrated in FIG. 3, to the starting position illustrated in FIG. 4, permitting a reduction in the pivotal travel of the lever 73 as compared with the original described construction, and providing direct actuation by the spring instead of through an intermediate member. This modification also illustrates the use of the main spring to confine the flange 68 between the last turn of the spring, and the free end of the latter, which is extended as indicated at 14' to engage the opposite face of flange 68, thus eliminate the necessity of an additional spring 69 for biasing the control lever 65.

Engine connections

The housing 1 may be mounted on the engine with which it is to be employed, by any suitable means, the details of which form no part of the present invention, whereby the axis of the drive shaft 12 of the engine is reasonably aligned with the axis of the main shaft 4 of the starter.

The clutch and drive mechanism 9, in addition to the cam 33, formed on the cup or body member 11, is provided with a clutch mechanism indicated generally by a numeral 84 and illustrated as including a toothed drive gear 85, rigidly connected to a threaded collar or hub 86, mounted on the adjacent threaded end of the main shaft 4.

Similarly, the cup member 11 is mounted on the drive shaft 12 of such an engine by a nut 87 threaded on the shaft and bearing on a reinforcing washer 88 disposed adjacent the bottom of the cup 11, whereby the latter is clamped between the washer and a shoulder formed on the shaft 12.

To facilitate axial alignment of the shafts 4 and 12, the hub 86 and hub 87 may be provided with suitable complemental pilot means, which, in the embodiment of the invention illustrated, comprises a counterbore 89 formed on the collar 86, adapted to receive a cylindrical portion 91 formed on the nut 87, the relative proportions of the parts being such that the starter housing may be readily positioned with the portion 91 disposed, with adequate clearance, in the counterbore 89, thereby effectively aligning the respective shafts, and following which the mounting means for attaching the starter to the engine may be secured to retain the housing in the desired position.

Cooperable with the toothed drive gear 85 are a pair of dogs 92, each supported on a suitable stud pin 93 rigidly carried by the cup 11, the dogs being biased in a direction to engage the gear 85 by respective torsion springs 94, each of which is formed with an eye portion encircling the associated stud, and respective legs terminating in transversely extending portions engageable with the associated dog and the adjacent wall of the cup member 11. Each stud 93 preferably is provided with a suitable retaining lock ring 95 or the like to maintain the parts in assembled relation.

Referring to FIG. 1, it will be noted that the dogs 92 are not diametrically opposed with respect to the axis of the shaft 4, but have their radial center lines offset approximately 12½ degrees, and in the case of a gear 85 having 16 teeth thereon, as illustrated, such offset would correspond to a peripheral distance of approximately one-half tooth. Thus, when it is desired to actuate the starter, at most approximately one-half tooth would be the greatest relative movement between the gear 85 and one of the dogs 92 before locking engagement therebetween, thereby reducing the shock loads on the parts which might otherwise be produced if such travel were greater.

Operation

As previously mentioned, the operation of the device is controlled through the start and reset shaft 41, which is adapted to be manually actuated by means of the handle portion 42 in conjunction with the handle portion 54 of the trigger member 50.

Assuming that the spring has been completely unwound, the outer end of the spring will assume the position illustrated in FIG. 1, and upon pushing of the handle 42 of the reset shaft 41, the parts will assume the positions illustrated, which are as follows: The reset shaft 41 will be retained in its inner position, as illustrated, by the downwardly extending flange or abutment 64 on the safety release lever 62, the latter assuming the position illustrated in FIG. 7. The stop or holding

pawl 21 is urged in a counterclockwise direction about the pin 22 by the spring 23 whereby the tooth 24 of the pawl is engaged with the teeth on the ratchet wheel 8, preventing clockwise movement of the latter. Simultaneously therewith the cam follower arm 31 is free to move in a counterclockwise direction under the action of the spring 34 acting through the extension 36 of the drive lever 27 whereby the rotation of the cam 33 by the action of the engine will oscillate the lever 31 and thus the drive lever 27. The drive pawl 26, carried thereby, is urged into engagement with the ratchet wheel 8 by the torsion spring 38. Thus, each time the cam 33 makes one revolution, the lever 31, and through the associated mechanism, the drive pawl 26 will be oscillated to advance the ratchet wheel 8 in a counterclockwise direction, thereby winding the spring 14.

It will be noted that when the latch member 57 is in the position illustrated in FIG. 1, the downwardly extending flange or abutment 59 thereon is disposed in the path of the upwardly extending flange 60 on the shaft 41, whereby the latter would be unable to return to the immediate position illustrated in FIG. 3 as long as the latch member 57 remains in the illustrated position, even though the safety release lever 62 were pivoted in a counterclockwise direction to move the downwardly extending flange 64 thereon out of the path of the flange 60 on the actuating shaft 41. However, as illustrated in FIG. 7, each time the lever 31 reaches the low point on the cam 33 the pin 37 associated with the drive pawl 26 will engage the upwardly extending flange 59' on the latch member 57, thereby camming the latter in a clockwise direction about the pin 22 to the position illustrated in FIG. 7, whereby the downwardly extending projection 59 on the latch member has moved out of the path of the upwardly extending flange 60 on the actuating shaft 41.

As the spring 14 approaches its fully wound position, the outer end thereof will assume the position illustrated in FIG. 3, such movement of the spring, acting through the upwardly extending flange 68 on the main spring control lever 65, pivoting the latter in a counterclockwise direction to the position illustrated in FIG. 3, such movement resulting in engagement of the downwardly extending projection 71 on the lever 65 engaging the edge of the safety release lever 62 and moving the latter counterclockwise to the position illustrated in FIGS. 3, 4, and 8, whereby the downwardly extending flange 64 thereon is moved out of the path of the upwardly extending projection 60 of the actuating shaft 41 to release the latter from its position illustrated in FIG. 1.

Assuming that the cam follower arm 31 is on high cam, as illustrated in FIG. 1, the latch member 57 will be in the position therein illustrated, whereby the shaft 41 will engage the downwardly extending flange 59 on the latch member 57 and be restricted from further movement in a direction to the left as viewed in FIGS. 1 and 8. In such case, the actuating shaft 41, latch member 57 and safety release lever 62 will be in the positions illustrated in FIG. 8. As the cam 33 continues its rotation and the cam follower arm 31 moves to low cam, the pin 37 on the drive lever 27 will engage the upwardly extending projections 59' on the latch member 57 operative to cam the latter in a clockwise direction to the position illustrated in FIG. 7 thereby moving the downwardly extending flange or projection 59 on the latch member out of the path of the upwardly extending flange 60 on the actuating shaft and permitting the latter to move to the left under the action of the spring 48, such movement ultimately being halted by engagement of the abutment 55 on the trigger member 50 with the adjacent wall of the housing. The spring will now be fully wound and the various parts will assume the positions illustrated in FIG. 3.

It will be noted that when the parts are in the fully wound position the upwardly extendwing flange 78 on the control lever 65 will be rotated out of operative engagement with the start interlock lever 73, permitting the abutment 79 on the latter to engage the upwardly extending flange 47 on the actuating shaft 41.

As the shaft 41 moves to its intermediate position as illustrated in FIG. 3, the upwardly extending flange 60 thereon will engage the lower end of the drive pawl 26, as viewed in FIG. 3, operative to cam the pawl in a clockwise direction about the pin 37 until the upper end of the pawl engages a projection on the extension 36 of the drive lever 27, following which the pawl and drive lever will move as a unit, whereby further movement of the shaft 41 will result in a clockwise movement of the drive lever 27 and parts associated therewith, thereby moving the cam follower arm 31 in a clockwise direction and disengaging the roller 32, carried thereby, from the cam 33. During such rewinding operation, the clutch 84 between the shaft 4 of the starting device and the drive shaft 12 of the engine is inoperative as centrifugal force resulting from the rotation of the cup 11 on the drive shaft 12 of the engine will urge the dogs 92 in radially outward direction about their associated studs, out of disengagement with the drive gear 85. The starter is thus completely disengaged from the engine.

When the engine is stopped, as the drive shaft 12 slows down and comes to a stop, the springs 94 will again urge the dogs 92 into engagement with the drive gear 85 whereby the dogs are readied for the next starting operation.

The starting operation is initiated merely by moving the trigger member 50 to the position illustrated in FIG. 4 thereby moving the shoulder 55 out of engagement with the adjacent inner face of the housing side wall, following which the actuating shaft 41 may be readily moved in an outward direction to the position illustrated in FIG. 4.

Such action will have no effect on the drive lever 27, cam follower arm 31 and drive pawl 26 as the latter remains engaged with the upwardly extending flange 60 on the actuating shaft. Likewise the latch member 57 and the safety release lever 62 remain in positions illustrated in FIG. 3.

Such movement of the actuating shaft 41 to the left, as viewed in the drawings, will result, however, in engagement of the cam edge 47' on the latch member with the pin 25 carried by the stop pawl, camming the pawl to the position illustrated in FIG. 4 and resulting in disconnection of the pawl from the ratchet wheel 8, thereby releasing the spring 14 which is thus operative to rotate the hub 7 and shaft 4 in a clockwise direction. Such rotation of the drive gear 85, transmitted through the dogs 92 to the cup 11 and shaft 12 of the engine will result in the application of the starting torque of the drive shaft 12.

At this point, all of the respective parts will assume the positions illustrated in FIG. 4 with the exception of the main control lever 65, interlock lever 73, and adjacent end of the spring 14, which will assume the positions illustrated in FIG. 1 as a result of the complete unwinding of the spring, permitting the control lever 65 to move in a clockwise direction under the action of the spring 69 and through the upwardly extending projection 78, pivoting the interlock lever 73 in a clockwise direction to the position illustrated in FIG. 1. Assuming the engine has started, the actuating shaft 41 may then be returned to the position illustrated in FIG. 1 to initiate spring winding operation heretofore described.

It will be noted from a reference to FIGS. 3 and 4 that the interlock lever 73 performs two functions, the first taking place when the parts assume the positions illustrated in FIG. 3 at the end of the spring winding operation, as the main control lever 65 will reach the position illustrated in FIG. 3, disengaging the flange or projection 78 from the interlock lever 73 to permit the latter to engage the upwardly extending flange 47 on the actuating shaft 41. In such position the abutment or shoulder 79 on the arm 74 of the interlock lever 73 will be disposed

in the path of the flange 47 insofar as movement of the latter to the right is concerned, thereby restricting inward movement of the actuating shaft 41 from the positions illustrated in FIG. 3 to the spring winding position illustrated in FIG. 1, and thus preventing the reactuation of the spring winding elements. Consequently, once the spring has been wound and the actuating shaft 41 returned to its intermediate position, as illustrated in FIG. 3, the shaft cannot again be moved inwardly until the spring 14 is fully unwound.

Likewise, assuming the actuating shaft 41 is withdrawn to the starting position as illustrated in FIG. 4, the interlock lever 73 will move in a counterclockwise direction to dispose the abutment 77 in a position to restrict inward movement of the actuating shaft 41 from the position illustrated in FIG. 4 until the spring 14 is fully unwound.

Consequently, the interlock lever 73 prevents movement of the actuating shaft, following winding of the spring from its intermediate position illustrated in FIG. 3 to the winding position illustrated in FIG. 1, such movement being permitted only when the spring has become fully unwound to permit the interlock lever 73 to be moved to its position illustrated in FIG. 1. Likewise, the interlock lever also prevents inward movement of the actuating shaft, once it has been withdrawn to the starting position illustrated in FIG. 4, until the spring has been fully unwound and has released the interlock lever from the flange 47 on the actuating shaft.

The operation of the modified construction illustrated in FIG. 9 is for all practical purposes substantially the same as that heretofore described. Thus when the spring is unwound, the control lever 65 will assume the position illustrated in FIG. 9, the interlocking lever 73, however, being rotated in a counterclockwise direction from a position equivalent to that illustrated in FIG. 4 to the position illustrated by the direction action of the adjacent end of the spring 14 bearing on the upwardly extending flange 81 carried by the extension 80 of the arm 74 of the lever 73. The general operation of the interlock lever is substantially the same as that heretofore described with the exception that when the actuating shaft is moved from its intermediate position corresponding to FIG. 3 to the starting position illustrated in FIG. 4, the flange 47 on the shaft 41 will engage the inclined edge 83, camming the arm 74 clockwise to permit the actuating shaft to continue its outward movement and ultimate engagement of the abutment 77 with the flange 47.

The construction illustrated in FIG. 9 has two advantages, the first being that a lesser amount of a pivotal travel of the interlock lever 73 is required, while the action of both the control lever 65 and the interlock lever 73 is somewhat more responsive to the position of the end of the spring 14 to provide a more precise action of the respective levers.

It will be appreciated that it is possible for the engine to stall during the spring winding with the cam follower arm 31 in high cam position, in which case the control lever 65, drive lever 27 and pawl 26 will be in the positions illustrated in FIG. 1, with the latch member 57 disposed to interlock the lever 41 in its inner position. In such event, upon manual winding of the spring by engagement of a crank or other suitable tool with the flats 6 on the upper end of the shaft 4, no further movement of the drive lever 27 and pawl 26 would take place until the shaft 41 was released to its intermediate position and as this could not occur while the latch member 57 remains in such position, the associated mechanism would be locked and it would be possible to continue winding until the spring 14 broke or other damage occurred.

This possibility is eliminated by the provision of the arm 67 on the control lever 65, the free end of which arm terminates in the downwardly extending projection or abutment 72. The proportions of the arm 67 and flange 72 are such that under normal conditions such parts have no function, the release of the shaft 41 taking place following adequate winding of the spring, when the arm 67 is in the position illustrated in FIG. 4. However, under the manual winding conditions just described, when the spring becomes fully wound, corresponding to complete winding under automatic operation, the safety release lever 62 will be actuated as heretofore described by engagement of the downwardly extending abutment or flange 71 with the adjacent edge of the release lever, whereby the parts will assume the position illustrated in FIG. 8. At this point, the safety release lever 62 has been pivoted in a counterclockwise direction, releasing the upwardly extending flange 60 on the shaft 41, permitting the latter to move into engagement with the downwardly extending flange 59 on the latch member 57 and all of the parts will then assume the positions illustrated in FIG. 8. Upon continuing the winding of the spring the control lever 65 will continue its counterclockwise movement, bringing the flange or abutment 72 on the arm 67 of the control lever into engagement with the top edge, as viewed in FIG. 8, of the latch member 57 operative to apply force thereto in a direction to pivot the latch member in a clockwise direction. Such action will continue until the downwardly extending flange 59 of the latch member is moved out of operative engagement with the end of the upwardly extending flange 60 on the shaft 41 permitting the latter to return to its intermediate position, as illustrated in FIG. 3. As will be apparent from a reference to FIGS. 5 and 6, the arm 67 is upwardly offset adjacent the pin 37 to provide adequate clearance therebetween.

It will be appreciated from the above description that I have provided a comparatively simple starting mechanism employing merely a single manually actuatable member or shaft for controlling all of the normal starting and winding operations, the control member having an intermediate position at which the spring is fully wound and from which the control member may be moved to initiate the starting operation, following which it may be moved to a position to initiate the spring winding position.

Likewise, novel means is provided for insuring a proper sequence of operation whereby improper actuation of the control member or shaft is completely prevented, the interlocking structures preventing movement of the control member to a spring winding position when the spring is already fully wound, and preventing return of the control member from a starting position until the spring has become fully unwound. It will also be apparent that I have provided novel means for securing operation of the respective parts at a conclusion of a manual winding of the spring, and novel means for insuring satisfactory alignment of the starting mechanism with respect to the drive shaft of an engine on which it is to be mounted.

Having thus described my invention it will be obvious that various immaterial modifications may be made in the same without departing from the spirit of my invention; hence I do not wish to be understood as limiting myself to the exact form, arrangement or combination of parts herein shown or described, or uses mentioned.

What I claim as new and desire to secure by Letters Patent is:

1. In a starter mechanism for a combustion engine, the combination of a housing, a rotatable drive shaft extending transversely through said housing and having a free end extending from the bottom wall of said housing, a coiled spring positioned in said housing, having its inner end operatively connected to said shaft, and its outer end fixed to said housing, a one-way clutch disposed exteriorly of said housing and having a driving member operatively connected to the free end of said drive shaft and a driven member constructed for operatively fixed connection to the drive shaft of such an engine, a ratchet gear positioned in said housing and rigidly mounted on said shaft, a drive lever, disposed in said housing, rigidly carried by a shaft

pivotally supported by said housing and extending through the bottom wall thereof, a drive pawl carried by said drive lever and releasably engageable with said ratchet gear, a cam follower arm disposed exteriorly of said housing and rigidly mounted on the exterior end of said last mentioned shaft, whereby said arm and lever are rigidly connected therethrough, cam means carried by said driven member engageable with said cam following arm operative to oscillate the latter and said lever and thereby reciprocate said pawl to rotate said ratchet gear in spring winding direction, a stop pawl carried by said housing engageable with said ratchet gear to prevent reverse rotation thereof upon return movement of said drive pawl, a manual control member having means operatively associated with said drive pawl and actuating means therefor, for rendering the same inoperative in one position of said control member and operative in another position thereof, a main spring control lever pivotally supported in said housing actuatable by movement of said spring for controlling the movement of said manual control member from such operative position, said manual control member being operatively connected to said stop pawl, and operative in a third position to release said stop pawl from said ratchet gear to initiate a starting cycle, means controlled by said main spring control lever for preventing engagement of said stop pawl with said ratchet gear, following actuation of said manual control member to starting position until the spring has been unwound, means for preventing operative disengagement of said stop pawl following actuation of said manual control member to rewind position until said spring is fully wound, and manually releasable means for preventing movement of said manual control member to start position following rewinding of the spring.

2. A starter mechanism as defined in claim 1, wherein the driving member of said one-way clutch comprises a toothed wheel and said driven member comprises a cup-shaped housing, a plurality of dogs pivotally carried by said housing for engagement with said toothed wheel, resilient means urging said dogs in engagement with said toothed wheel, said dogs being movable out of disengagement therewith under the action of centrifugal force when said housing is rotated by such an engine, a locking member attachable to the drive shaft of such an engine, for securing the clutch housing thereto, and cooperable pilot means carried by said locking member and the starter drive shaft for effecting axial alignment of said starter and engine drive shafts.

3. A starter mechanism as defined in claim 2, wherein said toothed wheel is provided with a hub member attached to said starter drive shaft, said pilot means carried by said hub and locking members, with one of the same having an axial aligned projection thereon, and the other member having an axial aligned recess therein of a size to receive said projection.

4. A starter mechanism as defined in claim 1, wherein said means for preventing operative disengagement of said stop pawl during rewinding comprises a spring-biased safety lever, operatively disposed to normally restrict return movement of said manual control member from rewinding position, said main spring control lever having means thereon operative when said spring is fully wound, to move said safety lever to release said control member.

5. A starter mechanism as defined in claim 4, wherein said means for preventing engagement of said stop pawl during starting operations comprises a spring-biased start interlock lever disposed to normally restrict return movement of said manual control member for its starting position, said main spring control lever having means thereon, operative when said spring is fully unwound, to move said start interlock lever to release said control member.

6. A starter mechanism as defined in claim 5, wherein said start interlock member has means thereon for restricting movement of said manual control member to rewinding position when said spring is fully wound.

7. A starter mechanism as defined in claim 6, comprising the further combination, a spring-biased latch member having means thereon for normally restricting return movement of said manual control member when the latter is in rewinding position, and further means on said latch member for transmitting movement of said drive lever to said latch member operative to move the latter out of such a restricting position when the drive pawl is in non-driving position at the end of its return movement.

8. A starting mechanism as defined in claim 7, wherein said main spring control lever is provided with means engageable with said latch member, operative to move the latter out of operative engagement with said control member, independently of the operation of said drive lever, when the actuating spring reaches a maximum wound condition.

9. A starter mechanism as defined in claim 8, wherein the driving member of said one-way clutch comprises a toothed wheel, and said driven member comprises a cup-shaped housing, a plurality of dogs pivotally carried by said housing for engagement with said toothed wheel, resilient means urging said dogs in engagement with said toothed wheel, said dogs being movable out of disengagement therewith under the action of centrifugal force when said housing is rotated by such an engine, a locking member, attachable to the drive shaft of such an engine, for securing the clutch housing thereto, and cooperable pilot means carried by said locking member and the starter drive shaft for effecting axial alignment of said starter and engine drive shafts.

10. A starter mechanism as defined in claim 9, wherein said toothed wheel is provided with a hub member attached to said starter drive shaft, said pilot means being carried by said hub and locking members, with one of the same having an axial aligned projection thereon, and the other member having an axial aligned recess therein of a size to receive said projection.

11. In a starting mechanism for a combustion engine, the combination of an actuating spring, means for rewinding said spring by operation of such an engine, means for releasably retaining said spring in wound condition, releasable means for operatively connecting said spring to such an engine for initiating a starting torque thereto, a manually actuatable control member having a starting position, a spring winding position, and an intermediate inoperative position, means for operatively connecting said control member with said spring winding means, to initiate the actuation of the latter, when said control member is in its spring winding position, and means operatively connecting said control member with said spring retaining means, to release the latter and initiate a starting torque, when said control member is in its starting position, said spring retaining means being operative to retain said spring in wound position when said control member is in its intermediate inoperative position.

12. A starting position as defined in claim 11, wherein said spring winding means includes a ratchet wheel operatively connected to said spring, a driving pawl reciprocable by operation of such an engine, and said spring retaining means comprises a retaining pawl releasably engageable with said ratchet wheel.

13. A starting mechanism as defined in claim 12, comprising in further combination, means operable by said actuating spring for retaining said spring rewinding means in operation until said spring is fully wound.

14. A starting mechanism as defined in claim 13, comprising in further combination, means for preventing disconnection of said spring rewinding means while said driving pawl is operatively rotating said ratchet wheel.

15. A starting mechanism as defined in claim 14, wherein said means for retaining the spring rewinding means in operation is operative to restrict movement of said manual control member from its spring winding position to its intermediate position until the spring is fully wound, said means for preventing disconnection thereof being operative to independently retain said manual control

member in its spring winding position while said driving pawl is operatively rotating said ratchet wheel.

16. A starting mechanism as defined in claim 13, comprising in further combination, means operable by said actuating spring for preventing movement of said control member to rewinding position other than when said spring is in unwound condition.

17. A starting mechanism as defined in claim 13, comprising in further combination, means operable by said actuating spring, when said control member is in starting position, for preventing movement of said control member from starting position other than when said spring is in unwound condition.

18. A starting mechanism as defined in claim 13, comprising in further combination, manually releasable means operatively connected with said manual control member for normally preventing movement of the latter to starting position.

19. In a starting mechanism for a combustion engine, the combination of an actuating spring, means for rewinding said spring by operation of such an engine, means for releasably retaining said spring in wound condition, releasable means for operatively connecting said spring to such an engine for initiating a starting torque thereto, a manually actutable control member having three operational positions, means for operatively connecting said control member with said spring winding means, to initiate the actuation of the latter, when said control member is in one of its positions, and means for operatively connecting said control member with said spring retaining means, to release the latter and initiate a starting torque, when said control member is in another of its positions, said control member being inoperative when in its third position to actuate either said spring winding means or said spring retaining means.

20. A starting mechanism as defined in claim 19, comprising in further combination, means for preventing disconnection of said spring rewinding means while the same is applying a winding force to said spring.

21. A starting mechanism as defined in claim 19, comprising in further combination, means for preventing actuation of said rewinding means other than when said spring is in unwound condition.

22. A starting mechanism as defined in claim 19, comprising in further combination, comprising means for preventing actuation of said spring retaining means while said spring is being unwound.

23. A starting mechanism as defined in claim 13, comprising in further combination, manually releasable means for normally preventing movement of said control member to a starting position.

24. A starting mechanism as defined in claim 19, comprising in further combination, means associated with said releasable means for operatively connecting said spring to such an engine for facilitating substantial operating alignment of said starting mechanism with such an engine.

References Cited by the Examiner

UNITED STATES PATENTS

1,001,277	8/1911	Johnson	123—185
3,010,443	11/1961	Lyvers	123—179

MARK NEWMAN, *Primary Examiner.*

RICHARD B. WILKINSON, DONLEY J. STOCKING, *Examiners.*

L. M. GOODRIDGE, *Assistant Examiner.*