Nov. 10, 1964 E. R. JABLONSKI ETAL 3,156,418

POLE TOP MOUNTED LUMINAIRE

Filed Sept. 5, 1961 2 Sheets-Sheet 1

Fig. 2

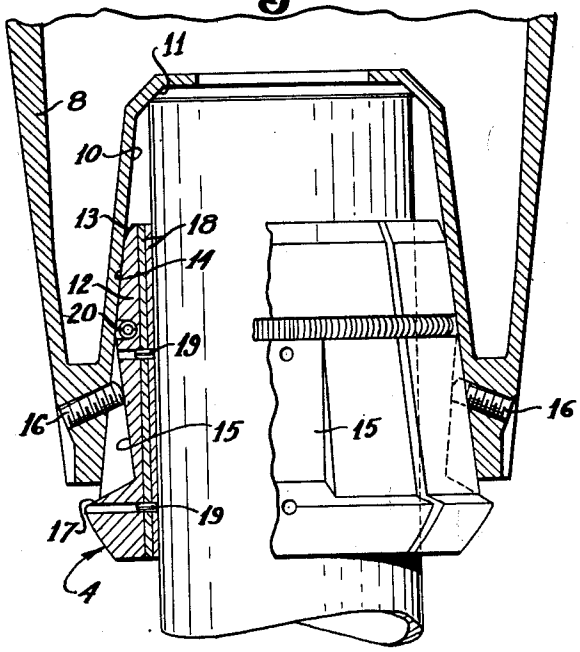

Fig. 1

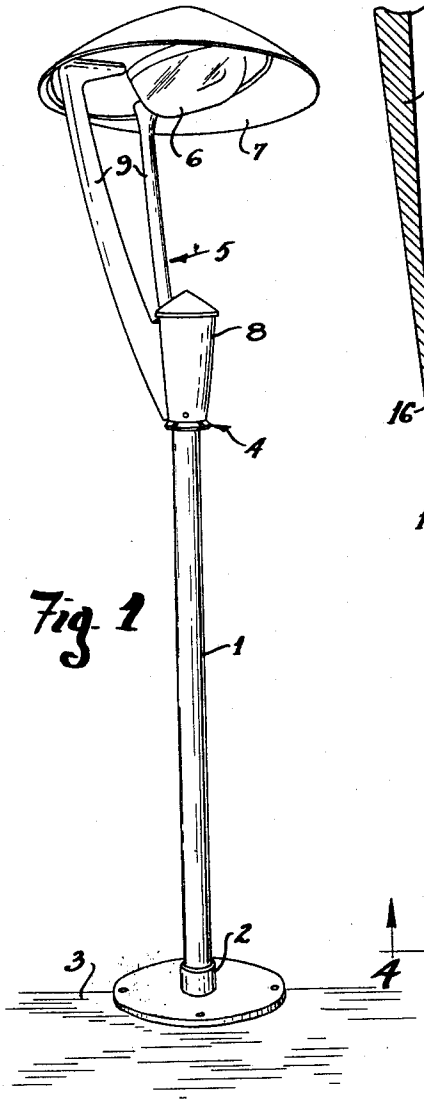

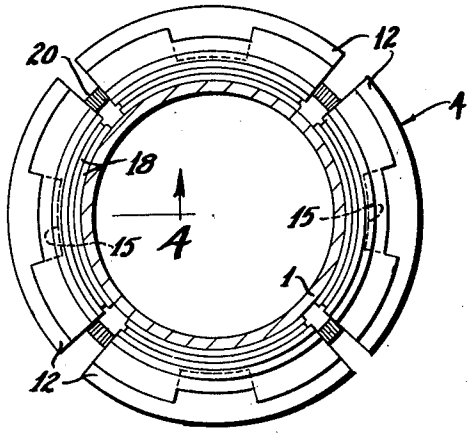

Fig. 3

INVENTOR.
EDWARD R. JABLONSKI
HAROLD A. VAN DUSEN, JR.
BY
Andrus & Starke

Attorneys

Nov. 10, 1964 E. R. JABLONSKI ETAL 3,156,418

POLE TOP MOUNTED LUMINAIRE

Filed Sept. 5, 1961 2 Sheets-Sheet 2

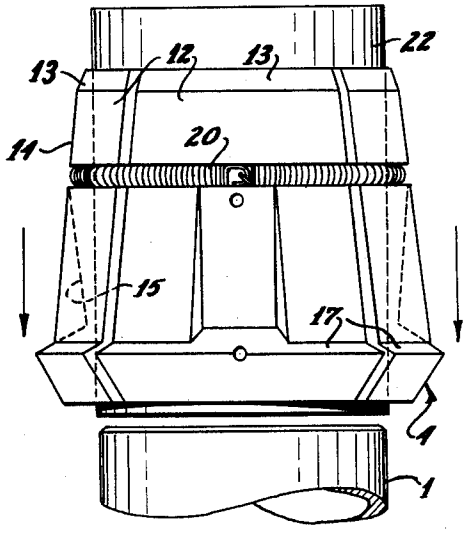

Fig. 5

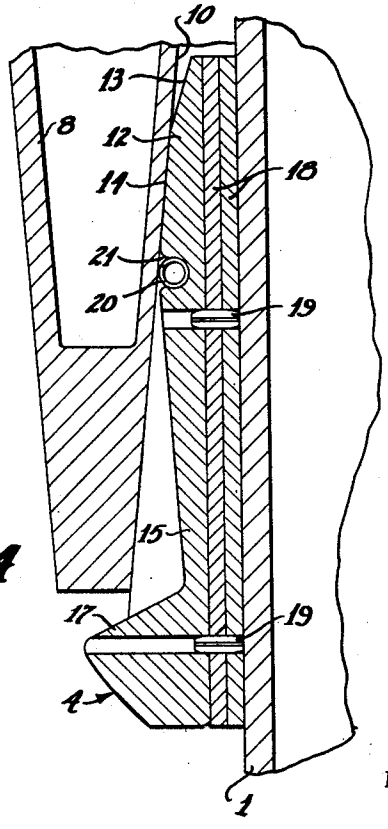

Fig. 4

INVENTOR.
EDWARD R. JABLONSKI
HAROLD A. VAN DUSEN, JR.
BY
Andrus & Starke
Attorneys

United States Patent Office 3,156,418 Patented Nov. 10, 1964

3,156,418

POLE TOP MOUNTED LUMINAIRE

Edward R. Jablonski and Harold A. Van Dusen, Jr., South Milwaukee, Wis., assignors to McGraw-Edison Company, Milwaukee, Wis., a corporation of Delaware

Filed Sept. 5, 1961, Ser. No. 135,932
12 Claims. (Cl. 240—84)

This invention relates to a collet attachment assembly and particularly to a collet attachment assembly for removably securing a luminaire to the top of a vertical mounted pole.

Various considerations have resulted in the providing of pole top mounted luminaires for lighting of certain areas such as parks, residential areas and the like. Generally, in the past such designs have only been applied in installations requiring relatively small luminaires.

The luminaires are mounted by a base portion telescoped over the upper end of the pole and held in place by set screws which thead through the base member and bear against the upper end of the pole. Set screw attachments have generally been found desirable as a very convenient means for accommodating the various diameters of the several standard tapered poles employed for luminaire mounting.

The set screw attachment results in relatively high concentrated bearing forces at the set screw attachment points on the pole and are only satisfactory for small luminaires. Larger luminaires develop very substantial bending loads at the top of the poles as a result of wind loading. Substantial vibration loads are also developed as a result of changing wind loads. Set screw attachments have not therefore been found generally satisfactory because the high concentrated bearing forces often result in deformation of the pole and loosening of the luminaire.

The present invention is directed to and provides a collet type coupling or attachment assembly which rigidly secures a luminaire to the top of a metal pole with a distribution of the clamping forces uniformly over a substantial area of the pole and around the circumference thereof in order to absorb very large bending loads.

It is an object of the present invention to provide an improved means of interconnecting a luminaire or a similar member to a supporting pole through releasable wedging means which increase the bearing area and provide uniform circumferential distribution of a load.

Another object of this invention is to provide a readily assembled and compact attachment assembly which can be employed without destroying the aesthetic values so important in modern day lighting.

It is another object of the present invention to provide a collet type luminaire attachment assembly including means for accommodating various standard pole diameters thereby reducing the required inventory of stock of various attachment assemblies.

Generally, in accordance with the present invention, the slip fitter or attachment assembly includes the provision of a conical opening in the bottom-most part of the luminaire of a somewhat larger size than maximum poles which will be employed to support the luminaire. A plurality of arcuate collet segments having outer tapered surfaces are tightly and firmly wedged between the pole shaft and the conical opening. The collet segments have a relatively substantial depth and circumferential width. The collet segments establish high compressive loading radially over the circumference of the pole. The compressive loading is uniformly distributed about the pole and over a substantial area of the pole.

The collet segments may include a lower radially projecting ledge immediately adjacent the lower end of the luminaire base. The collet segments are removed by driving the segments downwardly from the wedging position with any suitable means acting on the ledge.

In accordance with another aspect of the present invention, the individual collet segments are sub-assembled upon a form having the outer perimeter of the top of a pole. The collet segments are slidably held on the form by suitable spring means. In assembly, the form is placed on the top of the pole and the collet segment slid onto the pole. The luminaire is then placed onto the pole and the collet segments forced upwardly into clamping engagement within the conical opening.

In accordance with still another aspect of this invention, the collet segments are provided with a reverse taper or slope section. A set screw or other suitable locking means is secured to the luminaire base and bears on the reverse slope sections. With this additional positive locking of the segments, very severe vibration loads can be accommodated without loosening the luminaire.

Each of the collet segments is preferably formed with a plurality of shims on the inner surface of the collet segments. The collet segment with the shims is formed to accommodate a minimum diameter pole. To accommodate increasing diameter poles, it is merely necessary to remove the required number of shims from each of the collet segments. This provides a very simple and inexpensive means of accommodating the various diameter poles which will be encountered in commercial practice.

The drawings furnished herewith illustrate the best mode presently contemplated for carrying out the invention.

In the drawings:

FIG. 1 is a side elevational view of a pole top mounted luminaire unit;

FIG. 2 is an enlarged fragmentary view of the luminaire shown in FIG. 1 and having a portion broken away and sectioned to show details of construction;

FIG. 3 is a top elevational view of the collet assembly disposed upon a vertical pole;

FIG. 4 is a vertical section taken on line 4—4 of FIG. 3 with a portion of the luminaire added; and

FIG. 5 is a side elevational view showing a sub-assembly for mounting of the collet sub-assembly onto the luminaire supporting pole.

Referring to the drawings and particularly to FIG. 1, a pole top mounted luminaire unit is shown including a vertically upstanding pole 1 set in and supported by a pole base 2 which is suitably secured to the adjacent ground area 3. An anchoring collet attachment assembly 4, constructed in accordance with the present invention, rigidly secures or seats a luminaire 5 on the upper end of the pole 1.

The illustrated luminaire 5 may be of any suitable construction and includes a lamp 6 mounted beneath a refractor and reflector top cover unit 7. A base 8 is integrally connected with the top cover unit 7 by a pair of vertically extending support arms 9.

The base 8 is a generally hollow housing within the upper portion of which may be supported the necessary lighting control elements, not shown; for example, the ballast, capacitors and the like if the lamp 6 is a mercury vapor unit. The base 8 includes a lower frusto conical opening or chamber 10 terminating in an inner horizontal positioning ledge 11. The larger diameter of chamber 10 is in the lower plane of the base 8 for telescoped positioning over the top of the pole 1. Ledge 11 rests

on the top edge of pole 1 to properly position the luminaire 5.

The collet attachment assembly 4 is releasably wedged in clamping relation between the base and the pole 1 within chamber 10 and transmits the bearing loads on the luminaire 5 to the pole 1.

The illustrated collet attachment assembly 4 includes four arcuate collet segments 12 which are vertically aligned and circumferentially arranged about the pole 1. The collet segments 12 are similarly wedged between the pole 1 and the base 8 within the chamber 10. Each collet segment 12 is slightly less than one-quarter of the circumference of the top of pole 1 and projected substantially into the chamber 10 to establish a large loading or bearing area. The wedged collet segments 12 establish a high compressive load radially of the pole 1 with the load distributed over the substantial area of the pole 1, as follows.

Referring particularly to FIG. 2, the outer surface of each segment 12 is tapered and includes an initial encircling tapered portion 13 having an included angle somewhat greater than that of the chamber 10 for ready insertion of each of the segments 12 into the lower end of the chamber. Immediately adjacent the taper area 13 is a wedging tapered portion 14 having an included angle generally corresponding to the taper of the wall of chamber 10.

The included wedging taper is preferably 13 degrees. This has been found to be a substantially critical angle providing a very rigid self-locking of the collet segments 12 in position. A greater angle reduces the self-locking of the collet segments whereas a smaller angle reduces the variation of pole diameters that can be accommodated by any particular set of collet segments.

Each collet segment 12 also includes a reverse slope section 15 extending vertically centrally of the wedging tapered portion 14.

Four set screws 16 are circumferentially spaced in accordance with the slope sections 15 of the four collet segments 12. The set screws 16 are threaded through suitable tapped openings in the lower portion of base 8 and the inner ends of the set screws 16 bear upon the corresponding aligned reverse slope sections 15. Although the frictional forces of the collet segments 12 in the wedged position normally provide a sufficient holding power, the set screws 16 provide a positive means of maintaining the collet segments 12 in position if severe vibration loads are encountered.

A radial lip or ledge 17 is integrally formed with the lowermost portion of each collet segment 12. In the assembled relation, the ledge 17 is disposed immediately below the lower end of base 8. Ledge 17 accommodates a drift pin or similar tool, not shown, for driving of the wedged segments 12 from the wedged position whenever the luminaire 5 is to be removed.

A pair of collet shims 18 is secured to the inner surface of each collet segment 12. The shims 18 correspond to the inner configuration of each of the collet segments 12 to maintain the inner bearing surface of the collet segments. Locking pins 19 are press fitted within suitable aligned radial openings in the collet segments 12 and the collet shims 18 to releasably hold the collet shims 18 in position.

The collet segments 12 with the collet shims 18 attached are designed to accommodate a minimum diameter pole. When the collet attachment assembly 4 is to be employed with a larger diameter pole, one or more of shims 18 is removed in accordance with the variation permitted by the shims. Shims 18 may be removed in any manner such as by prying it off with a screwdriver or the like. The locking pins 19 which will protrude outwardly after removal of a shim 18 can be tapped flush with the inner diameter to eliminate interference with proper operation of the collet assembly 4.

In commercial practice, each shim is of one-eighth inch thickness to provide a total variation of one-half inch in diameter which is sufficient to compensate for the various diameters of standard poles.

As shown in FIGS. 2–4, an endless coil spring 20 encircles the four collet segments 12 at the transition from the tapered portion 13 to the wedging tapered portion 14. The four collet segments 14 include vertically aligned and circumferentially extending recesses 21 to accommodate endless coil spring 20 without interference with the wedging action of the collet segments 12. The endless coil spring 20 functions only during the assembly and disassembly of the collet assembly 4 and forms a part of a sub-assembly shown in FIG. 5.

Referring particularly to FIG. 5, the collet segments 12 are pre-assembled on a cylindrical form 22 of cardboard or other suitable material. The diameter of form 22 is substantially equal to the maximum diameter of a pole with which the collet assembly 4 may be employed. The encircling coil spring 20 frictionally holds the collet segments 12 slidably mounted on the form 22.

In mounting of luminaire 5, the sub-assembly shown in FIG. 5 is placed on the top of the pole 1 and the collet segments 12 manually pushed downwardly onto the upper portion of the pole 1. The spring 22 holds the collet segments 12 on the pole 1. If necessary, one or more of the collet shims 18 are first removed to provide the most desirable outer circumference of the collet attachment assembly 4 and the pole 1. The luminaire 5 is then placed over the top of the pole 1 and the set of four collet segments 12 is pushed upwardly into slight clamping engagement within chamber 10. The four collet segments 12 are finally driven into place with a hammer or other suitable tool, not shown, to establish the compressive load attachment of the luminaire 5 to the pole 1. Set screws 16 are threaded into bearing engagement with the reverse slope sections 15 of the collet segments 12 to insure positive locking of the collet segments 12 in place under severe vibration loads and the like.

When it is desired to remove the luminaire 5, the set screws 16 are loosened and a drift pin or the like, not shown, is used on the ledges 17 of collet segments 12 to force the collet segments 12 from the wedging position.

Although the present invention is particularly suited for the attachment of luminaires to the top of a pole, pole 1 can be secured within the pole base 2 by sliding a collet assembly on the pole and downwardly into a suitable opening or chamber within the pole base.

In commercial practice, the pole 1 may be tapered at the rate of .14 inch per foot of pole length with the smallest diameter at the top of the pole. The taper rate corresponds to approximately ⅛ of 1 degree slope on diametrical opposite pole portions. The present invention provides a firm, positive attachment of a luminaire to poles both with and without the taper.

The present invention provides a collet type attachment for rigidly mounting luminaires or the like upon a pole with the establishment of a large gripping surface and bearing area over which the clamping forces are uniformly distributed, circumferentially and axially. The luminaire is readily mounted or removed from the pole with a minimum amount of skill and equipment. Large luminaires with the resulting high windage and bending loads can be pole-top mounted while maintaining a pleasant appearance of the complete luminaire unit.

Various modes of carrying out the invention are contemplated as being within the scope of the following claims particularly pointing out and distinctly claiming the subject matter which is regarded as the invention.

We claim:

1. An attachment assembly for interconnecting a member to a pole for outdoor installation, which comprises a tubular attachment element adapted to be secured to the member and having an opening with inner tapered wall means expanding outwardly for telescoping over the end of the pole, a series of circumferentially spaced collet

segments having tapered outer surfaces tightly wedged in the opening and between the tubular element and the pole, said segments each including a reverse tapered section within the tapered outer surfaces, and locking means secured to the attachment element and bearing on the reverse tapered section to securely lock the collet segments in place.

2. The attachment assembly of claim 1 wherein said locking means includes set screws threadedly secured within tapped openings in the attachment element with the inner ends of the set screws bearing on said reverse tapered sections.

3. In a luminaire assembly, a vertical luminaire supporting tapered pole with the large end secured to an outdoor ground area to be illuminated, a luminaire having a lower base housing with an inwardly contracting conical opening terminating in a radial supporting flange resting on the upper end of the pole, a plurality of identical arcuate collet segments having an inner radius substantially corresponding to the top radius of the pole and slidably disposed within the conical opening, the outer surface of each collet being tapered to wedge between the pole and the base housing and having the uppermost taper increased to facilitate assembly into the conical opening and having a reverse slope section centrally of the lower portion of each segment, the frictional engagement of the collet segments with the pole and the base housing establishing a distributed bearing load, and locking means releasably secured to the base housing in alignment with the reverse slope section and bearing on the reverse slope section to rigidly lock the luminaire to the pole against severe vibration loads.

4. In a luminaire assembly, a vertical luminaire supporting tapered pole with the large end secured to an outdoor ground area to be illuminated, a luminaire having a lower base housing with an outwardly expanding frusto conical opening terminating in a radial supporting flange resting on the upper end of the pole, a plurality of arcuate collet segments having an inner radius substantially corresponding to the top radius of the pole and substantially encompassing the circumference of an upper portion of the pole, the outer surface of each collet being tapered with the collet segments wedged between the pole and the base housing and having the uppermost taper increased to facilitate assembly into the frusto concial opening, and an integral radial flange on the lowermost end of each collet segment being disposed immediately beneath the base housing for removing the wedged collet segments.

5. A pole-top mounted luminaire unit, comprising a lamp pole, a luminaire having a base telescopically disposed over the upper end of the lamp pole, said base having inner tapered walls defining an included angle of substantially thirteen degrees adjacent the lamp pole, and a series of circumferentially spaced collet segments, each of said segments having a substantial depth and circumferential width and having tapered outer surfaces defining an included angle of thirteen degrees, said segments being tightly wedged between the pole and the base to establish a compressive radial load over a substantial area of the pole.

6. In a luminaire assembly, a vertical tapered pole with the large end secured to an outdoor ground area to be illuminated; a luminaire having a lower base housing with a frusto-conical lower chamber having an outwardly tapered side wall having an inner radial supporting ledge resting on the upper end of the pole, the side wall of the chamber having a selected included angle, plurality of identical arcuate collet segments having an inner radius substantially corresponding to the top radius of the pole and slidably disposed in the conical chamber, the outer surface of each collet segment being tapered with an included angle corresponding to said selected angle to wedge between the pole and the base housing and having the uppermost end of an increased taper to facilitate

assembly into the conical opening, the frictional engagement of the collet segments with the pole and the base housing establishing a distributed bearing load, each of said segments having a reverse slope section centrally of the lower portion of each segment, the base housing having tapped openings aligned with the reverse slope section, a set screw threaded through each tapped opening and bearing on the reverse slope section to releasably lock the luminaire to the pole against severe vibration loads, an integral radial flange on the lowermost end of each collet segment for removing a wedged collet segment, and an endless coil spring encircling said collet segments to initially hold the segments on the pole while placing the base housing onto the top of the pole, said segments having aligned outer circumferential recesses to accommodate said coil spring.

7. A sub-assembly for attaching a luminaire having a base constructed to telescope with the top of a vertical pole, which comprises a form generally having a diameter corresponding to the top of the pole, a plurality of arcuate collet segments circumferentially spaced about the form, an encircling coil spring holding the collet segments on the form, said segments having aligned outer circumferential recesses accommodating said spring and outer tapered surfaces for wedging between the pole and the base, at least one arcuate shim disposed adjacent the pole face of each segment, and means releasably securing the shim to the collet segment to allow manual separation of the shim from the collet segment.

8. A collet segment for insertion between a pair of telescoped members one of which includes a radially movable locking member, comprising a body portion with a tapered wedging surface engaging the telescoped member which includes the locking member and having a reverse tapered section within the wedging surface for accommodating the locking member of the adjacent telescoped member.

9. In a luminaire asembly for outdoor lighting, a vertical luminaire supporting pole adapted to have one end attached to a ground support, a luminaire having a lower base housing including an internal tubular wall telescoped over the upper end of the supporting pole, said internal tubular wall tapering upwardly and radially inwardly in radially spaced relation to the pole, a plurality of collet segments having an inner radius substantially corresponding to the engaged pole and being wedged tightly between the pole and the tubular wall, the outer surface of each segment being continuously tapered in accordance with the taper of said tubular wall substantially coextensive therewith and having a small reverse taper section within the outer surface in the lower portion of the segment to uniformly distribute the load about the pole, and locking means releasably secured to the base housing in alignment with the reverse slope section and bearing on the reverse slope section to rigidly lock the luminaire to the pole against severe vibration load.

10. An outdoor lighting assembly for connection to the top of a tapered pole, which comprises a luminaire having a lower base housing provided with a bottom opening and inner tapered wall means expanding from a diameter less than the top of the pole outwardly to said bottom opening for telescoping over the end of the tapered pole, a series of circumferentially spaced collet segments each having a tapered outer surface tightly wedged in the opening and between the base housing and the pole, said segments each including a reversed tapered section within the tapered outer surface, and releasable locking means secured to the base housing and bearing on the reversed tapered section to securely lock the collet segments in place.

11. The attachment assembly of claim 10 wherein said locking means includes set screws threadedly secured within tapped openings in the base housing with the inner end of the set screw bearing on said reverse tapered sections.

12. An outdoor lighting assembly for connection to

the top of a tapered pole, which comprises a luminaire having a lower base housing provided with a bottom opening and inner tapered wall means expanding outwardly for telescoping over the end of the tapered pole, a series of circumferentially spaced collet segments each having a tapered outer surface tightly wedged in the opening between the base housing and the pole, said segments each including within the tapered outer surface a locking surface angularly disposed relative to the corresponding outer tapered surface, and locking means secured to the base housing in alignment with the locking surfaces and bearing on the aligned locking surface to securely lock the collet segments in place.

References Cited in the file of this patent

UNITED STATES PATENTS

1,946,629	Laughlin	Feb. 13, 1934
2,185,694	Noe	Jan. 2, 1940
2,321,028	Johnson	June 8, 1943
2,745,949	Borin	May 15, 1956
2,784,015	Swanson	Mar. 5, 1957
2,835,496	Hall	May 20, 1958
2,843,399	Arterbury et al.	July 15, 1958

FOREIGN PATENTS

558,343	Canada	June 3, 1958