US010128605B2

(12) **United States Patent**
Takeuchi

(10) **Patent No.: US 10,128,605 B2**
(45) **Date of Patent: Nov. 13, 2018**

(54) **CONNECTOR**

(71) Applicant: **Sumitomo Wiring Systems, Ltd.**, Yokkaichi, Mie (JP)

(72) Inventor: **Michiyo Takeuchi**, Mie (JP)

(73) Assignee: **SUMITOMO WIRING SYSTEMS, LTD.**, Yokkaichi, Mie (JP)

(*) Notice: Subject to any disclaimer, the term of this patent is extended or adjusted under 35 U.S.C. 154(b) by 0 days.

(21) Appl. No.: **15/646,436**

(22) Filed: **Jul. 11, 2017**

(65) **Prior Publication Data**

US 2018/0026390 A1 Jan. 25, 2018

(30) **Foreign Application Priority Data**

Jul. 19, 2016 (JP) 2016-141230

(51) **Int. Cl.**

H01R 31/08	(2006.01)
H01R 13/502	(2006.01)
H01R 24/20	(2011.01)
H01R 24/66	(2011.01)
H01R 13/52	(2006.01)
H01R 103/00	(2006.01)

(52) **U.S. Cl.**

CPC ***H01R 13/5025*** (2013.01); ***H01R 13/5202*** (2013.01); ***H01R 24/20*** (2013.01); ***H01R 24/66*** (2013.01); *H01R 2103/00* (2013.01)

(58) **Field of Classification Search**

CPC H01R 2103/00; H01R 24/66; H01R 24/20; H01R 13/5202

USPC 439/136, 607.21, 509, 512

See application file for complete search history.

(56) **References Cited**

U.S. PATENT DOCUMENTS

6,224,238	B1 *	5/2001	Chen	F21V 19/0005 362/654
8,579,655	B2 *	11/2013	Kawamura	H01R 13/6315 439/353
9,024,183	B2 *	5/2015	Sakakura	H01R 13/5202 174/50.5
9,397,459	B2 *	7/2016	Butcher	H01R 33/95
2012/0282789	A1 *	11/2012	Kawamura	H01R 13/6315 439/136

(Continued)

FOREIGN PATENT DOCUMENTS

JP 2012-248415 12/2012

Primary Examiner — Abdullah Riyami
Assistant Examiner — Nelson R Burgos-Guntin
(74) *Attorney, Agent, or Firm* — Gerald E. Hespos; Michael J. Porco; Matthew T. Hespos

(57) **ABSTRACT**

A connector (**10**) to be mounted into an attaching member (**60**) provided detachably to a case (**80**) of a device accommodating a waiting connector (**90**) to face the waiting connector (**90**) and to be connected to the waiting connector (**90**) includes a housing (**20**) configured to accommodate a terminal (**50**) and a movable member (**40**) forming a wire accommodating portion (**41**) together with the connector housing (**20**). The wire accommodating portion (**41**) is configured to accommodate a wire W connected to the terminal (**50**), and including a held portion (**45**) to be held movably within a plane perpendicular to a connecting direction to the waiting connector (**90**) with respect to a holding portion (**70**) provided in the attaching member (**60**), and a coupling (**37**, **39**, **43**) configured to couple the housing (**20**) and the movable member (**40**).

3 Claims, 13 Drawing Sheets

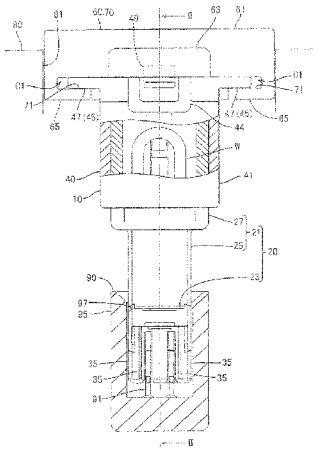

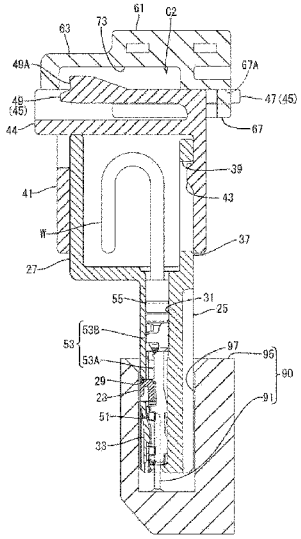

(56) **References Cited**

U.S. PATENT DOCUMENTS

2014/0148034 A1* 5/2014 Kashiwada H01R 13/512
439/345
2014/0148045 A1* 5/2014 Kashiwada H01R 13/6592
439/485

* cited by examiner

FIG. 1

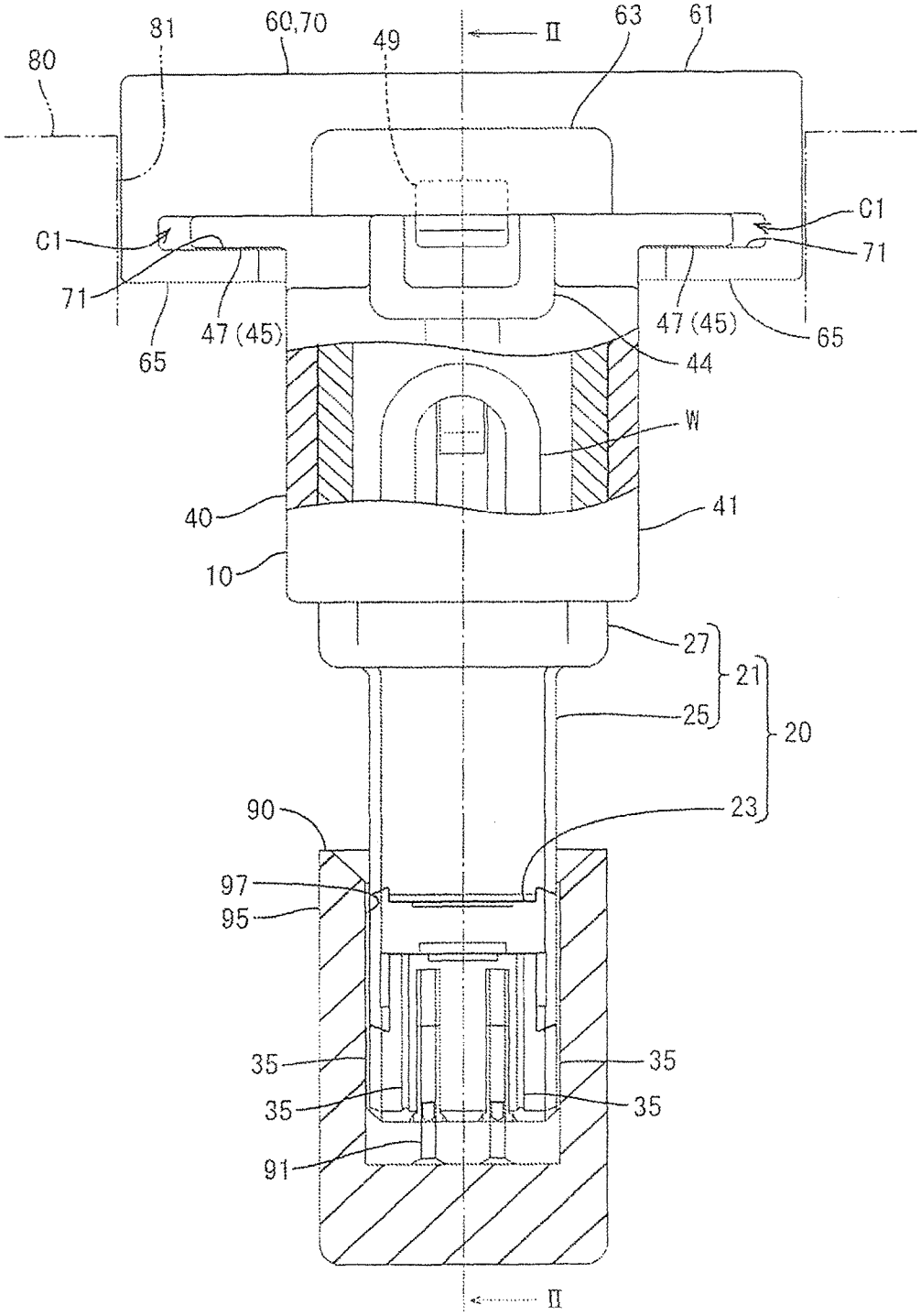
81
60,70
49
II
63
61
80
C1
C1
71
71
47 (45)
47 (45)
65
65
44
W
40
41
10
27
21
25
20
23
90
97
95
35
35
35
35
91
II

FIG. 2

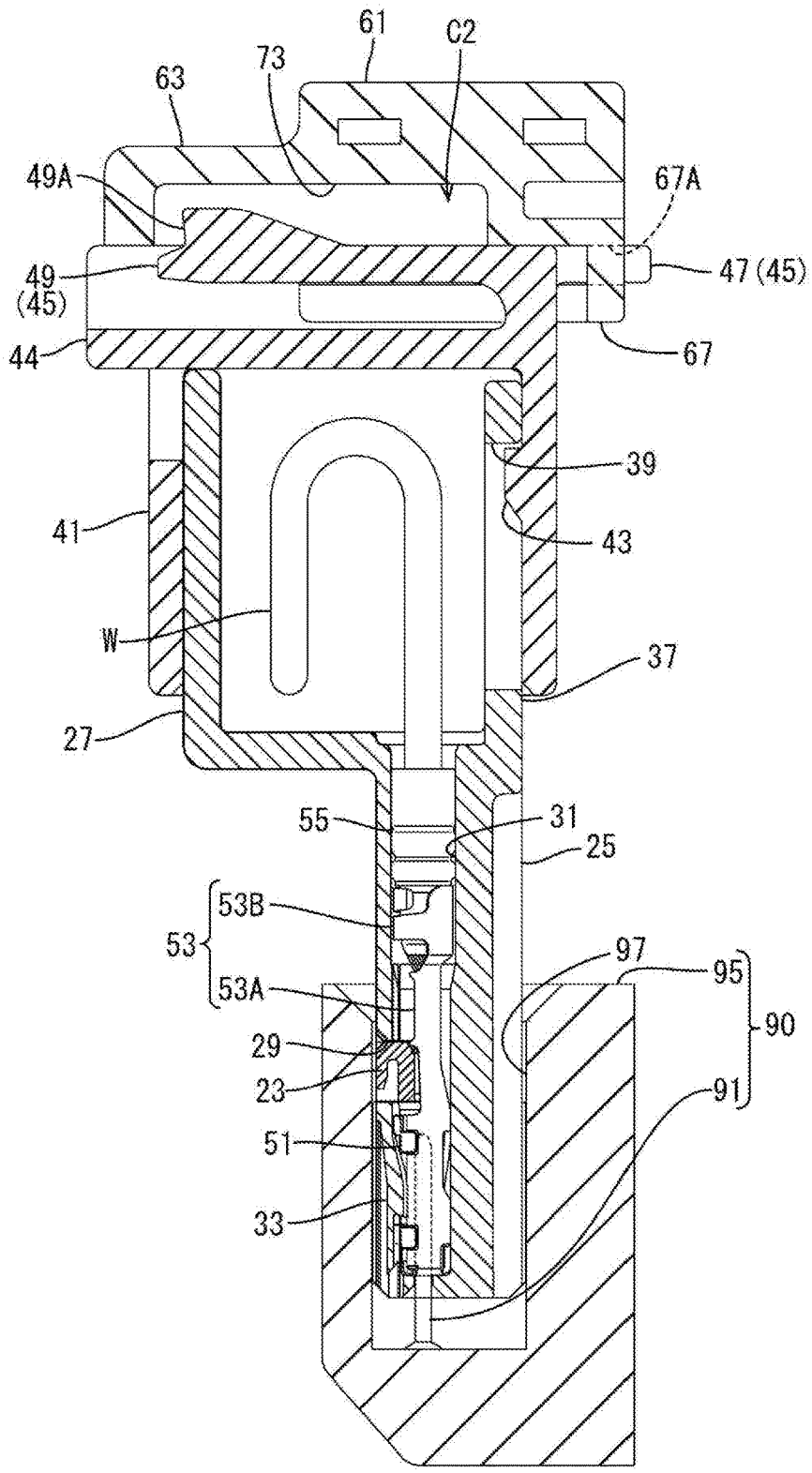
61
C2
73
63
49A
67A
49
(45)
47 (45)
44
67
39
41
43
W
37
27
55
31
25
53B
53
53A
97
95
90
29
23
91
51
33

FIG. 3

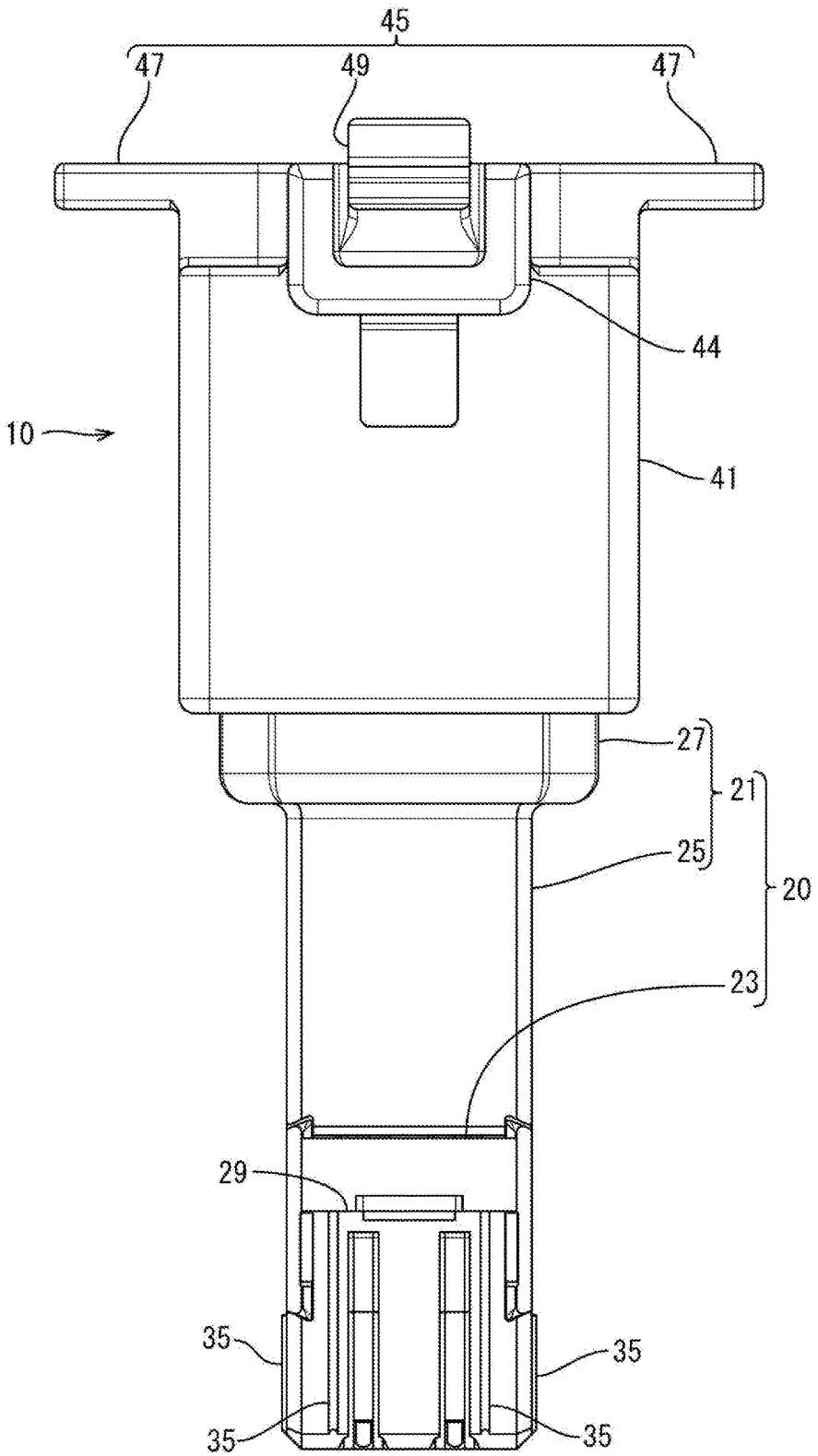

FIG. 4

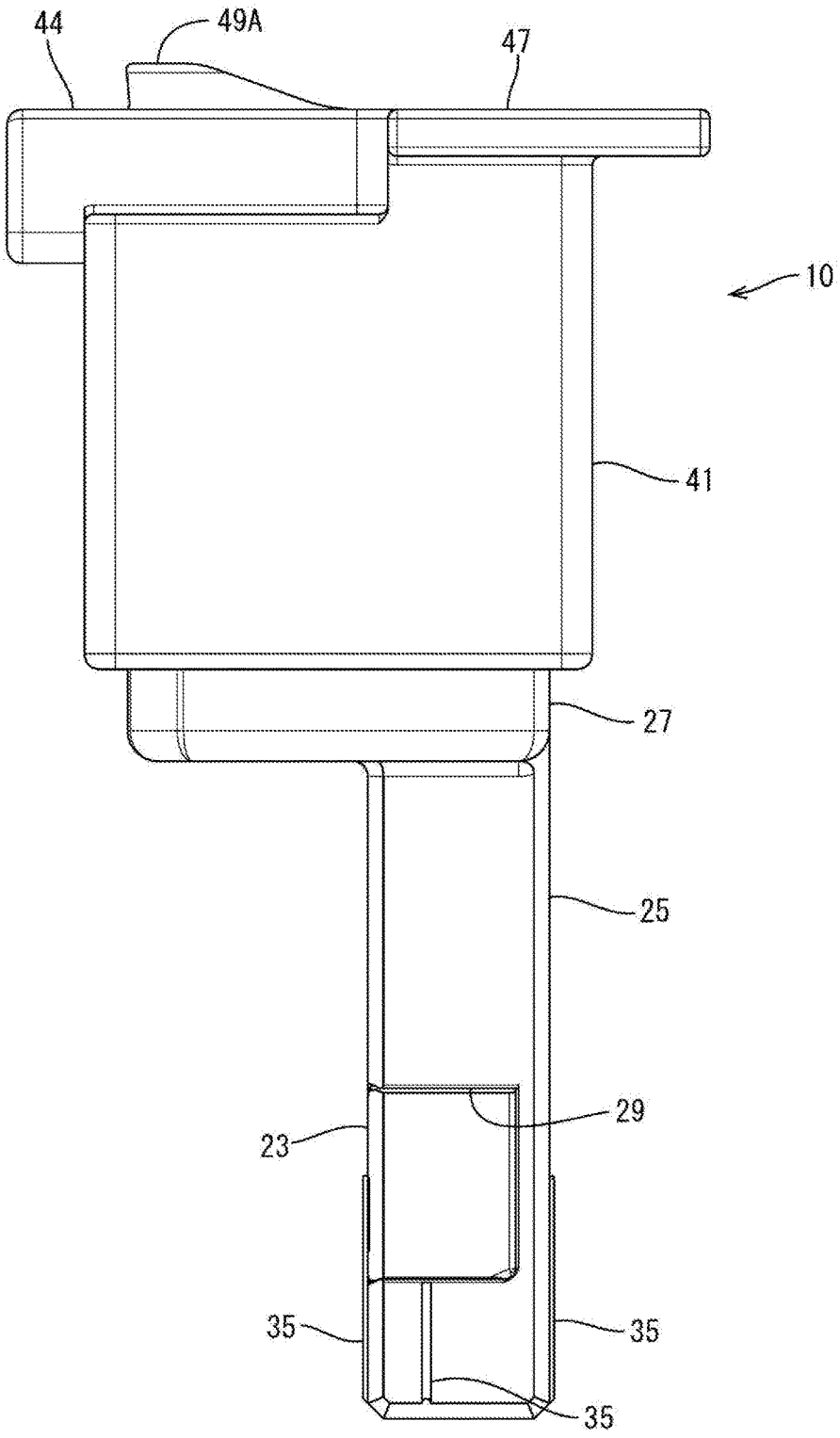

FIG. 5

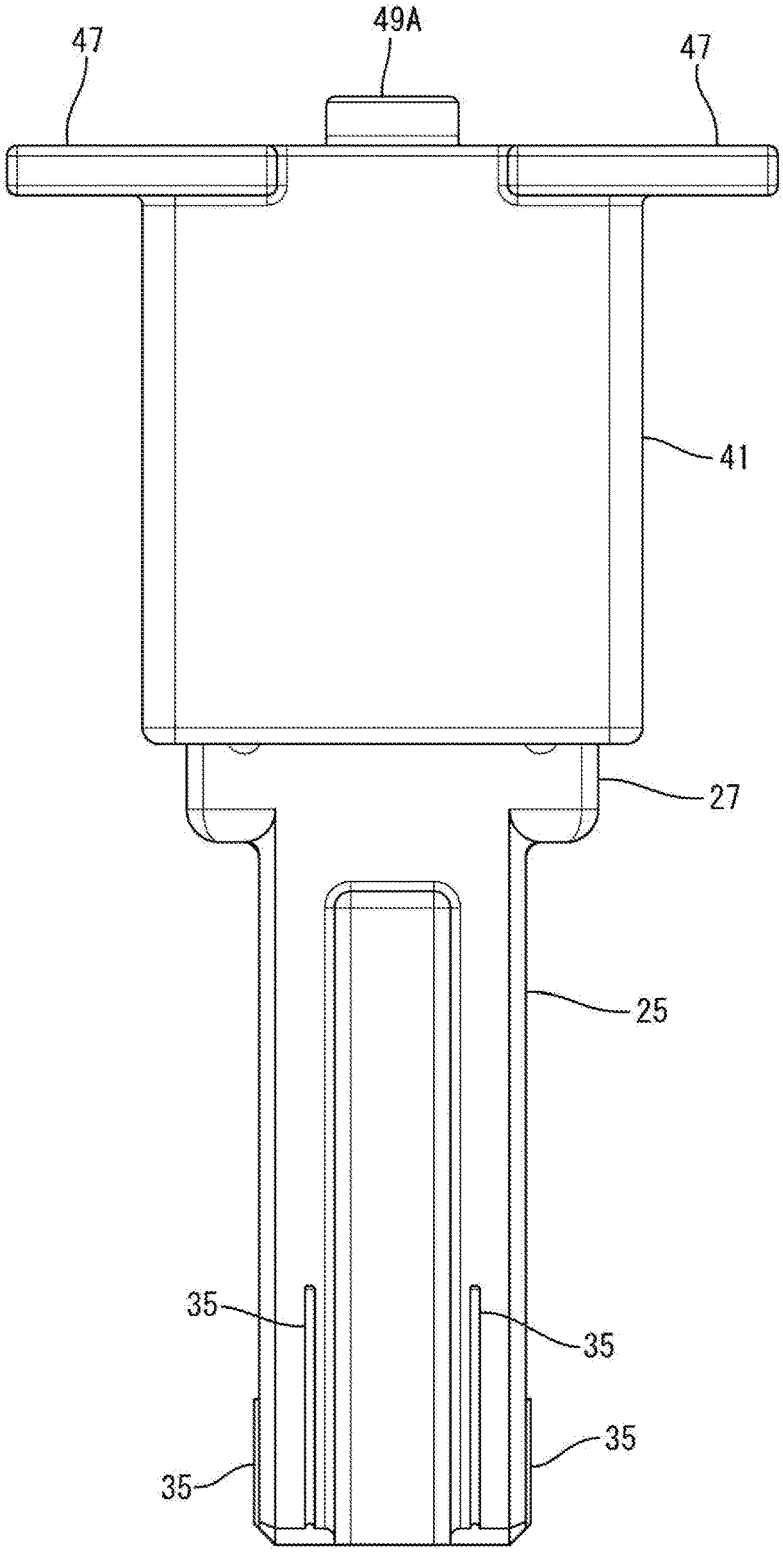

FIG. 6

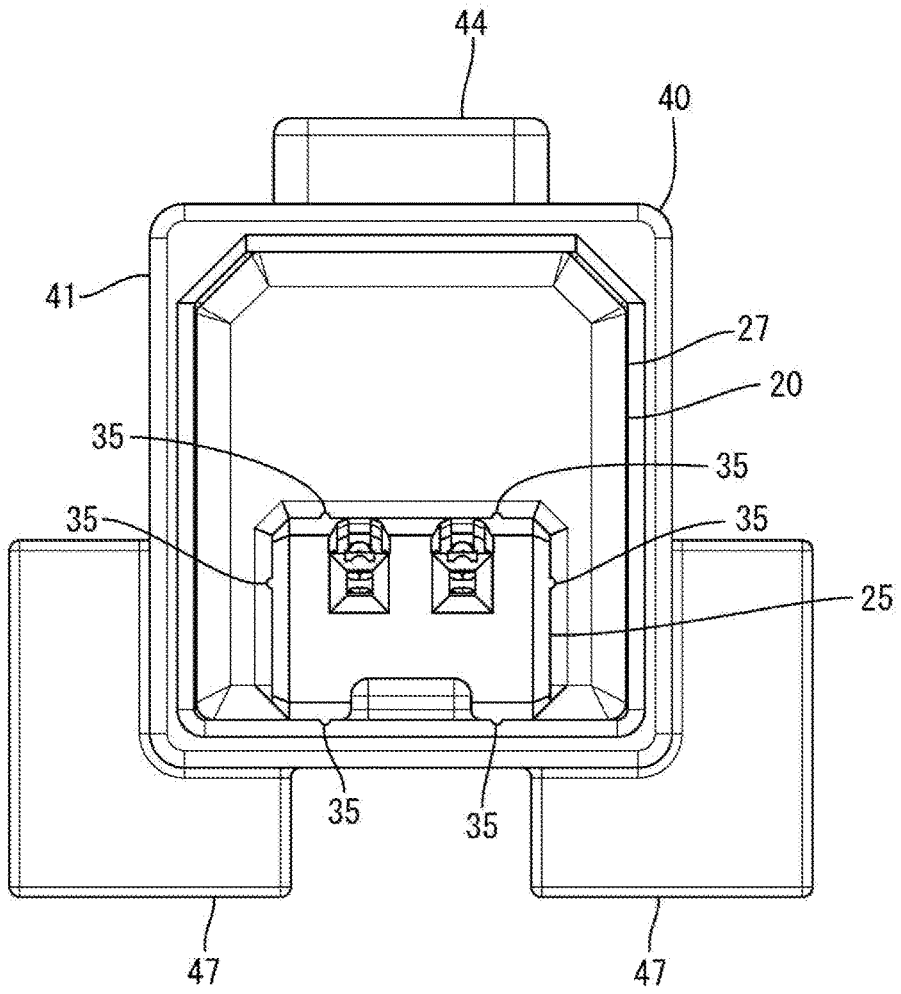

FIG. 7

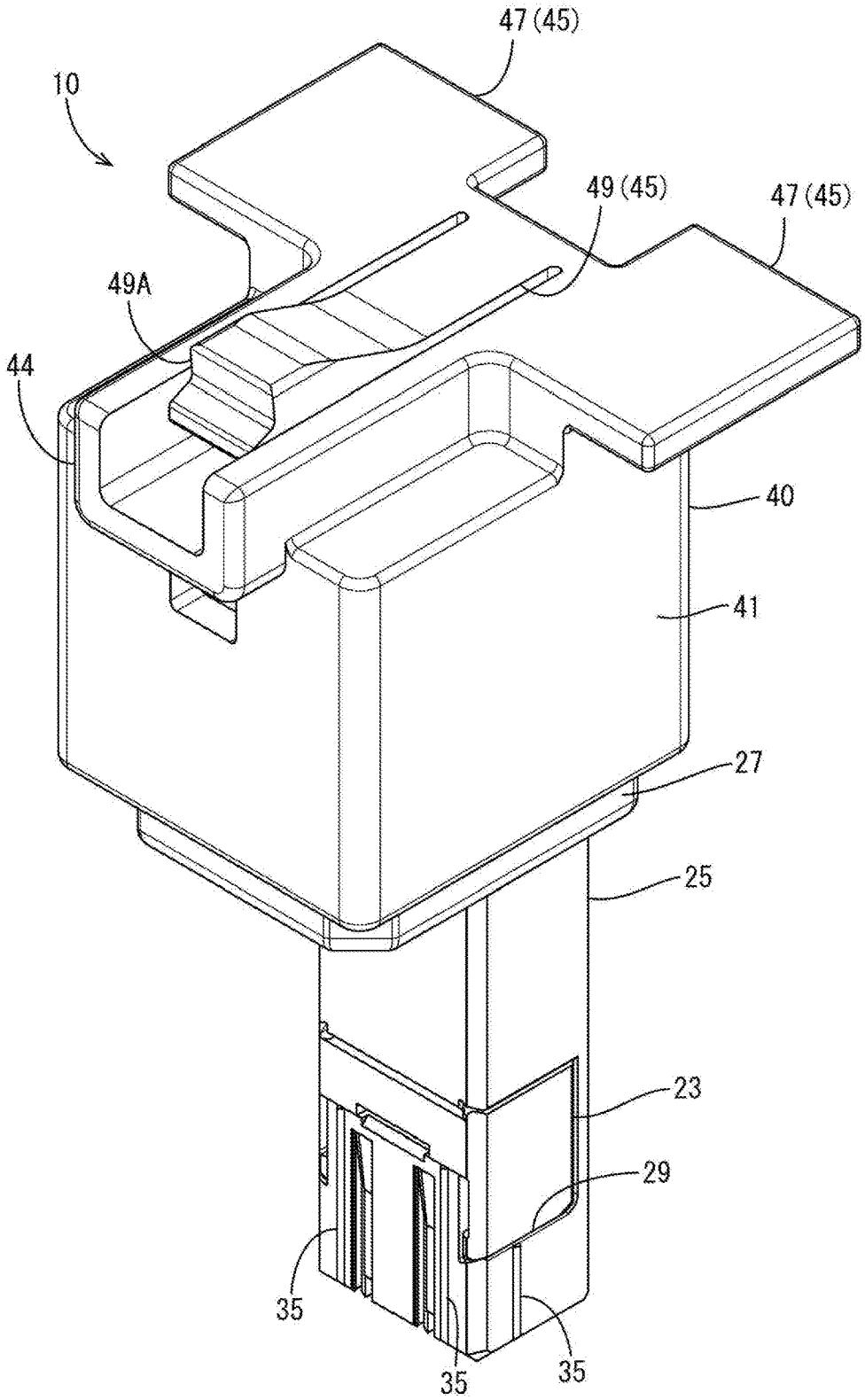

FIG. 8

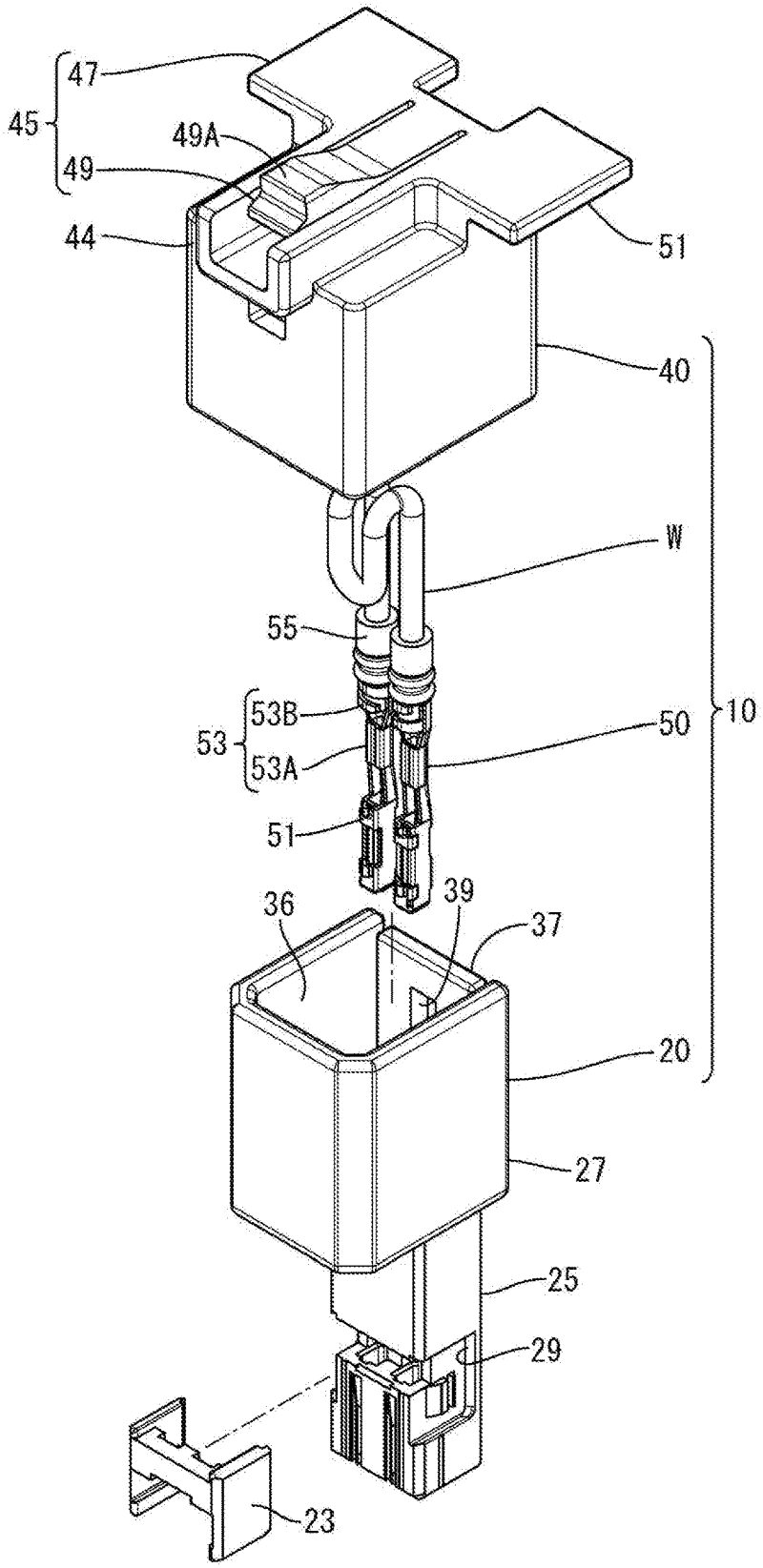

FIG. 9

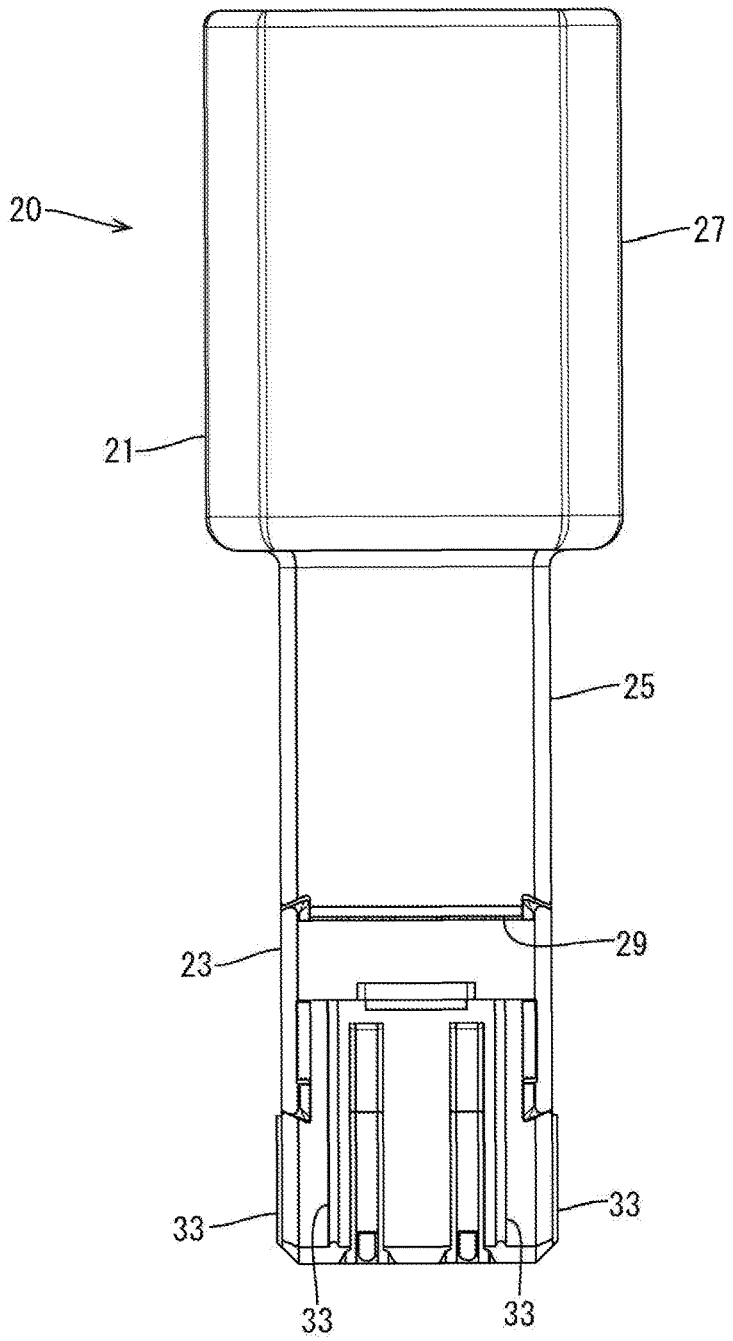

FIG. 10

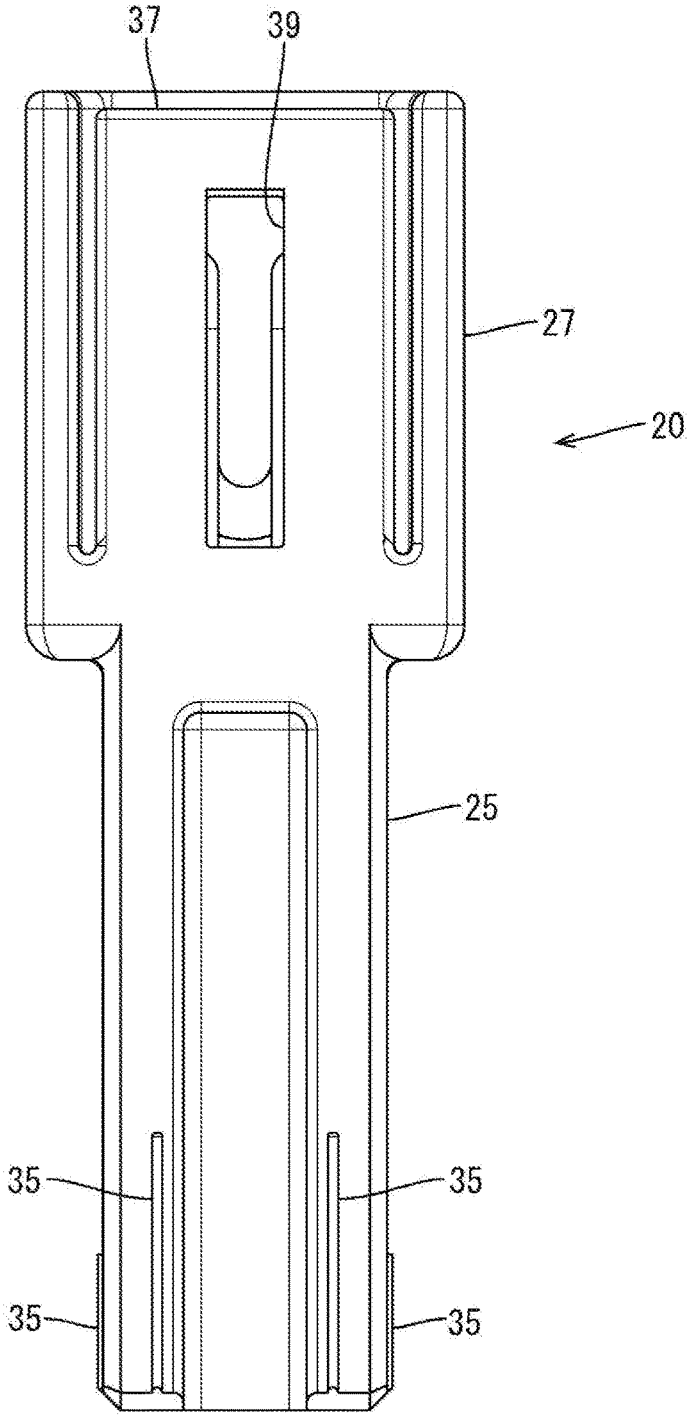

FIG. 11

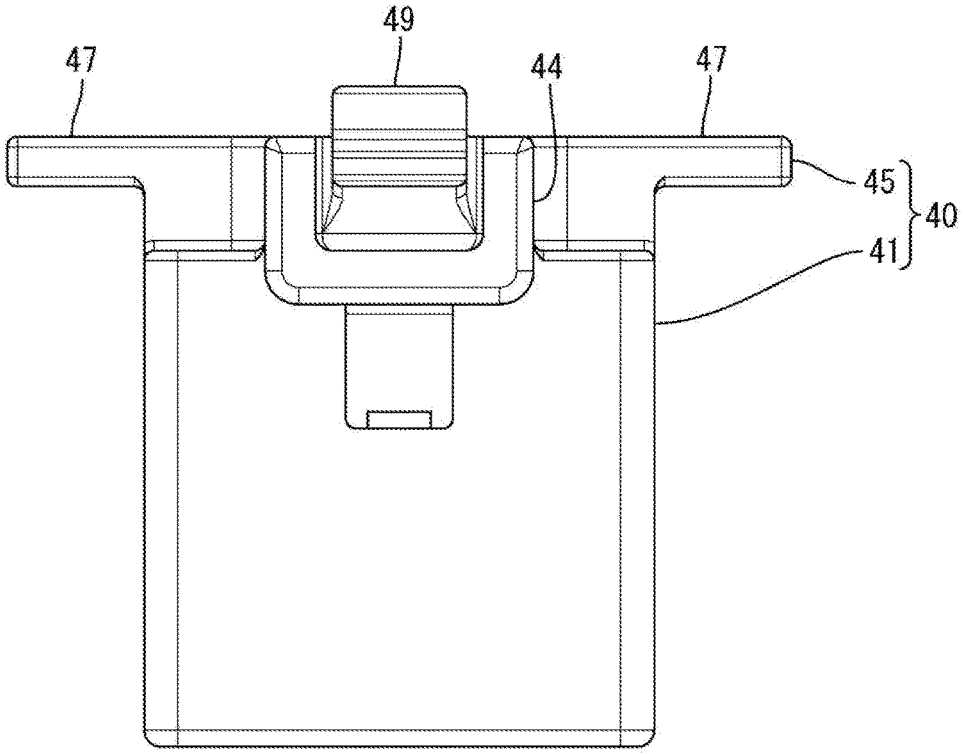

FIG. 12

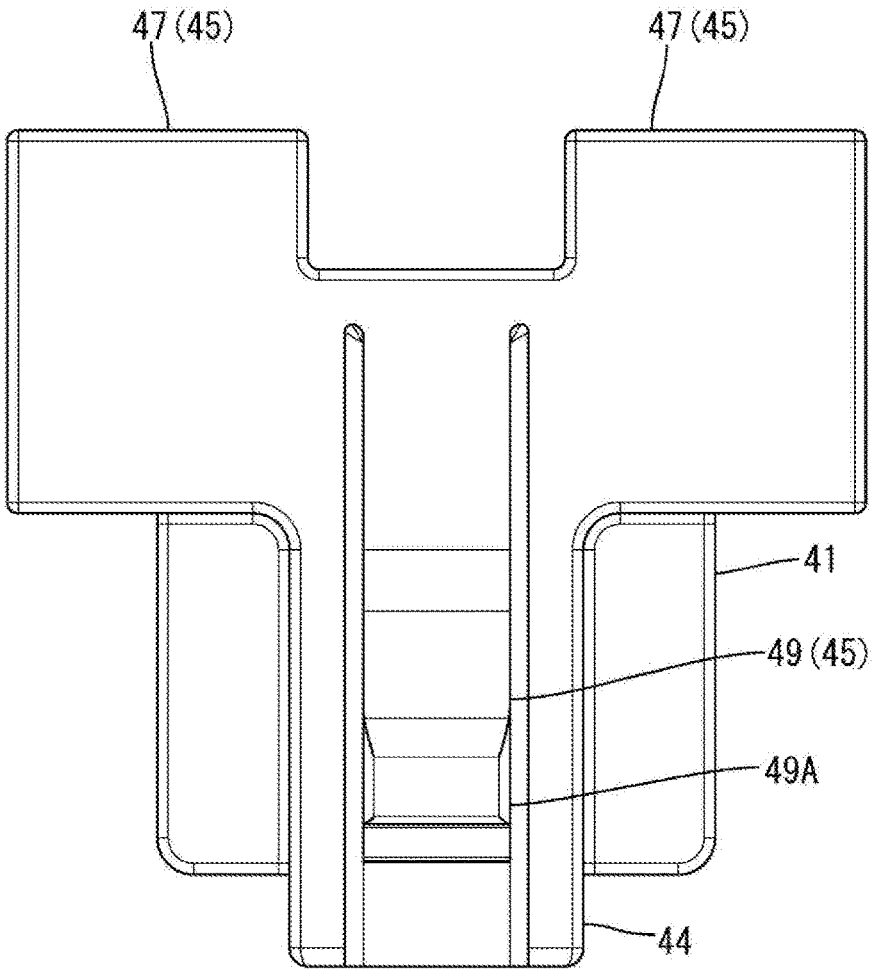

FIG. 13

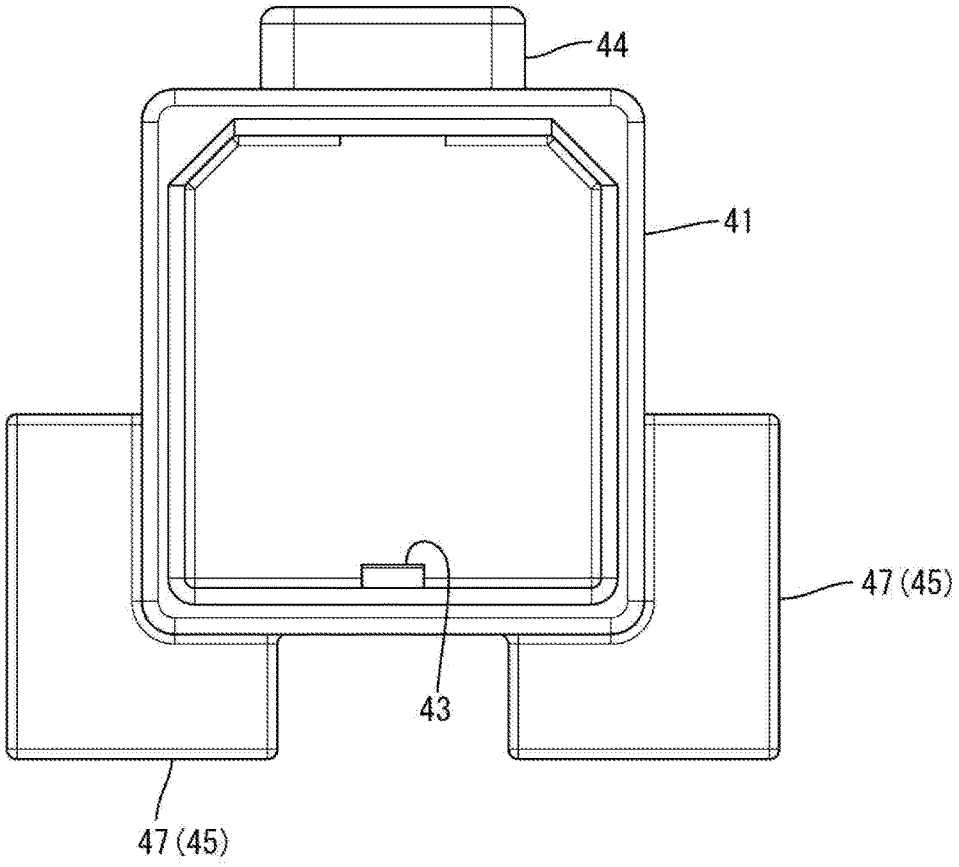

CONNECTOR

BACKGROUND

1. Field of the Invention

This specification relates to a connector.

2. Description of the Related Art

Some device cases have an opening so that a terminal block and a busbar can be fastened in the case. A service cover is attached to the case to close the after a bolt fastening operation is completed so that water, dust and the like do not intrude into the interior of a device through this opening. An interlock circuit may be provided as a safety measure to shut off an electrical circuit in the device after removing the service cover from the case. Specifically, the interlock circuit is configured by connecting a waiting connector provided in the device and an interlock connector attached to the service cover. Power can be applied to the electrical circuit in the device in this connected state. On the other hand, the interlock circuit is shut off and the electrical circuit in the device also is shut off when the service cover is removed from the case and the interlock connector is separated from the waiting connector.

Japanese Unexamined Patent Publication No. 2012-248415 discloses such a service cover mounted with the interlock connector of the interlock circuit. The interlock connector is attached to a cover movably in a direction perpendicular to a connecting direction to absorb a positional displacement between the connectors.

However, a terminal used in the interlock connector of Japanese Unexamined Patent Publication No. 2012-248415 is a dedicated shorting terminal in which two pin-like terminals are coupled. This dedicated terminal needs to be fabricated for each interlock connector and leads to a cost increase. Accordingly, it is thought to use general-purpose terminals and connect those terminals by a wire. However, a connector housing that is movable with respect to a service cover while the terminals and the wires are accommodated in the connector housing must have a long length, thereby causing a problem that a molding failure easily occurs in the connector housing.

SUMMARY

The invention relates to a connector to be mounted in an attaching member that is attachable to a case of a device. The case accommodates a waiting connector, and the connector faces the waiting connector so that the connector can be connected to the waiting connector. The connector includes a housing configured to accommodate a terminal and a movable member that cooperates with the housing to form a wire accommodating portion. The wire accommodating portion is configured to accommodate a wire connected to the terminal, and includes a held portion that is held movably within a plane perpendicular to a connecting direction to the waiting connector with respect to a holding portion provided in the attaching member. A coupling is configured to couple the connector housing and the movable member.

In this configuration, the housing and the movable member can be separate members used by being coupled. Thus, both the housing and the movable member are reduced in size as compared to the case where the housing is integral with a moving structure with respect to the attaching member. Therefore, a molding failure is avoided.

The housing may have an opening on a side opposite to the side that connects to the waiting connector, and the terminal may be insertable into the opening. The held portion may comprise an engaging piece and the holding portion may comprise an engaging groove that is engaged by the engaging piece. The engaging groove may be on an end part of the movable member on the side of the attaching member. The engaging piece may project in a predetermined direction within a plane perpendicular to the connecting direction to the waiting connector. The engaging groove may extend in a direction intersecting a projecting direction of the engaging piece within the plane perpendicular to the connecting direction to the waiting connector. A clearance may be provided between the engaging piece and an inner wall of the engaging groove to enable the connector to move in an extending direction of the engaging groove. The held portion may comprise a resilient locking piece on the movable member and the holding portion may comprise an accommodating portion to which the resilient locking piece is locked. The resilient locking piece may project toward the attaching member within the plane perpendicular to the connecting direction to the waiting connector and may extend in the projecting direction of the engaging piece. A clearance for moving the connector in an extending direction of the resilient locking piece may be provided between the resilient locking piece and the accommodating portion, and the resilient locking piece may be arranged above the opening.

In this configuration, a clearance exists between the engaging piece and the inner wall of the engaging groove and a clearance exists between the resilient locking piece and the inner wall of the accommodating portion. Thus, the connector is movable relative to the attaching member within dimensions of these clearances. Further, the resilient locking piece extends in the projecting direction of the engaging piece. Thus, the resilient locking piece can be locked and retained in the accommodating portion merely by pushing the movable member into the attaching member with the engaging piece engaged with the engaging groove. Further, the resilient locking piece is above the opening that receives the terminal so that miniaturization is possible.

A press-fit rib may be provided on an outer surface of the housing and may be pressed into contact with an inner surface of the waiting housing and squeezed when connecting the housing to the waiting housing, thereby fixing the housing and the waiting housing together. A rubber plug may be mounted on the wire to be held in close contact with an outer peripheral surface of the wire and a cavity of the housing when the terminal is accommodated in the cavity.

The connector is held movably with respect to the attaching member, the connector and the waiting connector may move due to vibration. Accordingly, if the housing is connected to the waiting connector by this configuration, the press-fit rib is pressed into contact with the waiting connector to be squeezed, and the housing and the waiting housing are fixed integrally. Further, the terminal may relatively move due to a clearance formed between the cavity and the wire. However, relative movement of the wire with respect to the cavity can be suppressed by holding the rubber plug in close contact so that a relative movement of the terminal can be suppressed.

Accordingly, it is possible to suppress a molding failure.

BRIEF DESCRIPTION OF THE DRAWINGS

FIG. **1** is a front view partly in section showing a state where a connector according to an embodiment and a waiting connector are connected.

FIG. **2** is a section along II-II in FIG. **1**.

FIG. **3** is a front view of the connector.

FIG. **4** is a side view of the connector.

FIG. **5** is a back view of the connector.

FIG. **6** is a bottom view of the connector.

FIG. **7** is a perspective view of the connector.

FIG. **8** is an exploded perspective view of the connector.

FIG. **9** is a front view of a housing having female terminals therein.

FIG. **10** is a back view of the housing having the female terminals therein.

FIG. **11** is a front view of a movable member.

FIG. **12** is a plan view of the movable member.

FIG. **13** is a bottom view of the movable member.

DETAILED DESCRIPTION

An embodiment is described with reference to FIGS. **1** to **13**. This embodiment has a connector **10** assembled with an attaching member **60** to be attached to a case **80** of an electrical device in a vehicle, as shown in FIGS. **1** and **2**. In the following description, an upward direction in FIGS. **1** and **2** (separating direction of the connector **10**) is referred to as an upward direction and a downward direction in FIGS. **1** and **2** (connecting direction of the connector **10**) is referred to as a downward direction concerning a vertical direction. Further, a front-rear direction is based on a lateral direction in FIG. **2** and left and right sides in FIG. **2** are referred to as the front and rear.

An opening **81** of the case **80** is provided as a work hole into which a tool for bolt fastening or the like is inserted to fasten together unillustrated conductive members connected to the electrical device. The attaching member **60** is attached removably to the case **80** via an unillustrated cover and the opening **81** is covered by the cover.

Further, as shown in FIGS. **1** and **2**, an interlock circuit is provided between the cover that covers the opening **81** and the electrical device in the case **80** for turning on and off the supply of power to the electrical device as the cover is attached and detached. This interlock circuit includes the connector **10** and a waiting connector **90** fixed in the case **80** to face both the opening **81** and the attaching member **60** arranged in the opening **81**.

The waiting connector **90** fixed in the case **80** includes tab-like male terminals **91** and a waiting housing **95**, as shown in FIGS. **1** and **2**. The waiting housing **95** includes a receptacle **97** to be fit externally to a later-described connector housing **20** of the connector **10**. An upper end part of the receptacle **97** is flared to have larger inner dimensions toward the top to guide the housing **20** into the receptacle **97**.

As shown in FIGS. **2** and **8**, the connector **10** includes the housing **20** made of synthetic resin, a movable member **40** coupled to the housing **20**, two female terminals **50** in the housing **20** and a wire W linking between the two female terminals **50**.

As shown in FIGS. **8** and **9**, the housing **20** is long vertically and includes a housing body **21** and a retainer **23** configured to lock the female terminals **50**. The housing body **21** includes a fitting **25** configured to accommodate the female terminals **50** and to be fit into the waiting housing **95**, and a lower wire accommodating portion **27** configured to accommodate the wires W connected to the female terminals **50**.

As shown in FIGS. **2** and **8**, the fitting **25** is a rectangular column with chamfered corners. Two laterally adjacent cavities **31** penetrate the fitting **25** in the vertical direction and can accommodate the female terminals **50**. A locking lance **33** is provided in the cavity **31** and achieves primary locking of the female terminal **50** that has been inserted to a proper position from above the cavity **31**. Further, a mounting hole **29** is provided in the fitting **25** at a position above the locking lances **33** and the retainer **23** can be mounted therein. The retainer **23** achieves secondary locking of the female terminals **50** that have been locked primarily by the locking lances **33**.

Further, as shown in FIGS. **6** and **7**, press-fit ribs **35** are provided on the outer surface of the fitting **25** and are squeezed by being pressed into contact with the inner surface of the receptacle **97**. The press-fit ribs **35** are provided on each surface of the fitting **25** and have a semicircular shape in a bottom view. Two press-fit ribs **35** are provided on each of the front and rear surfaces of the fitting **25**, and one press-fit rib **35** is provided on each side surface. Outer dimensions of the fitting **25** in a part where the press-fit ribs **35** project are larger than inner dimensions of the receptacle **97**. The press-fit ribs **35** are provided from a lower end position of the fitting **25** to a position reaching the mounting hole **29** (on the rear surface, to the same position as on the front surface) and provided on the outer periphery at a position where the male terminals **91** and the female terminals **50** are connected.

On the other hand, as shown in FIGS. **8** and **10**, the lower wire accommodating portion **27** is a hollow box with an opening **36** that opens up in a direction away from the waiting connector **90**. The female terminals **50** and the wires W are insertable through the opening **36** and into the housing **20**. Further, the lower wire accommodating portion **27** is wider than the fitting **25**, the rear end thereof is located at the same position as that of the fitting **25**, but the lower wire accommodating portion **27** projects more forward (left) than the fitting **25**. An accommodation space for the wires W is provided in the lower wire accommodating portion **27** and communicates with the cavities **31**.

A coupling wall **37** is at the rear of the lower wire accommodating portion **27** and has cuts at opposite widthwise sides so that the coupling wall **37** is resiliently deformable in the front-rear direction. A locking hole **39** penetrates through a widthwise central part of the coupling wall **37** in a plate thickness direction and can receive a locking projection **43** of the movable member **40** to be described later. The locking hole **39** extends up with an equal width from a lower end position of the coupling wall **37** (lower ends of the cuts) and has a rectangular shape in a back view.

As shown in FIGS. **8** and **11**, the movable member **40** is mounted onto the connector housing **20** from above. The movable member **40** is made of synthetic resin and includes an upper wire accommodating portion **41** to be fit externally to the lower wire accommodating portion **27** and has a held portion **45** at an upper end. The upper wire accommodating portion **41** is a downwardly open rectangular box that covers most of the lower wire accommodating portion **27**. More specifically, a lower end of the upper wire accommodating portion **41** reaches the lower end of the coupling wall **37**, and the inner shape of the upper wire accommodating portion **41** is the same as the outer shape of the lower wire accommodating portion **27**. The lower and upper wire accommodating portions **27**, **41** can be assembled to form a wire accommodating portion for accommodating the wire W. The locking projection **43** ("coupling portion") projects in (forward) from the rear wall of the upper wire accommodating portion **41**, as shown in FIG. **2** and can be locked to the locking hole **39** to assemble the movable member **40** with the housing **20**.

As shown in FIGS. **8** and **12**, the held portion **45** has two engaging pieces **47** and a resilient lock **49**. The engaging

pieces **47** are rectangular plates at an upper part of the movable member **40** and project rearward and out in the width direction of the movable member **40** in a plane normal to the connecting direction of the connector **10**. The resilient lock **49** extends in an extending direction of the engaging pieces **47** (front-rear direction) within the plane perpendicular to the connecting direction of the connector **10** and is vertically displaceable. The resilient lock **49** is at a substantially central position in the width direction of the movable member **40** and is cantilevered from a part between the engaging pieces **47**. The resilient lock **49** is above the opening **36**. A protrusion **49**A is at a front extending end part of the resilient lock **49** and projects up toward the attaching member **60** for locking an edge of a hole of an accommodating portion **73** of the attaching member **60** to be described later. Further, the resilient lock **49** is accommodated in a box-shaped resilient locking piece accommodating portion **44** that opens up and forward. A lower end of the resilient locking piece accommodating portion **44** is slightly in the upper wire accommodating portion **41**, whereas an upper end position of the resilient locking piece accommodating portion **44** is flush with the engaging pieces **47**. Further, the resilient locking piece accommodating portion **44** projects more forward than the upper wire accommodating portion **41**.

As shown in FIGS. **1** and **2**, the attaching member **60** is a holding portion **70** with an engaging groove **71** to be engaged with the engaging pieces **47** and the accommodating portion **73** to which the resilient locking piece **49** is to be locked. The attaching member **60** includes a block-shaped attaching member body **61** and a projecting portion **63** for forming the accommodating portion **73**. The attaching member body **61** is smaller in the front-rear direction than the connector **10** and is at a position displaced toward the rear end of the connector **10**. Further, the projecting portion **63** projects forward from a widthwise central position of the attaching member body **61**, and the accommodating portion **75** is provided inside.

Holding pieces **65** project down from both widthwise ends of the attaching member body **61** by a thickness of the engaging pieces **47** and then extend in to define L-shapes. Further, the holding pieces **65** are provided over the entire length of the attaching member body **61** in the front-rear direction. The engaging groove **71** is enclosed by the lower surface of the attaching member body **61** and the upper surfaces of the holding pieces **65**. The engaging groove **71** extends in the front-rear direction, which is a direction intersecting a projecting direction of the engaging pieces **47**. More specifically, the engaging groove **71** extends in the front-rear direction over the entire length of the attaching member body **61** and has an open front end, whereas a rear stop wall **67** is provided on the rear end. A hole **67**A in the rear stop wall **67** communicates with the engaging groove **71**, and outer hole edges are flush with inner surfaces on widthwise outer sides of the engaging groove **71**.

As shown in FIGS. **1** and **2**, the accommodating portion **73** accommodates the protrusion **49**A of the resilient lock **49**. The accommodating portion **73** is a substantially rectangular upward recess on lower surfaces of the projecting portion **63** and the attaching member body portion **61**. The accommodating portion **73** is at a substantially middle position between the holding pieces **65** (engaging groove **71**) in the width direction. The movable member **40** is stopped in front by locking the protrusion **49**A of the resilient lock **49** to a front hole of the accommodating portion **73**.

As shown in FIGS. **1** and **2**, the engaging pieces **47** are fit in the engaging groove **71** with clearances C**1** in the width direction between the engaging pieces **47** and the inner wall of the engaging groove **71**, the edge of the hole **67**A of the rear stop wall **67**. Further, clearances also are provided in the width direction between the resilient lock **49** and the inner wall of the accommodating portion **73** so as not to obstruct movements of the engaging pieces **47** in the width direction in the clearances C**1**. Further, the holding pieces **65** hold lower sides of the engaging pieces **47** so that the movable member **40** will not come off the attaching member **60**.

As shown in FIGS. **1** and **2**, the resilient locking piece **49** is accommodated in the accommodating portion **73** with a clearance C**2** formed in the front-rear direction between the protrusion **49**A and the inner wall of the accommodating portion **73**. Further, the engaging pieces **47** are movable rearward until the movable member **40** contacts the rear stop wall **67** and the engaging groove **71** is open forward. Thus, the engaging pieces **47** do not obstruct a movement of the protrusion **49**A of the resilient lock **49** in the front-rear direction in the clearance C**2**. Note that the engaging pieces **47** have a length in the front-rear direction sufficient to fit into the engaging groove **71** even if the resilient locking piece **49** moves to a foremost side.

As described above, the movable member **40** is held movable within a plane (left, right, forward and downward directions) perpendicular to the connecting direction with the engaging pieces **47** and the resilient locking piece **49** serving as the held portion **45** held with the clearances C**1**, C**2** in the engaging groove **71** and the accommodating portion **73** serving as the holding portion **70**. That is, the connector **10** is held in the attaching member **60** movably within the plane perpendicular to the connecting direction in the clearances C**1** in the width direction and the clearance C**2** in the front-rear direction.

As shown in FIGS. **2** and **8**, the female terminal **50** includes a connecting portion **51** connectable to the male terminal **91** and a barrel **53** integral with the connecting portion **51** above the connecting portion **51**. The connecting portion **51** is a rectangular tube that opens up and down. The male terminal **91** is inserted from below and contacts a resilient contact piece in the connecting portion **51** so that the female terminal **50** and the male terminal **91** are connected electrically.

The barrel **53** includes a wire barrel **53**A to be crimped to an exposed core of the wire W at an end of the wire W and an insulation barrel **53**B to be crimped to an insulation coating of the wire W. A rubber plug **55** is mounted on the wire W and the insulation barrel **53** is crimped to this rubber plug **55** together with an insulation coating of the wire W. The rubber plug **55** is accommodated into the cavity **31**, thereby being held in close contact with the outer peripheral surface of the wire W and the inner surface of the cavity **31**.

The assembling of the connector **10** is described with reference to FIGS. **2** and **8**. In assembling the connector **10**, the female terminals **50** connected by one wire W are inserted into the respective cavities **31** through the opening **36** of the lower wire accommodating portion **27**. When being inserted to a proper position, each female terminal **50** is locked primarily locked by the locking lance **33**. The retainer **23** is mounted when the female terminals **50** are accommodated at the proper positions in the cavities **31** and secondarily locks the female terminals **50**.

With the female terminals **50** locked at the proper positions, the wire W is folded forward and accommodated into the lower wire accommodating portion **27**. Then, with the wire W accommodated in the lower wire accommodating portion **27**, the movable member **40** is mounted. Specifically, the movable member **40** is mounted from above the housing

body **21** and the upper wire accommodating portion **41** is fit externally to the lower wire accommodating portion **27**. At this time, the coupling wall **37** contacts the locking projection **43** in the upper wire accommodating portion **41** and is deflected and deformed forward. When the locking projection **43** reaches the locking hole **39**, the coupling wall **37** returns and the locking projection **43** is locked to the edge of the locking hole **39** to lock the movable member **40** to the housing **20**. Then, the upper wire accommodating portion **41** covers the coupling wall **37** to prevent the coupling wall **37** from being inadvertently deflected and unlocked.

The connector **10** is attached to the attaching member **60** after the movable member **40** is assembled. As shown in FIGS. **1** and **2**, the engaging pieces **47** of the movable member **40** are inserted into and engaged with the engaging groove **71** of the attaching member **60** from the front to assemble the connector **10** with the attaching member **60**. At this time, the resilient locking piece **49** is deflected and deformed down and the engaging pieces **47** reach a proper position in the engaging groove **71**, the protrusion **49**A of the resilient locking piece **49** of the movable member **40** is accommodated into the accommodating portion **73** and the connector **10** is retained so as not to be detached from the attaching member **60**. As just described, the resilient locking piece **49** extends in the projecting direction (front-rear direction) of the engaging pieces **47**. Thus, the resilient locking piece **49** can be locked and retained in the accommodating portion **73** only by pushing the movable member **40** into the attaching member **60** with the engaging pieces **47** engaged with the engaging groove **71**. In this way, the connector **10** is held movably in the forward, rearward, leftward and rightward directions with respect to the attaching member **60**.

The connection of the connector **10** and the waiting connector **90** is described with reference to FIGS. **1** and **2**. In mounting the attaching member **60** and the cover into the opening **81** of the case **80**, the connector **10** is inserted into the opening **81** and arranged to face the waiting connector **90**. The cover then is mounted to close the opening **81** so that the connectors **10**, **90** are connected, and the attaching member **60** is fixed to the case **80** via the cover.

Here, it is assumed that axial centers of the connector **10** and the waiting connector **90** are displaced slightly when the attaching member **60** is attached to the case **80**. In this case, the connector **10** is movable relative to the attaching member **60** in the forward, rearward, leftward and rightward directions (directions perpendicular to the connecting direction) by the clearances C**1**, C**2**. Thus, the fitting **25** moves along the tapered surface of the receptacle **97** and the fitting **25** of the connector **10** is centered and reliably fit into the receptacle **97** of the waiting connector **90**. Further, when the connector housing **20** and the waiting housing **95** are connected, the male terminals **91** contact the female terminals **50** in the connector housing **20** to configure the interlock circuit.

As just described, the connector **10** is held movably in the attaching member **60**. Thus, a positional displacement with respect to the waiting connector **90** can be corrected. On the other hand, if the vibration of the vehicle is transmitted to the connector **10** after the waiting connector **90** and the connector **10** are connected properly, the connector **10** may move relative to the waiting connector **90** and contact points between the male terminals **91** and the female terminals **50** may slide to be abraded.

However, in this embodiment, the press-fit ribs **35** are on a tip part of the fitting **25**. The press-fit ribs **35** are pressed into contact with the inner surface of the receptacle **97** and are squeezed when fitting the fitting **25** into the receptacle **97**, thereby fixing the fitting **25** and the receptacle **97**. At this time, the press-fit ribs **35** are at plural positions on the side surfaces facing each other. Thus, the fitting **25** is fixed firmly to the receptacle **97** even if forces in various directions are applied. In this way, the contact points between the male terminals **91** and the female terminals **10** cannot slide finely to be abraded due to the vibration of the connector **10** in the waiting housing **95** and there is no reduction of connection reliability between the male terminals **91** and the female terminals **50**. Note that since the press-fit ribs **35** are on the outer periphery located outward of the positions where the male terminals **91** and the female terminals **50** are connected, the transmission of vibration to the female terminals **50** can be reduced and fine sliding abrasion of the terminals **50**, **91** is prevented more effectively as compared to the case where press-fit ribs are at positions vertically spaced from the contact positions of the female terminals **50**.

Further, the rubber plugs **55** are mounted on the wire W connected to the female terminals **50**. The rubber plug **55** is held in close contact with the outer peripheral surface of the wire W and the inner surface of the cavity **31** so that the wire W is fixed to the cavity **31** via the rubber plug **55**. Thus, even if vibration is transmitted to the wire W, the wire W does not move relative to the cavity **31**, and a relative movement of the female terminal **50** connected to the wire W can be suppressed.

As described above, the housing **20** and the movable member **40** are separate members used by being coupled, and the housing **20** and the movable member **40** are reduced in size as compared to the case where a housing is integral with a moving structure with respect to an attaching member. Thus, even if a moving structure for the attaching member **60** is provided after the female terminals **50** and the wire W are accommodated into the housing **20**, the entire length of the housing **20** can be shortened and the occurrence of a molding failure can be suppressed. Further, since the moving structure such as the resilient locking piece **49** is arranged above the opening **36** for inserting the female terminals **50**, the entire connector housing can be miniaturized.

The invention is not limited to the above described and illustrated embodiment. For example, the following embodiments also are included in the scope of the invention.

Although the terminals to be accommodated into the connector **10** are the female terminals **50** in the above embodiment, these terminals may be male terminals and mating terminals may be female terminals.

Although the rubber plugs **55** are mounted on the wire W in the above embodiment, no rubber plug may be used.

Although the press-fit ribs **35** are provided on each side surface in the above embodiment, only one press-fit rib may be provided as a whole or a plurality of press-fit ribs may be provided on facing side surfaces. Further, no press-fit rib may be provided.

Although the connector **10** is a connector constituting the interlock circuit in the above embodiment, the connector **10** may be another connector if this connector is movably held in the attaching member.

LIST OF REFERENCE SIGNS

10 . . . connector
20 . . . housing
21 . . . housing body
25 . . . fitting
27 . . . lower wire accommodating portion

31 . . . cavity
35 . . . press-fit rib
36 . . . opening
37 . . . coupling wall
39 . . . locking hole
40 . . . movable member
41 . . . upper wire accommodating portion
43 . . . locking projection
45 . . . held portion
47 . . . engaging piece
49 . . . resilient lock
50 . . . female terminal
55 . . . rubber plug
60 . . . attaching member
61 . . . attaching member body
63 . . . projecting portion
65 . . . holding piece
67 . . . rear stop wall
67A . . . hole
70 . . . holding portion
71 . . . engaging groove
73 . . . accommodating portion
80 . . . case
81 . . . opening
90 . . . waiting connector
91 . . . male terminal
95 . . . waiting housing
97 . . . receptacle
W . . . wire

What is claimed is:

1. A connector to be mounted into an attaching member provided detachably to a case of a device accommodating a waiting connector to face the waiting connector and to be connected to the waiting connector, comprising:

a housing having housing peripheral walls defining a housing cavity, the housing cavity being open in a first direction, and the housing peripheral walls including a resiliently deflectable coupling wall having a lock hole formed therein;

at least one terminal accommodated in the housing cavity, the at least one terminal having a wire extending from an end of the at least one terminal in the first direction; and

a movable member having a movable member peripheral wall and a movable member cavity formed therein, the movable member being open in a second direction opposite the first direction, a locking projection projecting on an inner surface of the movable member peripheral wall, the movable member being disposed surrounding the housing so that the housing is accommodated in the movable member cavity with the locking projecting engaging the lock hole, and the movable member including a held portion to be held movably within a plane perpendicular to a connecting direction to the waiting connector with respect to a holding portion provided in the attaching member; wherein

the locking projection and the lock hole define a coupling configured to couple the housing and the movable member; and

the movable member and the housing defining a wire accommodating portion for accommodating the wire extending from the at least one terminal.

2. The connector of claim **1**, wherein:

the at least one terminal is insertable into the housing cavity through the opening (**36**);

an engaging piece serving as the held portion and to be engaged with an engaging groove provided as the holding portion is provided on an end part of the movable member on the side of the attaching member;

the engaging piece projects in a predetermined direction within a plane perpendicular to the connecting direction to the waiting connector;

the engaging groove extends in a direction intersecting a projecting direction of the engaging piece within the plane perpendicular to the connecting direction to the waiting connector;

a clearance for moving the connector in an extending direction of the engaging groove is provided between the engaging piece and an inner wall of the engaging groove;

the movable member includes a resilient lock serving as the held portion and to be locked to an accommodating portion provided as the holding portion;

the resilient lock projects toward the attaching member within the plane perpendicular to the connecting direction to the waiting connector and extends in the projecting direction of the engaging piece;

a clearance for moving the connector in an extending direction of the resilient lock (**49**) is provided between the resilient lock and the accommodating portion; and

the resilient lock is arranged above the opening.

3. The connector of claim **2**, wherein:

a press-fit rib configured to fix the housing and a waiting housing of the waiting connector by being pressed into contact with an inner surface of the waiting housing to be squeezed in connecting the housing to the waiting housing is provided on an outer surface of the housing; and

a rubber plug mounted on the wire and held in close contact with an outer peripheral surface of the wire and a cavity of the housing, the terminal being accommodated in the cavity.

* * * * *