United States Patent

Miller

[15] **3,662,807**

[45] **May 16, 1972**

[54] DISPLAY DEVICES

[72] Inventor: **Melvin M. Miller,** 3302 Stoney Crest, Bloomington, Ind. 47401

[22] Filed: **June 29, 1970**

[21] Appl. No.: **50,586**

[52] **U.S. Cl.** **160/135,** 160/351

[51] **Int. Cl.** **A47g 5/00**

[58] **Field of Search** 160/135, 351, 231; 52/627, 52/628

[56] **References Cited**

UNITED STATES PATENTS

3,463,218	8/1969	Cannon et al.	160/351 X
3,416,282	12/1968	Daugherty	52/627
2,906,657	9/1959	Davidson	160/231 X

Primary Examiner—Peter M. Caun
Attorney—Donald R. Bahr

[57] **ABSTRACT**

A display device having a composite hinged section which is adapted to receive a plurality of display panels. The hinge section generally consist of a hinge means and a plurality of display panel retaining means. In the preferred embodiment the hinged section is formed from a plurality of U shaped channels the backs and or side of which are connected in such fashion that the individual channels can move in a plane which is parallel with the axis of said channels. The channels can be connected by a plurality of means. It is preferred that a hinge be formed by a sheet material which is attached to the display panel retaining means or that the hinge be an integral part of the display panel retaining means.

10 Claims, 80 Drawing Figures

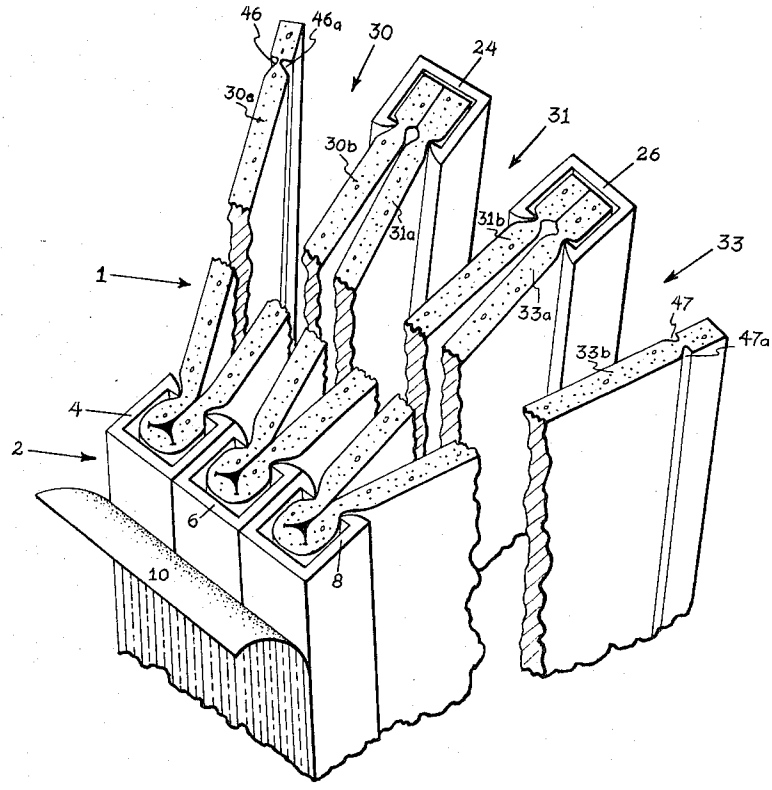

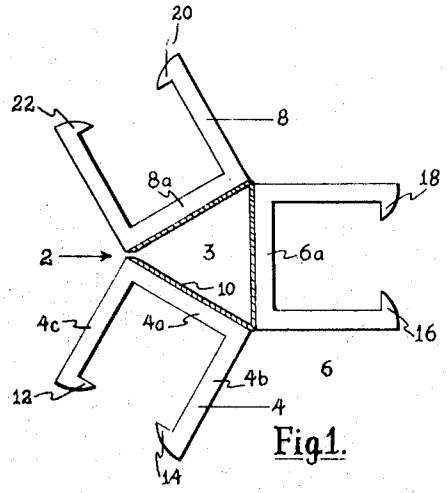

Fig.1.

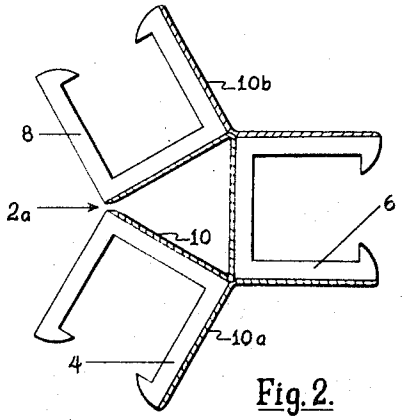

Fig.2.

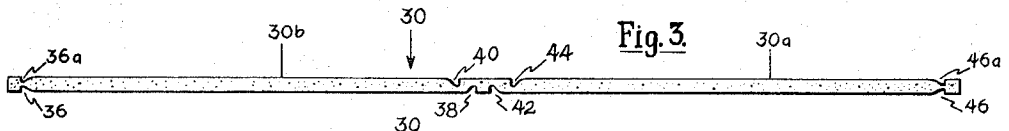

Fig.3.

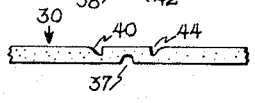

Fig.4.

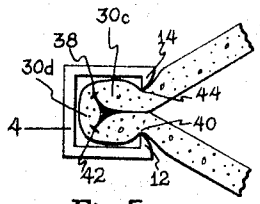

Fig.5.

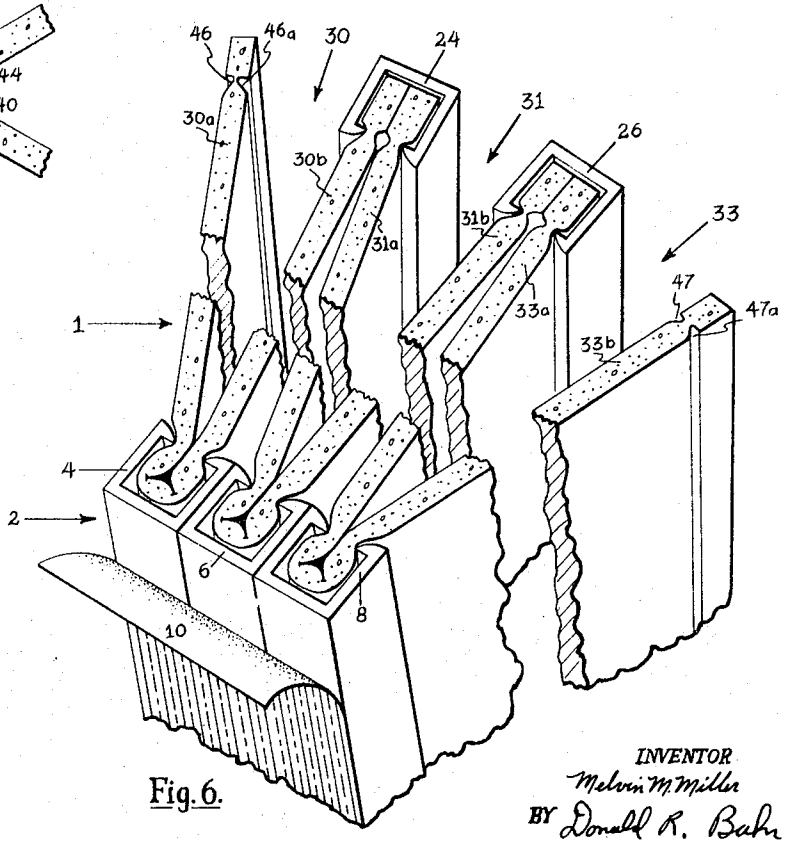

Fig.6.

INVENTOR
Melvin M. Miller
BY Donald R. Bahr
ATTORNEY

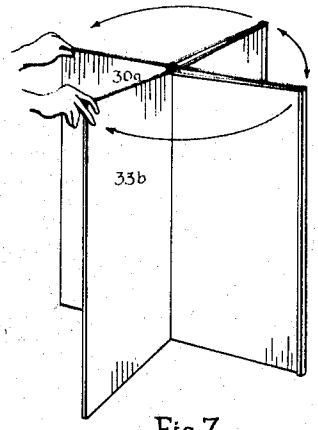

Fig. 7

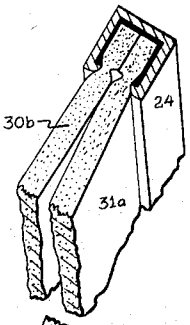

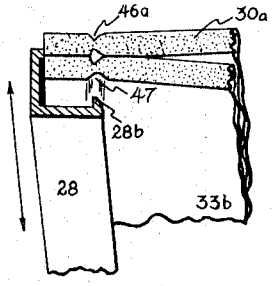

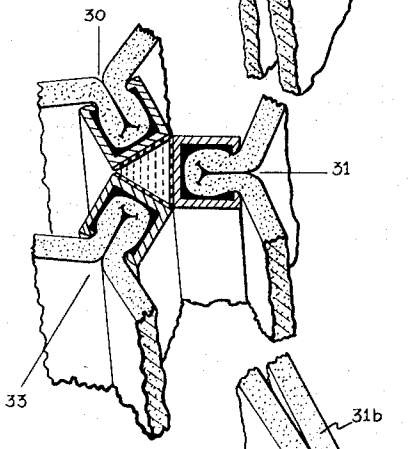

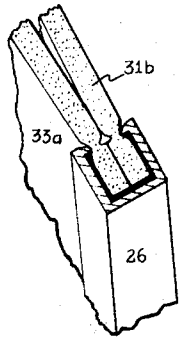

Fig. 8.

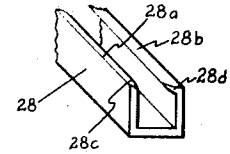

Fig. 9

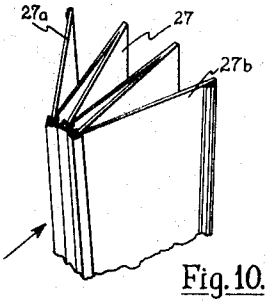

Fig. 10.

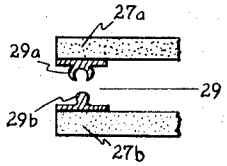

Fig. 11.

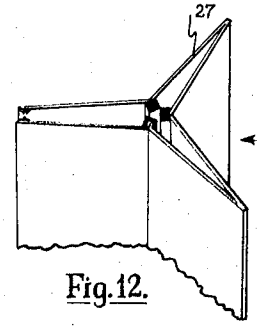

Fig. 12.

INVENTOR
Melvin M. Miller
BY Donald R. Bahr
ATTORNEY

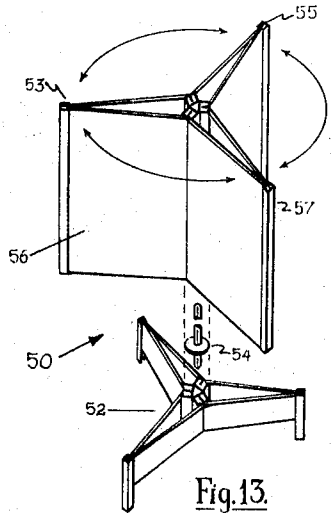

Fig. 13.

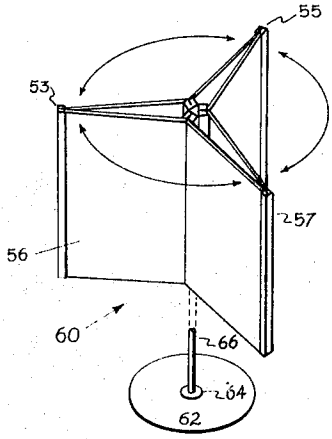

Fig. 15.

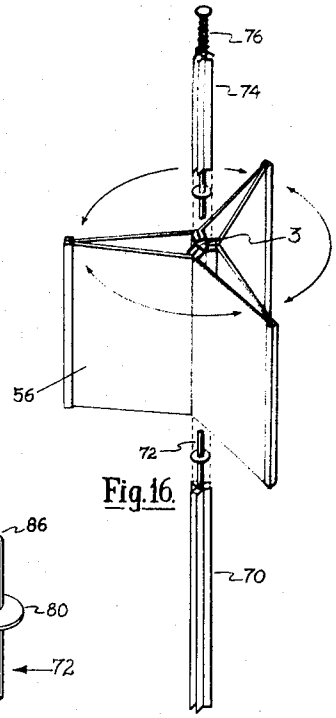

Fig. 16.

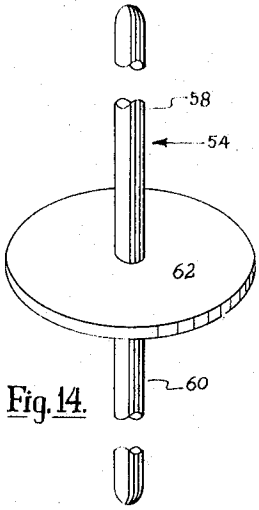

Fig. 14.

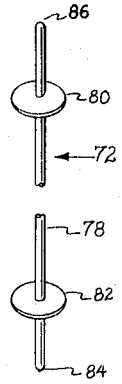

Fig. 17.

INVENTOR
Melvin M. Miller
BY Donald R. Bahr
ATTORNEY

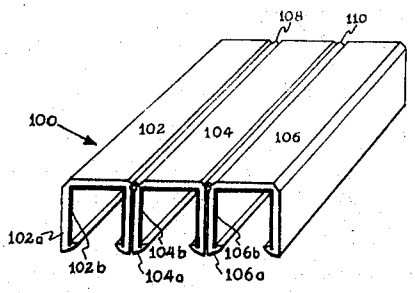

Fig. 20.

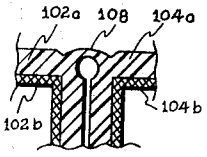

Fig. 21.

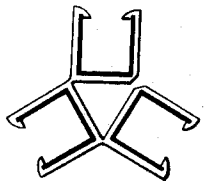

Fig. 22.

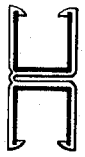

Fig. 23.

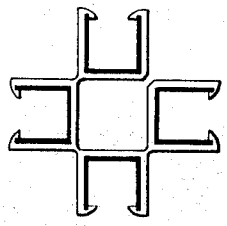

Fig. 24.

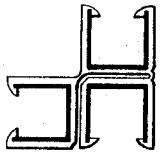

Fig. 25.

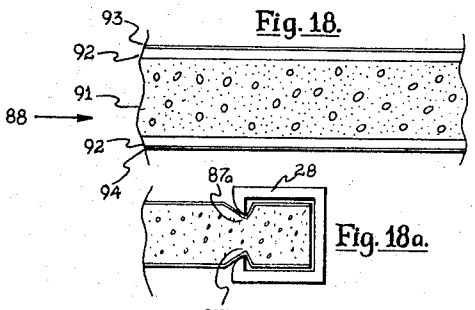

Fig. 18.

Fig. 18a.

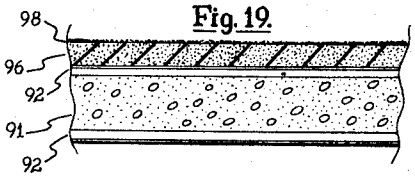

Fig. 19.

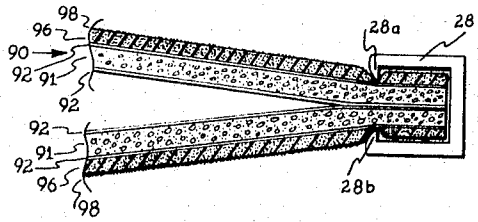

Fig. 19a.

INVENTOR
Melvin M. Miller
BY Donald R. Bahr
ATTORNEY

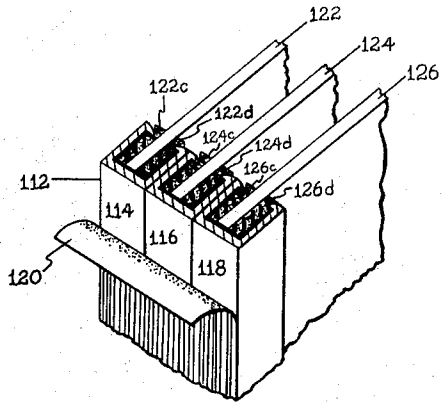

Fig. 26.

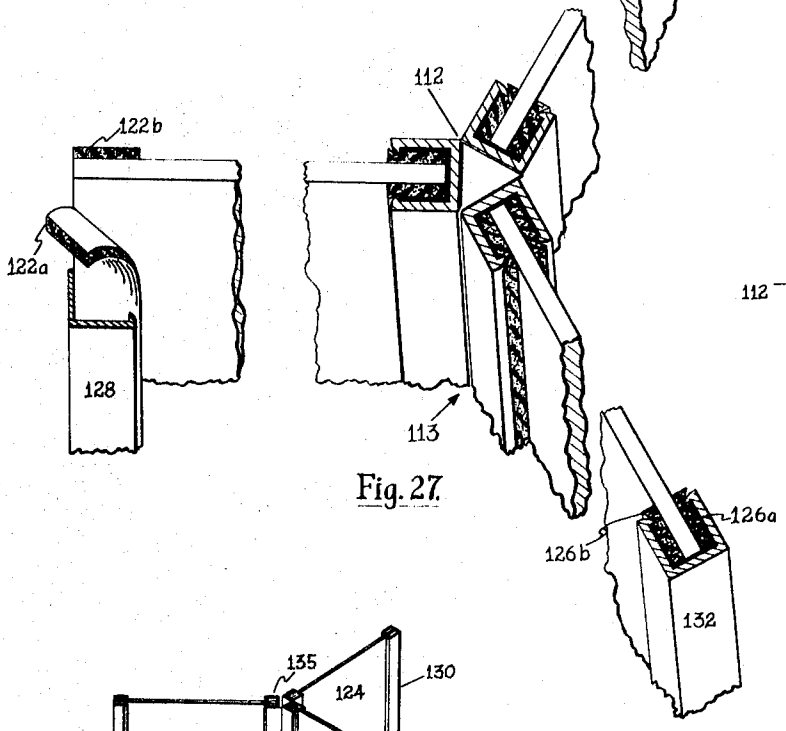

Fig. 27.

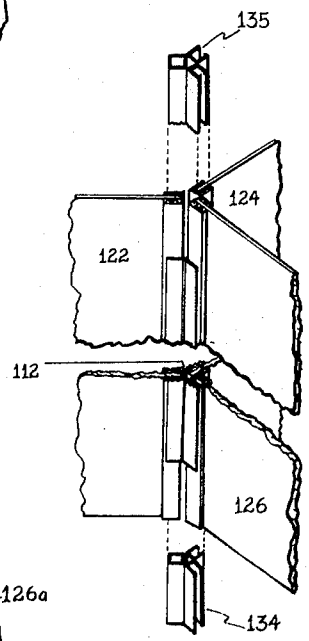

Fig. 28.

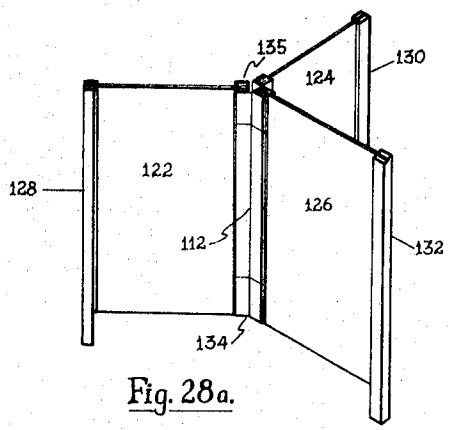

Fig. 28a.

INVENTOR
Melvin M. Miller
BY Donald R. Baha
ATTORNEY

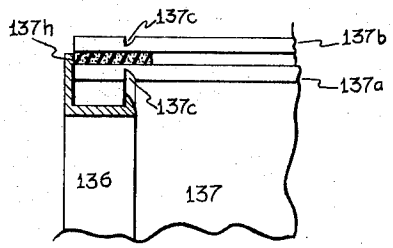

Fig. 29.

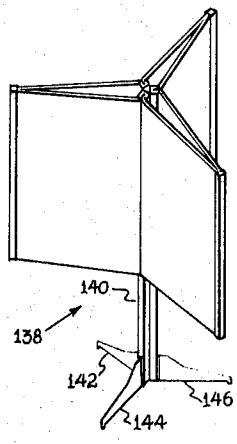

Fig. 30.

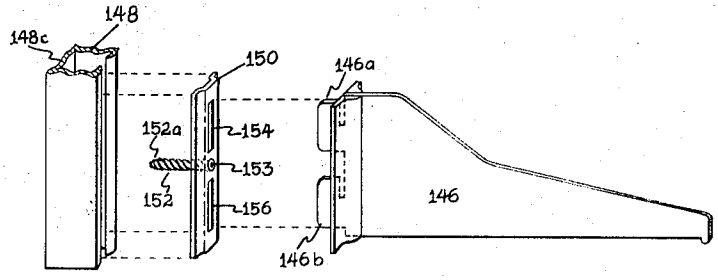

Fig. 31.

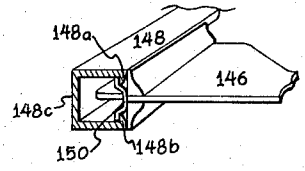

Fig. 32.

INVENTOR
Melvin M. Miller.
BY Donald R. Bahr
ATTORNEY

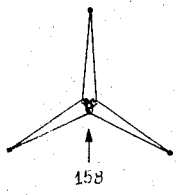

Fig. 33.

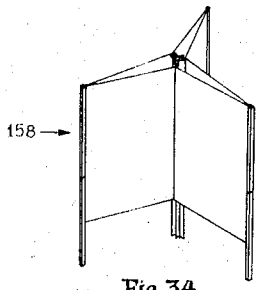

Fig. 34.

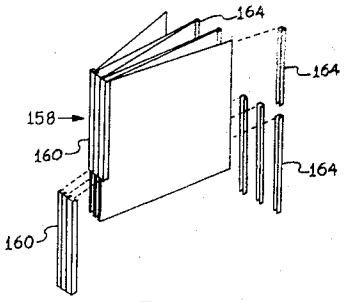

Fig. 35.

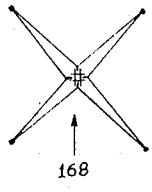

Fig. 36.

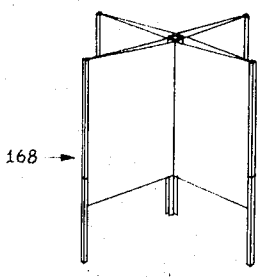

Fig. 37.

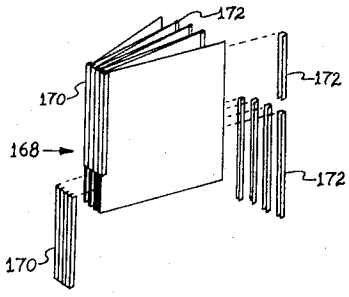

Fig. 38.

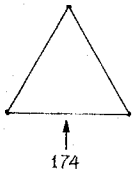

Fig. 39.

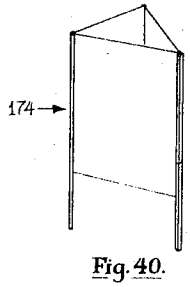

Fig. 40.

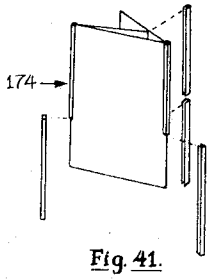

Fig. 41.

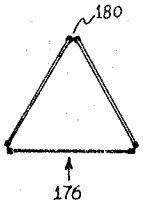

Fig. 42

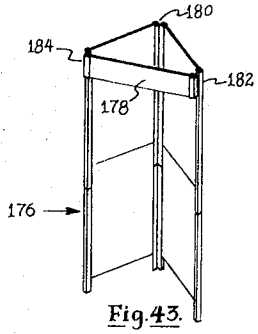

Fig. 43.

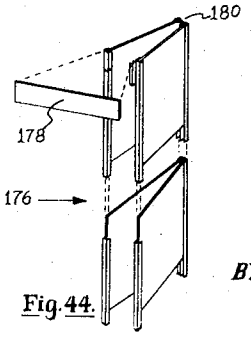

Fig. 44.

INVENTOR
Melvin M. Miller
BY Donald R. Bahr
ATTORNEY

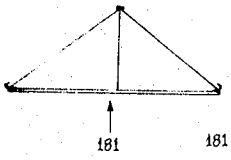

Fig. 45.

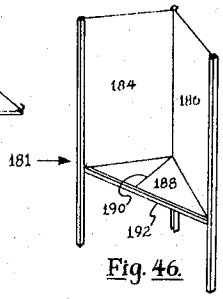

Fig. 46.

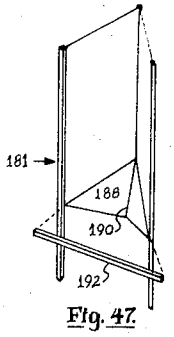

Fig. 47.

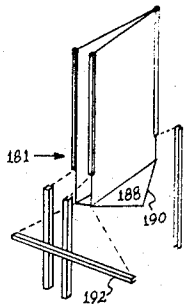

Fig. 48.

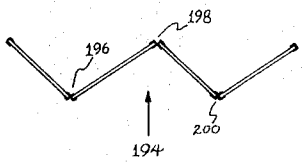

Fig. 49

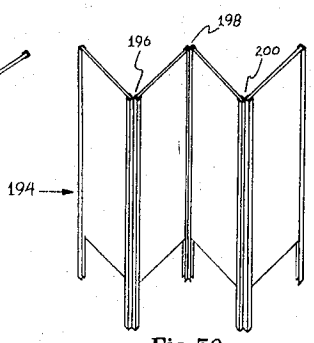

Fig. 50.

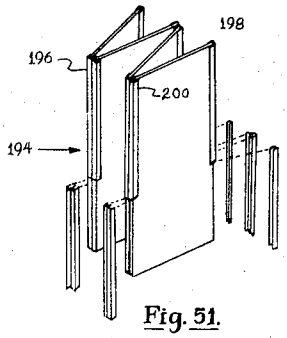

Fig. 51.

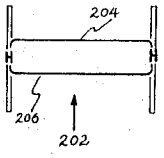

Fig. 52.

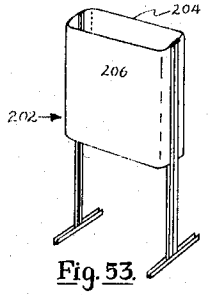

Fig. 53.

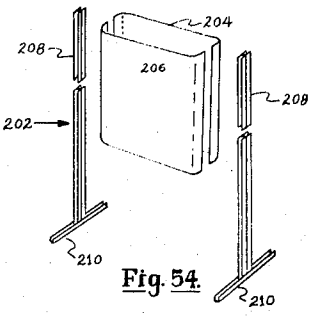

Fig. 54.

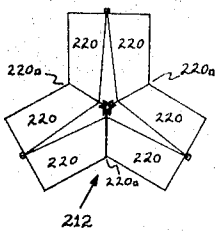

Fig. 55.

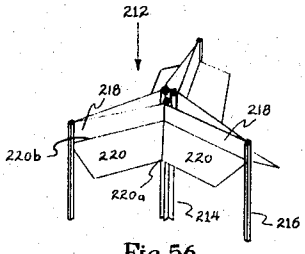

Fig. 56.

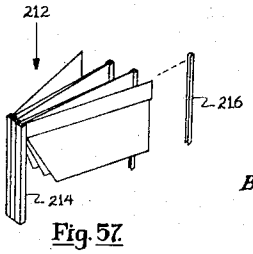

Fig. 57.

INVENTOR
Melvin M. Miller
BY Donald R. Bahr
ATTORNEY

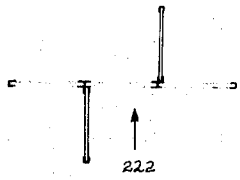

Fig. 58.

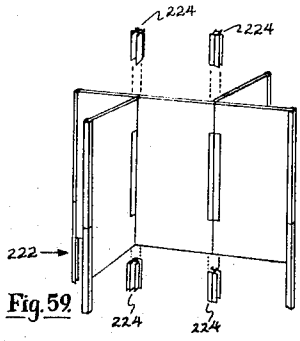

Fig. 59.

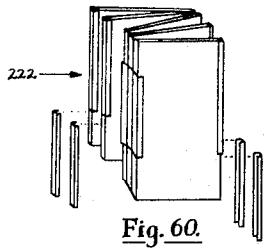

Fig. 60.

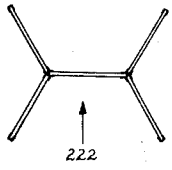

Fig. 61.

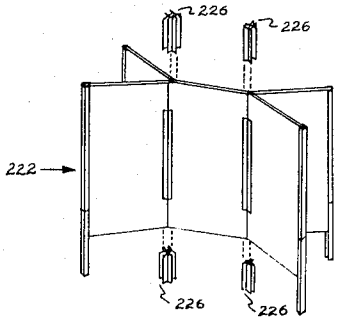

Fig. 62.

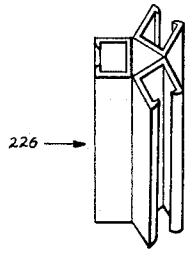

Fig. 63.

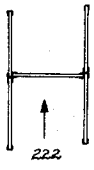

Fig. 64.

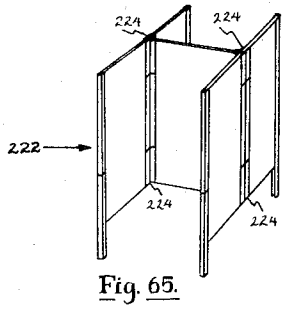

Fig. 65.

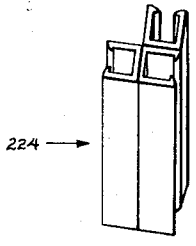

Fig. 66.

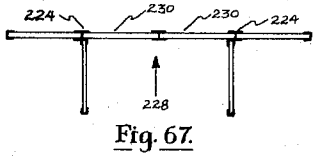

Fig. 67.

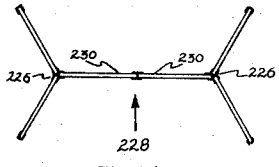

Fig. 68.

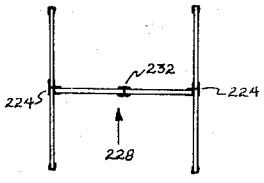

Fig. 69.

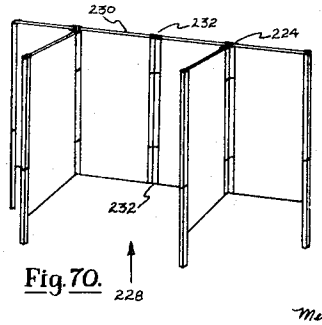

Fig. 70.

INVENTOR
Melvin M. Miller
BY Donald R. Behn
ATTORNEY

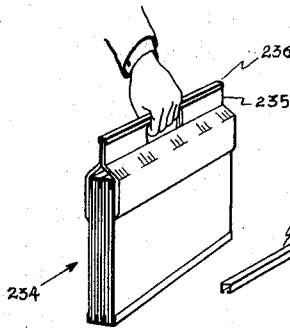

Fig. 71.

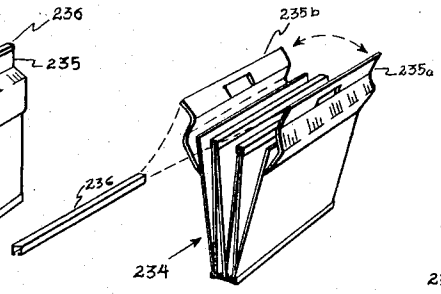

Fig. 72.

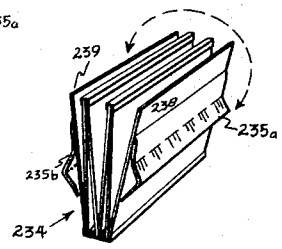

Fig. 73.

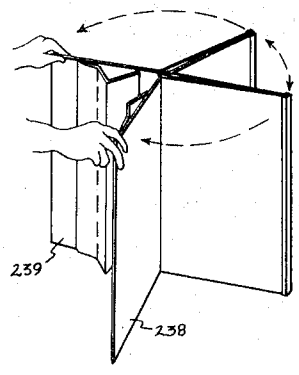

Fig. 74.

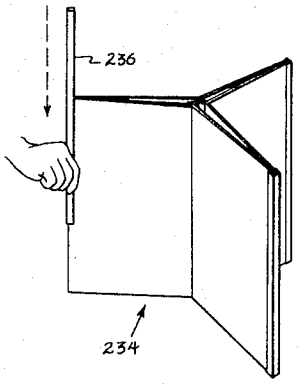

Fig. 75.

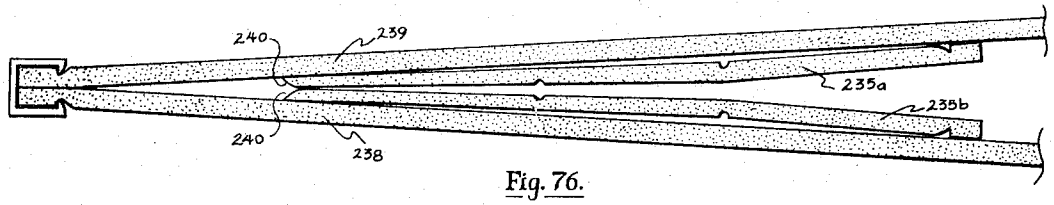

Fig. 76.

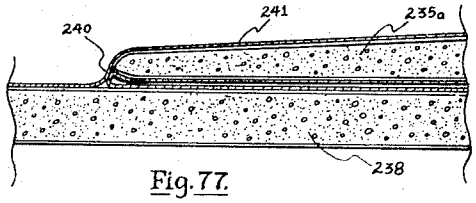

Fig. 77.

INVENTOR
Melvin M. Miller
BY Donald R. Baker
ATTORNEY

DISPLAY DEVICES

BACKGROUND OF THE INVENTION

A. Field of the Invention

This invention is concerned with foldable display devices which are useful as visual aids. More specifically the field of this invention is display devices which are formed from elongated channel sections and display panels wherein said display panels can radially project from a hinged section.

B. Description of the Prior Art

Display devices which utilize a wide variety of sheet and channel sections are known in the prior art. For example many displays consist of for example plywood sheets or sheets of corrugated paper which are inter connected by a series of channel members. The prior art display devices suffer from a major handicap in that they are difficult to assemble. As the result of this difficulty the prior art devices are not suitable for use on a short term basis, for example a short sales presentation.

In contrast with these problems the device of this invention can be assembled and made ready for usage in a short period of time.

Most of the prior art devices require that a large number of mechanical connections be made in the assembly operation. The device of this invention can be assembled to produce a complete display by the formation of a single mechanical connection or a small number of connections depending on the embodiment.

Most of the prior art display devices due to their complexity require an above average mechanical appitude for assembly. Contra to this the subject display device can be easily assembled by a person with minimal mechanical dexerity.

Many of the prior art devices can not be folded into a small package. The device of this invention can be readily folded into a compact package.

Finally the prior art display devices are disadvantageous in that if they incorporate a plurality of panels which are angularly disposed to each other, these panels can not remain attached to their supporting members when the display is disassembled. In contrast the display of this invention can incorporate a plurality of angularly disposed panels which do not have to be disconnected from the support sections when the display is disassembled.

Finally in the display device of this invention the supporting channels and sheet sections cooperate in such a fashion that a display of superior structural rigidity is produced. In contrast in many of the prior art devices the component parts do not cooperate so as to produce a rigid structure.

C. Summary of the Invention

The subject invention relates to display devices which incorporate a composite hinged section. Attached to the hinged section are plurality of display panels. The display device of this invention can incorporate a large number of configurations.

BRIEF DESCRIPTION OF THE DRAWINGS

FIG. **1** and **2** are cross section views of hinge center sections in accordance with this invention.

FIG. **3** and **4** are cross section views of display panels showing scores which are adapted for use in this invention.

FIG. **5** is a cross section showing the nip which may be used in securing display panels to the channels of the hinge center section.

FIG. **6** is a top perspective view of a display of this invention in a semi-folded stance.

FIG. **7** is a side view illustrating the fold-out step of the assembly of the display device of FIG. **6**.

FIG. **8** is a cutaway top perspective view of the folded-out assembled display device of FIG. **6** and **7**.

FIG. **9** is a top perspective view illustrating the details of the channels sections used in this invention.

FIG. **10**, **11** and **12** illustrate another embodiment of the display device of this invention wherein channels are not used to lock the outer extremities of the display panels together.

FIGS. **13**, **15** and **16** are top perspective views which illustrate rotatable displays in accordance with this invention.

FIGS. **14** and **17** are side perspective views illustrating bearings for use in the displays of FIG. **13**, **15** and **16**.

FIGS. **18** and **19** are cutaway side views of display panels which can be used in this invention.

FIG. **18a** is a cutaway side view showing the mode whereby the display panel of FIG. **18** (after being scored is used singly and is gripped by a channel.

FIG. **19a** is a cutaway side view showing the mode whereby the display panels of FIG. **19** (without score) are gripped by a channel.

FIG. **20** is a top perspective view of an alternate hinge section which can be used in this invention where the hinges are integral with the channel sections.

FIG. **21** is a side view illustrating in detail the hinge of the hinge section of FIG. **20**.

FIG. **22**, **23**, **24** and **25** are top view illustrating some of the possible configurations which the hinge center sections of FIG. **20** can assume.

FIG. **26**, **27**, **28** and **28*a*** are top perspective views illustrating an alternate embodiment of this invention wherein solid (non scored) display panels may be used.

FIG. **29** is a top perspective view of this invention illustrating still another embodiment of this invention.

FIG. **30** to **70** are top and perspective views illustrating various embodiments of display devices in accordance with this invention, their plan view, their assembly, and disassembly and their construction.

FIG. **71** to **77** are top perspective views illustrating a briefcase type display in accordance with this invention.

DESCRIPTION OF THE PREFERRED EMBODIMENT

Referring to FIG. **1** it can be seen that composite hinge section **2** incorporates a plurality of display panel retaining means, in this instance U shaped channels **4**,**6** and **8**. The bottom sections **4*a***, **6*a*** and **8*a*** of channels **4**,**6** and **8** are securred together by a hinge means **10**. In accordance with one embodiment of this invention hinge means **10** consists of a flexible tape which is backed on one side with an adhesive. The adhesive is used to secure the tape to bottom sections **4*a***, **6*a*** and **8*a***, thereby securing channels **4**,**6** and **8** to each other. The application of hinge mans **10** in the form of tape to the backs of the U shaped channels is further illustrated in FIG. **6**, where it can be seen that channels **4**,**6**, and **8** are securred in relationship to each other by means of tape **10**.

FIG. **2** illustrates another embodiment of a hinge section **2*a*** which can be used in this invention. In this embodiment additional hinge means **10*a*** and **10*b*** are provided for additional strength. Hinge means **10*a*** is attached to one side of channel **4** and to one side of channel **6**. Hinge means **10*b*** is attached to one side of channel **6** and to one side of channel **8**.

With reference to FIGS. **1** and **6** it can be seen that in FIG. **1** the sheet retaining means (U shaped channels **4**, **6** and **8**) are angularly disposed to each other. Due to the flexible nature of the hinge between these channels, hinge section **10**, these channels can be positioned in such a manner that they are parallel with each other. This stance is illustrated in FIG. **6**. Naturally when the channel sections are parallel with each other display panels contained therein are also parallel with each other. These display panels will be described in detail herein below.

Referring in detail to U shaped channel **4** of FIG. **1** it can be seen that the channel incorporates a bottom section **4a** and a pair of opposing side sections **4*b*** and **4*c***. The upper edges of opposing side sections **4*b*** and **4*c*** incorporate a pair of opposing lips **12** and **14**. These lips are adapted to secure scores which are an integral part of the display panels. U shaped channels **6** and **8** likewise incorporate lip sections **16**, **18**, **20** and **22**.

With reference to FIG. **3**, **4**, and **5** it can be seen that display panel **30** incorporates a plurality of scores **36**, **36*a***, **38** **40**, **42**, **44**, **46**, and **46*a***. In use display panel **30** is folded inward upon

itself in such a fashion that scores **36** and **46** are face to face with each other. When this positioning is effected sheet faces **30***a* and **30***b* are outwardly disposed and are useful as display surfaces. (For example in structures **176**, **194**, **222** and **228** as will be described in detail herein below.)

Likewise, when this face to face relationship is effected a nip **30***c* is formed which is illustrated in FIG. **5** and **8**. Nip **30***c* is generally formed by the folding of the two halves of display panel **30** inward on each other. In order to form a nip scores **38** and **42** are provided. These scores allow the two halves of the display panel to be folded inward whereupon the space between these scores **30***d* becomes the base of the nip. When the display panel is folded inward upon itself as described above scores **40** and **44** are outwardly disposed. These scores are then adapted to receive lips **12** and **14** in such a fashion that the nip is secured in the channel **4** of the composite hinge section.

Both sides of display panel **30** are scored in accordance with scores **36**, **36***a*, **46** and **46***a*. These scores on both sides of the edges of display panel **30** allow maximum versatility in its use. In accordance with this aspect of this invention its own loose ends **30***a* and **30***b* can be locked into a U shaped channel to produce structures such as **176**, **194**, **222** and **228** as will be described later.

FIG. **4** illustrates another embodiment of display panel **30** wherein opposing scores **38** and **42** are replaced with a single score **37**. When the two halves of display panel **30** are folded inward upon itself in a manner as described above a nip (not illustrated) is formed wherein scores **40** and **44** are outwardly disposed.

FIG. **6** further illustrates a display device in accordance with this invention in a folded stance. Display device consist of a composite hinge center section **2** in which are three display panels **30**, **31** and **33**. The adjacent backs of display panels **30**, **31** and **33** are secured to each other by means of three outrigger legs **24**, **26** and **28** (not illustrated). This securing is effected by positioning the lips of the outrigger legs in scores **47** and **46***a* or their equivalents. In the unassembled or folded flat stance outrigger leg **28** which joins backs **30***a* and **33***b* together is removed and stored separately with the composite assembly. When stored flat the display device of this invention occupies minimal storage space.

Referring to FIGS. **6**, **7**, and **8** it can be seen that the assembly of the display device of this invention is effected by rotating panel **33***b* in a clockwise direction and panel **30***a* in counter clockwise direction. When these panels are in a back to back relationship with each other scores **46***a* and **47** contained thereon are outwardly facing. Panels **30***a* and **33***b* are then secured in relationship with each other by positioning channel **28** over the edge thereof in such a manner that lips **28***a* and **28***b* of channel **28** are positioned in scores **46***a* and **47**. The positioning of channel **28** over panels **30***a* and **33***b* is further illustrated in detail in FIG. **8** where it can be seen that the channel is generally moved in an axis which is parallel with the axis of scores **46** and **47**.

From a further examination of FIG. **6** and **8** it can be seen that panels **30***b* and **31***a* and **31***b* and **33***a* are securred together with channels **24** and **26**. When panels **30***a* and **31***a*, **30***b* and **33***b* are secured together in the manner as described above the outrigger legs and hence the composite panel sections are positioned at approximately 120° degree to each other.

FIG. **8** further illustrates an important feature of this invention namely that the opposite segments of each panel for example segment **33***a* and **33***b* of panel **33** are stressed against each other. Due to this stressing the display devices of this invention have exceptional structural rigidity. While the applicant does not fully understand all the ramifications of this stressing, it is thought that this stressing occurs on the nips, as is exemplified by nip **33***c* of FIG. **5** wherein these nips engage channels **4**, **6** and **8**. That is all components of the display devices of this invention work together to produce a structure of exceptional rigidity when the weight of the display device is considered.

From a detailed examination of FIG. **9** it can be seen that the leading edges of lips **28***a* and **28***b* of channel **28** incorporate bevels **28***c* and **28***d* which generally facilitates the passage of the channel lips in the scores **46***a* and **47**. In view of the fact that the surfaces of panels **39***a* and **33***b* can be paper or paper like materials these bevels likewise prevent gouging in scores **46***a* and **47**, when channel **28** is being slid over the edges of panels **30***a* and **33***b*.

Rotatable displays are also within the realm of this invention. Various embodiments of these rotatable displays and parts therefor are illustrated in FIGS. **13**, **14**, **15**, **16**, and **17**. Referring to FIG. **13** it can be seen that display **50** incorporates an upper display section **56** and a base portion **52**. These components are rotatably interconnected by means of bearing member **54**.

In this connection it should be noted and as illustrated in FIG. **1** that once the display **2** is assembled a triangular shaped apeture **3** is produced. For purposes of producing a rotatable display a bearing member **54** is provided which is adapted to engage this aperture. Bearing member **54** is illustrated in detail FIG. **14**. From this figure it can be seen that bearing **54** consist of a pair of opposing end section **58** and **60** and a center portion **62**. Section **58** and **60** are of such a diameter that they are adapted to be received in apeture **3**. Center portion **62** is of such a thickness that the outrigger channel sections of display section **56** and base portion **52** do not rub or bind each other. End sections **58** and **60** of bearing **54** are generally tapered to allow the easy insertion of these ends into triangular apetures **3**. Bearing **54** can be formed from many types of materials such as wood, metal or a plastic. The preferred material is a plastic having a low coefficient of friction such as a teflon or a nylon.

Another rotatable display device in accordance with this invention is illustrated in FIG. **15**. In this instance a display section **56**, which is identical to display section **56** as described above, is positioned on a circular base **62**. This base incorporates a post **66** which is adapted to be received in apeture **3** in a manner as described above in connection with end section **58** and **60** of bearing **54**. Base **62** further incorporates a bushing **64**. This bushing generally positions display section **56** slightly above base **62** and the surrounding floor in such a fashion that outrigger channel sections **53**, **55** and **57** do not abut against or drag on the floor in such a fashion as to impede the rotation of display section **56**. In accordance with the preferred aspects of this invention bushing **64** is formed from a low friction material such as a nylon, teflon or polyethylene.

FIG. **16** and **17** illustrate still another rotatable display device and component parts therefor in accordance with this invention. This structure uses a display section **56** which is identical to that described above. Positioned in apeture **3** is a bearing support **72** which has a pair of opposing end sections **84** and **86**. These end sections are connected by a center section **78**. End sections **84** and **86** are adapted to be received in apetures not illustrated which are contained in the ends of poles **70** and **74**. These poles can consist of any convenient material which incorporates a central apeture. In accordance with the preferred aspect of this invention poles **70** and **74** consist of sections of a hinge center section which are securred together in such a manner that the channels are not pivotally connected with each other. The upper extremity of pole **74** incorporates a spring biased support **76** which allows the overall structure to be positioned between ceilings and floors of varying heights. Once the overall structure is positioned between a ceiling and a floor spacers **80** and **82** relieve the pressure which the spring biased support **76** puts on the poles **70** and **74**. That is as the result of these spacers the ends of the hinge center section of display **56** do not bind and it is allowed to rotate freely.

In the above description the fastening of various panels together so as to produce a finished structure is accomplished by the slipping of a locking channel, for example channel **28**, over the edges of these panels. In accordance with another aspect of this invention the outrigger channels are not needed but instead a display device is produced which is supported by

a hinge center section. This embodiment **25** is generally illustrated in FIGS. **10**, **11** and **12** wherein panel **27** is formed as a continuous unit from a single sheet of material. In order to provide a joint between the edges **27***a* and **27***b* which can be opened and closed, these edge sections are provided with a snap **29** having opposing male and female snaps section **29***a* and **29***b*. In this embodiment it is understood by one skilled in the art that many types of fastening arrangements can be used in lieu of snap **29** for example a section of locking channel as described above which is the same length as edges **27***a* and **27***b* can be used to effect this fastening. LIkewise hook and loop panel fastening means can be used. It is within the realm of this invention to utilize these alternative fastening means.

When the alternative embodiment **25** of this invention as is described above is utilized an appropriate base may be provided to allow the display to stand upright. Examples of suitable bases are described above in connection with rotatable displays.

Sheet materials which can be used in accordance with this invention to form the panels of the display device include sheets of polymeric materials.

Examples of polymeric materials which are suited for use in this invention include both homopolymeric and copolymeric substances, such as (1) vinyl resins formed by the polymerization of vinyl halides or by the copolymerization of vinyl halides with with unsaturated polymerizable compounds, e.g., vinyl esters, B-unsaturated acids, B-unsaturated esters, B-unsaturated ketones, B-unsaturated aldehydes and unsaturated hydrocarbons such as butadienes and styrenes; (2) poly olefins such as polyethylene, polypropylene, polybutylene, polyisoprene, and the like, including copolymers of poly- -olefins; (3) polyurethanes such as are prepared from polyols and organic polyisocyanates; (4) polyamides such as polyhexamethylene adipamids; (5) polyesters such as polymethylene terephthalates; (6) polycarbonates; (7) polyacetals; (8) polyethylene oxide; (9) polystyrene, including polymers of styrene with monomeric compounds such as acrylonitrile and butadiene; (10) acrylic resins as exemplified by the polymers of methyl acrylate, actylamide, methylol acrylamide, acrylonitrile, and copolymers of these with styrene, vinyl pyridines, etc; (11) neoprene; (12) condensates of aldehydes, especially formaldehyde and formaldehyde engendering substances such as paraformaldehyde; (13) modified and unmodified condensates of hydroxy benzenes like phenol, resereinol etc., with the aforementioned aldehydes; (14) silicones such as aimethyl and methyl hydrogen polysiloxanes; (15) unsaturated polyesters; (16) cellulose esters including the nitrate, acetate, propionate, etc; (17) phenoxy resins; (18) polysulfanes and; (19) polyphenylene oxide resins. This list is not meant to be limiting or exhaustive but merely to illustrate the wide range of polymeric materials which may be employed in the present invention.

The invention is also adapted to utilize a plurality of wood base products such as plywood, wood fiber composites, sheet lumber solid fiber paper, corrugated paper etc. The latter mentioned corrugated paper is particularly suited for use in this invention in that it is readily available, economical, light and it can be readily scored in such a fashion that it will flex or bend on a score line.

The most preferred sheet material for use in accordance with this invention are paper-foam plastic composite sheets as are illustrated in FIG. **18**, **18***a* and **19** and **19***a* A suitable composite sheet **88** generally consist of a center layer of foam plastic **91** to which is sandwiched a pair of opposing paper layers **92**. It is preferred that foam layer **91** be foamed polystyrene. However, it is understood that this foam layer can be any number of a wide range of foamed plastic materials such as foams of the polymeric materials as described above in connection with sheet materials. It is to be noted that layer **91** can likewise be a cellulose composite material such as may be formed from wood pulp. Composite sheet **91** likewise may incorporate additional layers **93** and **94** which may be for example a decorative layer. With layers **93** and **94** all manner of decorative coatings for example imitation wood grain surfaces, can be imparted to sheet **88**. From FIG. **18***a* it can be seen that prescored sheet **88** can be held in channel **28** as a single, double thick panel which has been scored on both sides (scores **87***a* and **87***b*)

A particularly advantageous foam composite panel for use in this invention **90** is generally illustrated in FIG. **19**. In this structure a central layer of a rigid or semi foam **91** is backed on one side by a paper layer **92**. The other side of central foam layer **91** is backed with a paper layer **92** and a flexible layer of a non rigid foam **96**. Layer **96** can be any type of non rigid foam wherein the density and cell size is controlled to produce the desired degree of resiliency. Examples of suitable foams are foamed polyurethane, polyethylene, polystyrene etc.

Foam layer **96** can further incorporate a flocked coating **98** in order to give the sheet a rich appearance. The rich appearance and the asethetic properties of the overall display are generally enhanced when the flocked layer is a background color such as a black, deep red or dark green.

When composite sheet **90** is utilized it is not necessary for the sheet to incorporate scores on its outer edge for purpose of allowing the lips of the outrigger channel to engage the same. As is illustrated in FIG. **19***a* it can be seen that lips **28***a* and **28***b* of channel **28** engage foam layer **96**. The resiliency of this layer prevents channel **28** for slipping thereon.

The channels used to form the hinge section and outrigger support channels for example channels **4**, **6**, **8**, **24**, **26** and **28** as described above of this invention can be formed from a large number of metallic and non metallic substances such as steel, aluminum, plastics etc. For maximum structural ridigity it is preferred that these sections be formed from a metal. When these sections are metal they are adapted to grip the above described panel sections in a fashion so as to produce a bond of lasting rigidity. Likewise, the channel sections can be formed from a large variety of plastic materials such as those described above in connection with sheet materials. For strength in some instances it is desirable that these sections be formed from fiber reinforced plastic materials such as materials which are reinforced with glass fibers. Likewise, composite channels formed from a metal and a plastic are useful in accordance with this invention. These dual structures are generally illustrated in FIG. **20–25**.

A particularly desirable material for forming the hinge sections of these composite structures are thermoplastic materials which are flexible enough to form a live hinge. That is the channels and the hinge section which tie the channels together may be integrally formed. A composite hinge section illustrated in FIGS. **20** and **21** wherein it can be seen that composite hinge **100** incorporates channels **102**, **104**, and **106** which are tied together by integral hinges **108** and **110**. The exact structure of these hinges depends upon the degree of flexibility desired and upon the physical properties of the plastic materials from which the hinge center section is formed.

When an integral hinge center section is desired as described above the composite center section **100** can be formed in a single extrusion. Hinges **108** and **110** can be formed in this integral extrusion. With some materials it may be desirable to form channels **102** and **104** and **106** in such a fashion that they are inner connected by an unscored web. Hinges **108** and **110** are then cold worked into the extruded section by for example a pair of opposing rollers in such a fashion that minimal orentation of the polymer occurs. By adjusting the tension on the cold forming rollers a hinge of any degree of flexibility can be produced.

From a further examination of FIG. **20** and **21** it can be seen that hinge center section **100** is a composite structure that is the structure consist of a plurality of metal channels **102***b*, **104***b* and **106***b* which are embedded in polymeric channels **102***a*, **104***a* and **106***a*. This composite structure is very advantageous in that the polymeric channels import flexibility to the overall structure while the metal channels import structural rigidity thereto.

It is understood by one skilled in the art that hinge center sections which are formed solely from a polymeric material such as polypropylene are also within the realm of this invention.

It should likewise be noted that the integral hinge section as described above can be formed by scores on both sides of the channel in lieu of scores on a single side.

FIGS. **22–25** illustrate that hinge center sections which are formed with an integral hinge member can assume a large variety of stances. In view of this flexibility it is apparent that a display using these members have a wide range of design flexibility.

In the structures as discussed above the panels are generally stressed to achieve a rigid display device. LIkewise, the panels are scored in order to allow the channel section to grip the panels. In some instances it is desirable to utilize panels which will not accept a score as display surfaces. In order to permit such use the subject invention incorporates several alternate embodiments are illustrated in FIGS. **26**, **27** and **28** also **28a** and **29**. Referring to FIG. **26** in detail it can be seen that this embodiment utilizes a hinge section **112** which is similar to the hinge section **2** as described above. Channels **114**, **116** and **118** are securred together by hinge means **120** which in its preferred aspects is a section of adhesive tape. Panels **122**, **124** and **126** are further securred in hinge section **112**. These sheets are of a hard nature such that they will not accept a score. In accordance with this embodiment it is understood that all manner of sheets can be utilized in accordance with this invention.

With reference to FIG. **26** and **27** it can be seen that the edges of panels **122**, **124** and **126** are coated with a flexible and resilent strips **122***a*, **122***b*, **122***c*, **122***d*, **124***a*, **124***c*, **124***d*, **126***a*, **126***b*, **126***c*, and **126***d*. These strips are of such a nature that the lips of channels **114**, **116**, **118**, **128**, **130** and **132** are adapted to engage and retain the same. In accordance with another aspect of this invention the width of the resilent strips can be such that the lips of the U shaped channels is adapted to fit over the edge of the resilent strip when it is positioned over the panel edge. That is the width of the resilent strip is such that it just fits between the innermost edge of the lip and the bottom of the U shaped channel. These resilent strips can be formed from a plurality of materials however in the preferred embodiment these strips are a foamed polymeric material which is backed with a pressure sensitive adhesive.

With reference to FIG. **29** it can be seen that panels **137***a* and **137***b* incorporate preformed grooves **137***c* and **137***d* which are adapted to receive channels **136** in a manner as described above.

Positioned between individual panels **137***a* and **137***b* is a flexible strip **137***h*. This flexible strip generally biases grooves **137***c* aoutwardly in such a fashion that panel **137** is securely biased in channel **136**.

Because panels **122**, **124** and **126** are not in a stressed relationship with each other in the finished display it is necessary to provide a means for retaining these panels in an open position in the finished display, for this purpose retainers **134** and **135** are provided. From FIG. **28** it can be seen that these retainers consist of sections of hinge section **112**. However, in order to allow these retainers to function there is no pivital relationship between the individual channel sections of the retainer. That is these retainers generally consist of sections of a hinge section wherein the channel members are fixed in relationship to each other. Once retainer **134** is positioned over the bottom of the center portion of the display and adjacent to hinge section **112** and retainer **135** is positioned adjacent to the top of hinge section **112** the resulting display is made rigid. That is when these retainers are positioned the angular relationship of display panels **112**, **124**, and **126** is securred. It is to be noted that in this embodiment hinge section **112** is shortened to allow room for the positioning of retainers **134** and **135** in such a manner that in the resulting display these retainers appear to be a part of hinge section **112**. As is illustrated in FIG. **28***a* outrigger channels **128**, **130** and **132** are used to support the outer extremities of the finished display **113**.

It can be seen that in accordance with this embodiment the display device of this invention are adapted to utilize all manner of sheet material as display panels.

FIG. **30** to **77** generally illustrates other embodiments of display devices and panel sections which are within the realm of this invention. It can be seen that by using the hinge section of this invention a large number of display devices can be produced.

Referring to FIG. **30**, **31** and **32** it can be seen that a display device can be formed in accordance with this invention wherein base legs are securred directly to the legs of the hinge section. Display device **138** incorporates a hinge section **140** to which is securred base legs **142**, **144** and **146**. Channel **148** of hinge section **140** is adapted to receive plate **150** having elongated apetures **154** and **156** formed therein. Plate **150** further incorporates a threaded aperture **153** which is adapted to receive set screw **152**. When plate is positioned in channel **148**, screw **152** is tightened in such a manner that screw end **152***a* is biased against channel back **148**c whereupon plate **150** is biased against and securely positioned against lips **148***a* and **148***b* of channel **148**. Leg **146** further incorporates hooks **146***a* and **146***b*. When these hooks are positioned in apetures **154** and **156** the hooks engage plate **150** in such a manner that leg **146** is securred in position.

It is to be noted that if leg **146** is reversed and used in pairs these legs can function as a convenient shelf bracket for use in this invention.

With reference to FIGS. **33**, **34** and **35** it can be seen that display **158**, which is similar to the display discussed in connection with FIGS. **1–8** above has a star cross section with six display sides. In particular it should be noted that the hinge center section can be formed from two component parts **160** as can the outrigger legs in the form of component parts **164**. This arrangement generally allows the finished display device to stand upright and yet occupy minimal storage space.

Structure **168** as is illustrated in FIG. **36**, **37** and **38** incorporates a four sided star shape having eight display surfaces. For the reason as stated above the hinge center section **170** and the outrigger legs **172** are formed in two parts.

FIGS. **39**, **40** and **41** illustrate a triangular structure **174** which can be formed using the component parts of this invention.

Still another triangular display **176** in accordance with this invention is illustrated in FIGS. **42**, **43** and **44**. In display **176** three double channel hinge sections **180**, **182** and **184** are utilized. Members **182** and **184** are short segments of hinge sections. It is to be noted that by using these short segments an extra display surface **178** and dimension is added to display **176**.

A display **18** in accordance with this invention having a shelf **188** is illustrated in FIGS. **45** to **48**. This display incorporates one scored panel providing a pair of opposing display surfaces **184** and **186** which are at right angles to shelf **188**. The shelf incorporates a score **190** which allows it to fold downwardly when the display is folded for storage. Shelf **188** is made rigid by the positioning of channel **192** over its outer edge.

FIGS. **49**, **50** and **51** illustrate a folding display **194** which incorporates eight display surfaces. The display further utilizes three double hinge sections **196**, **198** and **200**. For the reasons as stated above the hinge section and other channels of this display are segmented into two parts.

In FIGS. **52** to **54** a box type display **202** is illustrated having opposing display surfaces **204** and **206**. Hinge sections **208** are segmented into two parts and are attached to base **210**.

A display **212** having six angular shelves **220** is illustrated in FIG. **55**, **56** and **57**. The display is supported by a hinge section **214** and three outrigger legs **216**. Shelves **220** are attached to the six vertical display surfaces **218** by means of scores **220***a* and **220***b*.

Six panel displays **222** having 12 display surfaces are illustrated in FIGS. **58** to **66**. It can be seen that this unit is capable of producing a display of wide range of configurations. Depending on the configuration desired a right angle locking channel **224** or an angular locking channel **226** may be used. In all of the embodiments illustrated four locking channels are utilized, however, it is understood that a suitable display could be produced using only two locking channels. Those locking channels may be produced from a single extrusion or by locking the components of a hinge section together.

A multiple purpose display **228** which is capable of assuming multiple configurations is illustrated in FIGS. **67** to **70**. This display differs from the display of FIGS. **58** to **66** in that it incorporates a double center panel section **220**. This center panel is locked into position with a double channel locking channel **232**. Depending on the configuration desired locking channels **224** or **226** are utilized.

FIGS. **71** to **77** represent still another display device of this invention, this display is particularly advantageous in that when folded up it forms its own brief case. Display **234** incorporates a handle section **235** which is locked in place with a U shaped channel **236**. It can be seen that handle section **235** consist of a pair of opposing halves **235***a* and **235***b*. Once these halves are open they are folded down upon display panels **238** and **239**. Display **234** may then be assembled in a manner which is analgous to the description given above in connection with FIGS. **6**, **7**, and **8** using channel **236** as the locking channel. It should be noted that once the display is assembled the handle section **235** is concealed out of sight between display panels **238** and **239**.

As is illustrated in detail in FIG. **77** the one-half of handle section **235***a* is pivotely attached to display panel **238** with hinge **240**. This pivotal attachment can be effected by a variety of means. It is preferred that hinge **240** be formed by sheet material **241** which is overlaid over display panel **238** and handle section **235***a*. In accordance with the preferred aspects of this invention sheet material **241** has a decorative finish in such a fashion that a decorative finish is imparted to display **234** in toto.

From the above description it can be seen that display **234** is particularly advantageous in that it can be carried around as a brief case and yet set up to form a display in a short period of time.

From the above description it can be seen that by using the hinge section concept it is possible to produce an almost endless variety of displays. While a large number of displays are illustrated in FIGS. **40** to **77** it is understood by one skilled in the art that this invention is not limited to these illustrated embodiments.

What is claimed is:

1. A display device comprising a composite hinge section having at least three elongated members which are pivotally connected, a pair of opposing display panels attached to each elongated member, all adjacent display panels attached to adjacent elongated members, being attached to each other, all of said display panels being locked into a stressed relationship with each other when the non adjacent end display panels are rotated into an abutting position with each other.

2. The display device of claim **1** wherein said elongated members consist of channels having a U shaped cross section, which are adapted to receive the edges of said display panels.

3. The display device of claim **2** wherein said channels having a U shaped cross section further incorporate inwardly facing lips which engage the display panel.

4. The display device of claim **1** wherein said elongated members are pivotally connected by means of sheet materials which is attached thereto.

5. The display device of claim **4** wherein said sheet material is an adhesive backed tape.

6. The display device of claim **1** wherein said display panels incorporate a plurality of scores which are adapted to engage said elongated members.

7. The display device of claim **6** wherein said elongated members consist of channels having a U shaped cross section and further incorporate inwardly facing lips which engage the display panel, and wherein said U shaped channels are pivotally connected by means of sheet material which is attached thereto.

8. The display device of claim **1** wherein said display device is rotatably attached to a base section.

9. The display device of claim **1** wherein all said display panels are attached to each other by the outermost edges of said adjacent display panels which are parallel to the axis of said composite hinge section.

10. The display device of claim **7** wherein said display panel is formed from a paper-foam plastic composite material.

* * * * *