Jan. 28, 1958 J. S. CHASE 2,821,190

CATHETERIZING ENDOSCOPE

Filed April 20, 1956

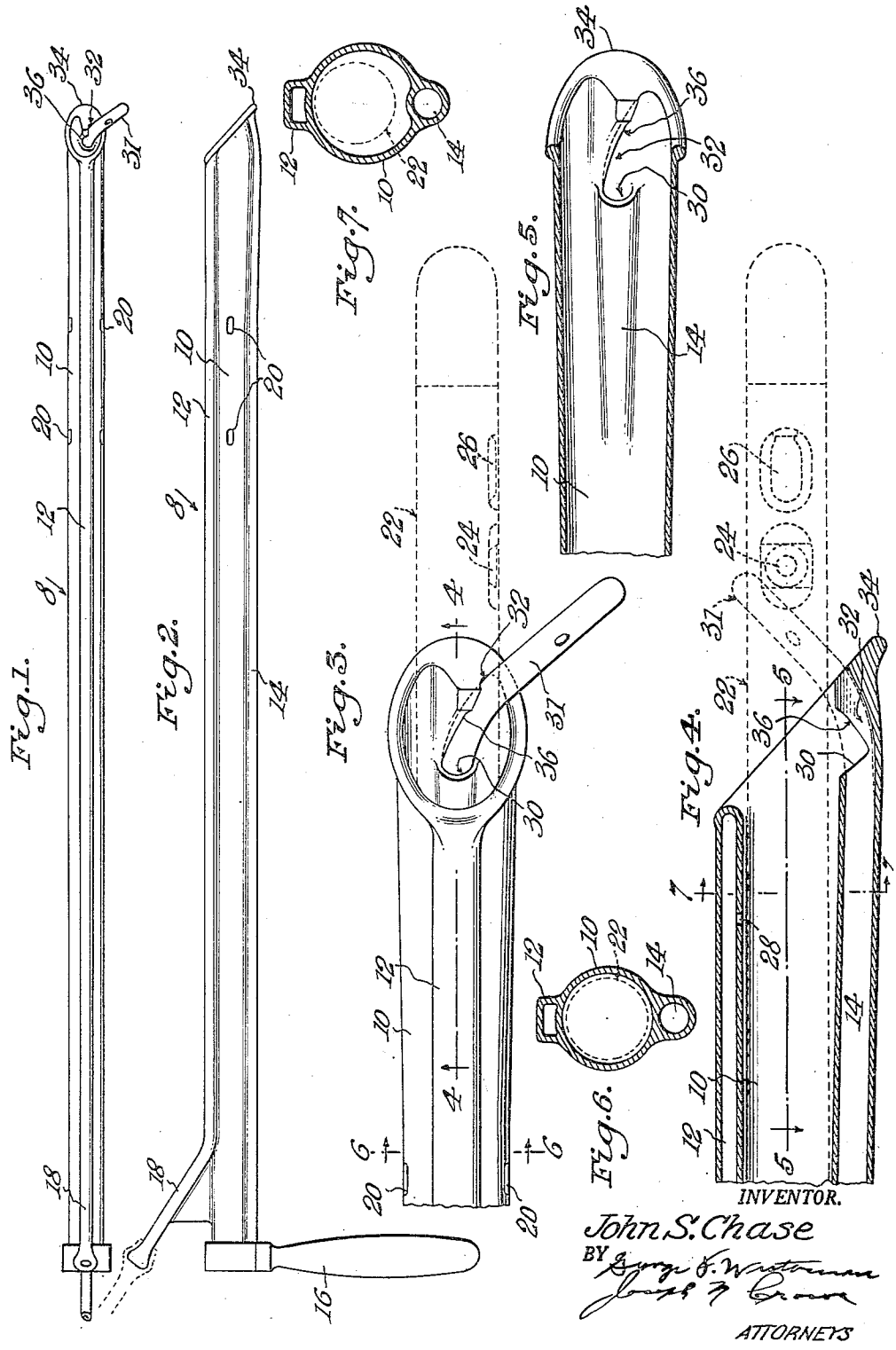

United States Patent Office 2,821,190 Patented Jan. 28, 1958

2,821,190

CATHETERIZING ENDOSCOPE

John S. Chase, San Fernando, Calif.

Application April 20, 1956, Serial No. 579,697

4 Claims. (Cl. 128—6)

(Granted under Title 35, U. S. Code (1952), sec. 266)

The invention described herein may be manufactured and used by or for the Government for governmental purposes without the payment of any royalty thereon.

The present invention relates to endoscopic instruments for the inspection and catheterization of body cavities and more particularly to an improved type of catheterizing endoscope embodying an improved means for the manipulation and control of its catheter. Still more particularly the present invention provides certain improvements in the construction of a catheterizing bronchoscope wherein there are embodied improvements enabling a catheter tube and illuminating telescope to be inserted into the pulmonary bronchae of an individual to illuminate and facilitate bronchoscopic exploration and treatment thereof.

It is a general object of the invention to provide a means for directly manually controlling, manipulating, and guiding a catheter employed in combination with an endoscopic instrument.

Another object of the invention is to provide a greatly simplified means for directing and controlling a catheter used in conjunction with an endoscope which does not require the employment of complex and bulky equipment with the endoscope in order to obtain a wide range or field of catheter control operation.

Another object of the invention is to provide a bronchoscope embodying a catheter, an illuminated telescope, and means for controlling and directing the position of the catheter within the bronchial tree of a patient without increasing the total size or complexity of the bronchoscope.

A further object of the invention is to provide a catheterizing endoscope embodying a means integral with its distal end to guide, direct, and deflect the end portions of the catheter at a desired angle from the body of the endoscope, the means also partially surrounding the catheter to hold it in the desired position relative to the body of the endoscope and to maintain it in its relative position with the body of the endoscope when the endoscope is rotated or displaced upward or downward by handle means attached to its viewing end, thus obviating the necessity of removing and reinserting the catheter each time the scope is moved in relation to the cavity or bronchus being examined.

A still further object of the invention lies in providing an assembly of an illuminating telescope, endoscope, and flexible catheter in which the problem of quickly and efficiently guiding the catheter into the field of vision and desired point of operation is accomplished by means of a simple structure and design integral with the distal end of the endoscope, and making possible direct, trouble-free, manual manipulation and control of the catheter within a body cavity or bronchial tree.

Broadly described, the endoscope having the aforementioned features incorporates an elongated tube provided with a plurality of passages including a large central passage and a catheterizing passage which contains a flexible catheter tube. The distal end of the elongated tube is angled to permit easy insertion and the obtaining of a larger field of observation, and is provided with means adjacent to the distal opening of the catheter containing passage to engage, deflect, and direct the catheter to a desired location for operation and at a selected angle with the elongated tube.

Further objects and a more thorough understanding of the invention may be obtained by reference to the following description and claims taken in conjunction with the accompanying drawings which disclose an illustrative embodiment of the construction forming the basis of the invention and in which—

Fig. 1 is a plan view of one embodiment of the catheterizing endoscope illustrated as a bronchoscope;

Fig. 2 is a side elevation of the bronchoscope;

Fig. 3 is a detailed plan view of the distal end of the bronchoscope showing the arrangement of the catheter in the guide means, the illuminating telescope being depicted in broken lines;

Fig. 4 is a longitudinal section taken along the line 4—4 of Fig. 3;

Fig. 5 is a horizontal section taken along the line 5—5 of Fig. 3;

Fig. 6 is a vertical section taken along the line 6—6 of Fig. 3; and

Fig. 7 is a vertical section taken along the line 7—7 of Fig. 4.

In accordance with the invention, endoscopic means are provided for insertion into a body cavity to permit its inspection and catheterization. In the present preferred embodiment of the invention, such means comprises an elongated tube assembly or scope 8 (Figs. 1 and 2) having a plurality of passages to provide means for the quick and efficient insertion and withdrawal of various instruments into the cavity of the body which is to be examined, treated, or catheterized.

As embodied, said scope 8 (Figs. 1 and 2) comprises a large central tube 10, an evacuation tube 12, parallel to and extending along the large central tube, and a catheter-enclosing tube 14 also parallel to and extending along the central tube but on a diametrically opposite side of the central tube from the evacuation tube 12. The evacuation and catheter-enclosing tubes 12 and 14 have walls integral with the wall of the central tube 10; however, the passages formed by the evacuation and catheter-enclosing tubes 12 and 14 are completely separate and distinct from the passage formed by the central tube 10 except that they are joined to it by openings (to be described below) at the distal end of the scope 8. A handle 16 is mounted on the viewing end of the scope 8 to provide holding means both for insertion of the scope into a body cavity and for rotation, displacement, and translation of the scope after insertion. Formed air openings 20 are provided in the side wall of the central tube 10 to permit that tube to serve as a breathing as well as a working passage.

The distal end of the scope 8 is angled and provided with built-up smooth rounded edges in order to permit easy insertion of the scope into a body cavity and a wide field of observation after insertion (Fig. 3). In operation of the scope 8, an illuminating telescope 22 is inserted through the central tube 10 until it projects into the cavity to be examined; the central tube 10 of the scope 8 and the telescope 22 are constructed so that clearance is provided between the wall of the tube 10 and the telescope sufficient to permit the tube 10 to continue to function as a breathing passage after the telescope has been inserted. The illuminating telescope 22 comprises a right angle viewing telescope having an objective 24 at its distal end and an illuminating light source 26 im-

mediately adjacent to the objective. The evacuation tube 12 is connected to the central tube 10 at its distal end through a port 28, and the catheter enclosing tube 14 terminates by an opening 30 into the central tube at a point slightly above the extreme distal end of the central tube 10 but low enough in the large tube that the opening 30 is visible when the angled end of the scope is viewed from above. A catheter 31 is inserted in the catheter enclosing tube 14 after the scope 8 has been inserted in the body cavity until the inserted end of the catheter 31 protrudes through the opening 30 (Fig. 3). When designed for use as a bronchoscope, the evacuation tube 12 includes an extension 18 at the viewing end to which a vacuum pump may be attached for the removal of edematose liquid from the lung cavity by drawing it through the port 28 and up the evacuation tube 14 to prevent interference with vision and manipulation of the catheter 31. Should it be necessary to supply oxygen to the patient being examined, an oxygen source can be attached to the extension 18 of the evacuation tube 12.

In conformance with the invention, means are provided to permit accurate control, manipulation, direction, and guidance of the catheter 31 to any desired location in the body cavity being examined. In the illustrated preferred embodiment of the invention, such means comprise a specially formed guide which partially surrounds the catheter 31, holds it at a selected angle of deflection with the scope 8, and permits guidance of the end portions of the catheter over a wide range within the body cavity by rotation and displacement of the scope relative to the body cavity and direct manual manipulation of the catheter 31 from the viewing end of the scope.

As embodied, said means for guiding, directing, and holding the catheter 31 comprise an arcuate rounded channel 32 integral with and formed from the inside surface of the distal end of the scope 8. The channel 32 extends from immediately below the opening 30, continues downward and toward one side of the distal end of the scope 8, and terminates at one side of and slightly above the tip 34 of the distal end of the scope. The said means also comprise a guide lip 36 extending along the length of the arcuate channel 32 on the side of the channel nearest to the central axis of the scope 8. Thus, the guide lip 36 partially encloses the arcuate channel 32 to a degree sufficient to encompass a portion of the circumference of the catheter 31 which after emerging at the opening 30, is held firmly in place and directed along the arcuate channel 32 by the guide lip 36 which folds partially around it. The arcuate channel 32 is designed and constructed so that it will hold the catheter 31 at the selected angle of deflection with the body of the scope 8 to place the end portion of the catheter 31 within the illuminated field of the telescope 22.

In operation, the scope 8 is inserted into the body cavity which is to be examined, treated, or catheterized, and the catheter 31 is inserted into the catheter-enclosing tube 14 until its end portion emerges at the opening 30 and extends slightly beyond the arcuate channel 32. The right angle illuminating telescope is inserted in the central tube 10 either before or after insertion of the catheter 31. After the telescope 22 and catheter 31 have both been inserted in the scope 8 they are mutually adjusted until the tip of the catheter may be seen in the illuminated field of view of the telescope. While observing the portion of the body cavity to be catheterized, the operator may position the scope 8 by its handle 16 to rotate, translate, or displace it until the catheter 31 is generally aimed at the desired location. The catheter 31 may then be directed to the spot selected for application with ease by either inserting or retracting it in the catheter-enclosing tube 14 and simultaneously making any necessary adjustments in the position of the scope 8 by means of the handle 16.

Thus, the present invention provides a catheterizing endoscope having specially designed means which conserves space, is simple in construction, trouble-free in operation, and permits extremely accurate and positive control, guidance, and direction of the catheter.

It is obvious that changes in the details of the embodiment described and illustrated for the purpose of explaining the nature of the present invention may be made by those skilled in the art without departing from the spirit and scope of the invention as expressed in the appended claims. It is therefore intended that these details be interpreted as illustrative, and not in a limiting sense.

Having thus described my invention and illustrated its use, what I claim as new and desire to secure by Letters Patent is:

1. An instrument for inspecting and catheterizing body cavities adapted to be used with a combination telescope and lighting tube, said instrument comprising a formed elongated longitudinal tube having a plurality of passages including a large central passage and a pair of small passages parallel to and positioned on the outer wall of and on diametrically opposite sides of the central passage, the elongated tube having a viewing end and a distal end, the distal end being angled for facilitating insertion of the assembly and observation within a body cavity, a flexible catheter tube inserted through one of the small passages and extending beyond its distal end, an arcuate channel located at the termination of the catheter-containing passage and formed in the distal end of the central tube to guide the catheter to one side of the tube, and a projecting lip integral with and partially surrounding the arcuate channel to hold the catheter in place, the arcuate channel and projecting lip acting to effect a desired angular deflection of the end portion of the catheter extending beyond the distal end of the tube to hold it within the confines of the arcuate channel, and to guide it in a desired direction.

2. An instrument for examining and catheterizing body cavities comprising a sheath having a plurality of passageways including a working passageway, an evacuation passageway, and a catheterizing passageway; the sheath having a viewing end and a distal end, the distal end of the sheath including an angled fenestra and embodying a tip at its lowest point, means for providing illuminated vision through the central passageway coextensive with the range of vision outside the fenestra, a flexible catheter inserted through the catheterizing passageway, the catheterizing passageway having an opening into the working passageway above the tip of the distal end of the sheath, an arcuate rounded channel integral with and formed from the inner wall of the working passageway, the channel commencing at the opening of the catheterizing passageway and curving to its termination at the side of the working passageway slightly above the tip of the distal end of the sheath, a rounded flange forming a partial continuation of the catheterizing passageway and integrally attached to and coextensive with one side of the arcuate channel, the flange engaging and holding the catheter to guide it and deflect it out of the fenestra and into the illuminated field of vision.

3. An endoscopic instrument for inspecting and catheterizing body cavities adapted to be used with a combination telescope and lighting tube, said instrument comprising an elongated central tube forming a working passage, an evacuation tube parallel to and integrally extending along the central tube, a catheter-containing tube parallel to and integrally extending along the central tube opposite from the evacuation tube, the resulting tube assembly having a viewing end and a distal end, the distal end having an angled taper and tip for facilitating insertion of the assembly into a body cavity, a flexible catheter inserted through the catheter-containing tube, the catheter-containing tube having an opening into the central tube above the tip of the distal end of the tube assembly, a curved groove in the inner wall of the central tube extending downward from the opening of the catheter-containing tube curving

away from the longitudinal axis and toward one side of the tube assembly and terminating slightly above the tip of the distal end, a curved protuberance forming a partial continuation of the catheter-containing tube integral with the curved groove and the inner wall of the central tube on the side of the groove adjacent to the longitudinal axis of the assembly to partially enfold the catheter and hold its end portion at a selected angle of deflection with the tube assembly whereby the end portion of the catheter projecting and extending beyond the distal end of the tube assembly may be guided and directed to an exact location in the cavity being examined.

4. A bronchoscopic instrument for examining and catheterizing lung cavities comprising an elongated central tube forming a working and breathing passage, a second tube forming an evacuation and oxygen passage parallel to and integrally extending along the central tube, a third tube forming a catheterizing passage parallel to and integrally extending along the central tube opposite from the second tube, the resulting tube assembly having a viewing end and a distal end, a handle attached at the viewing end, the distal end having an oblique fenestra and embodying a tip at its extremity, an illuminating telescope slidably extending through the central tube and commanding a field of vision coextensive with the range of vision outside the fenestra, the second tube having a port adjacent to its lower end and connecting it to the central tube, the third tube having an opening into the central tube above the tip of the distal end on the unfenestrated side of the tube, a flexible catheter inserted in the third tube, a curved groove integrally formed in the wall of the central tube extending laterally in a curve from the opening of the third tube to the edge of the central tube immediately above the tip of the distal end, and a built up projecting lip extending along the lower side of the curved groove to partially encompass the catheter and hold it in the curved groove.

References Cited in the file of this patent

UNITED STATES PATENTS

2,112,056	Wappler	Mar. 22, 1938
2,120,996	Wappler	June 21, 1938
2,129,391	Wappler	Sept. 6, 1938
2,243,992	Wappler	June 3, 1941