July 10, 1962 L. E. WALKUP 3,043,217

ELECTROSTATIC PRINTING APPARATUS

Filed Dec. 21, 1960 3 Sheets-Sheet 1

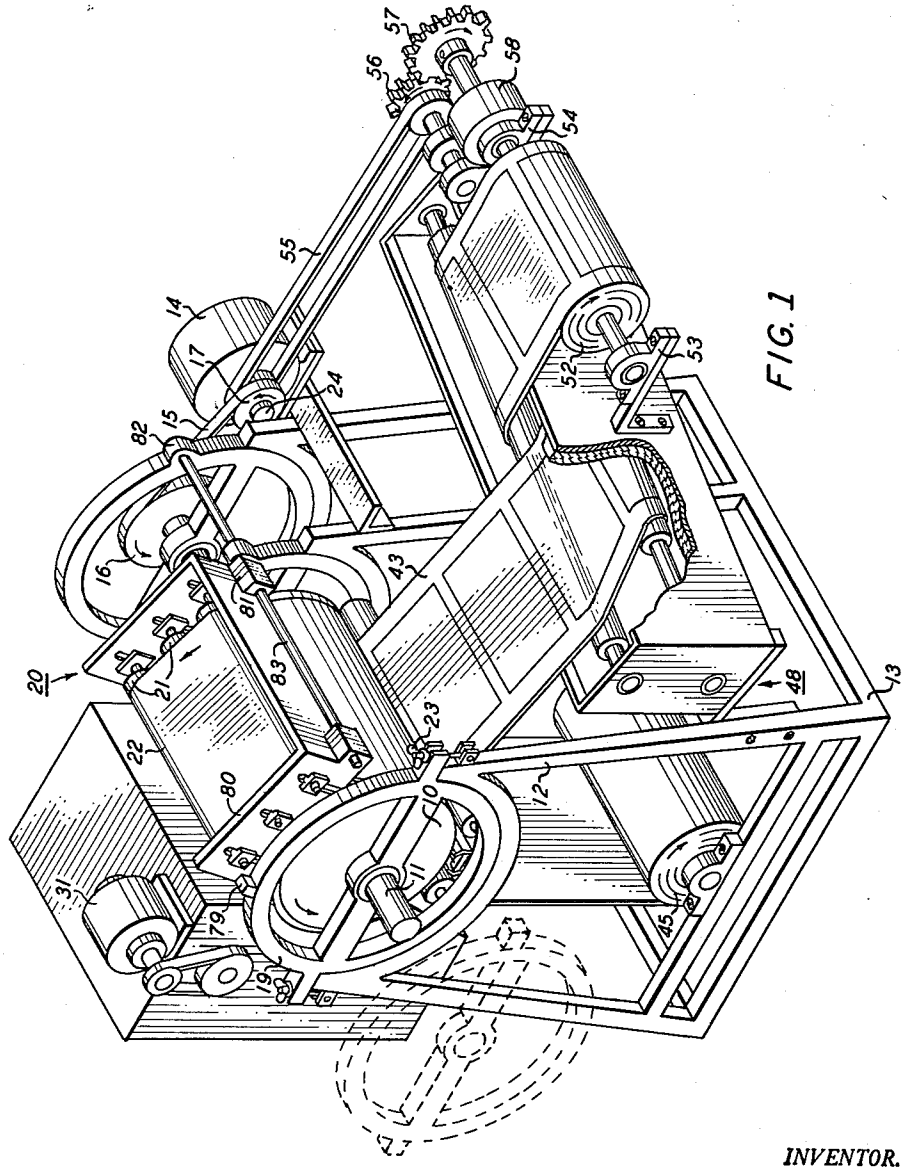

FIG. 1

INVENTOR.
LEWIS E. WALKUP

BY Daniel Rubin

ATTORNEY

July 10, 1962 L. E. WALKUP 3,043,217

ELECTROSTATIC PRINTING APPARATUS

Filed Dec. 21, 1960 3 Sheets-Sheet 2

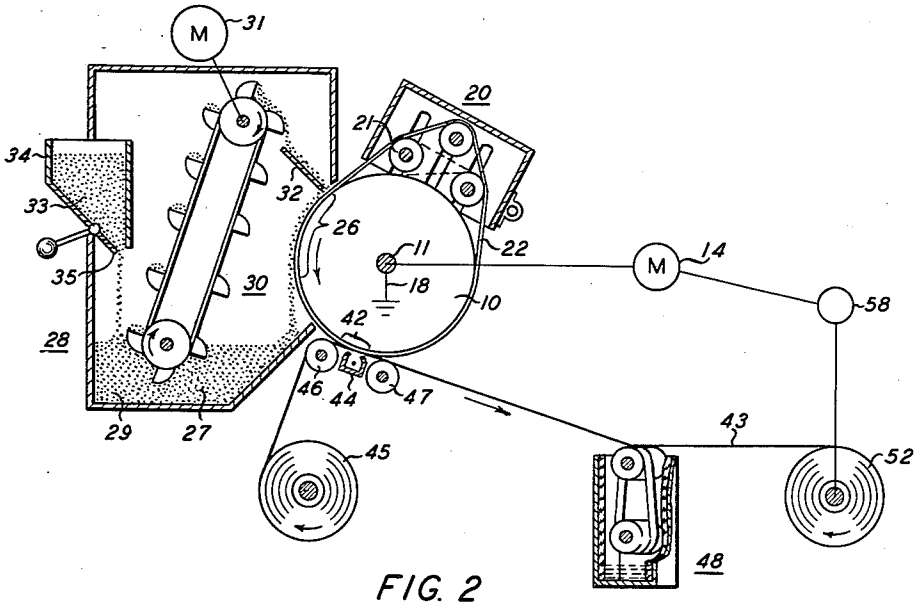

FIG. 2

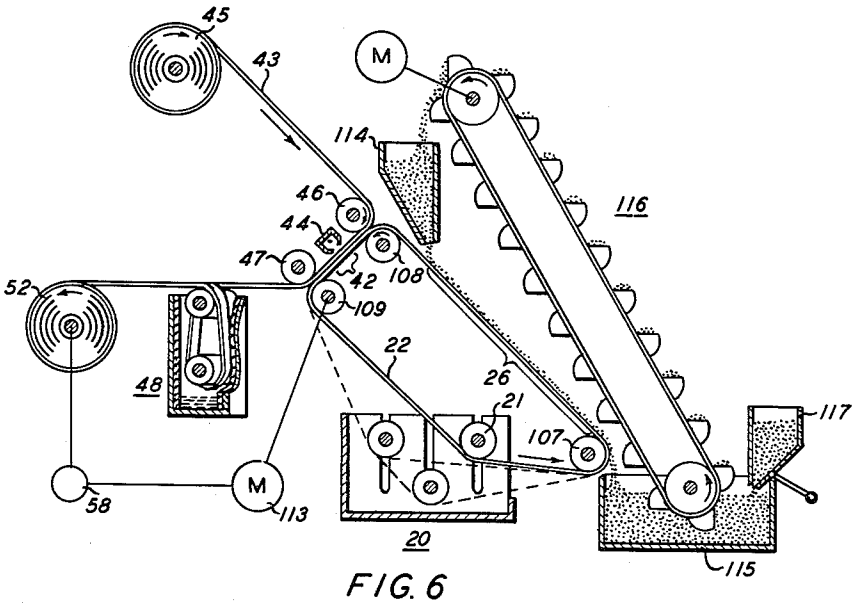

FIG. 6

INVENTOR.
LEWIS E. WALKUP
BY Daniel Rubin

ATTORNEY

July 10, 1962 L. E. WALKUP 3,043,217

ELECTROSTATIC PRINTING APPARATUS

Filed Dec. 21, 1960 3 Sheets-Sheet 3

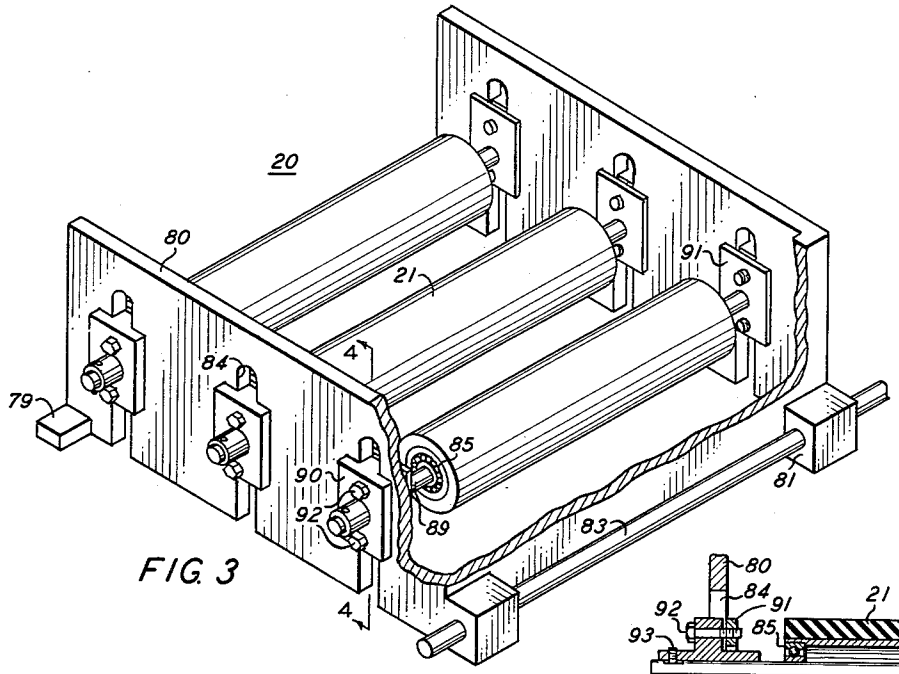

FIG. 3

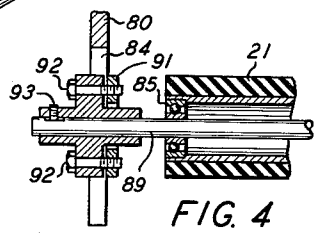

FIG. 4

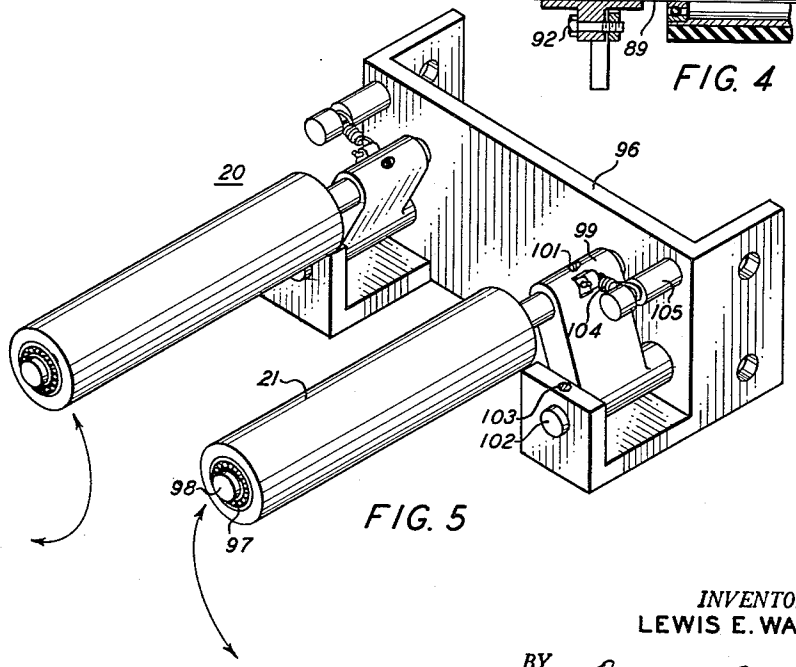

FIG. 5

INVENTOR.
LEWIS E. WALKUP

BY

ATTORNEY

United States Patent Office 3,043,217 Patented July 10, 1962

3,043,217

ELECTROSTATIC PRINTING APPARATUS

Lewis E. Walkup, Columbus, Ohio, assignor, by mesne assignments, to Xerox Corporation, a corporation of New York

Filed Dec. 21, 1960, Ser. No. 77,339
2 Claims. (Cl. 101—212)

This invention relates to improvements in xerographic printing and more particularly to improved method and apparatus for electrostatic printing of multiple image sizes.

In Schaffert patent U.S. 2,576,047 there is disclosed electrostatic printing, commonly referred to as "xeroprinting," in which an image or images of an electrostically charged permanent insulating pattern is developed with a granulated powder by electrostatic deposition, and the developed image transferred to a transfer material. In general, xeroprinting is used to produce a relatively large number of copies of a single image and employs a printing plate that consists of a permanent image, in the form of an electrically insulating or non-conductive pattern in conjunction with metal or other conductive material. The conductor, usually as a backing plate, is suitably grounded and may be either rigid or flexible and mounted to be continually advanced past the appropriate stations for developing and transferring.

Since documentary and other images vary in size, any printing plate as a minimum should have sufficient length to contain the pattern and should preferably be an exact multiple of an individual image length. Printing apparatus of the prior art are limited to a fixed standard size of printing plate, the size of which is determined by experience to be economically optimum for the size of image reproduction most frequently encountered. This obviously restricts the use of the apparatus in that plates of longer than standard size cannot be accommodated, whereas a standard size plate is required for an image consuming less than, and even substantially less than, the entire plate length.

The plate image is developed and transferred to a transfer material on which the developed image is permanently affixed, and which for the purpose of this invention is a continuous web, preferably of paper. The transfer material is advanced at identically the same rate as the printing plate and contacts the plate at a transfer station to be described below.

In the process of xeroprinting, as in any continuous printing operation with a large reproduction volume, considerable length and a correspondingly large volume of transfer material is consumed. Since it is well known in the printing art that the cost of paper represents a substantial portion of the manufacturing cost of printed copy, frequently running approximately fifty percent thereof, it is most desirable to keep paper cost to a minimum by minimizing waste. Since waste is comprised of unused portions of transfer material, it should be apparent that in the instance of a plate having considerably more length than the image thereon, there will occur, with a continuously advancing paper web, a considerable waste thereof comprised of extensive lengths of blank areas between the printed portions thereon. The blank areas, except for borders required for the printed image, constitute waste that is substantially proportional to the non-image length of the printing plate.

Whereas waste is a high cost factor, at the same time, the cost of printing apparatus is very substantial and it is regarded as economically undesirable to have available a different size printing apparatus for each size of printing plate. In conventional printing presses, for example, utilizing rigid plates, close operating tolerances and very

heavy printing pressures limit feasibility of more than one size plate.

From the foregoing it should be apparent that in commercially competitive situations, printing apparatus able to accommodate only a fixed size plate is a decided disadvantage.

Accordingly, it is the principal object of the invention to provide improved apparatus and methods for electrostatic printing of multiple image sizes.

It is a further object of the invention to provide improved xerographic printing machines whereby a machine is adapted to accommodate selective lengths of flexible printing plates.

These and additional objects of the invention are attained according to the present invention as illustrated in one embodiment comprised of a plurality of rollers several of which define a path of travel past main operating positions of the printing apparatus. Plates of different lengths are threaded over a selective number of rollers as is required to take-up slack created by the individual plate length.

Several embodiments of the invention are illustrated in the following drawings in which:

FIG. 1 is an isometric view of an electrostatic printer incorporating the apparatus of the invention;

FIG. 2 is a schematic side elevation, partly in section, of an electrostatic printer incorporating the apparatus of the invention;

FIG. 3 is an isometric view of one embodiment of the plate support of the invention;

FIG. 4 is a sectional view taken substantially on line 4—4 of FIG. 3;

FIG. 5 is an isometric view of a second embodiment of the invention; and

FIG. 6 is a schematic illustration of a third embodiment of the invention.

Illustrated in FIGS. 1 and 2, is apparatus according of one embodiment of the invention including a printing plate support **10** illustrated in the form of a drum or cylinder. The drum is suitably mounted on a shaft **11** supported and arranged to rotate in a frame **12** mounted on a base **13**. The shaft **11** and drum **10** are driven counterclockwise from an electric motor **14** through a belt **15** connected to pulleys **16** and **17** connected respectively to shaft **11** and the motor shaft **24** and are selected with the appropriate ratio of pitch diameters to turn the drum at the desired rate of rotation. Conductor **18** suitably grounds the drum.

Frame **12** includes a journaled support **19** held to the frame by means of a pair of thumb locks **23**. By loosening the thumb locks and swinging them outwardly, support **19** can be withdrawn from shaft **11**, as shown dashed, whereby one end of the drum is rendered accessible for the purpose of installing thereover an endless printing plate to be described.

Spaced from the plate support **10** is the plate support generally designated **20**, that includes a plurality of roller cylinders **21** and which is to be described below.

Adapted to be mounted over both plate supports, in the manner to be described, is a printing element or plate **22** that, for the purpose of this invention, may comprise a flexible material formed as an endless belt by seaming or the like. The printing plate may be made by any of several different methods as, for example, writing or tracing the desired design or subject on a metal plate with an insulating or non-conducting lacquer or paint and other methods known in the art. The electrically conductive backing or support lies against a support therefor, and the image layer continuously receives successive electrostatic charges from the transfer operation to be described:

As the plate advances, the electrostatically charged

image passes through a developing station **26** in which a two-component developing material **27**, which may be of the type disclosed in Walkup patent U.S. 2,618,551 is cascaded over the drum surface. In the developing apparatus as disclosed in FIGS. 1 and 2, developing material is elevated from sump **29** by conveyor **30** which is driven by suitable drive means from motor **31**, and then is released onto chute **32** wherefrom it cascades down over the plate surface. Toner component **33**, of the developer, and consumed in developing, is stored in dispenser **34** and is released in amounts controlled by gate **35**.

As an alternative to cascade developing apparatus **28**, other forms of developing apparatus known in the art could be substituted therefor, as for example, a form of brush development disclosed in French Patent 2,120,534, magnetic brush development disclosed in Young patent U.S. 2,786,441, liquid development disclosed in British Patent 755,486 or others achieving the appropriate result as aforesaid.

After development, the powder image passes through an image transfer station **42** at which the powder image is transferred to a web of traveling transfer material **43**, for example, as disclosed in Schaffert patent U.S. 2,576,-047.

The transfer material to which the powder image is transferred may be of any convenient type, such as paper, which is obtained from a supply roll **45**, fed over guide rolls **46** and **47**, being directed into surface contact with the plate in the immediate vicinity of transfer corona generating device **44**. After transfer, the transfer material is separated from the plate surface and, as described in the above-cited Schaffert patent, recharges the plate image for indefinite operation of successive cycles. Thereafter, the transfer material is guided through a fusing apparatus, generally designated **48**, which may be of a solvent vapor type such as disclosed in Carlson patent U.S. 2,776,907, and wherein the powder image is passed through a chamber of solvent vapor which permanently affixes the image to the transfer material. Thereafter, the transfer material may be fed over a further system of guide and tensioning rolls and onto a take-up roll **52** mounted for rotation in bearing blocks **53** and **54** and driven by motor **14** through belt **55**, through idler gears **56** and **57** and slip clutch **58** that controls the paper take-up rate at the same lineal rate as the advancing rate of the printing plate.

Whereas other forms of fusing may be employed, vapor fusing is presently preferred. However, other fusing apparatus, such as those utilizing heat, as disclosed in Crumrine et al. patent U.S. 2,852,651, may be employed in the alternative.

By apparatus thus far described copy is produced from a printing plate comprised of a permanent insulating layer on a conductive backing, the image layer of which is electrostatically charged by charge retention from the transfer operation. However, in the alternative or in addition thereto, a charging apparatus (not shown) may be employed to apply charge to the insulating image layer. As the plate advances the charged image is developed with an oppositely charged developing material that is deposited on the image layer to form a xerographic powder image. The powder image is then electrostatically transferred to a transfer material to which it may be affixed by a suitable fusing device, whereby the powder image is caused permanently to adhere to the transfer material.

Referring to FIGS. 1, 3 and 4 there is disclosed a plate support unit **20** of the invention whereby variable length of printing plate can be accommodated in a printing machine. The plate support includes a frame support **80** adapted to be pivotally mounted on frame **13** by means of brackets **81** and **82** through which there extends a pivot rod **83**. To support the frame in operative position there is provided a stop **79** that rests on the perimeter of journal support **19**. In the side walls of the frame there are a plurality of slots **84** that are aligned in opposite side walls and open at the bottom. Each pair of opposite slots is intended to accommodate the support for a cylindrical roller **21** whereby each roller may be moved to change its spacing relative to plate support drum **10**.

Each roller, which may be of steel or have a peripheral rubber coating or the like for increased traction, is supported on a pair of bearings **85** having their inner race mounted on a stationary shaft **89** that extends outward of slots **84**. To support the roller at any desired height within the slots there is provided a clamp support comprising an outer plate **90** and an inner plate **91** held together and drawn tight to the frame by means of bolts **92**. On each side of outer plate **90** is a shaft-supporting boss, one of which contains a set-screw **93** seated in a flat of shaft **89** whereby lateral and rotational movement thereof is prevented.

For the purpose of illustration, three rollers are indicated although any reasonable number may be provided. To install a printing plate the frame is preferably tilted backward about rod **83** and as many rollers as are required to take-up slack of the printing plate are removed from the frame through the bottom opening of their respective slots. An endless printing plate is first inserted over the end of drum **10**, rendered accessible by removing journal support **19** as aforesaid, and is then slipped over the rollers, after which the frame is brought forward and the rollers raised within the slots until the printing plate is adequately taut, at which time bolts **92** are tightened to secure the roller position. The various plate travel paths through plate support **20** are noted in FIG. 2 wherein for the longest path the plate is indicated in solid outline, and alternative paths are indicated in dashed lines.

Referring to FIG. 5, another embodiment of the invention is illustrated wherein a frame **96** is adapted for mounting on a printing apparatus at a fixed spacing relative to a drum **10**, as shown in FIG. 1. As in FIG. 3, any feasible number of cylinder rollers **21** are included which are supported on a pair of bearings **97**, each having its inner race secured to a stationary shaft **98** cantilevered from pivoted bracket **99**. A set-screw **101** secures the shaft within the bracket.

Each bracket **99** is supported on a pin **102** extending horizontally through a channel section of the frame and secured against lateral movement by a set-screw **103** extending into a peripheral recess (not shown) of the pin. Each bracket is continually urged to its uppermost position by means of a tensioned spring **104** secured to the bracket at one end, and at the other end mounted on a stationary pin **105** extending from and secured to the frame. By this means, any number of rollers as are required to take-up slack in the printing plate can be manually depressed toward the plate support **10** of the printing apparatus by pivoting bracket **99** downward in the direction indicated by the arrows and the printing plate slipped over the unsupported end of the depressed roller or rollers. Releasing the rollers permits spring **104** to urge the rollers upward until the plate slack is taken up and the plate is retained taut on the rollers over which it is to move.

Each of the plate supports illustrated in FIGS. 3 and 5 is completely flexible to accommodate, in combination with the plate support **10**, a wide range of plate lengths. It is contemplated that drum **10** will have a smaller periphery than the maximum length of plate to be utilized and that at least one roller of apparatus **20** will always be required to take-up slack and maintain the plate under tension or reasonably taut. Obviously, in existing machines, replacement of the plate support therein with one of smaller size would be optional.

In FIG. 6, a third embodiment of the invention is schematically illustrated. The embodiment thereof comprises a plurality of rollers, several of which define a path of travel past main operating positions. An electrostatic printing plate **22**, of the aforementioned type is supported for movement on rollers **107, 108** and **109** and on additional rollers **21** of plate support unit **20** as are required to take up slack for an individual plate length. As in the previous embodiments, a motor herein designated **113**, is operative to move web **43** and plate **22** at identical rates. As the plate advances, it moves past developing station **26** at which developing material descends from hopper **114** thereover into a suitable receiving bin **115** from which the developing material is returned to the hopper by a suitable conveying means designated **116**. A suitable toner dispenser **117** may also be provided.

Electrostatic transfer of the powder image formed in developing is effected at transfer station **42** by means of corona generating device **44**.

Three rollers **21** are illustrated and as above are typical as to the number of rollers that may be required, although any feasible number of rollers may be supported in an adjustable manner, similarly as described and illustrated in FIGS. 3, 4 and 5. The apparatus may be suitably adapted for an assembly mounting specifically as required.

Since documentary and other images to be reproduced vary in size, a printing plate bearing the image pattern must have sufficient length to accommodate the entire pattern or repeated patterns and preferably should have a minimum of excess length thereover. It should be apparent therefore that there are no real limits to which the length of plate can extend.

Whereas the invention is directed primarily for use in conjunction with electrostatic printers of the xeroprinting type, it is not the intention to restrict the invention thereto but it is intended also to encompass printing by means of xerography, for example, as disclosed in Carlson Patent 2,297,691 and related art.

Since many changes could be made in the above construction and many apparently widely different embodiments of this invention could be made without departing from the scope thereof, it is intended that all matter contained in the drawings shall be interpreted as illustrative and not in a limiting sense.

What is claimed is:

1. In a xeroprinting apparatus in which images are reproduced from an endless flexible printing plate containing an image pattern comprised of configured insulating material on a conductive support, wherein the said apparatus includes a rotatable first support means adapted to advance a printing plate into operative relation past a plurality of treating stations, said treating stations including a charging station at which the printing plate receives an electrostatic charge that is retained by the insulating material thereon, a developing station at which electroscopic marking particles are presented to the charged insulating material on the plate to effect its development, and a transfer station at which developer on the insulating material is transferred to a moving support web arriving at said transfer station in face-to-face relation with the developed pattern on said plate; the improvement comprising a second support means adapted in cooperation with said first support means to receive and support endless, flexible printing plates of at least

two different dimensional lengths, said second support means comprising:

(*a*) a stationary frame disposed spaced from said first support means, said frame having two parallel opposite walls spaced apart at least the width of a printing plate to be supported;

(*b*) a plurality of aligned elongated slots defined in said opposite walls of said frame, each of said slots being arranged with one end opening into the edge of said walls;

(*c*) a plurality of cylindrical rollers each adapted to support a portion of printing plate to be advanced thereover;

(*d*) mounting means to mount each of said rollers for rotation in oppositely aligned of said slots and removable through the open ends thereof; and,

(*e*) securement means adapted to secure each roller relatively in its slot at a position at which said rollers collectively support a printing plate in a taut relation to the portion of printing plate on said first support means.

2. In a xeroprinting apparatus in which images are reproduced from an endless flexible printing plate containing an image pattern comprised of configured insulating material on a conductive support, wherein the said apparatus includes a rotatable first support means adapted to advance a printing plate into operative relation past a plurality of treating stations, said treating stations including a charging station at which the printing plate receives an electrostatic charge that is retained by the insulating material thereon, a developing station at which electroscopic marking particles are presented to the charged insulating material on the plate to effect its development, and a transfer station at which developer on the insulating material is transferred to a moving support web arriving at said transfer station in face-to-face relation with the developed pattern on said plate; the improvement comprising a second support means adapted in cooperation with said first support means to receive and support endless, flexible printing plates of at least two different dimensional lengths, said second support means comprising:

(*a*) a stationary support frame disposed spaced from said first support means;

(*b*) a plurality of rotatable cylindrical rollers each adapted to support a portion of printing plate to be advanced thereover;

(*c*) a plurality of roller support means pivotally mounted on said frame and each adapted to support one of said rollers cantilevered from one end in position for rotation with the opposite end accessible for mounting a printing plate thereover; and,

(*d*) depressible resilient means connected between the frame and each of said support means to urge said rollers therein to a position tending away from said first support means whereby said rollers collectively support a printing plate continuously in a taut relation to a portion of said printing plate on said first support means.

References Cited in the file of this patent

UNITED STATES PATENTS

1,560,710	Meyer	Nov. 10, 1925
2,260,553	Boyd	Oct. 28, 1941
2,357,809	Carlson	Sept. 12, 1944
2,788,738	Wood	Apr. 16, 1957