Oct. 3, , 1944. A. H. BERGER ET AL 2,359,725

SHEET METAL DUCT

Filed July 21, 1941 3 Sheets-Sheet 1

Fig.1.

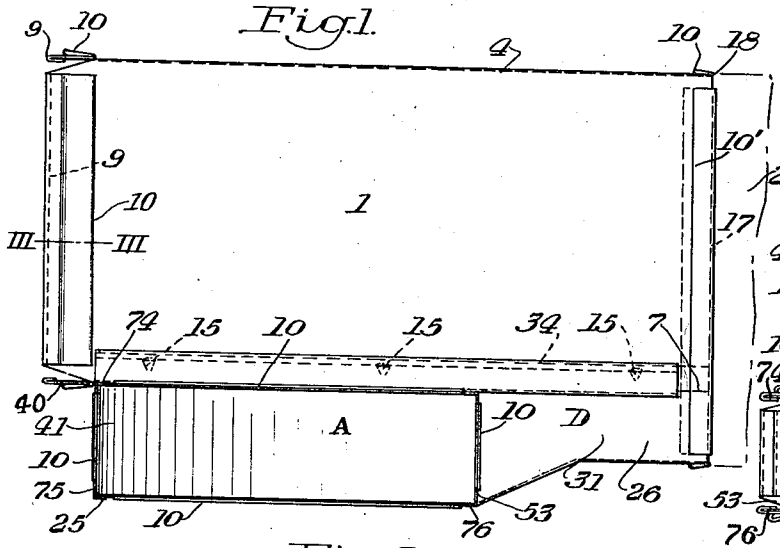

Fig.2.

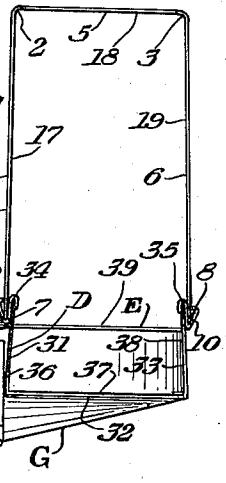

Fig.7.

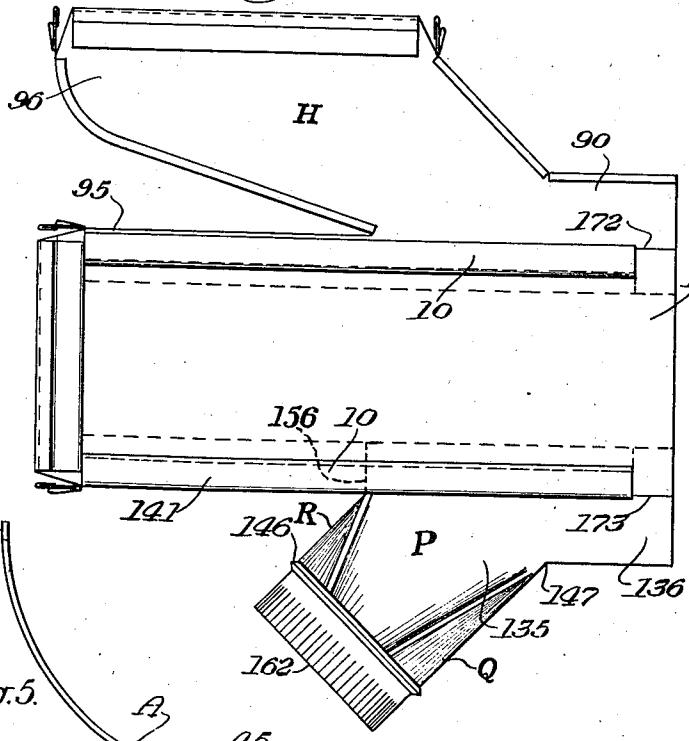

Fig.3.

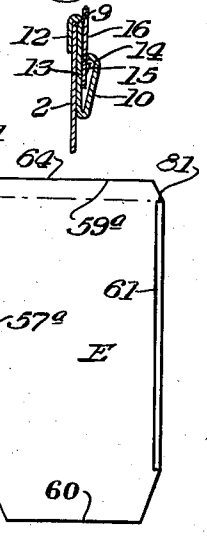

Fig.5.

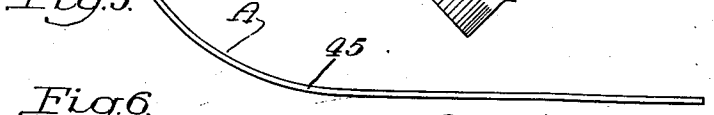

Fig.4.

Fig.6.

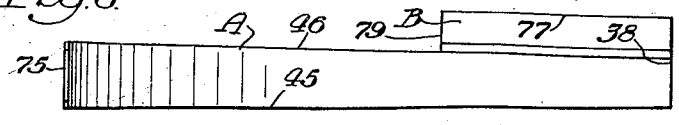

INVENTORS
ANDREW H. BERGER
ALLAN S. PINSKER
BY Lewis D. Konigsford
ATTORNEY

Oct. 3, , 1944. A. H. BERGER ET AL 2,359,725

SHEET METAL DUCT

Filed July 21, 1941 3 Sheets-Sheet 2

Fig.8.

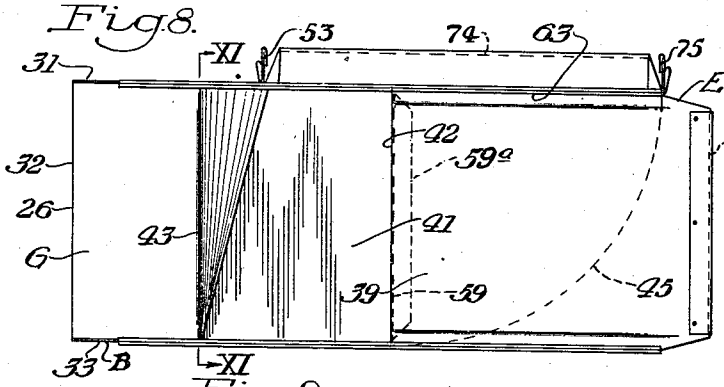

Fig.14.

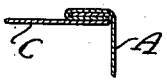

Fig.9.

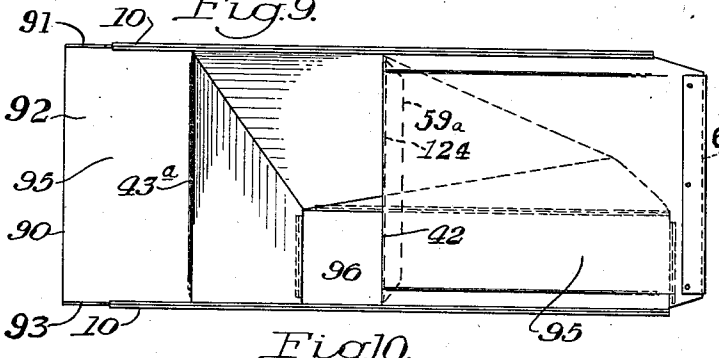

Fig.15.

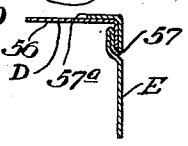

Fig.10.

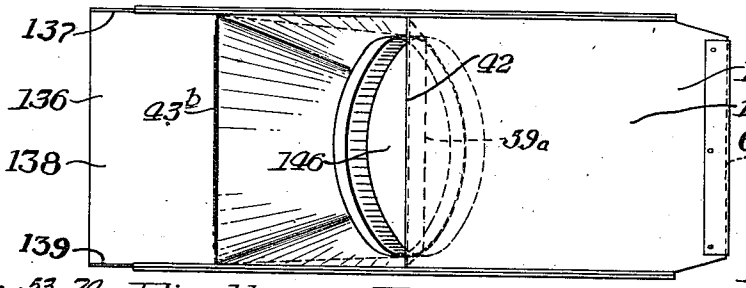

Fig.16.

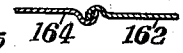

Fig.17.



Fig.11.

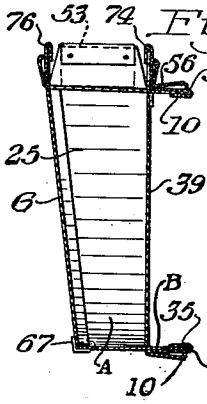

Fig.12.

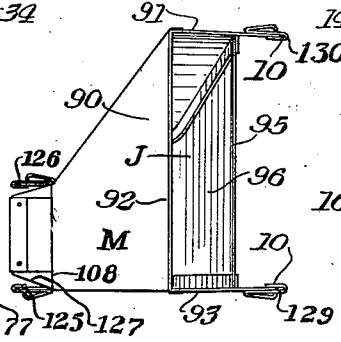

Fig.13.

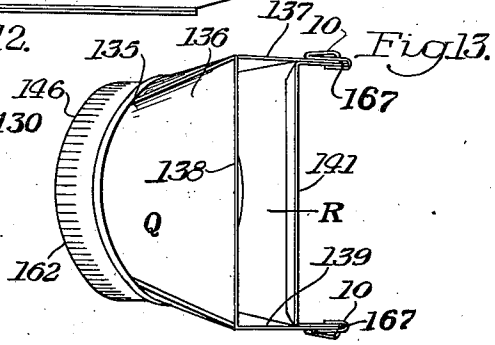

INVENTORS
ANDREW H. BERGER
ALLAN S. PINSKER
BY
Lewis D. Konigsford
ATTORNEY

Oct. 3, , 1944. A. H. BERGER ET AL 2,359,725

SHEET METAL DUCT

Filed July 21, 1941 3 Sheets-Sheet 3

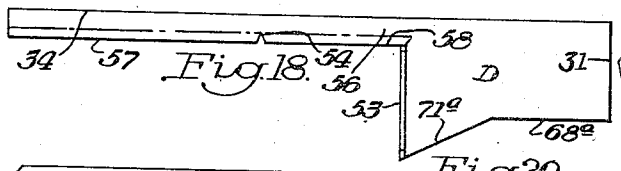

Fig. 18.

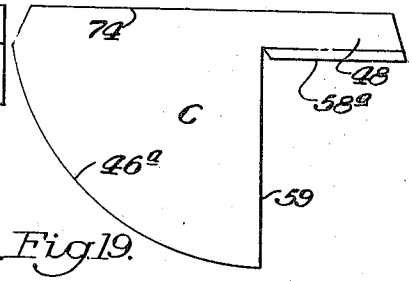

Fig. 19.

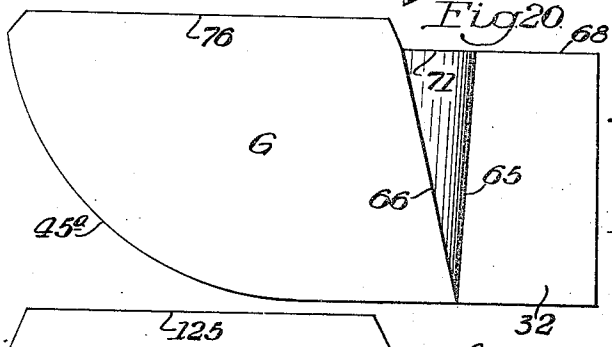

Fig. 20.

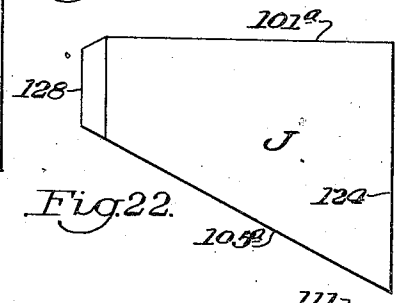

Fig. 22.

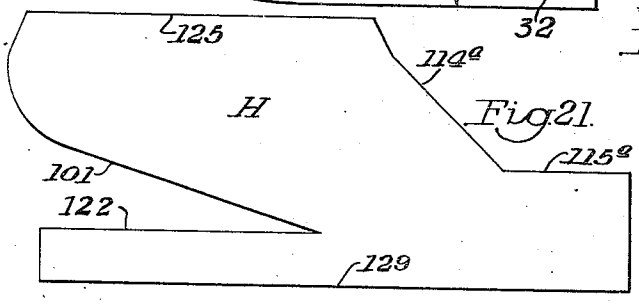

Fig. 21.

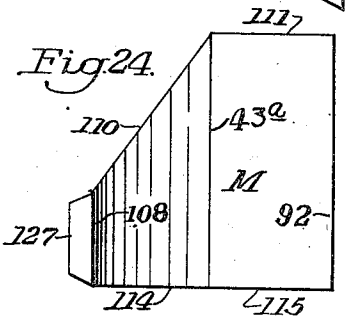

Fig. 24.

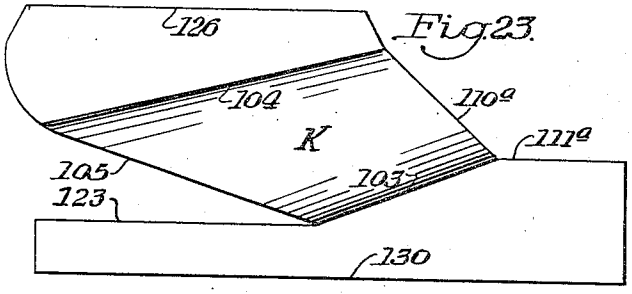

Fig. 23.

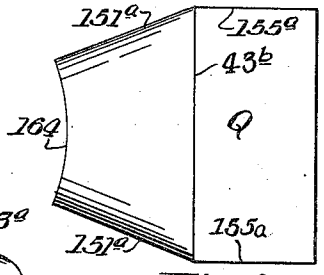

Fig. 26.

Fig. 27.

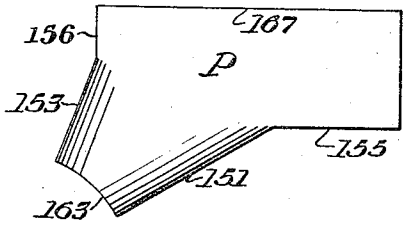

Fig. 25.

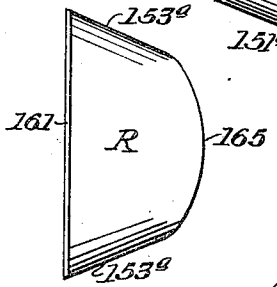

INVENTORS
ANDREW H. BERGER
ALLAN S. PINSKER.
BY
Lewis D. Konigsford
ATTORNEY

Patented Oct. 3, 1944

2,359,725

UNITED STATES PATENT OFFICE

2,359,725

SHEET METAL DUCT

Andrew H. Berger and Allan S. Pinsker, Pittsburgh, Pa., assignors to David Berger, Pittsburgh, Pa.

Application July 21, 1941, Serial No. 403,250

10 Claims. (Cl. 138—47)

This invention relates to improvements in sheet metal ducts, such as are employed for conveying heated, cooled or otherwise conditioned air.

In installing ducts for air conditioning lines in new buildings, as well as in old buildings, the location of beams and joists places a limitation on the space available for the ducts and fittings that must be used. Also, where many lines come off of a trunk line, it is necessary to increase the area of the trunk as the line approaches the source, to provide the capacity needed to supply the branch lines. It heretofore has been proposed to connect branch connections into the sides of the trunk line in such manner that the opening for the branch connection is at the side of the trunk, and thus avoid using excessively large ducts. However, such installations as heretofore proposed require cutting out the main or trunk duct at the installation to fit the branch connection thereto. This involves not only a waste of material, but the time of the workman to fit in the branch connection, as it actually requires some fabrication of the duct at the installation.

It is an object of the invention to provide a pre-fabricated reducing branch or take-off connection which may be installed without cutting either duct or connection at the installation.

Another object is to provide a prefabricated reducing branch take-off or connection that requires stocking only a small number of standard parts.

Another object is the provision of a sheet metal fitting which replaces the combination of a trunk increases, take-off and stack adapter heretofore employed in sheet metal duct work.

Another object is the provision of a sheet metal fitting which may be made with a minimum of waste material.

A further object is the provision of a separable takeoff connection and duct wherein either the duct or the takeoff connection may be replaced or substituted and which requires no cutting for the substitution.

A further object is the provision of a separable takeoff connection and duct which are interchangeable and require no fitting or cutting for installation.

A further object is the provision of interchangeable takeoff connections and ducts which, when combined, constitute a duct of sturdy construction which is not easily collapsed, and which may be separated to facilitate storage or transportation.

A further object is the provision of interchangeable ducts and takeoff connections which may be united by a snap lock connection.

A further object is the provision of interchangeable ducts and takeoff connections which may be assembled into a trunk line with greater speed than other types of fittings heretofore employed.

In the accompanying drawings, wherein preferred embodiments of the invention are illustrated by way of example,

Figure 1 shows a preferred embodiment of our invention comprising a channel and top takeoff,

Figure 2 is an end view of Figure 1 as viewed from the right,

Figure 3 is a section of a detail taken on line III—III of Figure 1,

Figure 4 is a layout of a detail,

Figures 5 and 6 are side and plan views respectively of a detail,

Figure 7 is a top view of a further modification of the invention,

Figure 8 is a side view of the top takeoff shown in Figure 1 looking downward as seen in Figure 1,

Figure 9 is an inverted side view of the side takeoff shown in Figure 7,

Figure 10 is a side view of the round side takeoff shown in Figure 7,

Figure 11 is a section taken on line XI—XI of Figure 8,

Figure 12 is an end view of Figure 9 as viewed from the left,

Figure 13 is an end view of Figure 10 as viewed from the left,

Figures 14, 15, 16 and 17 are sectional views illustrating types of joints employed for securing various parts together,

Figure 18 is a plan view of the throat detail of a top takeoff,

Figures 19 and 20 show the side cheeks of a top takeoff,

Figures 21, 22 and 23 show one cheek, the heel, and the other cheek respectively of a rectangular side takeoff in the relative positions shown in Fig. 12,

Figure 24 shows the throat portion of a rectangular side takeoff, and

Figures 25, 26 and 27 show the panels, throat portion and heel respectively of a round side takeoff.

Referring to the drawings, there is shown a channel member 1, preferably formed from one sheet of metal by bending along the edges 2 and 3 to provide panels 4, 5 and 6. The channel

member has edges 7 and 8 extending the length of the open side thereof, and the edges 9 at one one, which may be referred to as the outlet end, have suitable fastening means shown in the preferred embodiment as snap lock hooks 10 by which the channel can be secured to the next adjacent trunk duct section. As seen in Figure 3, the snap lock hooks, which are preformed before being attached, comprise a portion 12 bent over the edge 9, and a portion 13 bent back on itself and provided with a hook 14. The bent over portion 12 is applied to the edge 9 and is spot welded or otherwise suitably secured thereto and, in use, the hook 14 engages a punched up projection 15 of the adjacent duct wall 16 which overlaps the edge 9. The edges 17, 18 and 19 at the other end which may be considered the inlet end, are adapted to receive the snap lock hooks 10' of an adjacent trunk duct section 21.

The standard sheet metal ducts in general use have one dimension fixed at eight inches and the other cross sectional dimension may be varied in multiples of two inches. Thus, the dimensions of standard ducts will be eight by two inches, eight by four inches, eight by six inches, etc., up to any desired size, although sizes above eight by fourteen inches are not commonly encountered. It will be observed that the missing panel or open side of the channel 1 is a standard width, namely, eight inches. According to one feature of the invention, this channel is adapted to interchangeably receive any one of a number of types of takeoff ducts of varying sizes, as will hereinafter appear.

In Figure 1 there is shown a channel member 1 assembled with a duct of the type known as a top takeoff duct, designated generally by the numeral 25. This branch fitting or takeoff 25 comprises a necked channel portion 26 made up of the walls 31, 32 and 33, the wall 32 being the same width as the open side of channel 1, viz., eight inches wide, and the edges 34 and 35 of walls 31 and 33 extend the length of the open side of channel member 1 and may have suitable fastening means thereon, such as snap lock hooks 10, adapted to snap over the edges 7 and 8 of the channel member 1 so that walls 31 and 33 form a continuation of walls 4 and 6 of the channel member, while wall 32 completes the closing of the channel to form a duct which at the inlet is substantially the same dimensions as standard duct 21 connected thereto. The snap lock hooks 10' carried by the end of standard duct 21 snap over the edges 17, 18 and 19 of channel 1 and the forward edges 36, 37 and 38 of walls 31, 32 and 33 respectively to hold the sections assembled to form a conduit.

An intermediate wall 39 is provided suitably fastened to the sides of branch fitting 25 and is so located that it, together with the panels 4, 5 and 6 of the channel 1 at the inlet end form a reduced duct of substantially the same dimensions as the channel 1. The neck portion 26 provides a channel of any desired dimensions, for example 3¼ inches by twelve inches connecting with the adjacent trunk duct section 21 (Fig. 1), and the branch connection or outlet opening 41 enters this channel between the forward end 42 of intermediate wall 39 and the rearward edge 43 of neck portion 26, as more clearly shown in Figure 8.

In Figures 4, 5, 6 and 18 to 27 we show layouts of the various takeoff connections, no allowances being shown for seams excepting where notches are shown in the edges, it being understood the layouts are not to scale. The preferred construction of the line top takeoff 25 comprises a strip or heel A (Figure 6) having a sloping edge 45 and a straight edge 46, and the heel is suitably curved. A short narrow strip B is fastened along the straight edge 46 of strip A preferably by a groove seam as illustrated in Figure 17. I prefer to form the parts A and B of separate pieces to economize on material, although, if desired, they may be made of one piece. A cheek C (Figure 19) is cut out in the general shape of an L with a quadrant shaped portion having a curved edge 46a and an extension piece 48. A throat D (Figure 18) has its edge struck up at 53 (Figs. 1 and 18) and a notch 54 formed in one edge of an extension strip 56 divides that edge into sections 57 and 58, this notch being located at a position from edge 53 equal to the length of extension 48 of part C. The edge portion 58 of strip D now is struck up at a right angle on the dot and dash line and is fastened to the edge 58a of cheek C by a double seam, for example as illustrated in Figure 14 with the right end of strip 48 next to turned up edge 53 so that cheek C thus lies at right angles to strip 56, and heel A is suitably fastened along edge 46 to curved edge 46a of cheek C, with the end 75 adjacent upper edge 74 of the cheek and the strip B adjacent edge 59, preferably by a double seam.

Another sheet E (Figure 4) is bended at one side edge to form a struck up side edge 61 and is fastened along the side edge 57a to edge 57 of throat D by a "Pittsburgh" or hammered lock joint as shown in Figure 15 the sheet E thus lying adjacent cheek C with the end 60 extending beyond the curved edge thereof to form the edge 40 (Fig. 1). If desired, the bent up edge 61 may be made separate from sheet E and secured thereto in any suitable manner. The end edge 59a of sheet E now is folded inwardly over edge 59 of cheek C as shown in Figure 8 and sheets C and E are spot welded together. The offset cheek G (Figure 20) now is bent at lines 65 and 66 to provide an offset for a change in dimension and is fastened along edge 45a to edge 45 of heel A by a "Pittsburgh" lock joint, and along edges 68 and 71 to edge 68a and 71a of throat D by a double seam. The snap lock hooks then are secured to the edges 74 of cheek C, 53 of throat D, 75 of heel A and 76 of offset cheek G. One snap lock hook secured over edges 77 of strip B and over edge 61 of sheet E serves to re-enforce these strips and keep edges 79 and 81 in abutting relation. Thus the lower edge 35 (Fig. 2) is made up of edges 77 and 61. The other snap lock hook is secured along edge 34 of the extension of throat D. End edge 60 of sheet E also receives a snap lock hook so that when the takeoff is assembled to a channel member 1 the edge 60 complements the edges 9 thereof.

Other types of branch connections which may be employed are shown in Figures 7, 9, 10, 12 and 13. Referring to Figures 9 and 12, there is illustrated what is known as a rectangular side takeoff. This comprises a neck portion 90 of channel shape, the channel being formed by walls 91, 92 and 93 (Figure 12) which neck portion is adapted to co-operate with a channel member 1 in the same manner as neck 26 shown in Figures 1 and 2 to form the inlet end of a duct substantially as explained in connection with Figures 1 and 2. A wall 95, corresponding to

wall 39 of Figure 2, is adapted to cooperate with the duct 1 to provide a reduced duct at the outlet end and the branch connection opening 96 enters between forward edge 42 of wall 95 and bended edge or corner 43 of neck portion 90.

This rectangular side takeoff is made of a bottom cheek H (Figure 21) and a heel J (Figure 22) which are joined together at edges 101 and 101*a* at right angles by a "Pittsburgh" lock joint, the heel J being suitably curved to conform to curved edge 101. A top offset cheek K is bent at 103 and 104 to provide an offset for a change in dimension, and is joined along edge 105 to edge 105*a* of heel J by a "Pittsburgh" lock joint at right angles to cheek K, the edge 128 thus coming into substantially the same plane as edges 125 and 126 of cheeks H and K, with the edge 124 at the crotch thereof. A throat M (Figure 24) then is bent at 43*a* and 108 and is joined along edges 110 and 111 to edges 110*a* and 111*a* respectively of cheek K by a double seam, and is similarly joined along edges 114 and 115 to edges 114*a* and 115*a* respectively of cheek H thus bringing edge 127 into the same plane as edges 126, 128 and 125. A sheet 95 similar to sheet E (Figure 4) but having the turned over portion 61 omitted, is then joined along its side edges to edges 122 and 123 of cheeks H and K respectively by a "Pittsburgh" lock joint, and end 59*a* is folded over end 124 of heel J. The snap lock hooks then are added to edges 125, 126, 127 and 128 and to edges 129 and 130.

Figures 7, 10 and 13 show a round side takeoff 135 which comprises a neck portion 136 having walls 137, 138 and 139 which co-operate with a channel member 1 to form the inlet end of a duct substantially as explained in connection with Figure 1. A sheet 141 provides a reduced duct at the outlet end of the channel, and the round branch connection 146 enters between forward edge 42 of sheet 141 and edge or corner 43, as shown in Figure 10.

The round takeoff is made of two identical top and bottom panels P (Figure 25), a heel Q (Figure 26) bent up at 43*b*, a throat R (Figure 27) and a sheet 141 (Figure 13) similar to sheet E but wider and having both edges turned up like edge 61. The two panels P are connected along edges 151 to heel Q along edges 151*a* by a groove seam and edges 153 of the two panels P are connected to throat R along edges 153*a* by a groove seam. Edges 155 of panels P then are connected to edges 155*a* of heel Q by a double seam. Edge 59*a* of sheet 141 then is folded over hemmed edge 161 of throat R and is spot welded to throat R thus bringing edge 81 into abutting relation to edge 156. Crimped collar 162 then is secured to the edges 163, 164 and 165 of the panels P, Q and R by an elbow edge as shown in Figure 16, and the snap lock hooks are applied to the turned up side edges of sheet 141 and edges 167 of panels P, and serve to hold the edges 167 in alignment with the turned up side edges of sheet 141 and in abutting relation.

In Figure 7 the two branch connections 96 and 135 are not connected to a channel 1, but are connected by two flat sheets 171 (one not shown), the edges 172 and 173 thereof being received in the snap lock hooks 10. This construction is desirable when two branch connections are to be used in a common length of duct, and in this construction the equivalent of channel 1 may be considered as being provided by the side panels 171 and one of the takeoff members 96 or 135.

What we claim and desire to secure by United States Letters Patent is:

1. A branch connection comprising a throat portion having an extension strip, a cheek having a quadrant shaped portion and having an extension secured to the throat extension strip for a portion of its length and at substantially a right angle thereto, a tapered curved heel portion having a lateral extension at its smaller end, the curved edge of said quadrant cheek being secured to the edge of said heel portion on the same side as the lateral extension, an offset cheek secured at its edges to said heel portion and throat portion, a sheet having one side edge secured to the remaining edge of the throat extension, and having an end edge folded over the quadrant cheek and the other side edge bent over, and snap lock hooks overlying the throat extension strip and bent over side edge and heel extension.

2. A branch connection comprising a throat portion having an extension strip, a cheek having a quadrant-shaped portion and having an extension secured to a portion of the throat extension strip and at substantially a right angle thereto, a tapered curved heel portion having a lateral extension at its smaller end, the curved edge of said quadrant portion being secured to the edge of said heel portion on the same side as said lateral extension, an offset cheek secured at its edges to said heel portion and throat portion, a sheet having two bent over side edges one of which is secured to the remaining edge of the throat extension at right angles thereto and having an end edge folded over said quadrant portion, a snap lock hook overlying the lateral heel extension and the other bent over side edge of said sheet, and a second snap lock hook on the edge of said throat extension strip, and a third snap lock hook on the remaining end edge of said sheet.

3. A branch connection comprising a throat portion having an extension strip forming one edge of a channel, a cheek having a quadrant-shaped portion and having an extension secured to a portion of the throat extension strip and at substantially a right angle thereto, a curved heel portion having a lateral extension at one end, the curved edge of said quadrant portion being secured to the edge of said heel portion on the same side as said lateral extension, an offset cheek secured at its edges to said heel portion and throat portion, a sheet secured by one side edge to the remaining edge of the throat extension strip and having an end edge folded over the quadrant portion, said sheet having a bent over side edge located in alignment with said lateral heel extension to form an edge of said channel, snap lock hooks on the edges of said channel and a complementary channel member having edges adapted to engage said snap lock hooks to form therewith a reducing duct with a branch connection at right angles thereto within the length of the complementary channel member.

4. A branch connection comprising a channel member having an outer wall and side walls providing two edges extending the length of the channel member and forming the open side thereof, a wall set back from said edges and extending part of the length of said channel member, the outer wall of said channel member having a portion parallel to said set back wall and a portion extending at an angle thereto forming part of a branch fitting to provide a gradual

change in direction of flow, and a complementary channel member having two edges forming the open side thereof, and means for removably securing said latter channel member in edge to edge relation with the first channel member to form a reducing duct with the set back wall and a takeoff connection with said outer wall.

5. A branch connection as defined in claim 4 wherein said means for removably securing said channel members together comprises a snap lock joint extending along said edges.

6. A branch connection comprising a pair of cheek members having quadrant portions with extension strips adapted to provide the edges of a channel, one of said cheek members having a bend where it joins its extension strip, a throat member having a rectangular portion and a tapered portion joined to said cheek members, a heel joined to the curved edges of said quadrant portions, and a sheet joined at its sides to said extension strips and having one end folded over an edge of said heel.

7. A branch connection comprising a pair of cheek members having quadrant portions with extension strips adapted to provide the edges of a channel, and tongues at one end, one of said cheek members having a bend where it joins said strip, a throat member having a rectangular portion and a tapered portion joined to said cheek members with a tongue at the end of said tapered portion, a generally triangular heel having a tongue opposite its base and joined to said quadrant portions, a sheet joined at its sides to said extension strips and having one end folded over the base of said heel, snap lock hooks on said channel edges, and a complementary channel member having edges adapted to engage said snap lock hooks whereby a reducing duct having a branch connection is provided.

8. A branch connection comprising a pair of cheek members of generally rectangular shape having a tapered extension at one corner merging in an arcuate edge, a heel comprising a generally rectangular portion having tapered edges merging in an arcuate edge and secured to said cheeks with the arcuate edges adjacent, a throat of generally semi-circular shape secured to said cheeks with its curved edge adjacent said arcuate edges and having its straight edge bent over, a sheet having one end edge folded over the bent over edge of said throat and having bent over side edges in alignment with edges of said cheeks to form edges of a channel member, snap lock hooks on the latter, and a collar secured to said arcuate edges.

9. A branch connection comprising a pair of cheek members of generally rectangular shape having a tapered extension at one corner merging in an arcuate edge, a heel comprising a generally rectangular portion having tapered edges merging in an arcuate edge and secured to said cheeks with the arcuate edges adjacent, a throat of generally semi-circular shape secured to said cheeks with its curved edge adjacent said arcuate edges and having its straight edge bent over, a sheet having one end edge folded over the folded edge of said throat and having bent over side edges in alignment with edges of said cheeks, snap lock hooks on said latter edges, a collar secured to said arcuate edges, and a complementary channel member having edges adapted to engage said snap lock hooks whereby a reducing duct with a circular branch connection is provided.

10. A branch connection comprising a channel member having an outer wall and side walls providing two edges extending the length of the channel member and forming the open side thereof, a wall set back from said edges and extending part of the length of said channel member, the outer wall of said channel member having a portion parallel to said set back wall and a portion extending at an angle thereto forming part of a branch fitting to provide a gradual change in direction of flow, wall members having edges removably held in juxtaposition to the edges of the channel member which form the open side of said channel member, and means substantially closing the space between the opposite edges of said wall member whereby a reducing duct having at least one branch connection is formed.

ANDREW H. BERGER.
ALLAN S. PINSKER.