(12) UK Patent (19) GB (11) 2 235 356 (13) B

(54) Title of Invention

An electronic image composition system

(51) INT CL[5]; **G06F 15/66**

(21) Application No
9013192.1

(22) Date of filing
13.06.1990

(30) Priority Data

(31) **8913638**

(32) **14.06.1989**

(33) **GB**

(43) Application published
27.02.1991

(45) Patent published
23.02.1994

(52) Domestic classification
(Edition M)
H4T TCJA TCXX T124 T129 T144
H4F FESX FGH FS2 FS25R FS26 FS30X FS31P FS31X

(56) Documents cited
EP0256816 A1

(58) Field of search

As for published application 2235356 A *viz:*
UK CL(Edition K) **H4F FEG FESA FESG FESK FESX FGG FGH, H4T TCGA TCGD TCGG TCGK TCGX TCHA TCHD TCHX TCJA TCXX**
INT CL[5] **G06F, H04N**
updated as appropriate

(72) Inventor(s)
Anthony David Searby
Colin John Wrey

(73) Proprietor(s)
Quantel Limited

(Incorporated in the United Kingdom)

Pear Tree Lane
Newbury
Berkshire
RG13 2LT
United Kingdom

(74) Agent and/or
Address for Service
R G C Jenkins & Co
26 Caxton Street
London
SW1H ORJ
United Kingdom

FIG.1

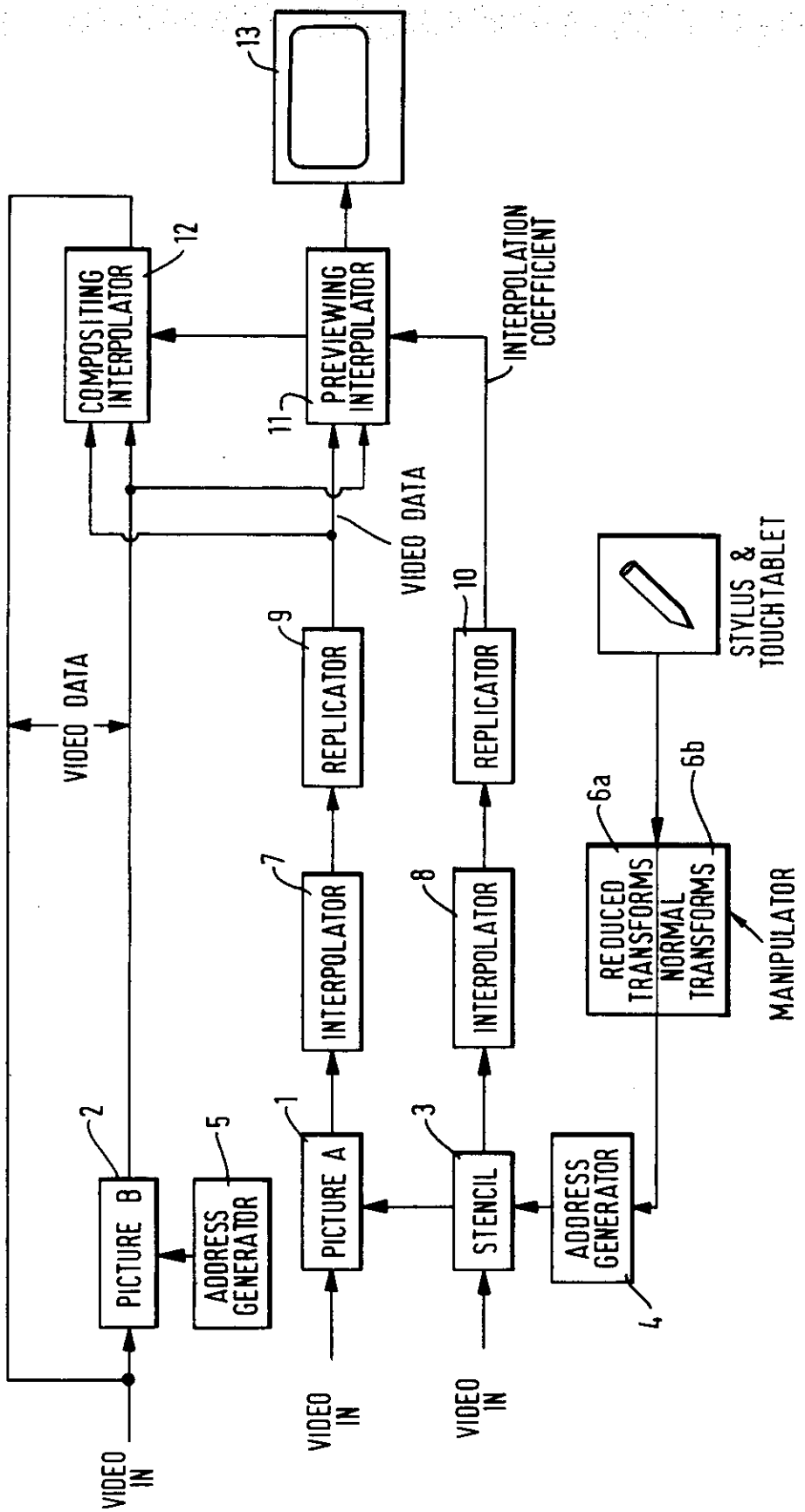
13
COMPOSITING INTERPOLATOR
12
PREVIEWING INTERPOLATOR
11
INTERPOLATION COEFFICIENT
VIDEO DATA
VIDEO DATA
9
REPLICATOR
10
REPLICATOR
STYLUS & TOUCHTABLET
6a
6b
REDUCED TRANSFORMS
NORMAL TRANSFORMS
MANIPULATOR
7
INTERPOLATOR
8
INTERPOLATOR
2
PICTURE B
5
ADDRESS GENERATOR
1
PICTURE A
3
STENCIL
ADDRESS GENERATOR
4
VIDEO IN
VIDEO IN
VIDEO IN

FIG. 2

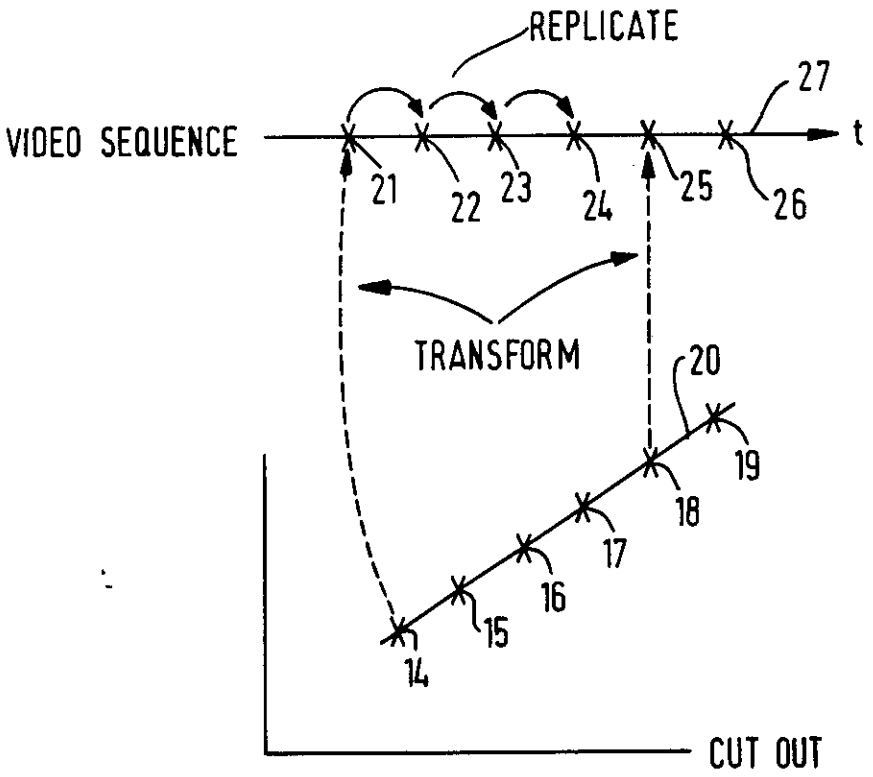
REPLICATE
VIDEO SEQUENCE
t
21
22
23
24
25
26
27
TRANSFORM
20
19
18
17
16
15
14
CUT OUT

AN ELECTRONIC IMAGE COMPOSITION SYSTEM

FIELD OF THE INVENTION

The invention relates to electronic image composition systems.

BACKGROUND OF THE INVENTION

Electronic image composition systems are known, having storage means for storing video signals representing at least two pictures, preview means for displaying a series of artist-selected transformations of a first of said pictures, or a part thereof, until a desired transformation is perceived, and compositing means for thereafter producing composite pictures by combining transformed video signals, or a part thereof, with video signals of a second of said pictures.

An example of such a system is that included in the video graphic equipment manufactured by the present Assignee/Applicant and sold under the trade mark "PAINTBOX". In addition to the composition system, this equipment also includes an electronic painting system which allows an artist to "paint" either or both of said pictures into the storage means, in response to (among other things) movement of a stylus over a touch tablet, which simulates a

painting or drawing implement. The image composition system referred to above is described in United States Patent No. 4602286 and equivalent British Patent No. 2113950 and the associated painting system is described in greater detail in United States Patent No. 4514818 and equivalent British Patent No. 2089625 both assigned to the present Assignee and included herein as part of the present disclosure.

In the equipment manufactured by the present Assignee and sold under the trade mark "PAINTBOX", additional storage means are provided which allow the painting system to create a control image which may be used to simulate a stencil, whereby part of the image being composed may be masked while the remainder remains exposed for further modification. This stencil signal is also used during operation of the compositing means to control the combining of video signals so as to simulate the "pasting" of the (transformed) chosen part of the first picture into the second picture. The preview means allows an artist to effect a series of transformations to the first picture (which may include changes in size, position, perspective orientation) until a desired transformation is perceived, whereupon (in response to a "stick" command) the compositing means combines the two images into a single store. The type of

transformation required is defined by using predetermined movements of the stylus upon the touch tablet which is then implemented by reading video signals from the storage means in a different order from that in which they were written to said storage means.

To assist an artist in effecting the desired transformation, it is desirable for the transformed pictures to be displayed in real-time during preview, that is to say, any operation effected by the artist should be displayed substantially instantaneously. However, the calculations involved in many of the transformations are not trivial and have to be repeated for each pixel in the transformed output. Thus, in practice, a portion of an image (often referred to as a "cut-out") can only be transformed in real-time if restrictions are placed on the number of pixels making up the cut-out or, alternatively, if the cut-out is shown as a surrounding margin which is manipulated in real-time, whereafter the full image is processed once the desired position has been identified by manipulation of the margin.

SUMMARY OF THE INVENTION

It is an object of the present invention to provide an improved system for transforming images.

According to one aspect of the present invention

there is provided an electronic image manipulation system for manipulating image data representing a multiplicity of picture elements which together form an initial image to produce manipulated data representing a multiplicity of picture elements which together form a transformed image, the system comprising: an image store for storing digital data representing said initial image at full resolution; user operable input means for selecting a manipulation to be applied to data from the store; and processing means responsive to said user operable input means for addressing data in said store in an order corresponding to the selected manipulation and for interpolating the addressed data to produce processed data representing the transformed image, and wherein the processing means is operable in a preview mode such that only some of the data in the store is addressed and interpolated thereby producing reduced processed data which is replicated to produce data representing the transformed image at low resolution, and, when an acceptable manipulation has been selected, in a composition mode such that full processed data is produced representing the transformed image at full resolution.

The provision of transformed video signals for only some pixels in the transformed picture reduces the number of times a transform equation has to be solved to

produce a particular transformation of the first picture, or a cut-out taken therefrom. However, the size of the transformed picture is not affected (compared to what it would have been had all the pixels been transformed) because replications, or derivatives, of the transformed video signals are produced for pixels which would otherwise not receive video signals. The generation of replications, or derivatives, can be effected rapidly and therefore there is a substantial saving in the amount of time required to produce a transformation for preview. The relationship between the number of pixels actually transformed and the number of pixels making up the transformed image, is referred to as the transform reduction factor, which may vary from one transformation to another. Thus, for example, a different transform reduction factor may be used when transformations which reduce the size of the image are being employed.

According to another aspect of the invention there is provided a method of manipulating image data representing a multiplicity of picture elements which together form an initial image to produce manipulated data representing a multiplicity of picture elements which together form a transformed image, the method comprising: storing digital data representing said initial image at full resolution; selecting a

manipulation to be applied to data from the store; and processing the initial image data by addressing data in said store in an order corresponding to the selected manipulation and for interpolating the addressed data to produce processed data representing the transformed image, and wherein during an image preview stage only some of the data in the store is addressed and interpolated thereby producing reduced processed data which is replicated to produce data representing the transformed image at low resolution, and during an image composition stage, when an acceptable manipulation has been selected, full processed data is produced representing the transformed image at full resolution.

In a further aspect the invention provides an electronic image manipulation system for use in manipulating an image defined as a multiplicity of picture elements (pixels) in accordance with a user selected manipulation, comprising an image store for storing digital data representing an image to be manipulated, processing means for transforming data of the stored image so that said transformed data when read in raster sequence affords a transformed image of reduced resolution for display, said processing means operating to calculate the addresses in the image store which correspond with the addresses of pixels of the transformed image, said calculated addresses which do

not correspond precisely with an address of the store each identifying a group of pixels of the stored image within which the corresponding calculated address is located, interpolating means which employ weighting coefficients of the pixels of each said group to calculate the value of the corresponding output pixel and a user operable input means for inputting data defining transforms to be performed by the processing means, the processing means being operable in a first mode in which transformations are applied to addresses of selected pixels of the image to calculate values of respective reduced resolution pixels of the transformed image and in a second mode in which satisfactory transformations applied in said first mode of operation are applied to data of the stored image to produce a high resolution output image.

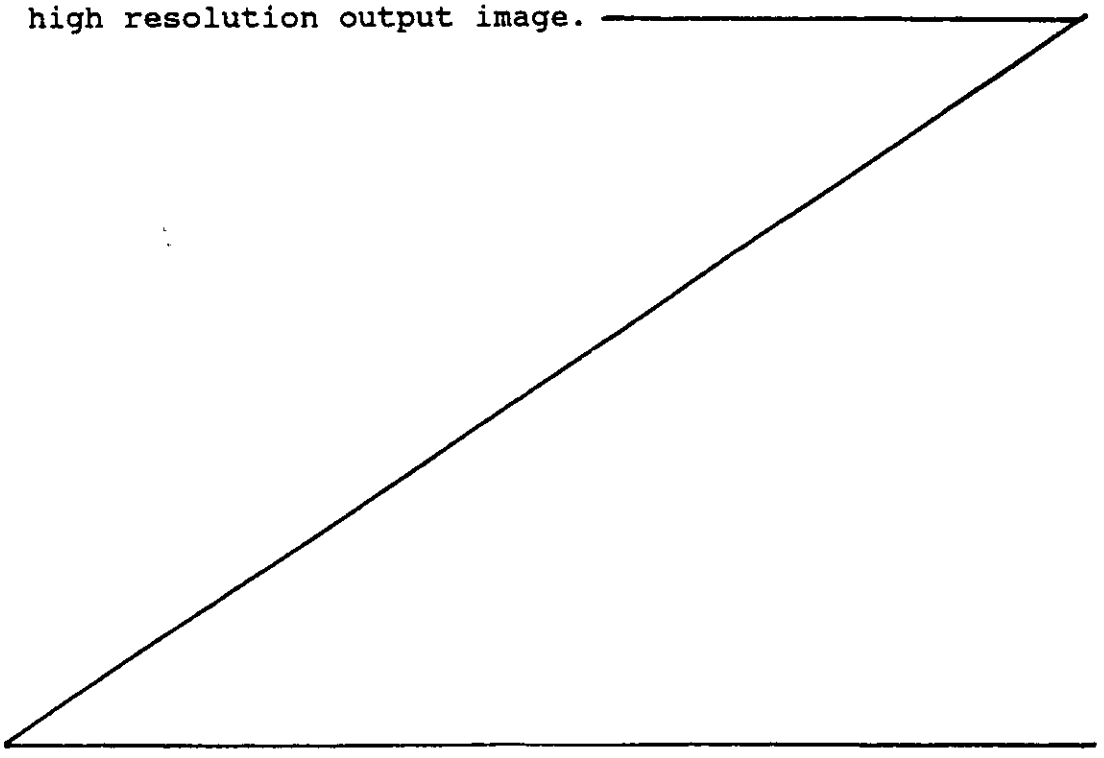

The above and further features of the invention are set forth with particularity in the appended claims and together with advantages thereof will become clearer from consideration of the following detailed description of an exemplary embodiment of the invention given with reference to the accompanying drawings.

BRIEF DESCRIPTION OF THE DRAWINGS

Figure 1 is a block diagram of an image composition system; and

Figure 2 is a diagram representing an operation performed by the system shown in Figure 1.

DESCRIPTION OF A PREFERRED EMBODIMENT OF THE INVENTION

Referring now to Figure 1 of the accompanying drawings, an image composition system is shown. The image composition system of Figure 1 is similar to that described in the aforesaid British Patent No. 2113950. The system comprises three framestores 1, 2 and 3, which are used for storing digital video signals representing three pictures, referred to herein as picture A, picture B and stencil. The first

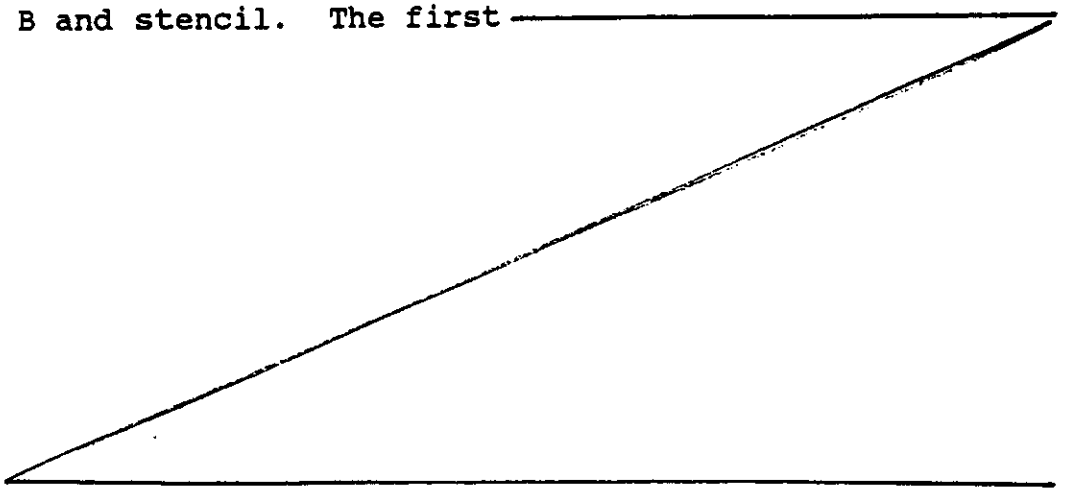

and second stores 1 and 2 have separate planes for storing different colour components of the picture, say red, green and blue (RGB) or luminance and colour difference, YUV. The stencil store 3, on the other hand, is only required to store a monochrome picture, of say eight bits per pixel and so a single plane is sufficient. As explained in British Patent No. 2113950, pictures can be painted into the stores 1, 2 and 3, or derived from other sources, such as a television camera. The signals in the stencil store 3 represent a stencil, which can be created for example to expose a selected part of picture A while masking the remainder thereof. The stencil signals defining the exposed area having a maximum value, those defining the masked area have a zero, or relatively low, value and those at the interface of the two areas vary gradually from the one value to the other.

The first store 1 and stencil store 3 have a common address generator 4 which provides write addresses when signals are written to the stores and provides read addresses when signals are read out from the stores. Normally, the first store 1 and the stencil store 3 are read in parallel, so that a selected positional relationship between the picture A and the stencil is maintained. The second store 2 has a separate read address generator 5 to control

independently the writing and reading of video data therefrom.

The system also includes a manipulator 6 adapted to produce spatial transformations of the picture A and the stencil read from the first store 1 and the stencil store 3. The manipulator 6 is shown as two separate elements, a reduced transforms manipulator 6a and a normal transforms manipulator 6b, but can be implemented as a single arithmetic circuit. The manipulator 6 can be controlled to perform either reduced transformations, required when the system is configured in a preview mode, or full transformations, required during the final sticking process when the system is configured in a compositing mode, with switching between these two modes of operations being perfected by predetermined user instructions. The manipulator 6 employs sets of parameters defining difference transformations and the user, who it is envisaged will be an artist with little or no experience in the use of computers as such, can select a transformation (for example a rotation) and cause the transformation to progress in steps by predetermined movements of a pressure sensitive stylus on a touch tablet, or by operation of another suitable input device (not shown). After selection of a particular transformation, the

manipulator 6 determines the address in the first store 1 from which video signals are to be read at particular times to "fill" the pixels in the transformed picture, the position of these pixels being predetermined by their order in the output sequence. In general, the address derived at any particular time by the manipulator 6 will not coincide exactly with a location in the first store 1, but will consist of an integer part, defining the address of the nearest location in the first store 1, and a fractional part, defining a sub-pixel deviation therefrom. The address generated in this form is therefore used to read pixel values from four adjacent addresses in the first store 1, which addresses are closest to the calculated address. These four pixel values are applied to an interpolator 7 which interpolates them in proportions determined by the fractional address of the pixel to derive a transformed output pixel. Transformed pixels output from interpolator 7 are applied to a replicator 9, the operation of which will become clearer in the following description, which in turn passes pixel values to a linear interpolation circuit 11. The linear interpolation circuit 11 also receives second input picture signals from the second store 2 which, during operation of the system, is read in response to

address generator 5, to produce an output synchronised, pixel by pixel, with the output of interpolator 7.

The stencil store 3 is also read in response to the address generator 4 under the control of the manipulator 6 and the output signals from the stencil store 3 are applied to an interpolator 8, similar to the interpolator 7, and to a replicator 10, similar to the replicator 9. The resulting video signals defining the transformed stencil are applied to the linear interpolation circuit 11, where they function as interpolating coefficients for successive pixels. The linear interpolation circuit 11 is used when the system is configured in the preview mode and its output is applied to a monitor 13.

The transformed output from the first store 1 and the untransformed output from the second store 2, are also applied to a second linear interpolator circuit 12, which is used when the system is configured in the compositing mode i.e. during the "stick" process. Like the linear interpolation circuit 11, associated with the first store 1, the interpolator circuit 12 also receives the transformed output from the stencil store 3, which again functions as an interpolating coefficient. During the compositing mode, the replicators 9 and 10 are not required and they are

rendered inoperative or transparent. The output of the linear interpolator circuit 12 is fed back to the framestore 2, where it overwrites the original picture read therefrom. As previously stated, this process is identified as a "stick" wherein the cut-out becomes a permanent part of the background picture. During compositing, the output of the linear interpolation circuit 11 can also be displayed on the monitor 13.

The operation of the dual mode manipulator 6a/6b is illustrated in Figure 2, in which a series of crosses 14 to 19 represent, say, storage locations in the first store 1, containing video signals defining a diagonal line 20 in a small part of picture A. For the purpose of explanation, it will now be assumed that a transformation has been selected which will rotate a cut-out taken from picture 1 so that the diagonal line becomes horizontal. Picture rotation transformations are per se known from for example our US Patent No, 4611232 and corresponding British Patent No. 2119197 the teachings of which re incorporated herein. Returning to Figure 2, a series of crosses 21 to 26 represents successive pixels in the output picture defining a horizontal line 27 obtained by transforming respective pixels from the locations identified by the series of crosses 14 to 19. For the small part of the image shown, such a translation

would previously have required five individual transform calculations to be made, one for each pixel 14 to 19 in the line 20. It will be appreciated that such an operation, when repeated for the whole cut-out, could preclude real-time processing in many cases, which is highly undesirable during preview. However, in the present embodiment, the manipulator 6 is conditioned, during preview, to perform transformations only on selected pixels in picture A as they are read in sequence from the first store 1. Thus, as represented in Figure 2 of the accompanying drawings a transformation is performed for only every fourth pixel in the output sequence, e.g. pixels 21 and 25 and transforms are not carried out to define the intervening pixels i.e. pixels 22, 23, 24 etc. However, to avoid having gaps in the output sequence, a transformed pixel, e.g pixel 21, is replicated for the non-transformed pixels, e.g. pixels 22 to 24, and this procedure is followed over the whole cut-out. The same procedure is also applied to the stencil signal output from the stencil store 3. It will of course be appreciated that the selection of pixels to be transformed need not be limited to every fourth pixel and can instead be any number of selected pixels. The number may be predefined or may be selectable by use of the stylus from a menu of options

displayed on the monitor 13.

As a result of this pixel replication, there is some degradation to the trial composition displayed on the monitor 13 during preview, but this is acceptable because the display at this point is only transient and is not representative of the quality of the image in the final picture. Also, the level of perceived degradation can be reduced by making the cut-out appear to be transparent so that the background image can be seen through the cut-out during preview. This can be done by limiting the stencil values to a predetermined maximum such that during preview the pixels representing the cut-out do not completely replace the pixels in the background i.e. picture B, but instead image position the display comprise a contribution from pixels in picture A, the cut-out, and picture B, the background.

Once a satisfactory result has been obtained, the manipulator 6a/6b is switched over to normal operation. During normal operation the manipulator 6a performs a transformation for every pixel of the cut-out including picture signals from the first picture store 1 and stencil signals from the stencil store 3. During the final sticking process, fast operation is not essential because real-time interaction is no longer required. The final sticking process as

between pictures A and B is performed by the compositing interpolator 12 under the control of the stencil signals from the stencil store 3 at full resolution.

The degree of replication during the preview stage may be dependent, under the control of the operating software, on the nature of the transformation and the size of the cut-out. The replication may occur not only horizontally but also vertically, in which case pixels on some lines would not undergo transformation but would be filled by replications. Instead of using mere replications, pixels omitted during the transformation stage may be reconstructed by filtering or interpolating the transformed pixels. The only constraints placed on these more sophisticated techniques is that the filling process should be much quicker than the transformation process.

The invention is not of course confined in its application to systems such as those described in British Patents Nos. 2113950 and 2089625 and may be applied to any image composition system having a preview mode and a compositing mode. For example, the concept of making the cut-out transparent during preview can be applied to image manipulation systems such as the system sold by us under the trade mark

"ENCORE" in which, among other things, one video sequence can be primed into another video sequence such as to create the effect of three dimensional movement of the one video sequence in the other sequence.

Furthermore, as described herein transformation is performed on the read side of the framestores but, if preferred, the transformation could equally be provided on the write side of the framestores.

Having thus described the present invention by reference to a preferred embodiment it is to be well understood that the embodiment in question is exemplary only and that modifications and variations such as will occur to those possessed of appropriate knowledge and skills may be made without departure from the scope of the invention as set forth in the appended claims and equivalents thereof.

CLAIMS:

1. An electronic image manipulation system for manipulating image data representing a multiplicity of picture elements which together form an initial image to produce manipulated data representing a multiplicity of picture elements which together form a transformed image, the system comprising:

an image store for storing digital data representing said initial image at full resolution;

user operable input means for selecting a manipulation to be applied to data from the store; and

processing means responsive to said user operable input means for addressing data in said store in an order corresponding to the selected manipulation and for interpolating the addressed data to produce processed data representing the transformed image,

and wherein the processing means is operable in a preview mode such that only some of the data in the store is addressed and interpolated thereby producing reduced processed data which is replicated to produce data representing the transformed image at low resolution, and, when an acceptable manipulation has been selected, in a composition mode such that full processed data is produced representing the transformed image at full resolution.

2. A system as claimed in claim 1, further comprising a stencil store for storing digital data representing a stencil at said full resolution, said processing means being arranged to apply the same processing to said stencil data as that applied to said initial image data such that in the preview mode stencil data representing a transformed stencil at low resolution is produced and in the composition mode stencil data representing the transformed stencil at full resolution is produced.

3. A system as claimed in claim 2, further comprising a background store for storing digital data representing a background picture at said full resolution; and

compositing means responsive to the transformed stencil data for combining the transformed image data with the background image data to produce composite data representing the initial image combined with the background image, the compositing means being operable in the preview mode to combine data representing the low resolution transformed image with the background image data in dependence on the low resolution stencil data, and in the composition mode to combine data representing the full resolution transformed image with the background image data in dependence on the full resolution stencil data.

4. A system as claimed in claim 3, further comprising a monitor for displaying the image represented by the composite data.

5. A system as claimed in any preceding claim, wherein the transformed image data represents a portion of the initial image.

6. A system ac claimed in any preceding claim, wherein the user operable input means comprises a pressure sensitive stylus and a touch tablet.

7. A system as claimed in any preceding claim, wherein the processing means comprises a manipulator responsive to said user operable input means for producing spatial transformation data and an addressing means responsive to the spatial transformation data for addressing the image store to cause data to be output therefrom.

8. A system as claimed in any preceding claim, wherein the processing comprises interpolating means for interpolating data from the image store to produce said processed data.

9. A system as claimed in claim 8, wherein the processing means further comprises replicating means

operable in said preview mode to replicate the data from the interpolating means to produce said low resolution transformed image data.

10. A system as claimed in claim 3, wherein said compositing means is operable in said compositing mode to write said composite data to said background store.

11. A method of manipulating image data representing a multiplicity of picture elements which together form an initial image to produce manipulated data representing a multiplicity of picture elements which together form a transformed image, the method comprising:

storing digital data representing said initial image at full resolution;

selecting a manipulation to be applied to data from the store; and

processing the initial image data by addressing data in said store in an order corresponding to the selected manipulation and for interpolating the addressed data to produce processed data representing the transformed image,

and wherein during an image preview stage only some of the data in the store is addressed and interpolated thereby producing reduced processed data which is replicated to produce data representing the transformed

image at low resolution, and during an image composition stage, when an acceptable manipulation has been selected, full processed data is produced representing the transformed image at full resolution.

12. A method as claimed in claim 11, further comprising storing digital data representing a stencil at said full resolution, and applying the same processing to said stencil data as that applied to said initial image data such that in the preview stage stencil data representing a transformed stencil at low resolution is produced and in the composition stage stencil data representing the transformed stencil at full resolution is produced.

13. A method as claimed in claim 12, further comprising storing digital data representing a background picture at said full resolution; and

combining the transformed image data with the background image data in response to the transformed stencil data to produce composite data representing the initial image combined with the background image,

and wherein the preview stage data representing the low resolution transformed image is combined with the background image data in dependence on the low resolution stencil data, and during the composition stage data representing the full resolution transformed

image is combined with the background image data in dependence on the full resolution stencil data.

14. A method as claimed in claim 13, further comprising displaying the image represented by the composite data.

15. A method as claimed in any of claims 11 to 14, wherein the transformed image data represents a portion of the initial image.

16. A method as claimed in any of claims 11 to 15, further comprising producing spatial transformation data, wherein said store is addressed in response to the spatial transformation data.

17. A method as claimed in claim 13, wherein in said compositing stage said composite data is written to said background store.

18. An electronic image manipulation system for use in manipulating an image defined as a multiplicity of picture elements (pixels) in accordance with a user selected manipulation, comprising an image store for storing digital data representing an image to be manipulated, processing means for transforming data of the stored image so that said transformed data when read

in raster sequence affords a transformed image of reduced resolution for display, said processing means operating to calculate the addresses in the image store which correspond with the addresses of pixels of the transformed image, said calculated addresses which do not correspond precisely with an address of the store each identifying a group of pixels of the stored image within which the corresponding calculated address is located, interpolating means which employ weighting coefficients of the pixels of each said group to calculate the value of the corresponding output pixel and a user operable input means for inputting data defining transforms to be performed by the processing means, the processing means being operable in a first mode in which transformations are applied to addresses of selected pixels of the output image to calculate the values of respective reduced resolution pixels of the transformed image and in a second mode in which satisfactory transformations applied in said first mode of operation are applied to data of the stored image to produce a high resolution output image.

19. A system or a method substantially as described herein with reference to the accompanying drawings.

REGISTER ENTRY FOR GB2235356

Form 1 Application No GB9013192.1 filing date 13.06.1990

Priority claimed:
14.06.1989 in United Kingdom - doc: 8913638

Title AN ELECTRONIC IMAGE COMPOSITION SYSTEM

Applicant/Proprietor
QUANTEL LIMITED, Incorporated in the United Kingdom, Pear Tree Lane, Newbury, Berkshire, RG13 2LT, United Kingdom [ADP No. 00674671007]

Inventors
ANTHONY DAVID SEARBY, 7 Montgomery Road, Newbury, Berkshire, United Kingdom [ADP No. 05588017002]

COLIN JOHN WREY, 11 Butson Close, NEWBURY, Berkshire, RG14 5JQ, United Kingdom [ADP No. 05634894001]

Classified to
H4T H4F
G06F

Address for Service
R G C JENKINS & CO, 26 Caxton Street, LONDON, SW1H ORJ, United Kingdom [ADP No. 00000950001]

Publication No GB2235356 dated 27.02.1991

Examination requested 02.04.1991

Patent Granted with effect from 23.02.1994 (Section 25(1)) with title AN ELECTRONIC IMAGE COMPOSITION SYSTEM

**** END OF REGISTER ENTRY ****

RENEWAL DETAILS

PUBLICATION NUMBER GB2235356

PROPRIETOR(S)

Quantel Limited, Incorporated in the United Kingdom, Pear Tree Lane, Newbury, Berkshire, RG13 2LT, United Kingdom

DATE FILED 13.06.1990

DATE GRANTED 23.02.1994

DATE NEXT RENEWAL DUE 13.06.1997

DATE NOT IN FORCE

DATE OF LAST RENEWAL 04.06.1996

YEAR OF LAST RENEWAL 07

STATUS PATENT IN FORCE

**** END OF REPORT ****