March 12, 1946. P. L. SPENCER 2,396,294

ARC DISCHARGE STARTING DEVICE

Filed Jan. 16, 1939

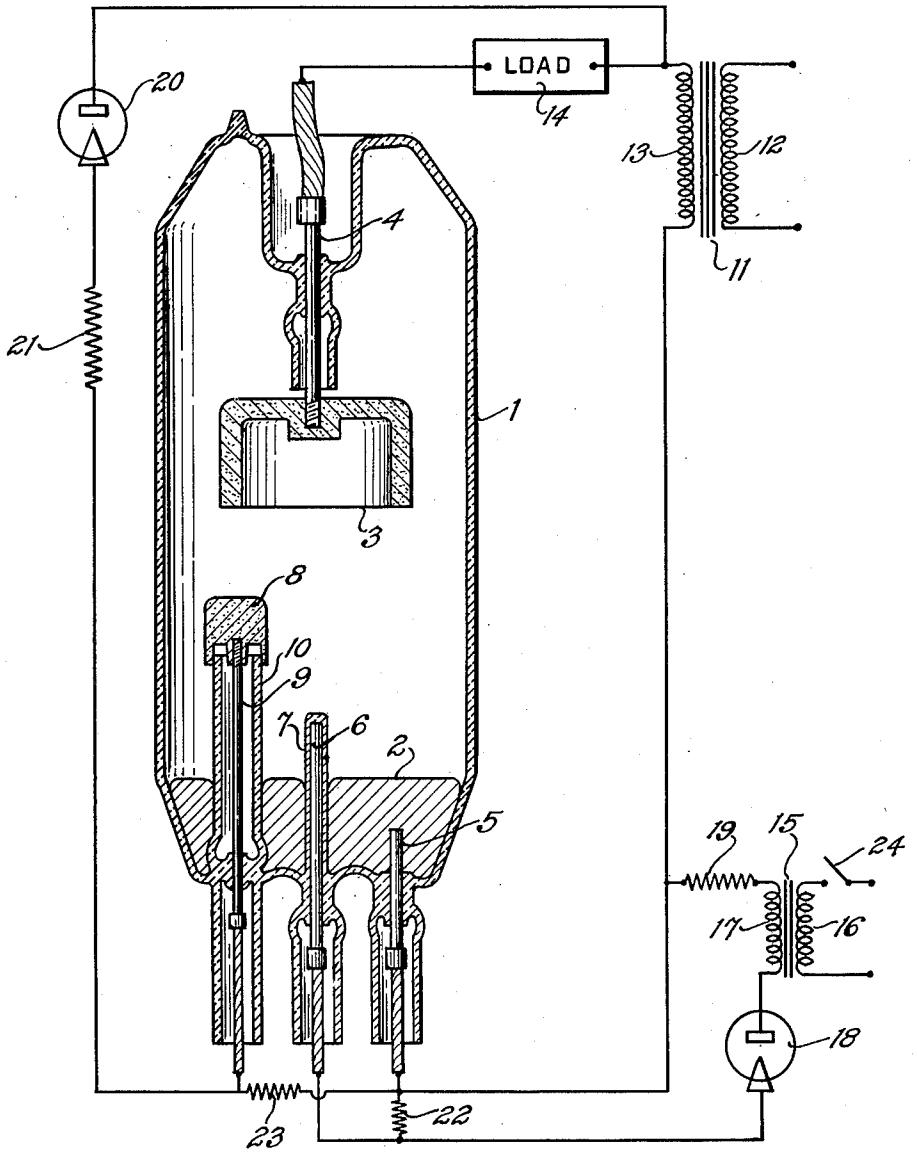

Inventor
PERCY L. SPENCER
by Elmer J. Gow
Attorney

Patented Mar. 12, 1946 2,396,294

UNITED STATES PATENT OFFICE

2,396,294

ARC DISCHARGE STARTING DEVICE

Percy L. Spencer, West Newton, Mass., assignor to Raytheon Manufacturing Company, Newton, Mass., a corporation of Delaware

Application January 16, 1939, Serial No. 251,069

8 Claims. (Cl. 250—27.5)

This invention relates to an electric arc discharge tube in which the arc is started by initiating an arc spot on a pool type cathode. The invention relates more particularly to such a device in which the arc spot is initiated by a high-starting voltage impressed on a starting electrode separated by an insulating wall from the pool cathode. Heretofore in such devices the life of the tube has been very short. After such tubes had been in operation a comparatively short time, voltages impressed on the starting electrode which initially produced fairly reliable starting were no longer sufficient, and the starting became very erratic. In many cases, even very high voltages failed to cause reliable starting.

An object of this invention is to devise a tube having an arc-starting arrangement of the foregoing type in which long life is secured.

Another object is to insure reliable starting throughout the life of such a device.

A further object is to prevent substantial changes in the starting characteristics of such a device during life.

An additional object is to enable reasonably low starting voltages to be used.

The foregoing and other objects of this invention will be best understood from the following description of an exemplification thereof, reference being had to the accompanying drawing, wherein the single figure represents a cross-section of a tube incorporating this invention, together with a diagrammatic representation of a circuit with which such a tube may be used.

The discharge tube represented consists of a glass envelope 1 having a liquid pool cathode 2, preferably of mercury, and an anode 3. The anode 3 is carried by a lead-in conductor 4 sealed through the upper end of the envelope 1. An electrical connection is made to the mercury pool cathode 2 by means of a lead-in conductor 5 sealed through the bottom of the envelope 1. In order to initiate an arc spot on the mercury pool 2, an igniting electrode 6 is also sealed through the bottom wall of the envelope 1. The electrode 6 consists of conducting material, such as, for example, tungsten which seals readily to glass. It is desirable that the electrode 6 have a good degree of heat conductivity, and for this reason it has a fairly substantial diameter. I prefer that this diameter be of the order of about 100 mils. The electrode 6 is insulated from the pool 2 by being coated with a glass layer 7 sealed to the surface of the electrode 6. It is usually also desirable to provide an auxiliary starting anode 8 so that upon the initiation of an arc spot, by means of the igniting electrode 6, this spot may be maintained by the auxiliary starting anode 8 until the main anode 3 is ready to draw current. The auxiliary anode 8 is supported on the lead-in 9 likewise sealed through the bottom wall of the envelope 1. The anode 8, together with its lead-in 9, is insulated from the cathode pool 2 by means of a glass tube 10 surrounding the lead-in 9 sealed to the bottom wall of the envelope 1.

If a high positive voltage impulse is impressed on the igniting electrode 6 and either the anode 3 or the auxiliary anode 8 is positive, a cathode spot will be initiated on the surface of the pool 2 and the arc discharge will start between the cathode 2 and the main anode 3 or auxiliary anode 8. As previously indicated, the auxiliary anode 8 is desirable in order to insure that a positive pickup voltage is present whenever the igniting electrode 6 is supplied with a starting voltage.

Due to various causes which are more or less obscure, heretofore, after a comparatively short period of operation, the surface of the glass member, corresponding to the member 7 in the present arrangement, became desensitized and the arc would no longer start reliably under the conditions described. I have discovered that if the wall of the glass member 7, from a point somewhat below the surface of the pool 2 to a point somewhat above that surface, is kept sufficiently thin, such desensitizing does not normally occur, and a long life and reliable starting at relatively low voltages throughout the life of the tube are secured. I have found that this thickness should be of the order of 10 mils or less, preferably about 5 mils. Under such conditions, relatively low voltages of the order of 2000 volts or less have produced positive and reliable starting of the arc spot. In order that these results be secured, I also believe that it is desirable to have the glass member 7 in intimate contact with the electrode 6. This effect is secured by fusing the glass member 7 onto the surface of the igniting electrode 6, as described above.

In accordance with my present theory of the operation of the present invention, the novel results are probably due to the following reasons. Heretofore the surface of the glass member 7 has been contaminated by disintegration of that surface, due to the conduction of current through and consequent electrolysis of the glass layer 7. The conductivity of glass rises rapidly as the temperature exceeds a region of about 80 to 100° C., and therefore the disintegration of the surface of the glass 7, due to the passage of current therethrough, likewise rises rapidly as the temperature

of the glass is permitted to increase. Furthermore, the amount of current conducted through the glass and likewise the disintegration of the glass increase as the voltage impressed across it increases. Since the arc is initiated immediately adjacent the surface of the glass member 7 on the pool 2, and this arc liberates a considerable amount of heat, repeated starting of the arc tends to heat the surface of the glass member 7 above the pool 2 to a comparatively high temperature. By providing a glass wall of the thinness specified, the thermal conductivity of the glass layer is greatly increased, and heat will flow readily from the surface of the member 7 above the pool 2 through the glass wall to the heat-conducting igniting electrode 6. The heat then flows along the igniting electrode 6 to a point below the surface of the pool 2, whereupon it can then flow readily through the thin glass walls 7 in contact with the pool 2 to the mercury of said pool. During normal operation with the tube illustrated running in air without additional cooling, the temperature of the mercury pool may be of the order of 65 to 70° C. However, it is also desirable in some instances to cool the tube, as, for example, by forced air cooling or by water cooling, in which case the pool may operate at temperatures of the order of 18 to 40° C. In any event it will be noted that the temperature of the mercury pool 2 is maintained normally considerably below the temperatures at which conductivity of the glass 7 tends to increase substantially. The thickness of glass wall specified maintains a relatively small temperature rise of the surface of the glass member 7 above the temperature of the pool 2. Under these conditions, during operation, the entire glass member 7 is maintained below a temperature at which substantial conduction of electricity through the glass walls 7, and disintegration of this glass, occur. By providing the member 7 with a thin wall, the total voltage which is impressed on the igniting electrode 6 can be decreased substantially over that necessary in the case of a thick glass wall. Since this is the voltage which tends to pass current through the glass wall 7 and thus produce disintegration thereof, the fact that this voltage is decreased by my present invention is another factor contributing to the minimizing of the disintegration of the surface of the glass member 7. Another factor which may have contributed to the desensitizing of the surface of the glass 7 may have been the trapping of charged particles in the surface of the glass member which are driven into said surface by the high voltages impressed upon the igniting electrode 6. By keeping the glass wall thin and therefore the igniting voltage low, this type of contamination of the glass member 7 likewise is decreased.

The tube which I have described above may be utilized in a wide variety of circuits. In the drawing I have illustrated one typical circuit which may be used. This circuit consists of an input transformer 11 having a primary winding 12 connected to a suitable source of alternating current, and a secondary winding 13. One end of the secondary winding 13 is connected to a suitable load 14 to the lead-in conductor 4 of the anode 3. The other end of the secondary winding 13 is directly connected to the lead-in conductor 5 of the cathode 2. The igniting voltage is supplied to the igniting electrode 6 through an igniting transformer 15 having a primary winding 16 connected to a suitable source of starting voltage impulses and the secondary 17. One end of the secondary 17 is connected through a current-limiting resistance 19 to the lead-in 5 of the cathode 2, while the other end of said secondary 17 is connected through a rectifier 18 to the igniting electrode 6. A high resistance 22 is preferably connected between the lead-in 5 and electrode 6. The rectifier 18 is desirable in order that only positive voltage impulses may be supplied to the igniting electrode 6. The pickup voltage of the auxiliary starting anode 8 may be supplied by having the upper end of the secondary winding 13 connected through a rectifier 20 and a current-limiting resistance 21 to the lead-in conductor 9 of the auxiliary starting anode 8. A resistance 23 is also preferably connected between the lead-in 9 and the electrode 6.

The starting impulses supplied by the igniting transformer 15 are synchronized with the voltage supplied by the secondary winding 13, so that a positive voltage is impressed on the starting anode 8 whenever an igniting voltage impulse is supplied to the igniting electrode 6. By controlling the input to the primary winding 16, as, for example, by means of a switch 24, the current flowing to the anode 3 and likewise the current delivered to the load 14 may be controlled.

Of course it is to be understood that this invention is not limited to the particular details as described above as many equivalents will suggest themselves to those skilled in the art. For example, the igniting electrode need not be inserted through the surface of the pool 2 from below inasmuch as it likewise can dip down into the pool 2 from above. Although I have used "Pyrex" glass as the material for the member 7, any suitable insulating material, for example, other glass, quartz, other ceramics, insulating oxides, and the like, can also be used. It is accordingly desired that the appended claims be given a broad interpretation commensurate with the scope of the invention within the art.

What is claimed is:

1. An arc discharge device comprising a sealed envelope containing a conducting liquid pool cathode, an anode, an igniting electrode electrically insulated from said pool cathode, and a glass layer on said igniting electrode, interposed between said pool electrode and said igniting electrode and in contact with the surface of said pool, said glass layer having a thickness of the order of ten mils or less.

2. An arc discharge device comprising a sealed envelope containing a conducting liquid pool cathode, an anode, an igniting electrode electrically insulated from said pool cathode, and a glass layer sealed to the surface of said igniting electrode, interposed between said pool electrode and said igniting electrode and in contact with the surface of said pool, said glass layer having a thickness of the order of ten mils or less.

3. An arc discharge device comprising a sealed envelope containing a conducting liquid pool cathode, an anode, an igniting electrode electrically insulated from said pool cathode, and a glass layer on said igniting electrode, interposed between said pool electrode and said igniting electrode and in contact with the surface of said pool, said glass layer having a thickness of the order of ten mils or less, said igniting electrode comprising an electrical conductor of a greater order of magnitude of thickness than said layer.

4. An arc discharge device comprising a sealed envelope containing a conducting liquid pool cathode, an anode, an igniter structure compris-

ing an electrical conductor electrically insulated from said pool cathode by an insulating layer, said insulating layer being in contact with the surface of said pool cathode and having a thickness of the order of ten mils or less.

5. An arc discharge device comprising a sealed envelope containing a conducting liquid pool cathode, an anode, an igniter structure comprising an electrical conductor electrically insulated from said pool cathode by an insulating layer, said insulating layer being in contact with the surface of said pool cathode and having a thickness of about five mils.

6. An arc discharge device comprising a sealed envelope containing a conducting liquid pool cathode, an anode, an igniter structure comprising an electrical conductor electrically insulated from said pool cathode by an insulating layer, said insulating layer being in contact with the surface of said pool cathode and having a thickness which produces a capacity between said conductor and said pool cathode of the order of 1.74×10^{-11} microfarads per square centimeter of surface area of said insulating layer or more.

7. A tube having an anode, a mercury-pool cathode, a starting electrode in the mercury, and an insulating layer between the cathode and the electrode having a thickness of between about 0.004 and 0.010 inch, whereby a cathode spot will be formed on the cathode upon the application of a relatively low voltage between the cathode and the starting electrode.

8. An electric discharge device including a cathode of the pool type and an ignition electrode comprising a conductor covered with a layer of insulating material of the order of .005 inch in thickness in contact with said cathode.

PERCY L. SPENCER.