March 1, 1932. J. F. MONGIARDINO ET AL 1,847,130

CARBURETOR

Filed April 21, 1930 3 Sheets-Sheet 1

Fig.1.

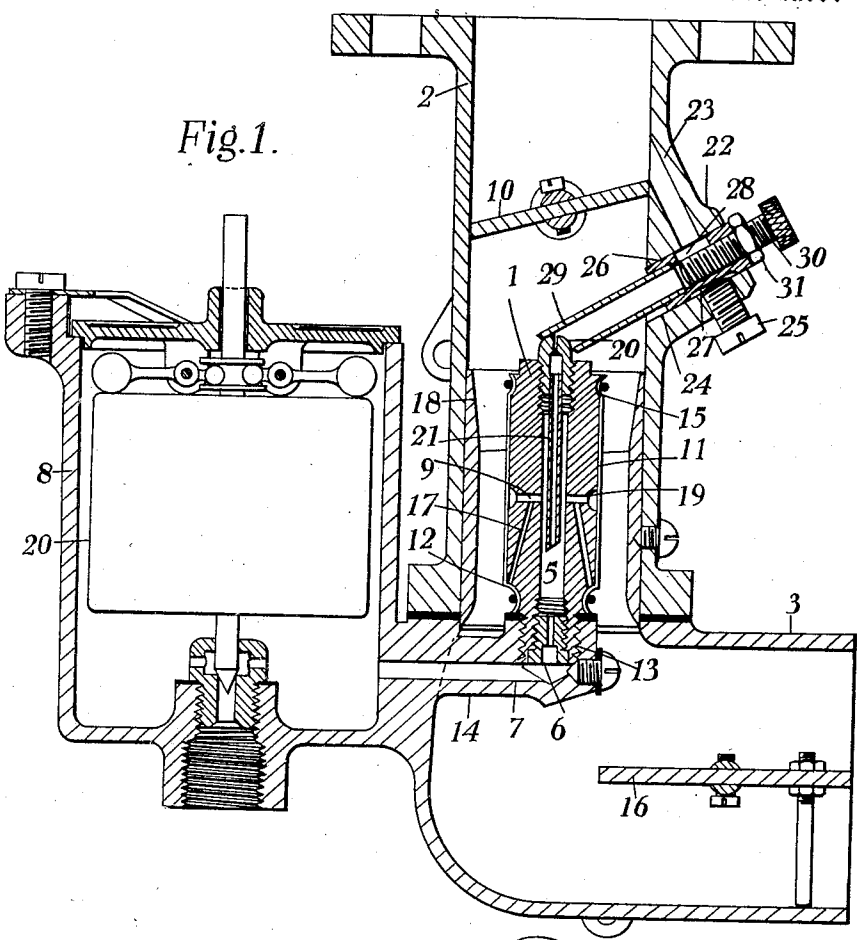


Fig. 2.

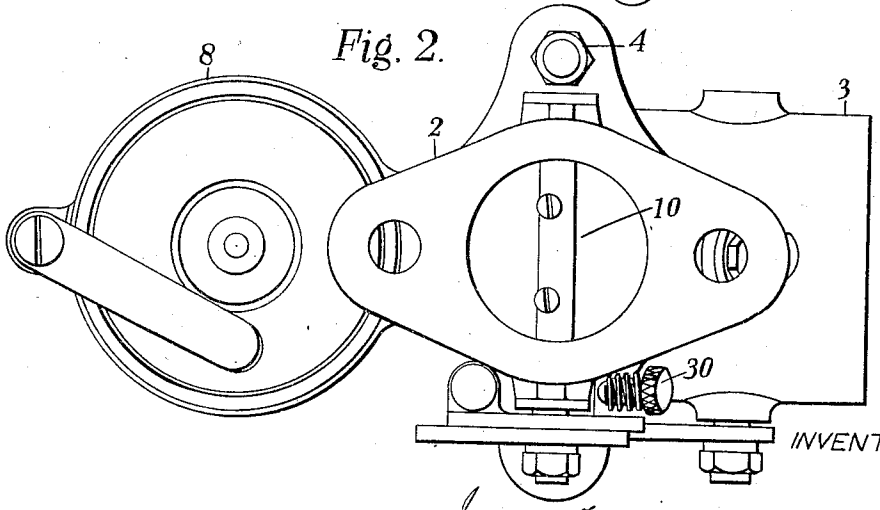


INVENTORS:

Joseph Frederick Mongiardino
William Joseph Turner,

By Frank S. Ackerman ATTORNEY

March 1, 1932. J. F. MONGIARDINO ET AL 1,847,130

CARBURETOR

Filed April 21, 1930 3 Sheets-Sheet 2

Fig. 3.

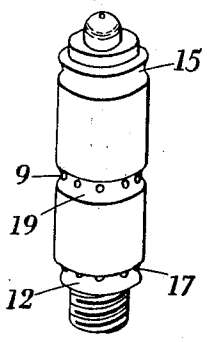


Fig. 4.

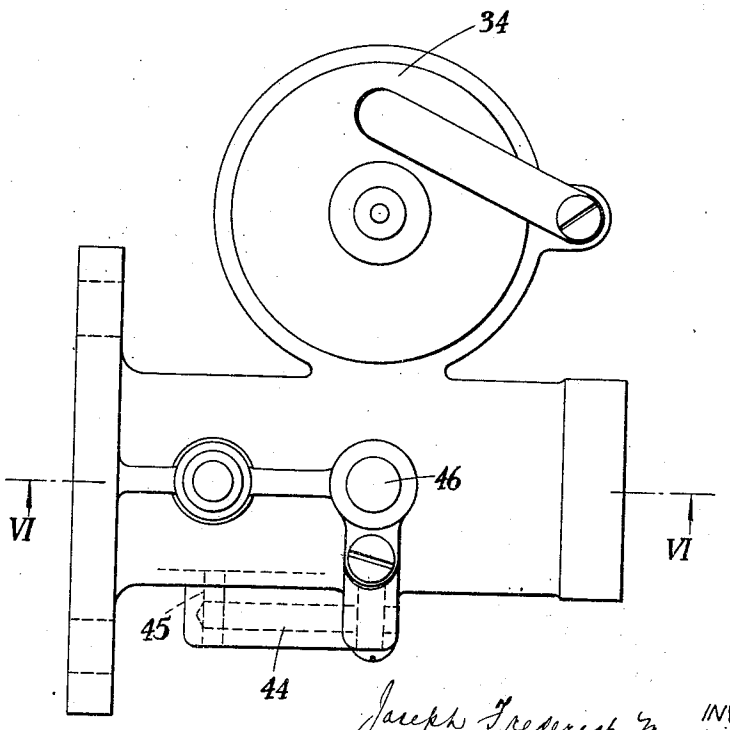


INVENTORS:
Joseph Frederick Mongiardino
William Joseph Turner
BY
Thomas Abbleman
ATTORNEY

March 1, 1932. J. F. MONGIARDINO ET AL 1,847,130

CARBURETOR

Filed April 21, 1930 3 Sheets-Sheet 3

*Fig. 5.*

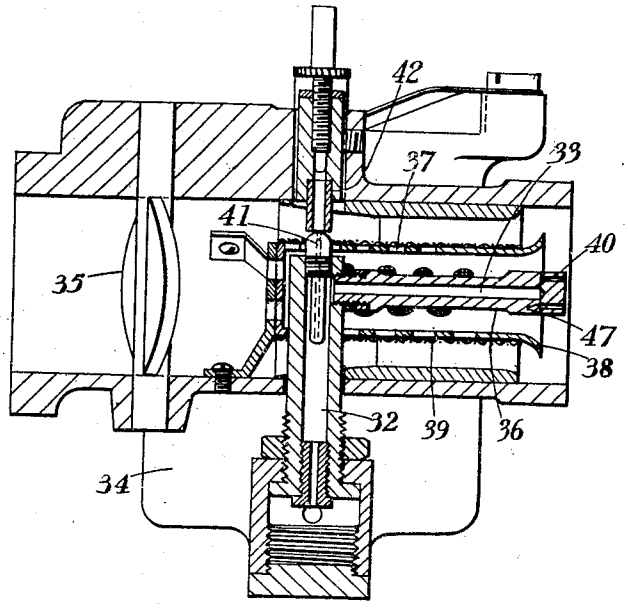


*Fig. 6.*

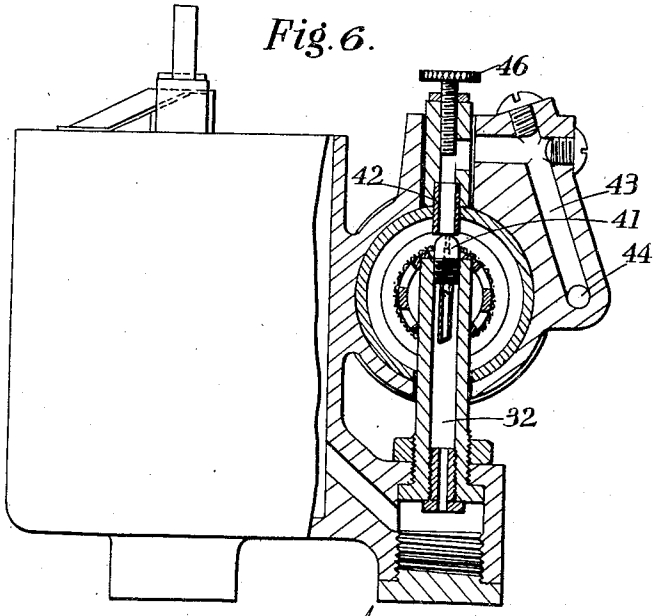


INVENTORS
Joseph Frederick Mongiardino
William Joseph Turner,
BY
Francis Adderman
ATTORNEY

Patented Mar. 1, 1932 1,847,130

# UNITED STATES PATENT OFFICE

JOSEPH FREDERICK MONGIARDINO AND WILLIAM JOSEPH TURNER, OF LONDON, ENGLAND

## CARBURETOR

Application filed April 21, 1930, Serial No. 446,134, and in Great Britain August 14, 1929.

This invention relates to carburetors for internal combustion engines, and in particular it is concerned with that type of carburetor in which liquid fuel flows to the surface of a diffuser mounted within an induction pipe, the surface being such that fuel will cling to it by surface tension until it is taken up by air flowing through the induction pipe.

One object of the present invention is to provide such a carburetor with a diffuser so formed that automatic adjustment of the quality of the mixture supplied by the carburetor takes place when the speed of the engine is varied.

With diffusers having a surrounding layer of a material such as wire gauze capable of retaining liquid fuel in the form of a continuous film, it has been found that when the throttle is closed the fuel tends to run away by siphon action and on occasions even to empty the fuel tank owing to the fact that the siphon action persists. Another main object is to provide means for preventing this.

A further object of the invention is to provide, in a carburetor having a pilot jet, means by which the quality and quantity of the mixture fed by the pilot jet may be controlled.

Yet another object of the invention is to provide a unitary diffuser construction containing means for supplying liquid fuel to a wire gauze or like fuel retaining surface, and also means for supplying a pilot jet of fuel and air when the throttle valve is closed.

In order that the invention may be clearly understood and readily carried into effect, two carburetors constructed in accordance therewith will now be described, by way of example, with reference to the accompanying drawings, in which

Figure 1 is a sectional elevation and

Figure 2 is a plan of one form of carburetor;

Figure 3 is a perspective view of the diffuser body (with the gauze removed) of the carburetor shown in Figures 1 and 2;

Figure 4 is a plan of another form of carburetor;

Figure 5 is a cross-section on the line VI—VI of Figure 5, and

Figure 6 is an end elevation in part section of the carburetor shown in Figures 5 and 6.

Referring to Figures 1 and 2, a cylindrical diffuser body 1 is mounted in an induction pipe consisting of two parts 2 and 3 bolted together by bolts 4. An axial bore 5 in the diffuser body, having a jet nipple 6, screwed into its lower end, is in communication through a passage 7 with a float chamber 8 containing float valve mechanism of the usual type set to maintain fuel in the axial passage 5 at a level just below passages 9 which radiate from the axial passage to the surface of the diffuser body. When the carburetor is in use and the throttle valve 10, fitted in the part 2 of the induction pipe, is open a stream of air will pass through the induction pipe from the lower end of the carburetor and fuel will be drawn along the radial passages 9 to a cylinder of copper gauze 11 which surrounds and is in contact with the vertical surface of the diffuser body. On reaching the gauze the fuel will cling to it until taken up by air passing the diffuser. A relatively large area of gauze is provided above the outlets of the radial passages 9 to hold the fuel emerging from the radial passages, the fuel being drawn along and finally taken up from the gauze by the air stream.

A circumferential groove 12 is formed upon the diffuser body 1 just above a screw-threaded extension 13 by means of which the diffuser body is mounted upon a pipe 14 projecting into the induction pipe and containing the passage 7. A somewhat smaller circumferential groove 15 is formed upon the diffuser body near its upper end. The gauze cylinder 11 is clamped to the diffuser body by means of rings of wire which press the ends of the gauze into the circumferential grooves 12 and 15. An air strangler 16 is fitted to the inlet end of the induction pipe.

Oblique passages 17 extend downwards from the radial passages 9 to the upper part of the groove 12. When the carburetor is in use and air is flowing through the induction

pipe, some of it is by-passed up the passages 17 because the pressure at the lower ends of the passages 17 is greater than that around the centre of the diffuser and because the lower orifices of the oblique passages 17 are nearly perpendicular to the direction of flow of air in the induction pipe, which air is also trapped to some extent by the groove 12 and thus directed into the passages. Holes are cut in the gauze 11 to coincide with the lower orifices of the passages 17 so that the entry of air into the passages is not obstructed. A tube 18 with bevelled ends and of length approximately equal to the effective length of the diffuser is fitted to the induction pipe so as to restrict the air stream passing the diffuser and magnify the depression round the outlets of the radial passages 9 so that when the engine is running the pressure at the lower ends of the oblique passages 17 will be greater than at the ends of the passages 9. As the throttle valve 10 is opened the quantity of air by-passed along the passages 17 increases so that the rate of increase of the quantity of fuel issuing from the radial passages 9 as the speed of the engine increases is not so great as it would be in the absence of the oblique passages and any tendency for the mixture supplied by the carburetor to become too rich is counteracted.

A circumferential groove 19 (see Figure 3) formed around the diffuser body includes all the outlets of the radial passages 9. The object of this groove is to increase the effective area of gauze in front of each radial passage. If the radial passages presented a very small cross-sectional area on the diffuser surface a small film of fuel might form over their ends which would not break down until some time after the closing of the throttle valve. In this case there would be a danger of a siphon of fuel starting, the path of the siphon being up the axial passage 5 to the radial passages 9, along the radial passages 9 to the oblique passages 17 and down the oblique passages. Such a siphon would cause the level of the float 20 to fall and more fuel to enter the float chamber 8 so that the level of the fuel in the float chamber would be kept from falling low enough to cause the siphon to stop. The siphon would only be broken when air entered one of the passages 9 and this might not occur until after a considerable quantity of fuel had flowed from the fuel tank through the carburetor to waste. The provision of the groove 19 in the diffuser body 1 ensures that any film of fuel that may form across the ends of the radial passages will be so unstable because it covers a relatively large area that it will break almost immediately after the throttle is closed and allow air to enter by the radial passages and break the siphon. The same effect can be obtained by dispensing with the groove 19 and instead countersinking the ends of each of the passages or forming longitudinal grooves at those ends.

The axial passage 5 extends to the top of the diffuser body 1 and a pilot jet nipple 20 is screwed into its upper end. A dip tube 21 extends downwards from the pilot jet nipple to a point in the passage 5 below the inlets of the radial passages 9.

A swelling 22 on the outside of the part 2 of the induction pipe has two passages 23 and 24 bored in it. These passages intersect at right angles. The passage 23 opens at its upper end into the induction pipe at a point just above the throttle valve 10 when the disc of the latter is in the position in which it closes the induction pipe. The other end of the passage 23 is screw-threaded and has a set screw 25 inserted into it. A tube 26 is inserted into the passage 24 and is held in position by the set screw 25 which bears upon part of the face of a groove 27 which is formed upon the tube 26. A slot 28 cut in the tube 26 coincides with the lower end of the upper part of the tube 23. The tube 26 carries at its inner end an extension in the form of a tube 29 fixed rigidly to it. The part of the inner surface of the tube 26 above the tube 29 is screw-threaded and a screw 30 with a knurled head and carrying a lock nut 31 is screwed into the tube 26. The tube 29 extends to the upper end of the pilot jet nipple and the lower end of the tube 29 is bevelled and placed so that the perimeter of its orifice includes the axis of the pilot jet bore.

When the engine to which the carburetor is fitted is running slowly and the throttle valve is closed, fuel will be drawn up the dip tube 21 through the pilot jet nipple and along the passages 29, 26 and 23 to the part of the induction pipe above the throttle valve. Air, entering the tube 29 between the edge of its lower opening and the pilot jet nipple, will also be drawn along the tubes 29, 26 and 23 and will mingle with the pilot jet. The quality of the slow-running mixture supplied to the engine through the tube 23 may be adjusted by first unscrewing the set screw 25, and then sliding the combined tubes 26 and 29 through the bore 24 until the lower end of the tube 29 is at such a distance from the pilot jet nipple that the desired quantity of air can enter the tube 29. When the correct position for the tube 29 has been found the tube 26 is again clamped to the induction pipe by means of the screw 25. The quantity of slow-running mixture supplied to the engine may be varied by screwing the screw 30 further into or out of the tube 26 so that more or less of the slot 28 is covered. When the throttle valve is open the pressure at the lower end of the tube 29 is almost exactly the same as that at the upper end of the tube 23 so that no fuel will be drawn from the pilot jet.

In the carburetor with a horizontal induction pipe shown in Figures 5, 6 and 7, fuel is maintained in a vertical passage 32 at a level

just below horizontal passage 33 by means of float valve mechanism in a float chamber 34. When the carburetor is in use and its throttle valve 35 is open, fuel is drawn along the horizontal passage 33 and through radial passages 47 formed in the part 36 of the diffuser. After leaving the passages 35 the fuel flows turbulently to holes 37 cut in a horizontal tube 38 and then passes through the holes 37 to gauze 39 covering the tube 38. The fuel is then taken up by air flowing past the gauze. The quality of the mixture delivered by the carburetor at high speeds is corrected by the entry of air into passages 40 formed in the part 36 of the diffuser. When the throttle valve is closed, the fuel for the slow-running mixture is supplied through a pilot jet nipple 41 and passes together with air along a tube 42 and passages 43, 44 and 45 formed in the induction pipe casting. The quality of the slow-running mixture is adjusted by sliding the tube 42 axially and the quantity is varied by turning a screw 46.

We claim:—

1. In a carburetor, in combination, a float chamber, a float valve mechanism in said chamber, an induction pipe adapted to be connected to an engine at its outlet end, a diffuser body formed with fuel distributing passages and mounted substantially coaxially within said induction pipe, a layer of liquid fuel retaining material surrounding said diffuser body and placed so as to receive and retain fuel issuing from said distributing passages, and means placing the inlet ends of said distributing passages in communication with said float chamber, said diffuser body also being formed with subsidiary internal passages leading from said distributing passages to points on the diffuser body such that they present openings adapted to collect and lead into said distributing passages air flowing along said induction pipe.

2. In a carburetor, in combination, a float chamber, a float valve mechanism in said chamber, an induction pipe adapted to be connected to an engine at its outlet end, a diffuser body formed with fuel distributing passages and mounted substantially coaxially within said induction pipe, a layer of liquid fuel retaining material surrounding said diffuser body and placed so as to receive and retain fuel issuing from said distributing passages, and means placing the inlet ends of said distributing passages in communication with said float chamber, said diffuser body also being formed with subsidiary internal passages which lead from said distributing passages in directions away from the outlet end of said induction pipe to points on the diffuser body and which terminate on said diffuser body in orifices the peripheries of which lie in planes inclined at a substantial angle to the longitudinal axis of said diffuser body, whereby said subsidiary passages are adapted readily to collect air passing through said induction pipe and lead it to said distributing passages.

3. In a carburetor, in combination an induction pipe adapted to be connected to an engine at its outlet end, a diffuser body formed with a central bore and fuel distributing passages leading therefrom and mounted substantially co-axially within said induction pipe, means for supplying liquid fuel to said bore, a layer of liquid fuel retaining material surrounding said diffuser body and placed so as to receive and retain fuel issuing from said distributing passages, a throttle valve mounted within said induction pipe between said diffuser body and the outlet end of said induction pipe, a pilot jet member mounted at the end of said bore, a dip tube extending into said bore from said pilot jet member and extending beyond the inlet ends of said fuel distributing passages, and means placing said pilot jet member in communication with the suction side of said throttle valve.

4. In a carburetor, in combination, an induction pipe adapted to be connected to an engine at its outlet end, a diffuser body formed with a central bore and fuel distributing passages leading therefrom and mounted substantially co-axially within said induction pipe, means for supplying liquid fuel to said bore, a layer of liquid fuel retaining material surrounding said diffuser body and placed so as to receive and retain fuel issuing from said distributing passages, a throttle valve mounted within said induction pipe between said diffuser body and the outlet end of said induction pipe, a pilot jet member mounted at the end of said bore, a dip tube extending into said bore from said pilot jet member and extending beyond the inlet ends of said fuel distributing passages, a tube located with its orifice adjacent said pilot jet member and adjustable in position relatively to said pilot jet member, means placing said tube in communication with the suction side of said throttle valve and means for adjustably obturating a part of the passage thus formed between the orifice of said tube and the suction side of said throttle valve so as to control the amount of pilot jet mixture passing through said pipe.

5. The combination claimed in claim 1 in which the orifice of the fuel distributing passages on the surface of the diffuser body are of larger cross-sectional area than the bores of said fuel distributing passages.

6. In a carburetor, in combination, a float chamber, a float valve mechanism in said chamber adjusted to yield within said chamber a free fuel surface at a substantially constant level relatively to said chamber, an induction pipe adapted to be connected to an engine at its outlet end, a diffuser body extending along said induction pipe a sub-

stantial difference above and below said level, said diffuser body being formed with fuel distributing passages terminating on the surface of said body in orifices of substantially larger cross-sectional area than the bores of said passages, a layer of gauze material closely embracing the major portion of said diffuser body so as to receive and retain fuel issuing from said distributing passages, and means placing the inlet ends of said distributing passages in communication with said float chamber.

In witness whereof we hereunto subscribe our names this eighth day of April A. D. 1930.

JOSEPH FREDERICK MONGIARDINO.
WILLIAM JOSEPH TURNER.