Sept. 17, 1968 R. A. W. JOHANSON ET AL 3,401,952

ANTI-TIPPING ROLLERS

Filed Sept. 21, 1966

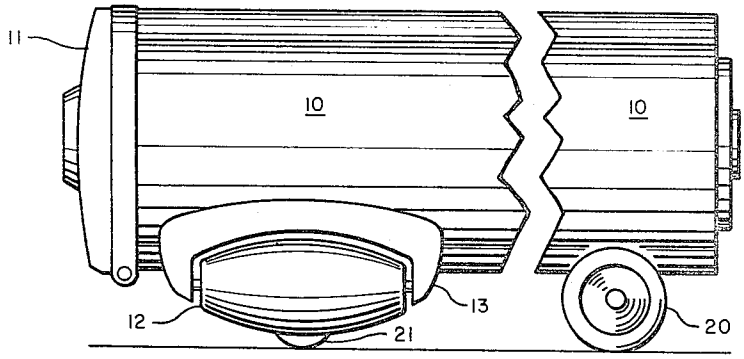

Fig. 1

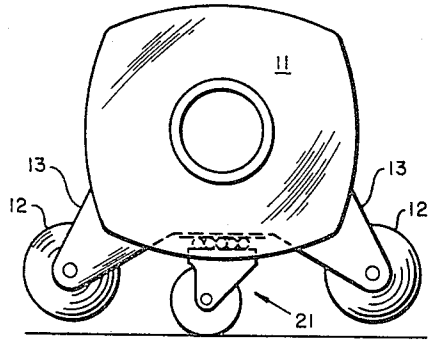

Fig. 2

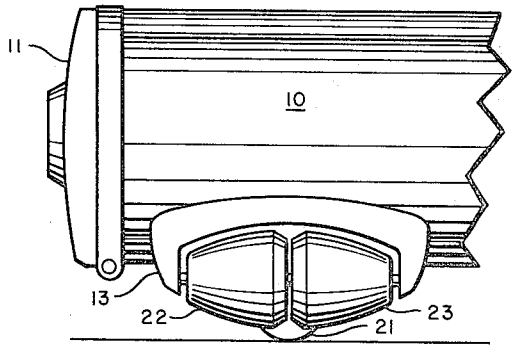

Fig. 3

INVENTOR.
RALPH A. W. JOHANSON
JACQUES L. LE BAIGUE
BY Thomas G. Battle
William S. Henry

United States Patent Office

3,401,952

Patented Sept. 17, 1968

3,401,952

ANTI-TIPPING ROLLERS

Ralph A. W. Johanson, Armonk, and Jacques L. Le Baigue, Westbury, N.Y., assignors to Electrolux Corporation, Old Greenwich, Conn., a corporation of Delaware

Filed Sept. 21, 1966, Ser. No. 581,073

3 Claims. (Cl. 280—150)

ABSTRACT OF THE DISCLOSURE

A vacuum cleaner having a castered wheel at one end and a pair of side wheels at the other end for movement of the cleaner as it is pulled from place to place via the suction hose. In addition an outrigger is provided having a pair of longitudinally extending elliptically shaped rollers which are attached to the cleaner body adjacent to the castered wheel to prevent tipping of the cleaner without impeding its movement.

Our invention relates to a vacuum cleaner of the tank type and in particular to anti-tipping rollers for such apparatus.

The primary object of our invention is to provide a tank type vacuum cleaner housing with rollers to prevent a cleaner of this type from tipping when pulled sidewise, or at any angle, and which is attractive as well as functional.

The foregoing object and advantages as well as further objects and advantages will become apparent from the attached drawing in which:

FIG. 1 is a partial schematic side elevation of a vacuum cleaner provided with the anti-tipping rollers according to one embodiment of our invention;

FIG. 2 is an end view looking from left to right in FIG. 1; and

FIG. 3 is a partial schematic side elevation of another embodiment of our invention.

In FIGS. 1 and 2 reference numeral designates the body of a tank type vacuum cleaner which houses a dust bag and motor-fan unit as is well known and therefore not shown. Each end of the body **10** is provided with appropriate fittings for connecting various tools to the cleaner. The end fitting **11** is adapted to receive a hose, the other end of which is connected to a floor cleaning tool as is well known. In use, the floor cleaner tool is moved about and the cleaner is subject to side pulls which cause the cleaner to tip over. To prevent this in accordance with our invention a pair of rollers **12** are pivotally suspended at each side of the body on outriggers **13** which are placed near the end of the body having

the fitting **11**. The rollers **12** are preferably generally elliptically configured so that they will not impede movement of the clean when pulled forwardly and sidewise simultaneously.

Normally the cleaner body **10** is supported to the pair of rear wheels **20** and a caster **21** attached to the cleaner body between the anti-tip rollers **12** in a vertical plane coincident with the longitudinal axis of the body **10**. The caster **21** is pivotal through 360° by an suitable means such as a ball bearing assembly.

In the embodiment shown in FIG. 3, a pair of discrete rollers **22** and **23** are independently journaled in the outriggers **13** in place of a single roller as shown in FIGS. 1 and 2. In each embodiment shown in the drawing the outriggers are placed on the body to support the rollers spaced slightly above the floor.

It will be apparent that the rollers **12** or **22**, **23** may be utilized without the use of a caster **21** which is preferred however. Other variations will be apparent also and therefore the foregoing description is not to be taken as limiting the scope of the sub-joined claims.

What is claimed is:

1. The combination with a vacuum cleaner of anti-tipping means; said means comprising outrigger means attached to said vacuum cleaner body in a horizontal plane in the normal operating position of said body, and generally elliptical roller means at each side of said body and journaled in said outrigger member and having their axes of rotation parallel with the longitudinal axis of said vacuum cleaner; a caster attached to said body for 360° of relative rotation and being located on said body between said rollers; said caster being dimensioned to support said body with said rollers spaced from the floor when said body is in said normal operating position.

2. The combination according to claim **1** wherein said generally elliptical roller means comprises a pair of discrete semi-elliptical rollers each of which is separately journaled in each said outrigger members.

3. The combination according to claim **2** with the addition of a wheel on each side of said body adjacent the end thereof remote from said rollers.

References Cited

UNITED STATES PATENTS

2,088,236	7/1937	Faber	280—62
2,095,942	10/1937	Wetterstrand	280—11.23
2,817,540	12/1957	Pawsat	280—293

FOREIGN PATENTS

475,792	8/1951	Canada.

BENJAMIN HERSH, *Primary Examiner.*

R. SONG, *Assistant Examiner.*