May 3, 1955 W. L. WELLS 2,707,636

PIN CHANGING APPARATUS FOR BOWLING PIN SETTING MACHINES

Filed March 24, 1948 6 Sheets-Sheet 1

FIG. 1

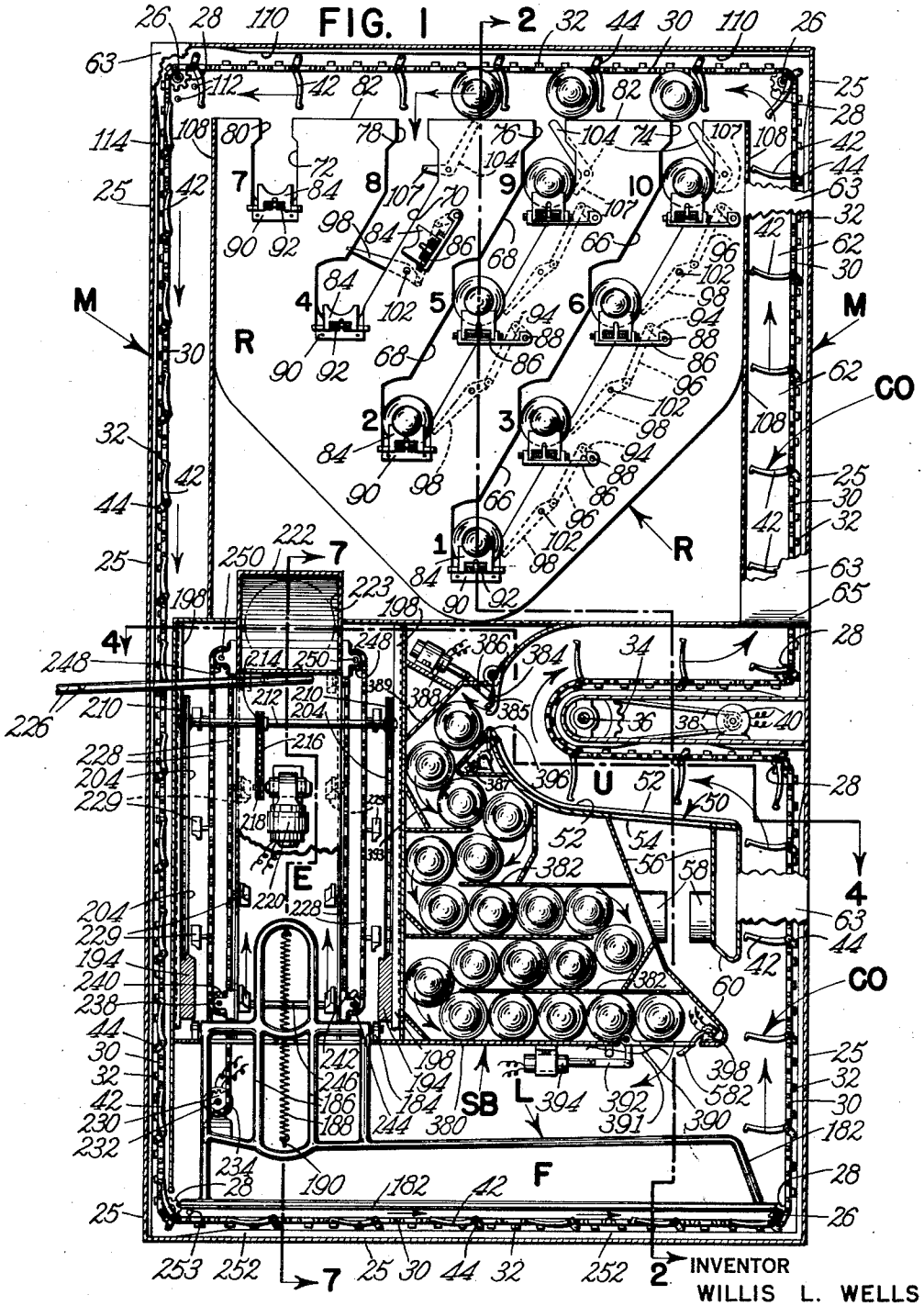

INVENTOR
WILLIS L. WELLS
BY Wentworth B. Clapham
ATTORNEY

May 3, 1955 W. L. WELLS 2,707,636

PIN CHANGING APPARATUS FOR BOWLING PIN SETTING MACHINES

Filed March 24, 1948 6 Sheets-Sheet 2

FIG. 2

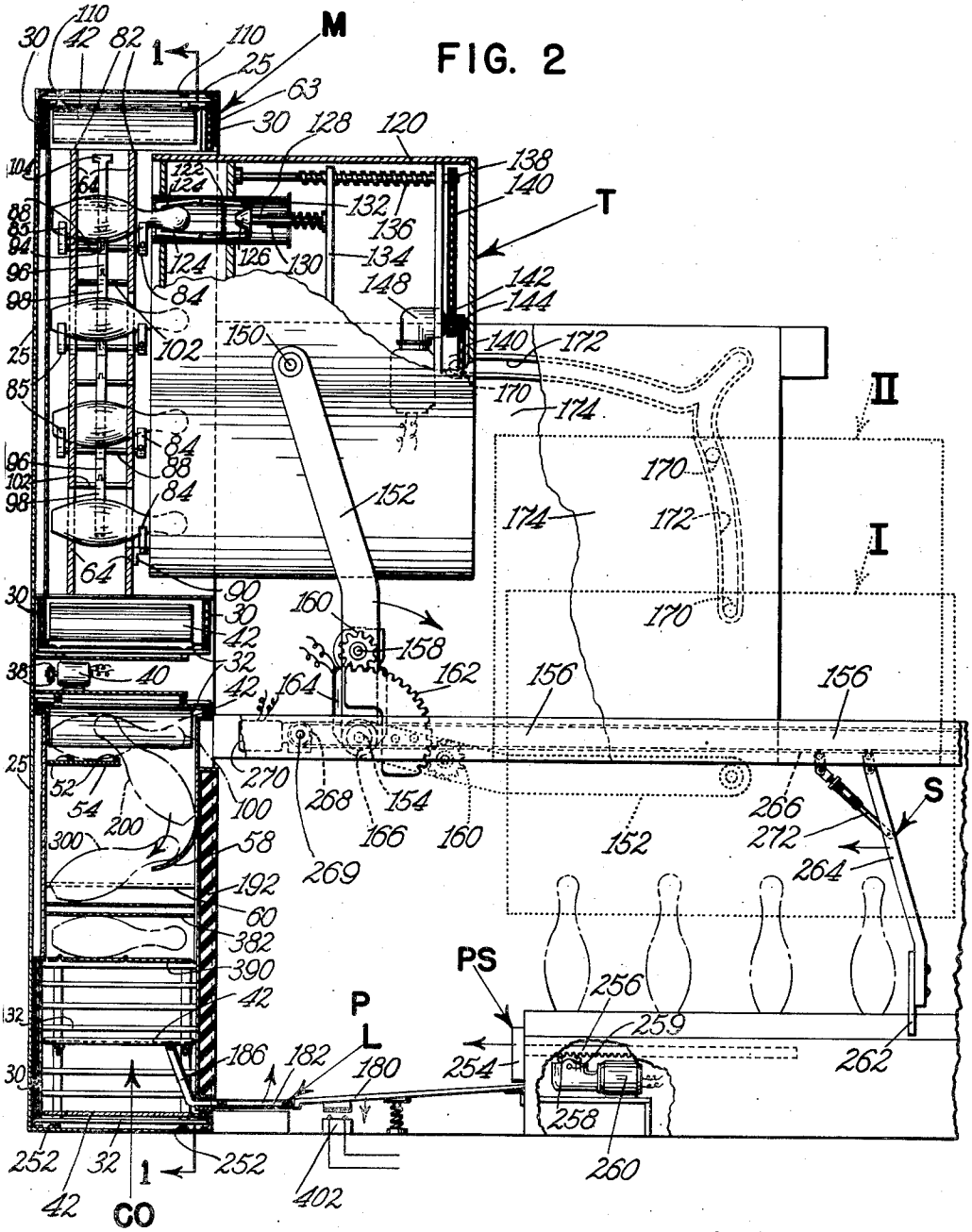

INVENTOR
WILLIS L. WELLS
BY Wentworth B. Clapham
ATTORNEY

May 3, 1955 W. L. WELLS 2,707,636

PIN CHANGING APPARATUS FOR BOWLING PIN SETTING MACHINES

Filed March 24, 1948 6 Sheets-Sheet 3

FIG. 3

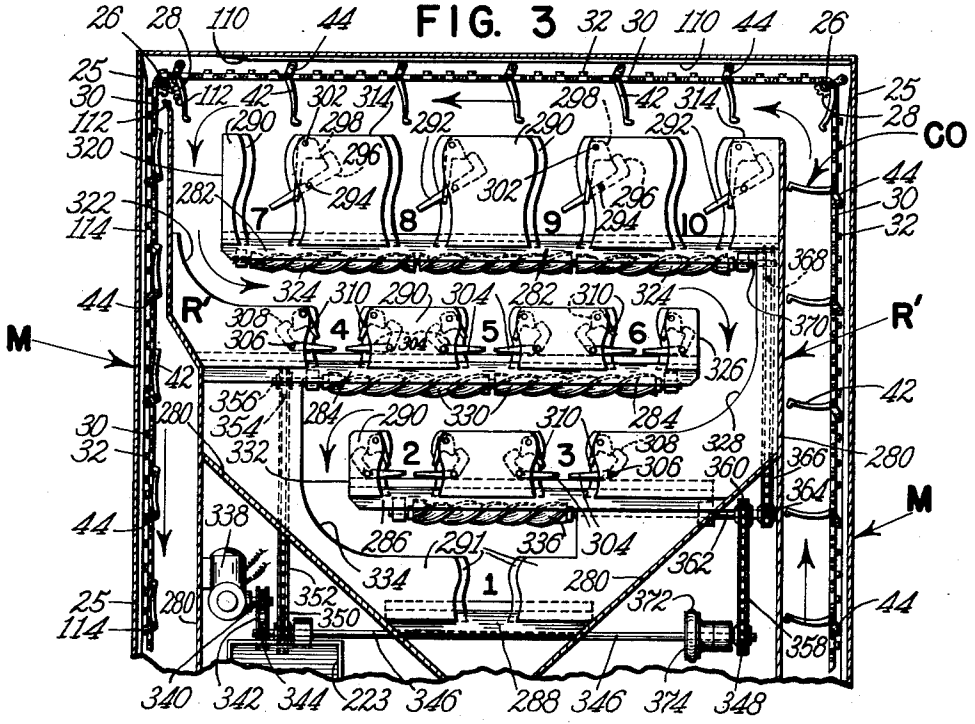

FIG. 4

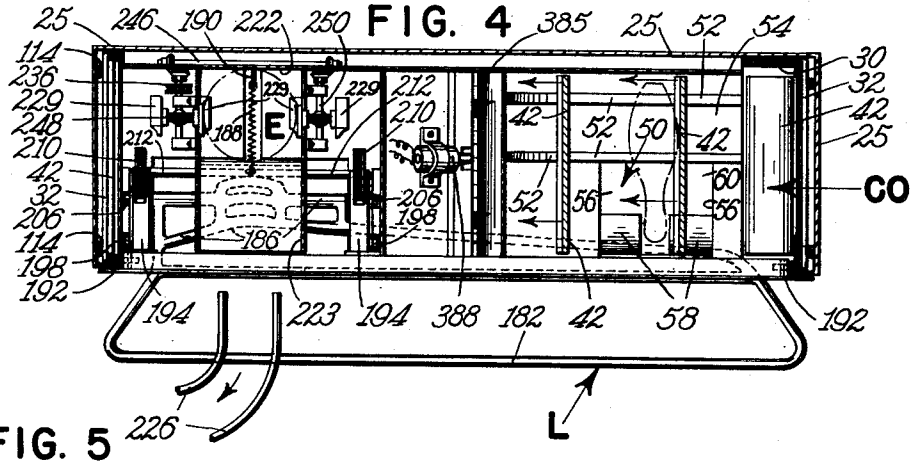

FIG. 5

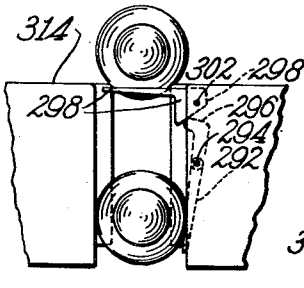

FIG. 6

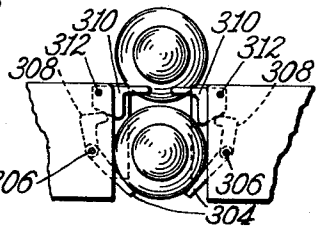

INVENTOR
WILLIS L. WELLS
BY Wentworth & Clapham
ATTORNEY

May 3, 1955 W. L. WELLS 2,707,636

PIN CHANGING APPARATUS FOR BOWLING PIN SETTING MACHINES

Filed March 24, 1948 6 Sheets-Sheet 4

FIG. 7

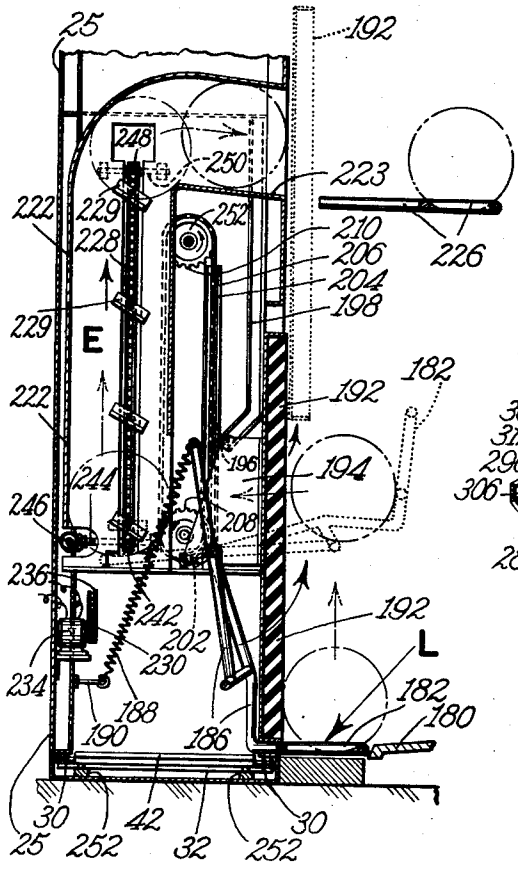

FIG. 8

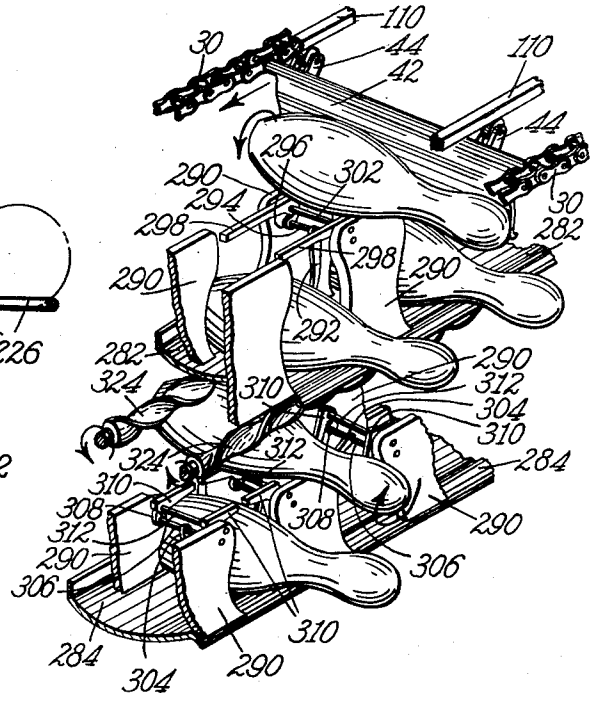

FIG. 9

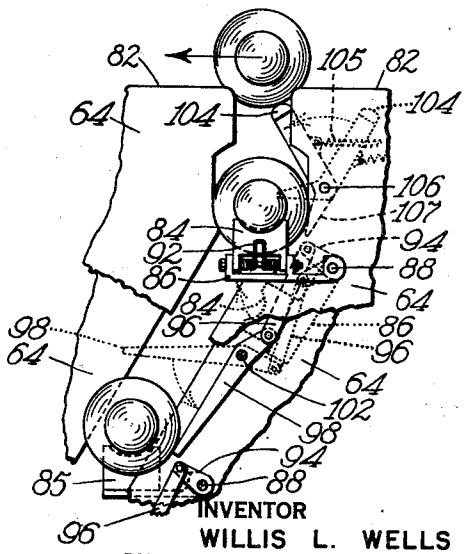

INVENTOR
WILLIS L. WELLS
BY Wentworth B. Clapham
ATTORNEY

May 3, 1955 W. L. WELLS 2,707,636

PIN CHANGING APPARATUS FOR BOWLING PIN SETTING MACHINES

Filed March 24, 1948 6 Sheets-Sheet 5

FIG. 13

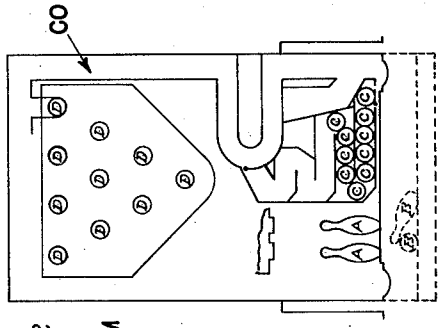

FIG. 12

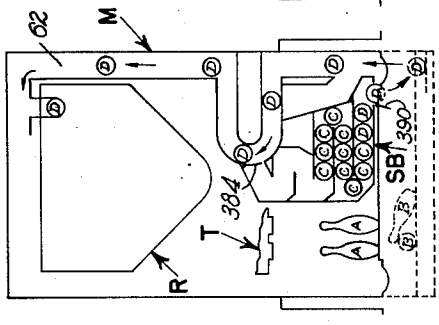

FIG. 11

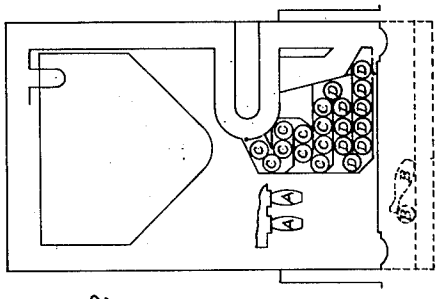

FIG. 10

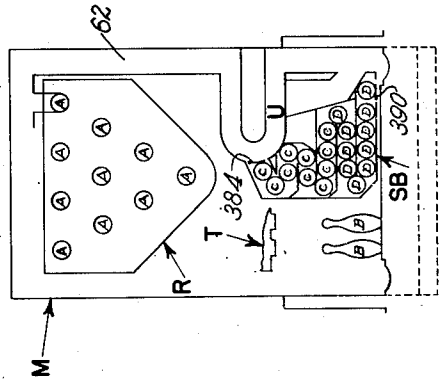

FIG. 17

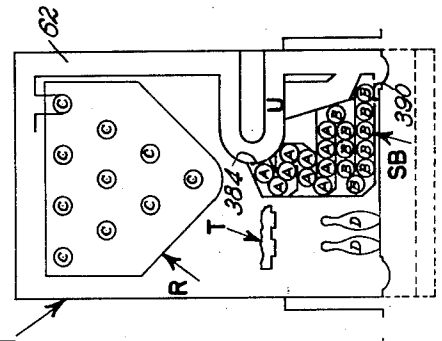

FIG. 16

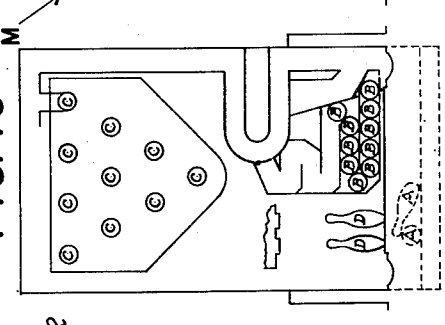

FIG. 15

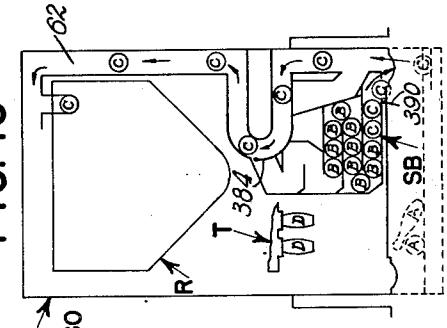

FIG. 14

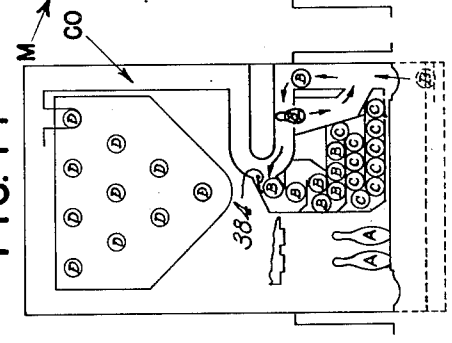

INVENTOR
WILLIS L. WELLS
BY Wentworth B. Clapham
ATTORNEY

May 3, 1955 W. L. WELLS 2,707,636

PIN CHANGING APPARATUS FOR BOWLING PIN SETTING MACHINES

Filed March 24, 1948 6 Sheets-Sheet 6

FIG. 19

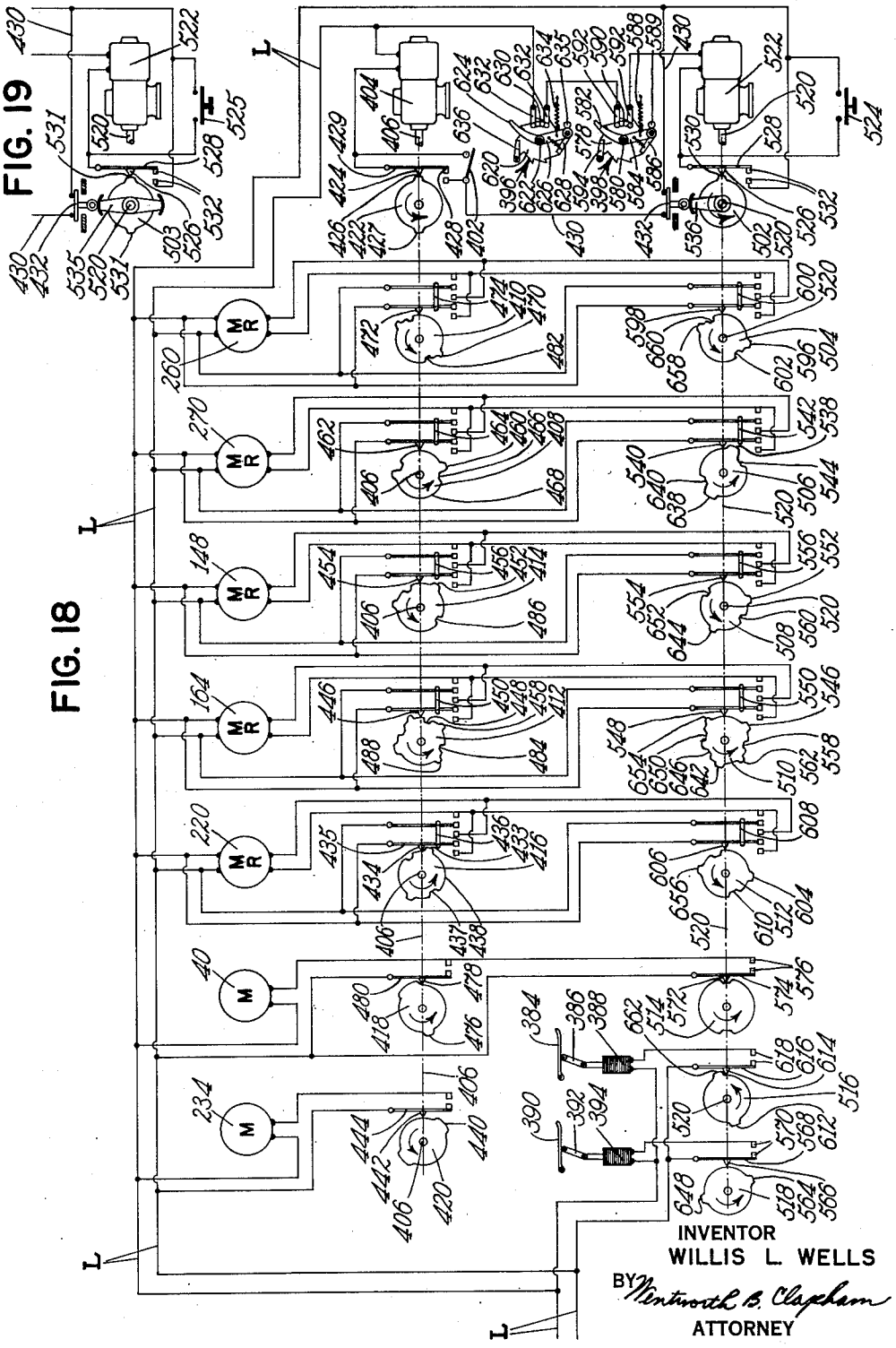

FIG. 18

INVENTOR
WILLIS L. WELLS
BY Wentworth B. Clapham
ATTORNEY

United States Patent Office

2,707,636

Patented May 3, 1955

2,707,636

PIN CHANGING APPARATUS FOR BOWLING PIN SETTING MACHINES

Willis L. Wells, St. Louis, Mo., assignor, by mesne assignments, to American Machine and Foundry Company, New York, N. Y., a corporation of New Jersey

Application March 24, 1948, Serial No. 16,725

9 Claims. (Cl. 273—43)

This invention relates to bowling pin spotting machines and more particularly to improvements in machines for automatically spotting and respotting pins on the playing bed of a bowling alley, and interconnected and cooperating mechanisms for controlling the operation of the machine to effect the necessary handling of pins incident to their removal from the pit of a bowling alley and replacement in playing arrangement on the playing bed.

Problems encountered in the design and construction of the bowling pin spotting machines are those of reducing weight, simplifying their design, and providing mechanism which will handle bowling pins efficiently and with a minimum of wear and tear.

The present invention relates to a machine which is lighter in weight, relatively simple in design, and easy to control. The pins handled are subjected to less wear and tear on removal from the pit of the alley and on being delivered to the necessary pin spotting mechanism. The ball, also, is handled by improved mechanism which tends to substantially reduce or eliminate chipping and unnecessary wear in its removal from the pit and delivery to the player.

The invention solves the problem of distributing pins in a simple and expeditious manner into triangular arrangement for delivery by the spotter onto the playing bed of the alley. This is accomplished by providing a substantially vertically positioned pin magazine having triangularly arranged pin supporting stations corresponding with the positions normally occupied by standing pins on the alley. A conveyor, which receives the pins in the pit of the alley, is responsible for the delivery of the pins into the several stations in the magazine where they are positioned in substantially horizontal arrangement, one above the other, with their handle ends projecting outwardly from the magazine. A pin spotter provided with triangularly arranged gripping members is moved into position adjacent the magazine. The members grip the handle ends of a set of pins in the magazine after which the spotter moves away from the magazine and in so doing, the pins are moved thereby horizontally out of the magazine and delivered in proper playing position onto the playing bed of the alley.

It is an object of the invention to provide an improved bowling pin spotting machine which is relatively simple in construction and capable of handling pins with a minimum of wear and tear, thereby increasing the life of each pin handled by the several pin engaging parts of the machine.

The invention also consists in improved pin conveying mechanism which is so arranged that the several flights thereof which raise and move pins through the machine are positioned progressively in the form of a substantially horizontal moving conveyor floor onto which pins are delivered from the pit, and which are constrained to travel vertically upwardly in spaced substantially horizontal arrangement to lift pins one by one and deliver them in succession into triangularly arranged pin supporting stations.

A further object of the invention is to provide improved handling mechanism including an endless conveyor having a substantially rectangular path of movement such that during a portion of the travel of the conveyor, it forms a substantially horizontal traveling pin supporting floor and during a further portion of its travel, conveys bowling pins one by one vertically upwardly and delivers them selectively to either a pin triangularizing magazine or to a pin storage device.

The invention also consists in the provision of pin orienting mechanism wherein pins are turned end for end and arranged properly for delivery into the pin triangularizing magazine.

With these and other objects not specifically mentioned in view, the invention consists in certain combinations and constructions which will be hereinafter fully described, and then set forth in the claims hereunto appended.

In the accompanying drawings, which illustrate preferred embodiments of the invention and form a part of the specification, and in which like characters of reference indicate the same or like parts:

Figure 1 is a sectional front elevation—taken on line 1—1 of Figure 2—illustrating a preferred form of triangularizing pin magazine, and pin and ball elevating mechanisms;

Figure 2 is a sectional side elevation—taken on line 2—2 of Figure 1—illustrating the pin magazine in conjunction with a pin spotting table, and means for sweeping the pins from an alley bed into a pit from which the pins are conveyed into the pin magazine;

Figure 3 is a partial sectional front elevation of the pin magazine showing a modified form of construction of the triangularizing section of the pin magazine;

Figure 4 is a sectional plan view—taken on line 4—4 of Figure 1—illustrating the ball elevator, and a portion of the pin conveyor of the magazine;

Figures 5 and 6 are front elevations of two modified pin stations of the triangularizing rack of the pin magazine;

Figure 7 is a sectional side elevation of the ball elevating and return mechanism;

Figure 8 is a perspective view showing a portion of the modified form of construction of the triangularizing section of the pin magazine illustrated in Figure 3;

Figure 9 is a partial front elevation of the preferred form of the triangularizing rack section of the magazine illustrating the delivery of the pins to various pin stations;

Figures 10 to 17 are schematic front views of the pin magazine illustrating the successive steps in the sequence of operations involved in automatically transferring two sets of pins in storage from the storage bin to the triangularizing or rack section of the magazine and to the alley bed, and depositing two sets of pins in use from the rack section of the machine and the alley bed into the storage bin;

Figure 18 is a wiring diagram illustrating a suitable electrical control mechanism necessary to effect a normal operation of the machine, as well as a changing of pins in the same;

Figure 19 is a view of a modified control which can be used with the circuit shown in Figure 18 to change single sets of pins.

The bowling pin setting machine selected for purposes of illustration, consists chiefly of a magazine M, a pin setting table T, an alley sweep S and a pit sweep PS. Within the magazine M, are arranged a pin conveyor CO, a triangularizing or rack section R, a ball lift L, a ball elevator E, and a pin storage bin SB.

The magazine M consists of an upright rectangular housing or frame 25 which at its four corners carries a

number of suitably mounted studs **26** on each of which are loosely mounted pairs of spaced sprockets **28** on which run two spaced endless chains **30** which form part of the pin conveyor CO. Chains **30** are connected by means of equally spaced bars **32** and are driven by a pair of sprockets **34** mounted on a shaft **36** supported by suitable bearings attached to magazine housing **25**. Shaft **36** is driven by means of a suitable pulley (not shown) attached thereto through a belt **38** from a pin conveyor drive motor **40**. A number of pivotally mounted cradles or flights **42** are equidistantly spaced along chains **30** (Fig. 1), and each flight is provided with a pair of guide shoes **44** employed for positioning the several flights properly when passing through the various sections of the magazine M, as described hereinafter. Flights **42** convey pins from lower chamber F (Figures 1 and 2) of magazine M, into which the pins are delivered by pit sweep PS, to the triangularizing or rack section R. While passing through the lower chamber F, flights **42** together with chains **30** and bars **32**, form a more or less horizontal moving band conveyor or moving floor onto which the pins are deposited by pit sweep PS. As the chains turn the right lower corner of magazine M, and move vertically upward (Fig. 1), each flight on which a pin is resting carries it upward, the latter resting in a horizontal position thereon.

Since it is necessary that all pins delivered into the triangularizing or rack section R protrude with their heads in a forward direction toward the pin supporting bed of the alley, all pins conveyed by flights **42** must also lie with their heads or handle ends forward. If a pin comes to rest on a flight **42** in a butt end forward direction, such pin must be oriented or have its position changed to a head forward direction before reaching the rack section R. The necessary change in direction or orientation of pins can be effected by causing pin conveyor CO to move through a horizontal, substantially U-shaped loop channel U (Fig. 1). While passing through the lower portion of channel U, flights **42** assume a vertical position, such that a pin engaged by a flight is rolled or pushed in a barrel-like fashion substantially horizontally over the bottom portion designated generally **50**. Bottom portion **50** is provided with a pair of suitably spaced guide rails **52** employed for the purpose of facilitating the rolling of the pins and assuring their horizontal movement. The bottom portion **50** of the channel is so designed as to provide a narrow bridge plate **54** (Figures 1 and 2) which bridges the rear portion of a chute **56**. The latter is equipped with a pair of spaced suitably curved pin reversing plates **58** and, on its bottom portion, provided with an opening **60** leading to the ascending section of pin conveyor CO. All pins which are lifted from the lower chamber F by flights **42**, and are conveyed upwardly thereby in a head forward position, are easily and safely rolled or pushed over the narrow bridge plate **54** as illustrated in broken lines by pin **100** in Figure 2. If, however, a pin is moved into channel U in a butt-end forward position, it will, upon reaching bridge plate 54, because of the position of the center of gravity thereof, tumble over the edge of plate **54** and slide down chute **56**, as illustrated in broken lines by pin **200** in Figure 2. The butt end of such falling pin will strike pin orienting or reversing plates **58** with the effect of being guided into a head forward position, as illustrated by pin **300** in Figure 2. This properly oriented pin then falls through opening **60** of chute **56** onto one of the ascending flights **42**. In case one of the ascending flights already carries a pin, then the just oriented pin is simply pushed aside by the ascending pin and cannot fall onto a flight until an empty flight passes opening **60**. After successfully passing the lower portion **50** of the U-shaped channel, pins are guided through the upper portion of the U-shaped channel. As each flight **42** leaves channel U, it assumes a generally horizontal position and supports the pin which it has been pushing through the channel. These pins are then carried upwardly through a vertical channel **62**, formed by the side of rack housing **108**, and the back and side of magazine housing **25**, to the triangularizing or rack section R of the magazine. A plate **63**, provided with a curved portion **65** at its bottom end, extends upwardly along channel **62** and transversely across the top of the machine, as shown in Figure 2. Curved portion **65** tends to push any pin on a flight into proper position therein. If a pin is not located centrally on a flight **42**, as it is moved thereby upwardly into vertical channel **62**, the outwardly projecting end of such pin engages curved portion **65** and is pushed thereby rearwardly on the flight **42** which is supporting it into proper centered position. Plate **63** maintains pins in proper position on flights **42** during the lifting movement and the rolling movement thereof along the top of rack R.

The preferred form of rack section R consists chiefly of two properly spaced, vertically mounted plates **64** (Figures 1 and 2), which are provided with ten pin locating or supporting stations **1** to **10** which form the same pattern and correspond exactly with the ten pin locating spots on the bowling alley bed. While ten stations are shown, obviously more or less could be provided to meet change of rules in the game. In facilitating the delivery of pins to the pin locating stations, several stations are connected by a common feed channel. Plates **64** are provided with four feed channels, namely, **66**, **68**, **70** and **72**, each of which has an opening **74**, **76**, **78** and **80** respectively, leading to the top edges **82** of plates **64**. The design of the rack section R is such that feed channel **66** connects and serves pin stations **1**, **3**, **6** and **10**; feed channel **68** serves pin stations **2**, **5**, and **9**; channel **70** serves pin stations **4** and **8**, and channel **72** serves pin station **7**. Each of the ten stations with the exception of stations **1**, **2**, **4** and **7**, is provided with a pin arresting mechanism which consists of a pair of pin supporting lugs **84**, **85** employed for the purpose of supporting the head and bottom portion of the pin in substantially horizontal position. Each pair of lugs **84**, **85** consists of a rigidly mounted rear lug **85** and a hinge mounted front lug **84**. Each lug, with the exception of the lugs for stations **1**, **2**, **4** and **7**, is attached to a narrow arm **86** for pivotal movement about a horizontal pivot. Each pair of arms **86** is mounted on a shaft **88** pivotally supported by plates **64**. Since stations **1**, **2**, **4** and **7** are located at the bottom of feeding channels **66**, **68**, **70** and **72** respectively, no rear pin supporting lug is necessary, but the bottom of each feeding channel in the rear plate is so formed as to provide a proper support for the bottom portions of the pins coming to rest in said stations. The front lugs **34**, which support the neck portions of pins in stations **1**, **2**, **4** and **7**, are hinge mounted on horizontal pivots in brackets **90** secured to the front side of the front plate **64**. All front supporting lugs **84**, in addition to being hinge mounted, are also equipped with a suitable tension spring **92**, which normally biases them to vertical position, but yields to permit forward tilting of lugs **84** when a set of horizontal pins is extracted from rack R. On each shaft **88** is mounted a lever **94** (Figures 1 and 9) which by means of a link **96** is connected to a trip or control arm **98**, each of which is pivoted on a shaft **102** supported by plates **64**. Near the top portion of each of the feed channel openings **74**, **76** and **78**, is located a bell crank-shaped, spring-mounted check arm **104**, each of which is pivoted on a horizontal shaft **106** supported by plates **64**. Arms **104** are so designed that the lower portion **107** extends into pin locating stations **8**, **9** and **10**, respectively, when these stations are empty. As soon as a pin occupies one of these stations and presses downwardly against portion **107**, the upper free end of the respective arm **104** is moved into a position such that it closes the

upper opening of the respective feed channel and thereby prevents any successive passing pin from entering the same. Each arm **104** is provided with a tension spring **105** (Figure 9), employed for the purpose of preventing it from projecting into the feed channel when no pin is in its station.

The triangularizing or pin rack section R operates as follows: As pins carried by flights **42** of pin conveyor CO reach the top of channel **62** and adjacent to the top edge of the pin rack housing **108**, pin conveyor CO turns and moves in a horizontal direction, thereby causing flights **42** to assume a substantially vertical position. All pins which had been lifted by flights **42** are now pushed or rolled along the top edges of spaced plates **64** (Figure 1). As the conveyor chains **30** move horizontally, the cradles **42** are held vertical by means of their respective guide shoes **44** contacting suitable guide rails **110** secured to the top plate of housing **25** (Figure 1). When rack R is empty, the first pin rolled along top edges **82** of plates **64** will, upon reaching opening **74**, due to its own weight, drop therethrough into feed channel **66** and come to rest at station **1**, where it is held in the proper horizontal position by the pin supporting lug **84**, and the rear channel plate **64** of this particular station, described heretofore. On its way to station **1**, the falling pin, of course, passes stations **3**, **6** and **10**, thereby temporarily depressing control arms **98** for the stations **6** and **10**, and also check arm **104** at station **10**, which momentarily effects a closing of opening **74** of feed channel **66**. Upon reaching station **1**, however, this pin depresses control arm **98** of station **3**, which remains depressed so long as this pin remains in station **1**. The depressing of this control arm **98** through link **96** and lever **94** causes levers **86** to swing supporting lugs **84**, **85** of station **3** into operative pin supporting position in feed channel **66**, so that the next pin dropping through opening **74** into feed channel **66** comes to rest and is positioned properly thereon at station **3**. The second pin arrested at station **3** in turn keeps the control arm **98** of station **6** in a depressed position which causes pin supporting lugs **84**, **85** of station **6** to swing into and remain in operative pin supporting position in feed channel **66**. The third pin dropping into feed channel **66**, therefore, comes to rest on these lugs at station **6**, which in turn keeps the control arm **98** for station **10** in a depressed position, thereby effecting a raising and locking of the pin supporting lugs **84**, **85** at station **10** into the feed channel **66**, so that the fourth pin dropping into feed channel **66** comes to rest on said lugs of station **10**. The fourth pin deposited in station **10**, however, by engagement with arm portion **107**, also causes the upper portion of check arm **104** to move into the center portion of the opening **74** of feed channel **66**, thereby closing it and guiding any following pin, arriving at said opening, over the same and preventing any further pin from entering feed channel **66** (Figure 9). Since the opening **74** of channel **66** is thus closed, the following pins are moved by flights **42** along spaced edges **82** farther until they reach opening **76** of feed channel **68** where they drop into stations **2**, **5** and **9** respectively in the same manner as the first four pins dropped into stations **1**, **3**, **6** and **10**. The dropping of a pin in station **9** causes check arm **104** guarding opening **76** of channel **68** to swing into channel closing position in opening **76**, thus preventing more pins from entering feed channel **68**. Any following pins therefore are guided over the openings **74** and **76** to the edge of the opening **78** of the feed channel **70** which accommodates stations **4** and **8**. After two pins drop through opening **78** into feed channel **70** in a manner similar to that described heretofore, stations **4** and **8** are filled and opening **78** is closed by means of the check arm **104** held in the center portion of said opening by the pin deposited in station **8**. The remaining pin forwarded by the pin conveyor is guided over the closed openings **74**, **76** and **78** to the opening **80** of feed channel **72**, the bottom of which forms the station **7**. After the last pin is delivered to station **7**, the loading of the triangularizing pin rack is completed; triangularized pins held therein are ready to be transferred by a suitable pin spotter to the alley. Since the pin delivered to station **7** is the last of the ten pins elevated by the pin conveyor during any cycle, the opening **80** does not need a check arm as employed at the other openings **74**, **76** and **78**, and none is provided.

Stations **1** to **10** in the pin rack R are arranged in the same manner and conform with the same pattern in which the pins are placed on the alley bed, i. e. station **1** corresponds with pin 1 on the alley, stations **2** and **3** correspond with pins 2 and 3, etc. After passing over the top of the pin rack section R, pin conveyor CO makes a turn and moves vertically in a downward direction as indicated by the arrow in Figure 1. To save space and to move flights **42** to a pin receiving position when arriving at the bottom of housing **25**, the flights, upon leaving the top portion of said housing, are moved or swung about their pivots from a vertical hanging position to a position where, in conjunction with bars **32** on chains **30**, they form an almost flat conveyor band. The position of the flights or cradles **42** is changed by means of two studs **112** secured to the rear wall of housing **25** and protruding into the path of the cradles at the upper left turning corner of the conveyor chains **30**. After flights **42** have been turned, guide shoes **44** of each flight engage with vertical guide bars **114** attached to the inner wall of housing **25**.

The pin setter table T (Figure 2) employed for the purpose of transferring the pins from the triangularizing pin rack R to the alley, consists of a suitable housing **120** in which are rigidly secured ten cylinders **122** arranged in the same manner and triangular pattern as the stations **1** to **10** in the pin rack R which correspond with the spots on the alley on which the bowling pins are placed. Since all cylinders **122** are identical in construction and operation, it is considered that a description of one will suffice for all. Each cylinder **122** carries a plurality of spring mounted gripper arms **124** which at one end suitably engage a cone shaped gripper actuating member **126** which is attached to one end of a rod **128** suitably supported in a sleeve or hub **130** mounted on a cylinder cover plate **132** which may form an integral part of cylinder **122**. The other end of rod **128** is fastened to a plate **134** which at several suitable points engages with a number of threaded spindles **136**, the ends of which are supported in bearings on suitable ribs or plates which may be an integral part of table housing **120**. Each spindle **136** has secured to one end a sprocket **138**, each of which by means of a chain **140**, is connected to a sprocket **142**, all of which are mounted on a shaft **144** protruding from a suitable reversible gear reduction motor **148** suitably secured within the table housing **120**. It may be readily understood that the turning of spindles **136** through motor **148** causes plate **134** to move towards or away from the cylinder cover plates **132**, which in turn moves each cone shaped member **126** on rod **128** in each cylinder towards or away from the ends of its respective gripper arms **124** thus effecting a gripping or releasing action of said gripper arms **124** in each cylinder **122**.

Table T is provided with a pair of studs **150** (Figure 2) swingably supported in a pair of arms **152** pivotally mounted on a horizontal transverse shaft **154** supported at each end in suitable bearings of two frame members **156**, each of which is mounted on the upper portion of the inner wall of one of the bowling alley kickbacks. Arms **152** also carry a transverse shaft **158** to which, at each end adjacent the outside of each arm, is mounted a gear **160**. Gears **160** engage with stationary gear segments

162, each of which is rigidly secured to the inner side of its respective frame member 156. Shaft 156 is rotated either clock or counterclockwise by one, or preferably two, reversible gear reduction motors 164, mounted on a sleeve bracket 166 loosely supported by transverse shaft 154. It may be readily seen that a clockwise rotation of shaft 158 causes gears 160 to move downwardly on the stationary gear segments 162, thus effecting a downward movement of arms 152 and consequently of pinsetter table T towards the alley bed, while a counterclockwise rotation of shaft 158 effects a raising of table T away from the alley bed.

Since the triangularized pins in pin rack section R are arranged in a horizontal position, but have to be placed on the alley in a vertical or upright position, table T, in effecting the necessary transfer, is turned 90° by means of a pair of guide rollers 170, each of which is pivotally mounted on the exterior walls of table housing 120. Each roller 170 runs in a cam track 172 of a vertical cam plate 174 mounted on the inner side of the frame member 156. After a set of ten pins has been transferred by table T from rack section R to the alley bed, table T rises from its lowermost position I indicated in dotted lines (Figure 2) to a dwell position II about the alley and remains in this dwell position until the player has thrown a ball.

After a ball is thrown by the player, it rolls from an inclined platform 180 in the pit P onto a ball lift L (Figures 1, 2, 4 and 7) consisting of a rack 182 pivotally attached to a pair of lugs 184 mounted on a suitable frame within magazine M. The rack 182, which in the illustrated embodiment is made of tubular members, is so constructed as to provide an inclined transverse runway which leads into a delivery cradle consisting of tubular member 186 secured substantially at right angles to tubular rack 182, therefore, any ball rolling into any portion of tubular rack 182 will thus gravitate to the junction of member 186 and rack 182. Adjacent one end of member 186 is attached one end of a tension spring 188. The other end of spring 188 is secured to a stud 190 (Figure 7) held by a suitable frame member of magazine M. Ball lift L is held at the bottom of pit P by the lower edge of a vertical backstop or pit cushion 192 secured to a pair of supporting brackets 194 (Figure 7). At the upper corner of each bracket 194 is pivoted a roller 196 running in a vertical cam track or guide channel 198 suitably secured to frame plates within the magazine housing 25. The lower corner of each bracket 194 is attached to a stud 202 which is an integral part of an endless chain 204, and which also carries a roller engaging in a vertical cam track 206. Both chains 204 are led over a pair of idler sprockets 208 and are driven or reciprocated by a pair of sprockets 210 mounted on a horizontal drive shaft 212 carrying a sprocket 214 (Figure 1) which is oscillated through a chain 216 running on a sprocket 218 mounted on a shaft projecting from a reversible reduction gear motor 220 suitably mounted on the outside wall of ball elevator housing 222. The machine is timed in such a manner that, as soon as a ball comes to rest in the rack 182, a motor 220 actuates the driving sprockets 210 to move the endless chains 204 in counter-clockwise direction, thereby effecting a raising of the cushion 192 in the manner described above. The raising of cushion 192 in turn effects a release of ball lift L, which, due to the action of tension spring 188, is swung to the position indicated in dotted lines in Figure 7. Thus, since cushion 192 has continued its upward travel, the rocking movement of ball lift L causes a ball to roll onto member 186 and into or onto the ball elevator E, which elevates the ball in the elevator housing 222, and conveys it to a delivery chamber 223 formed in the top portion of housing 222. Chamber 223, of course, is closed so long as cushion 192 is in its uppermost position, indicated in dotted lines in Figure 7, but as soon as the reversible motor 220 turns sprockets 210 in a clockwise direction, cushion 192 moves down again, permitting the ball to roll by gravity from exit chamber 223 onto a suitable transverse ball return runway 226 (Figures 1, 4 and 7) which delivers the ball onto a conventional return runway.

The ball elevator E (Figures 1, 4 and 7) consists of a pair of endless chains 228, each of which carries a plurality of suitably mounted, equally spaced ball supporting lugs 229 which are so arranged and positioned that each pair of opposing lugs 229 on the opposing chains forms a cradle for a ball to be lifted. Each pair of opposing lugs 229 projects through suitable vertical slots in spaced side walls of elevator housing 222, thus confining the ball during elevation in the space formed by two opposing lugs 229. As shown, the ball engaging portion of each lug is curved in order to conform to the curvature of a ball, and prevent damage thereto.

The elevator chains 228 are driven by means of a sprocket 230 on shaft 232 of motor 234. Sprocket 230 through chain 236 (Figure 7) drives a suitable sprocket mounted on shaft 238 supported in suitable bearing brackets attached to the outer wall of housing 222. Also secured to shaft 238 is a sprocket 240 (Figure 1) which drives one of the endless elevator chains 228. The other elevator chain is driven by shaft 238 by means of a sprocket 242 mounted on a shaft 244 through a horizontal shaft 246 and suitable bevel gearing (not shown). Both elevator chains 228 run over a pair of idler sprockets 248 pivoted to shafts 250 supported in suitable bearing brackets attached to the outer wall of housing 222.

In case some pins remain standing after the first ball is thrown by the player, the table T descends, picks up said standing pins and returns to its dwell position II above the alley (Figure 2) after which a suitable alley sweep S, which functions also as a guard against carelessly or inadvertently rolled balls, pushes the fallen pins into pit P. In order to assure that all pins falling or pushed into pit P reach the lower chamber F of pin magazine M, pit P is provided with a suitable device for moving pins rearwardly in the pit. In the form illustrated, this is a pit sweep PS which pushes all pins from the pit onto the moving floor formed by flights 42 and bars 32 of the pin conveyor CO which runs in a substantially horizontal plane across the bottom of chamber F. Flights 42, while passing through the bottom portion of chamber F, move progressively into substantially horizontal positions and are held in that arrangement by means of their guide shoes 44, which engage a guide rail 252 attached to the bottom portion of housing 25. A pin 253, projecting from the rear wall of housing 25 into the path of flights 42 near the turning point of the conveyor chains 30 (Figure 1), assures a proper guidance of shoes 44 onto guide rails 252.

Pit sweep PS (Figure 2) consists of a transverse sweep board 254 attached to a horizontal gear rack 256 which engages with and is reciprocated by a gear 258 mounted on shaft 259 protruding from a reversible gear reduction motor 260 conveniently mounted beneath the alley bed. In order to impart greater stability to board 254, it may be attached to and reciprocated by two or more gear racks (not shown) which would necessitate two or more gears (not shown) mounted on common shaft 259 driven by said reversible gear reduction motor.

The alley sweep S employed (Figure 2) consists of a sweep board 262 extending across the alley and at its ends secured to arms 264. Arms 264 are pivotally attached to spaced endless chains 266 actuated by spaced oscillating sprockets 268 mounted on shafts 269 of reversible gear reduction motors 270. Each motor is suitably mounted to the respective frame member 156. Each chain 266 runs in a suitable channel in frame member 156. Each arm 264 is provided with a suitable double acting shock absorber rod 272 linking arm 264 with chain 266. This mechanism provides means which soften any sharp impact which sweep board 262 may receive

when fallen pins are swept into the pit. This mechanism also absorbs the shock caused by carelessly or inadvertently thrown balls striking against the front face of sweep board **262**. It is to be understood, of course, that the two motors **270**, activating the sweep S, are fully synchronized and act as one unit.

While the triangularizing pin rack R, illustrated in Figures 1, 2 and 9 and described heretofore may be considered the preferred form of pin rack construction, a modified form of pin rack R' is disclosed in Figures 3, 5, 6 and 8. In this modified form, pin rack R' consists of a frame or shell **280** in which are supported four shelves **282**, **284**, **286** and **288**, each of which carries one or more sets of laterally spaced upright mounted pin guide plates **290**. The side edges of plates **290** are spaced in such a manner as to form pockets or stations arranged in a manner similar to the ten stations in plates **64** of the preferred form illustrated in Figure 1 and corresponding with the pattern in which the pins are set on the alley. As shown in Figure 8, the several sets of station forming plates are also spaced longitudinally in order to engage bowling pins at two points in order to locate and hold them properly in substantially horizontal positions for removal from rack R'.

The arrangement of plates **290** is such that on shelf **288** is located station No. **1** for No. 1 pin, on shelf **286** are located stations Nos. **2** and **3** for Nos. 2 and 3 pins, on shelf **284** are located stations Nos. **4**, **5** and **6** for the Nos. 4, 5 and 6 pins, and on shelf **282** are located stations Nos. **7**, **8**, **9** and **10** for pins Nos. 7, 8, 9 and 10. With the exception of station No. **1**, each station is provided with a gap closing device. In stations Nos. **7**, **8**, **9** and **10**, each device consists of a control arm **292** mounted on a shaft **294** supported in suitable bearings in front and rear guide plates **290**. To each shaft **294** is also secured a pair of control lugs **296**, each of which engages with one of the two gap closing arms **298**, which are pivoted on a shaft **302**, also held by guide plates **290**. Due to the difference in construction, i. e. the difference in depth of the pockets forming stations Nos. **2**, **3**, **4**, **5** and **6**, from that of pockets forming stations Nos. **7**, **8**, **9** and **10**, each of the former pockets is provided with a pair of control arms **304** each of which is mounted on a shaft **306** supported in suitable bushings or bearings in guide plates **290** (Figure 8). To each shaft is secured a pair of control lugs **308** each of which engages with a gap closing arm **310**, pivotally mounted on shaft **312** supported on bearings in front and rear plates **290**. Control arms **304** and gap closing arms **310** are of similar shape and design as arms **292** and **298** respectively, but shorter in length. These arms are shown in greater detail in Figures 5 and 6. While Fig. 5 illustrates a deeper pocket than those employed in stations Nos. **7**, **8**, **9** and **10**, Figure 6 discloses a shallow pocket as used in stations Nos. **2**, **3**, **4**, **5** and **6**.

The modified stations shown in Figures 5 and 6, differ from the pockets illustrated in Figures 3 and 8 only in the contour or shape of the side edges of the vertical guide plates **290** forming said pockets. In Figures 5 and 6, the sides are shown straight, while in Figures 3 and 8 the sides are shown curved. Both types of stations work equally well in receiving and supporting pins.

The pins are elevated by flights **42** to the top edges **314** of vertical guide plates **290** (Figure 3) in the same manner as in the preferred form illustrated in Figure 1, and described heretofore. The first pin delivered to top edges **314** is rolled horizontally over or along the same by the vertically positioned flight until the pin encounters the first pocket forming No. **10** station. The pin drops into this pocket and comes to rest on the shelf **282** in a head forward horizontal position. By dropping into and while occupying said station, this pin depresses control arm **292** which heretofore protruded into station No. **10**. Control arm **292** in turn actuates control lugs **296** which in turn effect an upward movement of gap closing arms **298**, bringing the latter substantially in line with the top edges **314** of plates **290**, thereby forming a bridge closing the pocket and preventing any further pin from dropping into station No. **10**. The second pin arriving at the top edges **314** of plates **290** is rolled horizontally therealong over the bridging gap closing arms **298** of station No. **10** and into the open pocket of station No. **9**, causing a depression of the respective control arm **292** which effects the closing of this pocket by its respective gap closing arms **298** in the same manner as the gap closing mechanism for station No. **10** described above. The third and fourth pins will be delivered into the pockets of stations Nos. **8** and **7** respectively, each of which is closed in the same manner after the arrival of a pin therein. The fifth pin, therefore, is rolled by its flight **42** over the top edges **314** and the closed pockets of stations Nos. **10**, **9**, **8** and **7** until it reaches the edges of the extreme left guide plates **290** on shelf **282** (Figure 3) where it falls into a chute formed by the side edges **320** of said guide plates and the inner wall of shell **280**. The curved top edges **322** of the extreme left side guide plates **290** on shelf **284** guide the fall of the pin and bring the same in contact with a pair of horizontally mounted longitudinally spaced rotating spirals **324** (Figures 3 and 8) which engage said pin at spaced peripheral points on its top portion and roll the same over the top edges of guide plates **290** on shelf **284** until it reaches and drops into the pocket of station No. **4**. The arrival of a pin in the latter, causes control arms **304** to be depressed. This in turn, through control lugs **308**, effects a movement of gap closing arms **310** to pocket closing position. The sixth pin delivered by flight **42** to the top edges **314** will follow the same path as the fifth pin, except that, by means of spirals **324**, it is moved over the now closed pocket of station No. **4** and drops into the pocket of station No. **5** (Figure 8). The seventh pin is moved over the same path as the two previous pins and is dropped into the pocket of station No. **6**. The eighth pin is moved in the same manner over the top edges of plates **290** on shelves **282** and **284** until it reaches the extreme right side edges **326** of plates **290** on shelf **284**, where it drops into a chute formed by side edges **326** and the curved top edges **328** of plates **290** on shelf **286**. The curved top edges **328** guide the top portion of this pin into engagement with a pair of horizontally mounted longitudinally spaced rotating spirals **330** which advance it until it drops into the pocket of station No. **3**. After receiving a pin, the pocket of station No. **3** is closed in the same manner and by mechanisms identical with those used in closing the pockets of stations Nos. **4**, **5** and **6**. After being delivered to the top edges **314**, the ninth pin follows the same paths as the previous pin and is then dropped in the pocket of station No. **2**. The tenth and last pin is moved in the same paths and by the same mechanism as the two previous pins until it reaches a chute formed by the extreme left side edges **332** of plates **290** on shelf **286** and curved top edges **334** of guide plates **291** vertically mounted on shelf **288**. Curved top edges **334** guide the top portion of said pin into engagement with a pair of horizontally mounted longitudinally spaced rotating spirals **336** which advance this pin until it drops into the pocket of station No. **1**, thus completing the filling of the triangularly arranged stations Nos. **1** to **10** with pins.

Spirals **324**, **330** and **336** are driven by means of a suitable gear reduction motor **338** (Figure 3) conveniently mounted on the inner side of shell **280**. The shaft of motor **338** carries a sprocket **340** which, through chain **342**, drives sprocket **344** mounted on a horizontal shaft **346** supported by suitable bearing brackets conveniently attached to housing **25** of the machine. Also secured to shaft **346** are sprockets **348** and **350**. The latter, through chain **352**, drives sprocket **354** mounted on shaft **356** which carries one of the two spirals **330**. Sprocket **348**, through chain **358**, drives sprocket **360** mounted on shaft **362** which carries one of the two spirals **336**. Shaft

362 also carries sprocket 364 which, through chain 366, drives sprocket 368 mounted on shaft 370 which carries one of the spirals 324. The drive for one of each pair of spirals 330, 336 and 324 just described, is that for the spirals located towards the front portion of the pin rack. The drive for each rearwardly located spiral is the same with the exception that it is driven from a shaft (not shown) which is in line with and parallel to shaft 346 and is driven by the latter through a suitable pulley (not shown) and belt 372 from a pulley 374 mounted on shaft 346. In arranging belt 372 to run crosswise, clockwise and counterclockwise rotations of the front and rear spirals respectively are obtained.

An important feature of this invention is the pin changing mechanism which includes a storage bin SB (Figure 1). In the embodiment shown, bin SB is designed to hold twenty pins or two full sets. If desired, however, fewer pins can be stored therein. The pin changing mechanism is so constructed and operated that bowling pins in play can be transferred from the alley and rack R to storage bin SB and exchanged for stored pins in bin SB. The pin changing and storage mechanism is employed for changing and/or replacing one or more sets of pins in use or in play for one or more sets of pins in storage in bin SB. For example, if there are two sets of pins in storage bin SB, and two sets of pins are in play, it is possible to change one set progressively and in this way extend the life of each set of pins. In this manner, because each set of pins is bowled against only one fourth or one half of the time as compared with continuous use, the wear and tear on each set of pins is reduced and hence a saving results to the bowling alley proprietor because of the longer use which he obtains from his bowling pins. The mechanism provided by the invention, therefore, allows the bowling alley proprietor to control the use of his pins in such a way that his best pins are not in constant use.

It is also quite common in bowling alley establishments to use "open play" pins whenever possible instead of new or relatively new "league" pins which are required in league or tournament play. The term "open play" as applied to bowling pins, includes pins which although worn or in use for some time and not acceptable for league play, can still be used and are not objected to by many bowlers. It will be seen, however, that although "open play" pins can be used at certain times, it may be necessary or desirable in order to satisfy customers, to change the pins. The mechanism described hereinafter accomplishes this purpose in a rapid and efficient manner.

The storage bin designated generally SB, consists of a suitably shaped box or shell 380 mounted within housing 25 adjacent the pin reversing and orienting channel U. Within the box 380, are suitably arranged a number of spaced generally horizontally positioned shelves 382 having a slight incline which support bowling pins delivered into box 380, and along which pins can roll by gravity and pressure of succeeding pins to proper storage positions, such as shown in Figure 1. The top portion of box 380, adjacent channel U, is provided with a hinge mounted entrance or guard door 384, which is normally maintained in bin entrance closing position by spring 385. Door 384 is moved to bin entrance opening position by means of a solenoid 388 suitably mounted on the top of said box 380. The armature of solenoid 388 is pivotally connected to one end of link 386. The other end of link 386 is connected to door 384. When door 384 is in bin opening position, bowling pins being pushed through channel U by flights 42 are delivered into bin SB. These pins gravitate downwardly between plates 389, 387, and 393 and roll from shelf to shelf through passageways formed by the ends of shelves 382 until all pins delivered into bin SB take positions as shown in Figure 1. While shelves 382, when provided with a slight incline (Figure 1) perform satisfactorily, their inclination can be varied as desired in order to control movement of pins therealong.

In order to provide for the delivery of stored pins from bin SB, the bottom portion of box 380 is provided with a hinge mounted exit or trap door 390. The latter, through link 392, is connected to the armature of a solenoid 394 suitably attached to the lower side of box 380. Door 390 is provided with a suitable spring 391 employed for the purpose of keeping it closed when not actuated by its solenoid 394. Adjacent the entrance and exit of box 380 are mounted suitable pin counters 396 and 398 respectively, the function of which will be described hereinafter.

Counters 396 and 398 can be similar in design and construction to those disclosed and described in Rundell Patent No. 2,388,707, issued November 13, 1945.

In order to make clear the operation of the pin changing and storing mechanism, the automatic transfer of twenty pins or two sets of pins, say, "open play" pins, from the pin rack R or R' and alley to storage bins SB and the replacement thereof by twenty pins or two sets of, say "League" pins is described as follows: Reference is made to Figures 10 to 17 inclusive, which disclose a step by step operation of the pin storing and changing mechanism.

It is assumed that pins designated A and B represent two complete sets of open play pins, and pins designated C and D represent two complete sets of league pins, and, before starting the machine, pins B are on the alley and pins A are in the pin rack, while pins C and D are stored in storage bin SB. Table T rests in its dwell position (Figure 10). Upon operating a suitable pin transfer switch, which will be described hereinafter, pins B on the alley are swept by alley sweep S into pit P, while table T ascends and removes pins A from pin rack R (Figure 11). Table T then places pin A on the alley while trap door 390 of the storage bin is opened by its solenoid allowing pins D to roll out of said storage bin into lower chamber F onto the moving pin conveyor which elevates pins D upward to the now empty pin rack R (Figure 12). After the tenth pin of set D has passed the pin counter 398, the latter effects a closing of trap door 390 of storage bin SB. Due to their weight and the slight incline of shelves 382 in the storage bin, pins C have followed the outgoing set D, but are prevented from leaving storage bin SB by the timely closing of trap door 390. Table T in the meantime has ascended to its dwell position and the entire set of pins D is conveyed into pin rack R while the set of pins C remains in pin storage SB (Figure 13). The pit sweep PS then swings into action and sweeps pins B from the pit P into lower chamber F onto the moving pin conveyor CO. Meanwhile, due to the action of solenoid 388, the entrance door 384 on top of the storage bin opens, thus allowing pins B, carried upward by flights 42 of pin conveyor CO, to be delivered into storage bin SB on top of set of pins C, which at this time remain in the storage bin. After the pit sweep PS sweeps pins B into the lower chamber F onto the pin conveyor, sweep S sweeps pins A from the alley into pit P, while the table T extracts the pins D from the pin rack R and holds them in readiness for spotting above the alley. After the tenth pin of set of pins B has passed counter 386 at the entrance to storage bin SB, counter 396, through solenoid 388, effects a closing of entrance door 384, after which table T places the set of pins D on the alley and the trap door 390 at the bottom of the storage bin again opens and allows pins C to drop onto the moving pin conveyor CO which elevates them and delivers them to pin rack R (Figure 16). In the meantime, the now empty table T ascends and remains in its dwell position above the alley. As soon as the tenth pin of set of pins C passes counter 398 adjacent trap door 390, the latter, through its solenoid 394, is closed again and prevents any further pin leaving storage bin SB. The complete set of pins C, of course, is elevated to the pin rack R (Figure 16). Pins A, still resting in the pit, are then swept by pit sweep PS into lower chamber F onto the moving pit conveyor. In the meantime, en-

trance door 384 opens again and pins A, elevated by the pin conveyor, are delivered into storage bin SB on top of set B already located therein. After the tenth pin of set of pins A passes counter 396 at entrance door 384, the latter is closed in the manner described above, and the change of two entire sets of pins is completed (Figure 17). Sets of pins B and A which heretofore were on the alley and in rack R respectively, are now in the storage bin, and sets of pins C and D, which heretofore were in the storage bin, are now in rack R and on the alley, respectively.

In order to properly control the action, as well as the timing of the various mechanisms during a normal as well as a pin changing cycle, the machine is provided with a suitable electrical control system, such as shown in Figure 18.

The normal cycle of the machine starts when a ball, rolled by a player, lands on plate 180 in pit P, which causes a temporary closing of pit switch 402. This operation starts gear reduction cam motor 404 (Figure 18). A shaft 406, protruding from motor 404, carries a number of cams, all of which are employed for the purpose of effecting the starting and stopping of the various operating mechanisms, as well as the proper sequence and timed relation of the same.

As mentioned heretofore, each mechanism is driven or actuated by its individual motor. As shown in the drawings, seven individual conventional gear reduction motors are employed. Five motors are of the reversible type; the other two are of the one direction rotating type. In order to properly control the direction of rotation as well as the time of rotation of each motor, the current supply is directed as well as timed by means of a cam designed to open or close properly arranged contacts. Therefore, alley sweep motor 270 is controlled by cam 408, pit sweep motor 260 is controlled by cam 410, table motor 164 is controlled by cam 412, pin gripper motor 148 is controlled by cam 414, ball lift and cushion motor 220 is controlled by cam 416, pin conveyor motor 40 is controlled by cam 418 and ball elevator motor 234 is controlled by cam 420. Cams, 408, 410, 412, 414, 416, 418 and 420 are mounted on shaft 406 of motor 404.

Also attached to shaft 406 is a motor control cam 422 which is used to keep cam control motor 404 running after it is started by the closing of pit switch 402. Cam 422 on shaft 406 starts turning in the direction of the arrow as soon as the temporary closing of pit switch 402 starts motor 404, causing cam follower 424 to ride off the high spot 426 of cam 422, which effects a closing of contacts 428, and a shunting of pit switch 402. One side of switch 402, as well as one side of contacts 428, is connected to one of the power lines L by means of a line 430. The latter is provided with a normally closed switch 432, the action of which will be described hereinafter.

As cam shaft 406 begins to rotate a high spot 433 on ball and cushion lift cam 416 engaged by cam follower 434 on switch arm 435, throws reversing switch 436 to the right, as viewed in Figure 18, and through proper contacts, causes reversible gear reduction motor 220 to turn in a counter-clockwise direction, thereby effecting a raising of the backstop or cushion 192, which allows spring powered ball lift L to rise and deliver the ball to ball elevator E. At this time, the cam follower 434 of switch 436 has dropped from the high portion 433 of cam 416 to a neutral surface 438 of the same, causing switch 436 to resume its neutral position which shuts off the power to motor 220 and causes it to stop, thereby allowing cushion or backstop 192 to remain in its raised position. In the meantime, a high portion 440 on cam 420 has engaged cam follower 442 of switch 444 and closed it. The closing of switch 444 starts motor 234 which drives vertical ball elevator E, thereby elevating the ball through elevator shaft 222 to exit 223 for delivery onto return runway 226. Motor 234 and hence elevator E, stop again as soon as cam follower 442 drops off high spot 440 of cam 420 effecting the opening of switch 444.

Shortly after a bowling ball is thrown and lands in pit P, table control cam 412, through a cam follower 446 dropping into a low spot 448 on cam 412, causes a reversing switch 450 to move to the left, as viewed in Figure 18, from a neutral to a circuit closed position, thereby starting reversible gear reduction motor 164 and effecting a downward movement of the table T from its dwell position II above the alley to its pin gripping position I adjacent the alley (Figure 2). As soon as table T arrives at its pin gripping position I, table control cam 412 throws reversing switch 450 back to its neutral position, thus effecting a stoppage of motor 164, and table T. As soon as table T comes to rest at its pin gripping position, a high spot 452 on pin gripper control cam 414 through cam follower 454, throws a reversing switch 456 from a neutral to circuit closing position. This starts reversible gear reduction motor 148 which actuates the pin gripper mechanism in table T (Figure 2) and causes grippers 124 to grip any pins remaining standing on the alley. Cam 414 is designed in such a manner as to allow sufficient time for pin grippers 124 to grip the standing pins securely. Continued rotation of cam 414 then causes reversing switch 456 to be thrown from its previously described circuit closing position to its neutral position, which stops pin gripper motor 148.

Table control cam 412 is so designed and timed that, as soon as pin gripper motor 148 stops, a high portion 458 of this cam, through follower 446, throws switch 450 from a neutral to a circuit closing position. Since at this time switch 450 is moved by high portion 458 of cam 412 to the right, as viewed in Figure 18, the flow of current to table motor 164 is reversed, thus causing motor 164 to effect an upward movement of table T, carrying the pins held by the pin gripper mechanism described heretofore. Table control cam 412 is so designed that as soon as table T reaches its dwell position II above the alley, cam follower 446 drops off the high spot 458, causing switch 450 to snap into neutral position and thereby stop motor 164.

As soon as table T reaches its dwell position II, a high spot 460 on alley sweep cam 408, through cam follower 462, throws a switch 464 from a neutral position to a right side contact, as viewed in Figure 18. This causes reversible gear reduction motor 270 to start, thereby effecting movement of alley sweep S towards pit P, causing all pins which were knocked down by the ball and which have fallen onto the alley or into the gutter, to be swept into pit P. As soon as alley sweep S reaches the end of the alley, cam follower 462 drops from high spot 460 of cam 408 to low spot 466 thereon, causing switch 464 to move from its right side contacts to its left side contacts. This movement causes a reversing of motor 270 and hence the return movement of sweep S. As soon as the latter reaches its inoperative position above the alley, cam follower 462 rides from low spot 466 onto neutral surface 468, which causes switch 464 to break its contacts and move to its normal neutral position, thereby stopping motor 270.

As soon as the fallen pins have been swept into pit P by alley sweep S, a high spot 470 on pit sweep control cam 410, through cam follower 472, moves a switch 474 to its right side contacts (see Figure 18), causing reversible gear reduction motor 260 to rotate in the proper direction to effect a forward motion of pit sweep PS. In this manner, all pins previously swept into pit P are moved into the lower pin receiving chamber F onto the pin conveyor CO which is set in motion by high spot 476 on pin conveyor control cam 418 which through cam follower 478, closes a switch 480 and starts the pin conveyor motor 40. The back-stop or cushion 192 and the ball lift L, as previously described, are still in their uppermost positions. In order to prevent the pins pushed onto the pin conveyor CO from tumbling off the same and out of chamber F when conveyor CO starts moving, pit

sweep PS, after reaching its forwardmost position at the rear of the pit, stops and dwells adjacent ot the conveyor for a short period of time, after which pit sweep PS returns to its original position. The stoppage of pit sweep motor **260** is caused when cam follower **472** drops from high spot **470** of cam **410** to a neutral portion thereof, which breaks the right side contact of switch **474** and returns the latter to its neutral position. After remaining for a short period of time on the neutral portion of cam **410**, cam follower **472** drops into low spot **482** thereon, causing switch **474** to be moved into engagement with its left side contacts, thus reversing the flow of current to motor **260** and effecting a return motion of pit sweep PS. After the latter reaches its inoperative position adjacent the end of the alley bed, as shown in Figure 2, cam follower **472** rides from low spot **482** onto the neutral surface of cam **410**, causing switch **474** to return to its neutral position and stop motor **260**.

As soon as pit sweep PS starts its return movement, cam follower **434** of switch **436** drops into low portion **437** of ball and curtain lift control cam **416**, the action of which moves switch **436** into engagement with its left side contacts (see Figure 18), causing motor **220** to start and effect the downward movement of back-stop **192** and ball lift L. Upon reaching their lowermost positions, cam follower **434** rides onto the neutral surface of cam **416**, again causing switch **436** to move back to its neutral position. This action stops motor **220**. Pin conveyor CO continues running until cam follower **478** of switch **480** drops from high spot **476** of cam **418** to the neutral surface of the same, thereby opening switch **480** and stopping the conveyor motor **40**. In the meantime, and as soon as alley sweep S has returned to its inoperative position above the alley, cam follower **446** drops into low spot **484** of table control cam **412**, causing switch **450** to engage with its left side contacts, as viewed in Figure 18. This operation causes table T, carrying the previously picked up pins, to descend and replace them on the alley. When table T reaches its lowermost position I, cam follower **446** rides from low spot **484** onto a neutral portion of cam **412**, thereby moving switch **450** back to its neutral position which effects a stoppage of motor **164**. Cam follower **446** rides on a neutral portion of cam **412** for a short period of time, resulting in a dwelling of table T at position I. During this time pin gripper motor **148** is set in motion to operate grippers **124** and release pins held thereby for respotting on the alley. Motor **148** is set in motion when cam follower **454** moves onto low portion **486** of cam **414**, causing switch **456** to engage with its left side contacts, as viewed in Figure 18. After pin grippers **124** are opened fully, cam follower **454** rides onto a neutral portion of cam **414** again causing switch **456** to return to its neutral position, and thereby stop pin gripper motor **148**. As soon as the respotted pins are released, cam follower **446** rides off the neutral portion of cam **412** onto a high spot **488** of the same, causing switch **450** to engage with its right side contacts, as shown in Figure 18, starting motor **164** and effecting an upward movement of table T to its dwell position II above the alley. The upward movement of table T stops as cam follower **446** drops from the high spot **488** of cam **412** to a neutral surface thereon.

After the pins are respotted on the alley and table T has resumed its original dwell position II, a high part **427** on cam shaft motor control cam **422** engages with cam follower **424** on switch arm **429** and effects an opening of contacts **428**, thereby causing gear reduction motor **404** and cam shaft **406** to stop. High portions **426** and **427** on cam **422** are exactly 180° apart, thus stopping the cam control motor **404** and cam shaft **406** every one-half revolution. Therefore one complete revolution of cam shaft **406** represents the first and second cycles of the machine which correspond with the first and second balls thrown by the player.

After the first cycle, described above, is completed and high spot **427** on cam **422** has opened contacts **428**, the machine is ready for the second cycle. At the end of the first cycle, every mechanism is in its normal position, the table dwells in position II above the alley and all pins which remained standing after the first ball was thrown, are standing on the alley.

The second cycle starts as soon as the second ball, thrown by the player, lands in the pit and causes a closing of pit switch **402**. All control cams, with the exception of table control cam **412** and pin gripper control cam **414**, are symmetrical, i. e. the high and low spots thereon for the second cycle are in the same sequence and time relation as during the first cycle. The second half of the table control cam **412** is so designed as to effect an upward movement of table T after the second or last ball of a frame is thrown and not a downward movement to pick up pins as in the first cycle. During its movement upward in the second cycle, the table turn 90° and partly enters the pin magazine M, as shown in Figure 2, while the open pin grippers carried by said table, slide over the projecting neck portions of a set of pins supported horizontally in triangularizing pin rack R. During a short dwell period of table T, pin gripper control cam **414** effects the operation of grippers **124** to grip the pins after which the table moves away from rack R, removing the set of pins gripped by grippers **124**. In its further movement, table T descends, turns again 90° during its downward movement and spots the new set of pins on the alley. Of course, the delivery of a new set of pins to the alley takes place after the latter has been swept clean of all standing and fallen pins by sweep S and the sweep has returned to its normal inoperative position above the alley. In the meantime, all pins of the previous or first set of pins are conveyed to the triangularizing pin rack R and the ball returned to the player in the same manner as during the first cycle of the machine, the first and second cycles representing the customary two balls or one complete frame in ten pin bowling.

In addition to the control cams provided for the normal operation of the bowling pin setter just described, the machine is equipped with an additional set of control cams **502**, **504**, **506**, **508**, **510**, **512**, **514**, **516** and **518** (Figure 18) employed for the purpose of controlling the time and sequence of operation of the various mechanisms when it is desired to replace or change sets of pins, as mentioned hereinabove. For example, it may be desired to change one set (B) presently on the alley, and another set of pins (A) in the pin rack R, for two sets of pins (C) and (D) presently in the storage bin SB, and convey the former two sets (A) and (B) into the storage bin.

The pin change control cams **502**, **504**, **506**, **508**, **510**, **512**, **514**, **516** and **518** are mounted on a shaft **520** operated by a suitable gear reduction motor **522**. In order to change sets of pins as outlined above, the player presses a push button **524** which starts the gear reduction motor **522**. As cam shaft **520** begins to turn, a cam follower **526** on a switch arm **528** drops off a high spot **530** of motor control cam **502**, causing switch arm **528** to close contacts **532**. This shunts push button **524**, and assures a continuous running of motor **522** after the release of the normally open push button **524**. Motor **522** keeps on running until motor control cam **502** makes one full revolution, and cam follower **526** of switch arm **528** again runs on high spot **530** which breaks contacts **532** and stops motor **522**. No ball is rolled down the alley either at the beginning or during the pin changing operation. Pit switch **402** is rendered inoperative at the beginning of the pin changing cycle when an arm **536** mounted on and turning with cam shaft **520** effects an opening of the normally closed switch **432** in line **430**. This arrangement prevents starting of machine cam control motor **404** at any time during the pin change cycle.

When cam shaft **520** begins to turn, high spot **538** on

alley sweep control cam 506 engages cam follower 540 on a switch 542 causing the latter to move from its neutral position into engagement with its right side contacts, as shown in Figure 18. This starts reversible alley sweep motor 270, whereupon alley sweep S sweeps the pins of set (B) from the alley into pit P. As cam follower 540 of switch 542 drops from high spot 538 of cam 506 into low spot 544 thereof, switch 542 is thrown into engagement with its left side contacts, as viewed in Figure 18, which causes motor 270 to reverse its motion, thereby effecting a return movement of sweep S to its normal position. Motor 270 stops as cam follower 540 rides from low spot 544 onto the neutral portion of cam 506 which causes switch 542 to break its contacts and move to its neutral or open circuit position.

As soon as alley sweep S starts on its return stroke, high spot 546 on table control cam 510 contacts cam follower 548 of switch 550, causing the latter to move from its neutral position into engagement with its right side contacts, as viewed in Figure 18, thereby starting table motor 164 and effecting an upward movement of table T. The latter stops and comes to pin receiving position in front of pin rack R when cam follower 548 of switch 550 drops from high spot 546 to a neutral portion of cam 510, causing switch 550 to move to its circuit opening position which stops table motor 164. During this dwell period of table T, pin gripper cam 508, through high spot 552 and cam follower 554, actuates a switch 556 which starts pin gripper motor 148 in motion and effects an engagement of the pin grippers 124 in table T with the necks of pins of set (A) resting in pin rack R. After these pins are firmly gripped, pin gripper motor 148 stops as cam follower 554 drops from high spot 552 onto a neutral portion of pin gripper control cam 508. Table T, due to the action of low spot 558 of cam 510 upon cam follower 548 of switch 550, then moves away from rack R withdrawing the pins of set (A) and descends with them toward the alley. Upon reaching its lowermost position I, these pins are placed on the alley and the table movement is arrested as cam follower 548 of switch 550 rides from low spot 558 to a neutral portion on cam 510, thereby stopping table motor 164. A low spot 560 in pin gripper control cam 508 through cam follwer 554 on switch 556 then sets pin gripper motor 148 in motion again and effects a release of pins (A) from grippers 124 in table T. After these pins are released, cam follower 554 of switch 556 rides from low spot 560 onto a neutral portion of cam 508 and stops pin gripper motor 148. Table T, through high spot 562 on the control cam 510 acting upon cam follower 548 of switch 550, then ascends again and dwells at position II above the alley as cam follower 548 of switch 550 drops from the high spot 562 onto a neutral portion of the cam.

In the meantime, a high spot 564 on exit gate control cam 518 engages cam follower 566 of switch arm 568 which causes a closing of contacts 570 and the energization of solenoid 394 which, in turn, through its armature and link 392 effects an opening of exit gate 390. As soon as exit gate opens, the pins of set (D), stored in the bottom portion of the pin storage bin SB, are discharged therefrom. The pin resting on gate 390 falls clear of storage bin SB when gate 390 opens. The remaining pins of set of pins (D) roll one by one along downwardly inclined shelves 380, 382 and fall one by one into chamber F and upon the substantially horizontally positioned flights 42 of moving pin conveyor CO which carries these pins directly up to the now empty pin rack R. The movement of pins of set (D) out of storage bin SB also results in the movement of pins of set (C) therein into the positions formerly occupied by the pins of set (D), see Figure 12. Pin conveyor CO is set in motion shortly after cam shaft 520 starts turning, and remains in motion to almost the end of the pin changing cycle. Pin conveyor motor 40, during the cycle, is controlled by cam 514 on which runs cam follower 572 on switch arm 574 which opens and closes contacts 576 in order to effect the stopping and starting of the motor.

In order to prevent more than ten pins dropping out of storage bin SB, a pin counter 398 is located in a suitable position adjacent exit gate 390. Counter 398 may be similar in construction to that disclosed in Patent 2,388,707, issued November 13, 1945 to R. E. Rundell. Counter 398 consists chiefly of a ten-tooth ratchet wheel 578 pivotally supported on a stud 580. Also pivotally mounted on stud 580 is a counter arm 582 which extends into the path of pins leaving storage bin SB. Arm 582 is provided with an extension lever 584 carrying a pawl 586 which is held in engagement with ratchet wheel 578 in a well known manner by a suitable tension spring (not shown). Suitably mounted on ratchet wheel 578 is a bridge plate 590 which normally joins a pair of contacts 592 connected to the current supply line of cam control motor 522. Counter 398 is designed in such a manner that ratchet wheel 578 rotates a distance of one tooth each time a pin moving out of storage bin SB temporary depresses counter arm 582. A suitable tension spring 588, attached to lever 584, is provided to return arm 582 to its normal position after depression. A suitable stop pin 589 limits the return movement of arm 582. A second spring mounted pawl 594, engaging with ratchet wheel 578, is employed to prevent backlash of the latter.

As soon as the first pin of set (D), dropping out of the storage bin SB actuates counter arm 582, ratchet wheel 578 advances one tooth. Since bridge plate 590 is mounted on the ratchet wheel, this causes an opening of contacts 592 and stops cam control motor 522. Stopping the latter, of course, effects the stopping of cam shaft 520 and all control cams mounted thereon, but, since the high spot 564 through cam follower 566 on switch arm 568 holds contacts 570 closed when control motor 522 is stopped, contacts 570 remain closed and therefore solenoid 394 remains energized. Consequently, exit gate 390 remains open, and the ten pins of set (D) move and drop from storage bin SB. Since cam follower 572 of switch arm 574 also is on the high portion of pin conveyor control cam 514, contacts 576 also remain closed and pin conveyor CO continues to move and conveys the pins (D) to triangularizing rack R where they are triangularized. All other cam followers at that moment are on neutral portions of their respective cams, and therefore no other mechanisms are in motion during this period. As the tenth pin of the pins of set (D) emerges from storage bin SB and depresses counter arm 582, the bridge plate 590 has, after the ten stepwise movements of ratchet 578, returned to its original circuit closing position, and again connects contacts 592 which immediately causes control motor 522 to start again. The starting of motor 522 effects a turning of exit gate control cam 518, whereupon cam follower 566 drops off high spot 564 and effects a breaking of contacts 570. The breaking of the latter effects a de-energization of solenoid 394, enabling spring 391 to close exit gate 390 and preventing the pins of set (C), in this instance, from being removed from storage bin SB.

At this moment, there are a set of pins (A) standing on the alley, a set of pins (B) still lying in the pit, a set of pins (C) arrested in the storage bin SB and a set of triangularized pins (D) resting in the pin rack R (Figure 13). A high spot 604 on cushion lift control cam 512, through cam follower 606 on a switch 608, causes an engagement of the latter with its right side contacts, as viewed in Figure 18, thus starting motor 220 and effecting an upward movement of cushion 192 in order that pins of set (B) can be swept from pit P into chamber F onto conveyor CO. The upward movement of backstop 192 is checked as soon as cam follower 606 drops from high spot 604 onto a neutral portion of cam 512, again causing switch 608 to return to its neutral position.

As soon as backstop 192 has been raised in the manner described, a high spot 596 on pit sweep control cam 504,

through cam follower 598, engages switch 600 with its right side contacts, as illustrated in Figure 18, thereby starting pit sweep motor 260 and causing pit sweep PS to sweep pins (B) from pit P beneath backstop 192 into chamber F onto moving pin conveyor CO. As cam follower 598 of switch 600 drops from high spot 596 to low spot 602 of cam 504, motor 260 reverses and a return stroke of pit sweep PS is effected. Pit sweep motor 260 is stopped again as soon as cam follower 598 on switch 600 rides from the low spot 602 onto a neutral portion of cam 504.

Cushion 192 remains in its lifted position until pins (B) are swept into chamber F, after which a low spot 610 on cam 512 is engaged by cam follower 606, switch 608 is moved into engagement with its left contacts, as viewed in Figure 18, to start motor 220 and a downward movement of backstop 192 is effected. This downward movement stops as cam follower 606 rides from low spot 610 onto the neutral portion of cam 512 again, thereby breaking the motor circuit.

Since pin conveyor CO moves continuously, pins of set (B), as soon as they are swept by sweep PS into chamber F, are carried upwardly for delivery to rack R. In the meantime, high spot 612 on the cam 516 is engaged by cam follower 614 on a switch arm 616, causing the latter to close contacts 618 and effecting an energization of solenoid 388. The energization of solenoid 388 through its armature and link 386, causes the opening of storage bin infeed gate 384 so that all pins of set (B), while being conveyed through the U-shaped channel U by pin conveyor CO, are moved one by one through open gate 384 into pin storage bin SB. These pins, which are horizontally positioned, roll and/or slide along inclined shelves 387, 393 and 382 and come to rest in the upper part of storage bin SB, the pins of set (C) occupying the bottom portion of the storage bin. Since it is desirable that a full set of ten pins be delivered to storage bin SB, a pin counter 396 is provided. This counter preferably is mounted on the top portion of said bin SB and adjacent admission gate 384.

Pin counter 396 can be of the same type and construction as counter 398 previously described. Counter 396 consists of a ten tooth ratchet wheel 620 loosely mounted on a stud 622 on which is also pivoted a counter arm 624 which extends into the path of pins moving into storage bin SB. Arm 624 is provided with an extension lever 626 carrying a spring mounted pawl 628 engaging with the teeth of ratchet wheel 620. Suitably attached to ratchet wheel 620 is a bridge plate 630 which normally connects and closes a pair of contacts 632 provided in the current supply line from cam control motor 522. Therefore, as soon as the first pin passing counter 396 and entering the storage bin depresses counter arm 624, bridge plate 630 advances with the ratchet wheel 620 and causes a break of contacts 632 which, of course, interrupts the flow of current to cam control motor 522 and consequently stops it. Since cam shaft 520 and all cams thereon are also stopped, switch arm 616 at this time keeps contacts 618 closed. Solenoid 388 remains energized and holds admission gate 384 open until the tenth pin has passed and the repeated actuation of counter arm 624 has brought bridge plate 630 again into position to engage both contacts 632. When this takes place, motor 522 is restarted to rotate cam shaft 520 which causes cam follower 614 on switch arm 616 to drop off high spot 612 of cam 516, resulting in a deenergization of solenoid 388 and a closing of gate 384 with assistance of tension spring 385. Counter 396 is also provided with a suitable tension spring 634 attached to lever 626 for the purpose of biasing lever 626 against a suitable stop 635 after each action upon counter arm 624. A second spring mounted pawl 636 engaging with ratchet 620, prevents backlash during the counting operations.

Shortly after the pins of set (B) have been delivered to storage bin SB, and motor 522 and cam shaft 520 have resumed their rotation, a high and low spot 638 and 640 respectively on alley sweep control cam 506, effect the customary back and forth stroke of alley sweep S, causing the latter to sweep the pins of set (A) from the alley into pit P. At the same time, due to the action of a high spot 642 on cam 510 upon cam follower 548 and switch 550, table T is caused to move upward to pin receiving position in front of triangularizing pin rack R which at this moment supports the pins of set (D). During this dwell period of table T, adjacent rack R, the pin gripper mechanism is actuated through the engagement of high spot 644 of cam 508 with cam follower 554 of switch 556 which causes pin grippers 124 in table T to securely grip the necks of the pins of set (D) projecting outwardly from pin rack R. As soon as cam follower 554 of switch 556 drops from high spot 644 onto a neutral portion of cam 508, the pin gripper mechanism is arrested, after which cam follower 548 of switch 550 drops into low spot 646 of table control cam 510. This results in the downward movement of table T which is arrested when the latter reaches its position II above the alley and cam follower 548 of switch 550 rides from low spot 646 onto a neutral portion of table control cam 510, the table carrying and holding the entire set of pins (D) above the alley. When table T comes to rest, high spot 648 of discharge or exit gate control cam 518 engages with the cam follower 566 of switch arm 568. This causes a closing of contacts 570 resulting in the energization of solenoid 394, which in turn opens the exit gate 390 at the bottom portion of pin storage bin SB.

The opening of gate 390 allows the pins of set (C) in the lower portion of storage bin SB to be delivered one by one from said storage bin onto the moving pin conveyor CO which carries them upwardly to pin rack R for delivery into the triangularly arranged pockets therein. The movement of pins of set (C), out of storage bin SB, actuates pin counter 398 in the same manner as described heretofore in the previous operation, i. e. the first pin contacting counter arm 582 effects the stopping of cam control motor 522 and cam shaft 520, while the tenth pin causes motor 522 to start again, shortly after which, cam follower 566 of switch arm 568 drops off high spot 648 which causes the opening of contacts 570 and a deenergization of solenoid 394 resulting in a closing of gate 390.

Shortly after exit gate 390 is closed, cam follower 548 of switch 550 drops into a low spot 650 of table control cam 510 effecting a downward movement of table T and a placing of pin set (D) on the alley. Upon reaching its lowermost position I, table T is arrested when cam follower 548 of switch 550 rides from low spot 650 onto a neutral portion of cam 510, causing a dwelling of table T in position I. During this dwell period, cam follower 554 of switch 556 drops into low spot 652 of pin gripper control cam 508, causing the actuation of pin grippers 124 in table T to open the grippers and release the pins of set (D), after which the pin grippers remain open as cam follower 554 of switch 556 rides from the low spot 652 onto the neutral portion of cam 508.

As soon as the pins of set (D) are released in spotted standing positions on the alley, cam follower 548 of switch 550 engages with high spot 654 on table control cam 510, causing table T to move upward to its dwell position II above the alley where it is arrested as cam follower 548 of switch 550 drops from high spot 654 onto a neutral portion of cam 510. Also during this period, the backstop 192 is raised again as cam follower 606 of switch 608 engages with high spot 656 on backstop lift control cam 610 thereby starting cushion lift motor 220. The latter is stopped again as backstop 192 reaches its uppermost position and follower 606 of switch 608 drops from high spot 656 onto a neutral portion of cam 512. As soon as backstop 192 is raised, pit sweep PS receives a forward and backward motion due to the

operation of reversible sweep motor **260** through high and low spots **658** and **660**, respectively.

The operation of pit sweep PS causes the pins of set (A) to be swept from pit P into chamber F and onto the moving pin conveyor CO. As soon as the motion of pit sweep PS stops, a high spot **662** on gate control cam **516** engages with cam follower **614** of switch arm **616** which causes a closing of contacts **618** and an energization of solenoid **388**, resulting in the opening of admission gate **384** in storage bin SB. The pins of set (A), which are being conveyed upwardly by pin conveyor CO through U-shaped channel U are delivered by flights 42 one by one through open gate **384** into pin storage bin SB, and on top of the pins of set (B). Counter **396** is actuated in the same manner as described heretofore, the first pin stopping control motor **522**, while the tenth pin causes the restarting of it and all other mechanisms indirectly controlled by said motor. Shortly after restarting motor **522**, cam follower **614** of switch arm **616** drops from high spot **662** onto a neutral portion of cam **516**, causing a breaking of contacts **618** and a de-energization of solenoid **388**, which in turn, with the assistance of spring **385**, results in a closing of admission gate **384**. As the pin changing cycle is now completed, the high spot **530** of motor control cam **502** contacts cam follower **526** of switch arm **528** resulting in the breaking of contacts **532** and a stopping of cam control motor **522**. Before high spot **530** reaches cam follower **526**, however, arm **536** also recontacted switch **432** and closed the same. The machine is now ready again, either for normal or pin changing operation, as desired.

If it be desired to stop the pin changing mechanism after a single set of pins has been changed, as for example set of pins (C) for set of pins (A), in order to subject sets of pins to progressive use, a control, such as shown in Figure 19, can be used. In Figure 19, cam **503** takes the place of cam **502** of Figure 18. A two arm switch closer **535** is used instead of single arm switch closer **536**. When push button **525** is closed, motor **522** is started and shaft **520** begins to turn. All of the cams shown in Figure 18 operate as formerly, except that shaft **520** is stopped after 180° rotation, when either high portion **531** disengages from switch arm **528**, or after one set of pins in storage bin SB has taken the place of one set of pins in the machine and in use.

The invention above described may be varied in construction within the scope of the claims because the particular embodiment, selected to illustrate the invention, is but one of several possible concrete forms of the same. The invention is not, therefore, to be restricted to the precise details of the structure shown and described.

What I claim is:

1. In a bowling pin spotting machine for use with a bowling alley having a pit at one end thereof, a pin triangularizing magazine, means mounting said magazine in a fixed plane above said pit, pin supports in said magazine, a pin storage device, means mounting said storage device adjacent said magazine, a conveyor having a plurality of pin lifting and transporting flights operative to deliver pins from said pit selectively to said magazine or to said storage device, means for directing pins one by one from said flights into said magazine for delivery to said supports, means for driving said conveyor to cause said conveyor to deliver pins into said pin magazine, means coacting with said conveyor flights for guiding pins advanced by said flights into said pin storage device, and selectively operable means for rendering said guiding means inoperative, whereby pins are delivered by said flights into said pin magazine.

2. In a bowling pin spotting machine for use in a bowling alley, a conveyor having a plurality of individual bowling pin conveying flights, a pin magazine, means mounting said magazine in a fixed plane substantially perpendicular to the plane of said alley, said conveyor flights being normally operative to deliver pins to said magazine, a bowling pin spotter, means for positioning said spotter in a plane substantially parallel with the plane of said magazine, means for operating said spotter to transfer said pins from said magazine to said alley, a pin storage device mounted in said machine and located beneath said magazine, a gate for said storage device located adjacent the path of travel of said conveyor flights, means normally closing said gate whereby pins are normally conveyed by said conveyor flights into said magazine, and selectively operated mechanism for opening said gate to interrupt the movement of pins by said flights to said pin magazine and provide a pin receiving opening in said storage device for movement of pins by said flights through said opening into said storage device.

3. In a bowling pin spotting machine for use with a bowling alley, a conveyor having a plurality of individual bowling pin conveying flights, a pin magazine fixedly supported in elevated position for receiving pins, a bowling pin spotter, mechanism for operating said spotter to transfer pins from said pin magazine to said alley, a pin storage magazine, means mounting said storage magazine in said machine in a position spaced from said pin magazine, a plurality of vertically spaced pin receiving shelves mounted in said pin storage magazine, a guide member extending adjacent the path of travel of said conveyor to normally guide pins advanced by said conveyor past said storage magazine for movement to said pin magazine, a storage gate in said guide member, means normally maintaining said gate closed for effecting delivery of pins to said pin magazine, and selectively operated mechanism for opening said gate to interrupt the movement of said pins by said flights to said pin magazine, and direct pins moved by said flights through said open gate, and guides in said storage magazine and between said vertically spaced shelves for directing said pins onto said shelves of said storage magazine.

4. A machine as defined in claim 3 wherein said storage magazine is provided with a normally closed discharge gate, and wherein said shelves are inclined for gravity delivery of pins therefrom, and part of said conveyor is located beneath said magazine, and mechanism for opening said last-named gate whereby pins on said shelves of said magazine may roll along said shelves by gravity and be directed by said guides to said open gate and drop through said open discharge gate onto said part of said conveyor for delivery to said pin magazine.

5. In a bowling pin spotting machine, a bowling pin storage comprising a plurality of substantially parallel vertically spaced pin supporting surfaces having openings through which substantially horizontal bowling pins can move from one surface to another, a pin magazine spaced from said pin storage, a conveyor for delivering a succession of pins to said pin magazine or to said spaced supporting surfaces of said pin storage, an infeed gate for said pin storage mounted along the path of travel of said conveyor toward said pin magazine adapted to provide access of pins advanced by said conveyor into said storage, means for causing said conveyor to deliver pins to said infeed gate for movement therethrough when said infeed gate is open, a discharge gate remote from said infeed gate located adjacent said conveyor providing for discharge of pins from said storage onto said conveyor, meas normally positioning said gates to prevent entry of pins into said storage or delivery therefrom, whereby pins are moved by said conveyor to said pin magazine, and selectively operated mechanisms for opening said gates to prevent movement of pins by said conveyor to said pin magazine and effect the transfer out of use of bowling pins through said open infeed gate to said surfaces of said storage and the transfer of reserve pins in said storage through said open discharge gate for use in said machine.

6. In a bowling pin spotting machine, a pin storage magazine, a plurality of substantially horizontal shelves in said storage magazine, each having a pin passage opening adjacent one end, said shelves and openings being constructed and arranged to support a plurality of bowling pins in substantially horizontal arrangement in said stor-

age magazine, a pin magazine, a pin conveyor normally operative to travel in a path past said pin magazine to deliver pins thereto, means normally preventing pins moved by said conveyor along said path past said storage magazine to said pin magazine from being delivered to said storage magazine, selectively operable means for incapacitating said last-named means, means rendered operative in response to the operation of said selectively operable means coacting with said conveyor for transporting in-play pins one by one from said conveyor into said storage magazine for movement along said shelves and through said passage openings, and means for effecting the removal from said storage magazine of reserve bowling pins supported by said shelves onto said conveyor for delivery thereby to said pin magazine of said machine.

7. In a bowling pin spotting machine, a fixed pin storage magazine, a fixed pin triangularizing magazine, a conveyor substantially encircling said storage magazine and said pin magazine for delivering pins selectively to said magazines, a pin spotter, means for operating said spotter to transfer pins from said pin magazine to said alley, mechanism normally effecting the delivery of a plurality of pins by said conveyor to said pin magazine, selectively operated means for incapacitating said mechanism and causing said conveyor to deliver in-play pins out of play to said storage magazine, and other selectively operable means for delivering out of play pins from said storage magazine onto said conveyor for delivery thereby to said pin magazine.

8. Bowling pin storage and changing mechanism for a bowling pin spotting machine comprising a pin storage magazine for holding out-of-play pins, a pin magazine for holding in-play bowling pins, said storage magazine having an infeed delivery opening and a discharge opening, means normally blocking said infeed delivery opening and said discharge opening against delivery of in-play pins through said infeed delivery opening into said storage magazine and delivery of reserve pins out of said storage magazine through said discharge opening, conveying mechanism common to said pin magazine and to said pin storage magazine, normally operative to deliver in-play pins to said pin magazine, selectively operated means for unblocking said openings, means rendered operative

in response to the unblocking of said infeed opening for effecting the delivery from said conveying mechanism of in-play pins out-of-play through said unblocked infeed delivery opening, and delivery means in said pin storage magazine for delivering out-of-play pins in said pin storage magazine through said unblocked discharge opening.

9. Bowling pin storage and changing mechanism for a bowling pin spotting machine comprising a magazine having an infeed delivery opening and a discharge opening, a gate for each of said openings normally closing said openings, a pin conveyor having a plurality of pin conveying flights, said conveyor being provided with a substantially horizontal lap adapted to move transversely of the pit of a bowling alley beneath said magazine, a lap extending vertically upwardly relative to said magazine, a lap extending substantially horizontally across said magazine, and a lap portion extending vertically downwardly relative to said magazine into said pit, means for opening said gate of said infeed delivery opening, means for operating said conveyor to move said flights to receive pins in said pit and deliver a plurality of pins constituting one or more sets of bowling pins to a point adjacent the infeed gate, means for delivering said pins from the conveyor through said open infeed delivery opening gate into said magazine, and means for actuating said gate of said discharge opening to open said discharge opening to effect the discharge of one or more sets of pins from said magazine onto said flights of said lap extending transversely of said pit beneath said magazine.

References Cited in the file of this patent

UNITED STATES PATENTS

809,245	Brinkmeyer	Jan. 2, 1906
1,181,649	Downey	May 2, 1916
1,231,863	Downey	July 3, 1917
1,468,212	Redfield	Sept. 18, 1923
1,557,177	Lorenz et al.	Oct. 13, 1925
1,784,084	Williams	Dec. 9, 1930
2,019,607	Hedenskoog	Nov. 5, 1935
2,279,093	Peters	Apr. 7, 1942
2,341,476	Parra et al.	Feb. 8, 1944