Aug. 17, 1926. 1,596,215

C. PALMER

METHOD OF MAKING FLEXIBLE METAL TUBES

Filed May 3, 1923

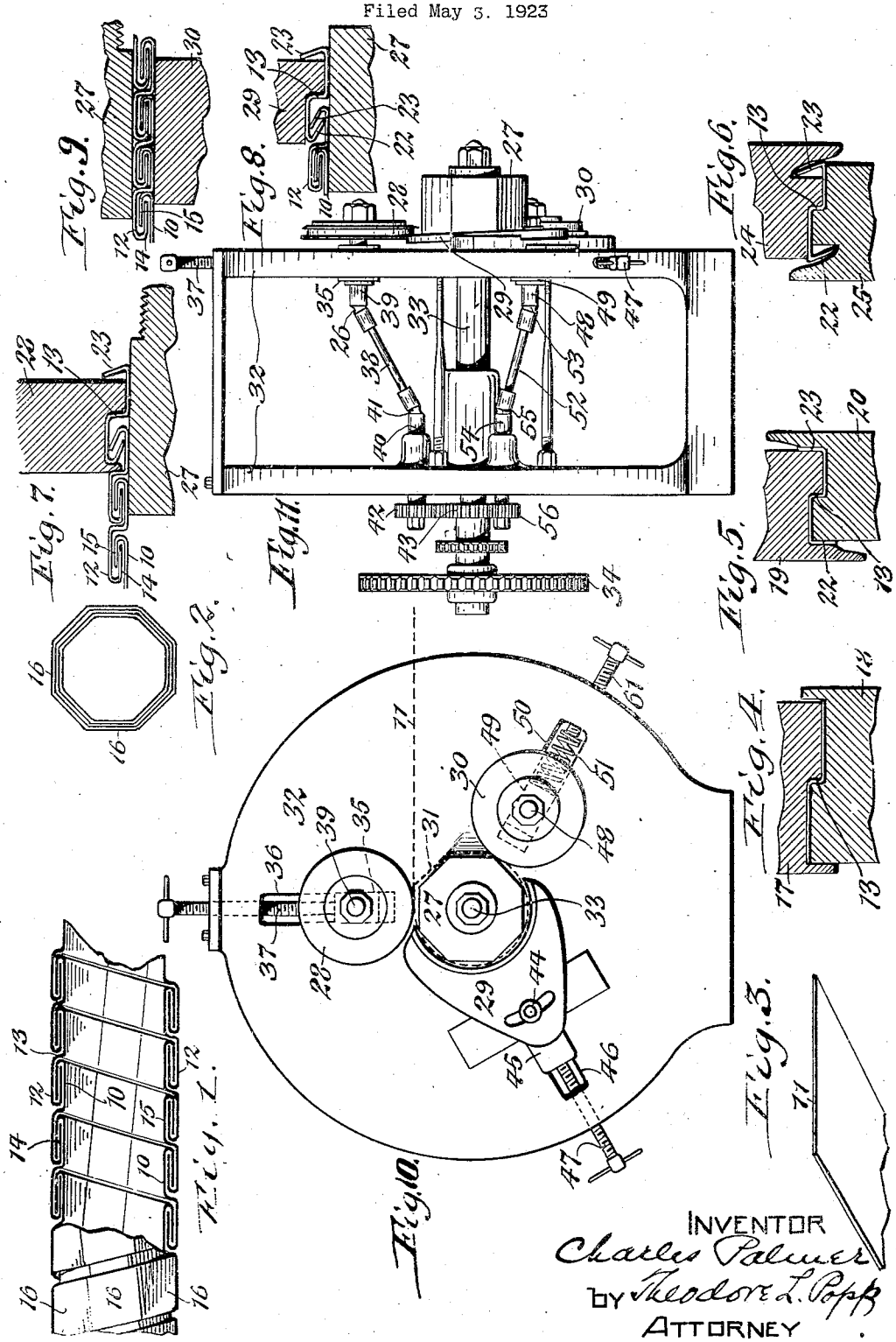

INVENTOR
Charles Palmer
BY Theodore L. Popp
ATTORNEY

Patented Aug. 17, 1926. 1,596,215

UNITED STATES PATENT OFFICE.

CHARLES PALMER, OF BUFFALO, NEW YORK, ASSIGNOR TO FEDERAL METAL HOSE CORPORATION, OF BUFFALO, NEW YORK, A CORPORATION OF NEW YORK.

METHOD OF MAKING FLEXIBLE METAL TUBES.

Application filed May 3, 1923. Serial No. 636,440.

This invention relates to a method of making a flexible metal tube or hose.

Tubes of this character, as heretofore constructed, consisted of a spiral metal strip each turn of which was provided at its opposite longitudinal edges with hook-shaped flanges which interlocked with corresponding hook-shaped flanges on the adjacent turns of the strip forming the tube. This construction has been found unsatisfactory inasmuch as under severe service the tube was turned or twisted backward, thereby decreasing the diameter of the tube and permitting the hook-shaped flanges of the turns to become unlocked, or slip out of engagement from each other and thus destroy the utility of the tube.

It is the object of this invention to so construct the metal tube that its flexibility is preserved while at the same time preventing each convolution or turn of the spiral strip from being twisted circumferentially backward or in the direction in which the hook-shaped flanges of the same can become unlocked and thus prevent the turns of the tube strip from pulling apart. Generally speaking, this object is accomplished by deflecting adjacent overlying portions of the several turns of the strip so that the form of the strip departs from a true circle or cylinder, thereby causing each turn of the strip to become anchored on adjacent turns and thereby preventing circumferential twisting or unwinding of the strip and avoiding the objectionable results above referred to.

In the accompanying drawings:—

Figure 1 is a longitudinal section of a flexible metal tube embodying my invention. Figure 2 is a cross section thereof. Figure 3 is a perspective view of a part of the blank strip from which the flexible metal tube is constructed. Figure 4 is a fragmentary cross section of the co-operating portions of the two off-setting profiling rolls whereby a longitudinal bend is formed in the strip for off-setting the longitudinal edges relatively to each other. Figure 5 is a similar view of the flanging profiling rolls whereby the longitudinal edges of the strip are bent to form flanges thereon. Figure 6 is a similar view of the up-setting profiling rolls whereby the flanges of the strip are upset moderately. Figure 7 is a similar view of the mandrel and the partial closing or setting down roll whereby the upset flanges of adjacent turns of the spiral strip after being engaged are partly pressed together so that they are interlocked. Figure 8 is a similar view showing the partially closed or set down strip between the mandrel and the guiding die. Figure 9 is a similar view of the mandrel and the deflecting or final setting down roll. Figure 10 is a front elevation of that part of the machine containing the mechanism for interlocking the hook flanges of the strip, closing the flanges so that they are interlocked and deflected at intervals to form facets thereon which prevent unwinding of the spiral strip. Figure 11 is a side elevation of this part of the machine.

Similar characters of reference indicate corresponding parts throughout the several views.

In its general organization, the flexible metal tube or hose which contains my improvements is constructed of a strip 11 of pliable sheet metal which is wound spirally so that the front edge 12 of each convolution or turn overlaps the rear edge 10 of the preceding convolution. The several convolutions of the strip which thus form a tube are interlocked with each other so that the tube is flexible, yet will not pull apart under normal conditions, by offsetting the front and rear edge portions of the strip so as to form a longitudinal web 13 between them and providing the front edge portion of each convolution with an inwardly projecting hook-shaped flange 14 which interlocks with an outwardly projecting hook-shaped flange 15 on the rear edge portion of the next preceding convolution of the strip, as shown in Fig. 1. Such a tube is capable of being bent freely when used normally for conducting various materials of a granular or fluid nature.

If however the tube is twisted or turned backwardly circumferentially to a considerable extent, the co-operating hook flanges of some parts of the tube are liable to become detached or slip out of engagement with each other with the result that the utility of the tube is destroyed and cannot be repaired. This is particularly liable to occur when using a tube of this character for delivering spraying materials in an orchard from a tank to a distributing nozzle at which time the attendant by repeatedly dropping the nozzle and picking it up again is liable to turn the tube or hose backwardly one step

at a time until the convolutions of the strip have become unwound to such an extent as to unlock some of the convolutions from each other and thus render the tube useless for conveying purposes.

To overcome this objectionable result in accordance with this invention, adjacent convolutions of the strip are constructed so that they are not only interlocked to resist separation by a lengthwise pull but are also interlocked to prevent circumferential rotation of one convolution relatively to another. This circumferential interlock is preferably accomplished by deflecting adjacent parts of overlying convolutions so that in effect the deflected parts anchor one convolution on another. This is effected in the most practical way by providing each convolution of the strip with an annular row of flat facets 16 which is engaged by corresponding flat facets of the adjacent convolution of the strip. The facets of each tube preferably register with the facets of adjacent turns and the several facets lengthwise in line with each other form a plurality of spiral bands or longitudinally extended facets which facilitates the manufacture of the same. Although eight facets are shown circumferentially on each convolution of the strip by way of example, the number of facets thus formed on the turns may be varied depending upon the size of the tubing, the particular use which is to be made of it, or other conditions.

A flexible metal tube thus provided with facets which are anchored against circumferential displacement relatively to each other positively prevents the tube strip from unwinding and unlocking one turn from another, thus ensuring maintaining the tube in good working condition at all times.

The preferred means and method of procedure for manufacturing this improved metal flexible tube in accordance with my invention are as follows:

A strip 11 of pliable sheet metal of a suitable width, as for example that shown in Fig. 3, is first passed between a pair of off-setting profiling rolls 17, 18 as the co-operating peripheral surfaces of which are adapted upon engaging opposite sides of the strip blank to off-set the two edge portions of the strip relatively to each other and form the longitudinal web 13 which connects the inner opposing parts of these off-sets, as shown in Fig. 4. The strip is next passed between two flanging profiling rollers 19, 20 which are constructed and operate to form flanges 22, 23 which project in opposite directions on the outer longitudinal edges of the strip and are arranged at right angles thereto, as shown in Fig. 5. The strip is next operated upon by the opposing surfaces of a pair of up-setting profile rollers 24, 25, which are constructed to bend the two flanges slightly inwardly so as to form oblique angles with the body of the strip, as shown in Fig. 6. The strip is now passed to a rotary mandrel 27 in such manner that the strip winds spirally around this mandrel and causes the inwardly turned upset flange 22 at the front or advancing longitudinal edge of the strip to engage with the outwardly projecting up-set flange 23 at the rear or trailing longitudinal edge of the last turn or convolution of the strip and the co-operating flanges of adjacent overlying parts of the strip which have just been assembled to be partially set-down or pressed closer together between the periphery of the mandrel and an initial setting-down roll 28 arranged above the mandrel, whereby the hook formation of the flanges on the strip is increased and these flanges are partially interlocked, as shown in Figs. 9 and 10 and prevented from becoming disengaged.

After the partially interlocked hook-shaped flanges on adjacent convolutions of the strip have been acted on by the mandrel and inital setting down roll, this strip with its flanges still in the same condition descends on one side of the mandrel and the flanges are retained in this position by a guiding die 29, as shown in Figs. 8 and 10. Up to the place where the partially interlocked hook-flanges of adjacent convolutions of the strip emerge from between the mandrel and the guiding die, the convolutions of the strip, which now form part of the tube, are of circular form. But as the tubular strip continues its rotary motion with the mandrel it is acted upon by a final setting down and deflecting roll 30 which is mounted so that it is movable toward and from the periphery of the mandrel and is yieldingly pressed toward the latter. The result of this action is that the final setting down roll completes the closing or pressing together of the hook-shaped flanges of adjacent convolutions of the tube strip and finishes the bending of these flanges so that they are arranged parallel with, or substantially parallel with the axis of the tube, as shown in Fig. 9, whereby these flanges are fully interlocked and incapable of being separated or unhooked under normal conditions. In addition to completing the setting down of the interlocking flanges of the strip, the final setting down roll follows the polygonal contour of the periphery of the mandrel which in the present case of octagonal form, thereby causing successive portions of the tube strip after being interlocked with a preceding portion to be bent or deflected inwardly at intervals to conform to the shape of the mandrel, as shown by dotted line 31 in Fig. 10, whereby a finished tube is produced which is polygonal in cross section. In the present case, each of the convolutions of the tube when finished is provided with eight

facets but if desired a greater or lesser number may be produced by changing the peripheral surface of the mandrel accordingly. Each of the facets of each turn of the strip registers with the corresponding facets in adjacent turns and as the tube is turning constantly with the mandrel while the same is being formed from the strip, it results in the corresponding facets of the several turns or convolutions of each strip forming a band or extending facet which passes spirally around the finished tube, the length of this spiral depending on the number of facets in a circumferential row. The flexible metal tube thus provided with portions of its convolutions deflected from a circular or cylindrical form causes these convolutions or turns to be anchored on each other so that they are held against circumferential motion one relative to the other and thereby prevent the unwinding of the tube and pulling apart of the same as heretofore described.

In a machine organized for producing the several operations above described, the rolls shown in Figs. 4, 5 and 6 may be mounted on a frame of any suitable construction. It is preferred, however, to mount the mandrel, initial setting roll, guiding die and final setting roll in the manner shown in Figs. 10 and 11, which is as follows:—

32 represents a main frame provided centrally with a main horizontal driving shaft 33 one end of which carries the mandrel 27 and the other a driving gear wheel 34. The initial setting down roll is mounted on a bearing block or slide 35 which is movable vertically in a guideway 36 in the frame and may be adjusted toward and from the mandrel by a screw 37 which is mounted on the frame and engages with the slide 35. A rotary motion is imparted to the initial setting down roll from the driving shaft by means of an intermediate shaft 38 connected at its front end by a universal joint 26 with the rear end of the shaft or spindle 39 which carries the initial setting down roll, and a rear shaft 40 journaled in the main frame and connected at its front end with the rear end of the intermediate shaft 38 by a universal coupling 41 and provided at its rear end with a gear pinion 42 which meshes with a gear wheel 43 on the main shaft. The guiding die 29 has its face constructed of crescent form to correspond generally with the periphery of the mandrel and the same is mounted so as to be capable of adjustment relatively to the periphery of the mandrel by means of a bolt 44 connecting the guiding die with a carrying block or slide 45, a guideway 46 which is formed on the frame and in which the die block can move toward and from the mandrel, and an adjusting screw 47 mounted on the frame and operatively engaging the die block 45. The final setting down roll 30 is mounted on a front shaft or spindle 48 which is journaled in a bearing block or carrier 49 which is guided in a guideway 50 on the main frame so as to be capable of movement toward and from the periphery of the mandrel, a spring 51 interposed between the outer side of the bearing block 49 and serving constantly to press the final setting down roll toward the periphery of the mandrel, an adjusting screw 61 mounted on the main frame and engaging with the outer end of said spring for varying the tension of the same, an intermediate shaft 52 is connected at its front end by a universal joint 53 with the front shaft or spindle 48 which carries the final setting down roll, a rear shaft 54 journaled in a suitable bearing on the main frame and connected at its front end by a universal joint 55 with the intermediate shaft, and a gear pinion 56 arranged on the rear end of the rear shaft 54 and meshing with the gear wheel 43 on the main driving shaft.

Obviously, other forms of anchorage between the several turns of the strip and other means than those shown in the drawings may be employed for producing the flexible metal tube of my invention and it is therefore to be understood that this invention is not limited to the specific construction of tube nor the particular means here shown for its production.

I claim as my invention:—

The hereindescribed method of producing a flexible metal tube which consists in forming hook-shaped flanges on opposite edges of a strip of metal, winding said strip spirally so as to form a tube in which adjacent convolutions interlock with each other, and providing the interlocking convolutions with co-operating flattened facets which prevent circumferential movement of one convolution on another, the formation of said hooks, the interlocking of the hooks of adjacent convolutions and the flattening of said convolutions for producing said facets being effected simultaneously on different parts of this tube.

CHARLES PALMER.