July 26, 1938. J. A. JOHNSON 2,124,618

APPARATUS FOR SORTING AND FEEDING RECEPTACLE CLOSURE CAPS

Filed Dec. 9, 1936 3 Sheets-Sheet 1

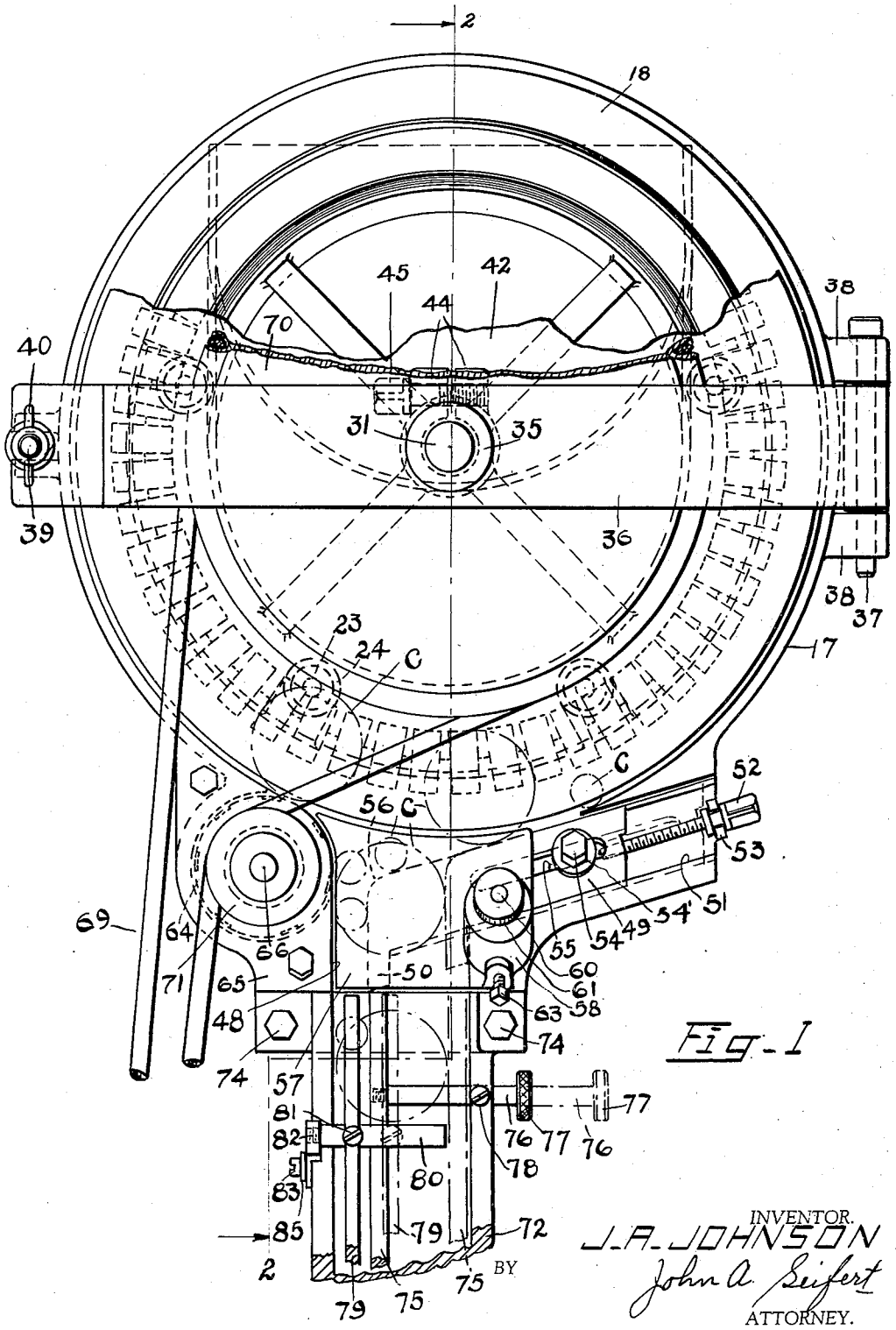

Fig. 1

INVENTOR.
J. A. JOHNSON
John A. Seifert
ATTORNEY.

July 26, 1938. J. A. JOHNSON 2,124,618

APPARATUS FOR SORTING AND FEEDING RECEPTACLE CLOSURE CAPS

Filed Dec. 9, 1936 3 Sheets-Sheet 2

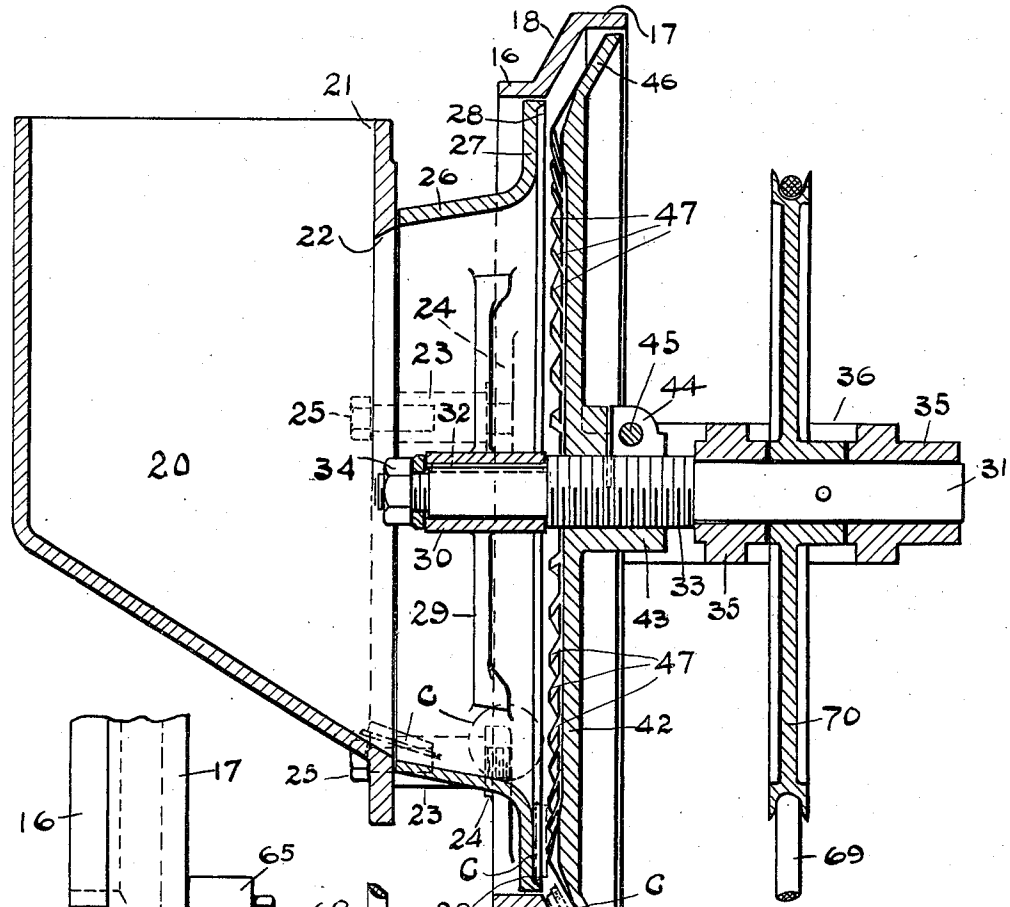

FIG-2

FIG-3

FIG-4

INVENTOR.
J. A. JOHNSON
BY
John A. Seifert
ATTORNEY.

July 26, 1938. J. A. JOHNSON 2,124,618

APPARATUS FOR SORTING AND FEEDING RECEPTACLE CLOSURE CAPS

Filed Dec. 9, 1936 3 Sheets-Sheet 3

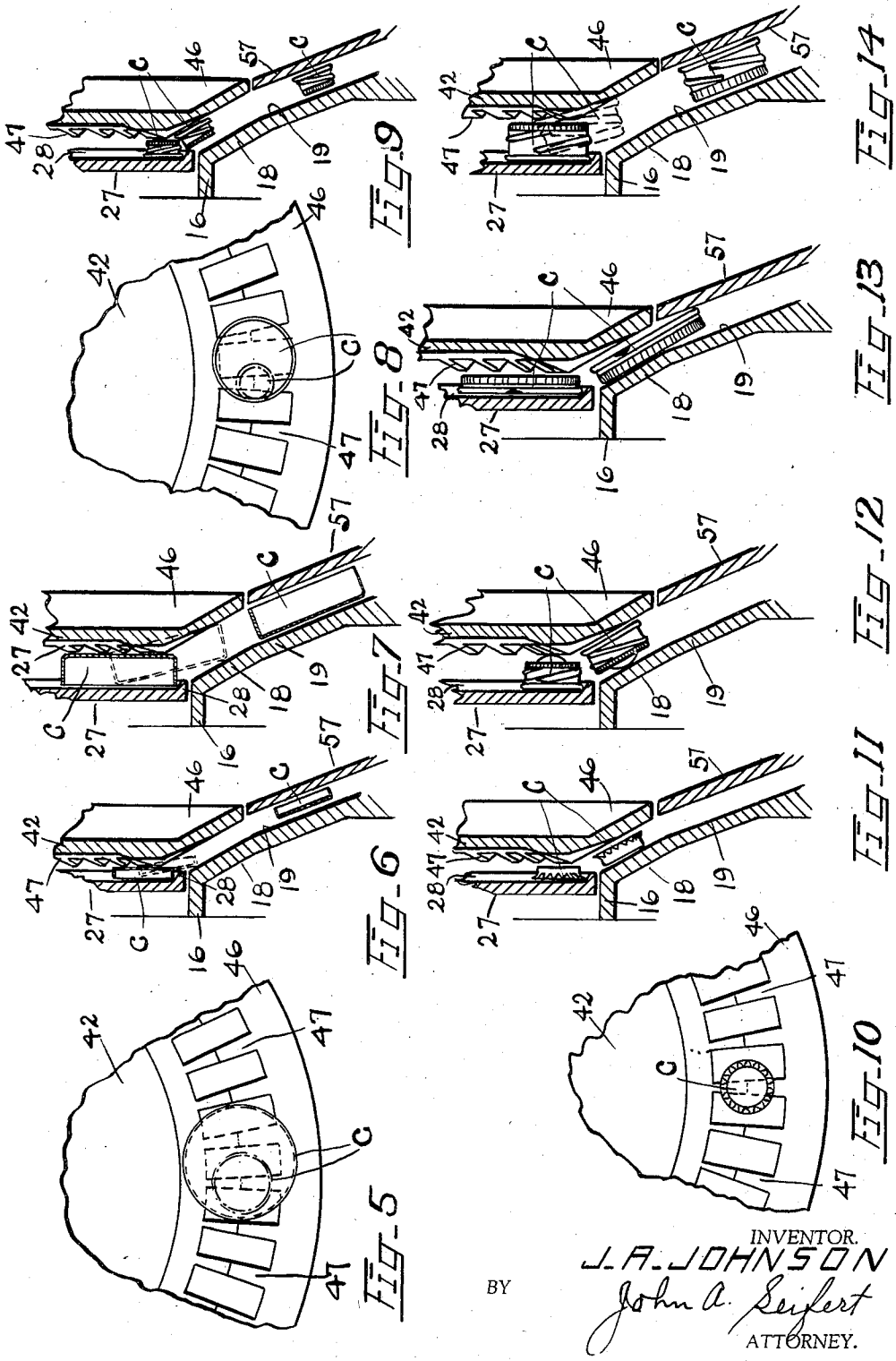

INVENTOR.
J. A. JOHNSON
BY John A. Seifert
ATTORNEY.

Patented July 26, 1938 2,124,618

UNITED STATES PATENT OFFICE

2,124,618

APPARATUS FOR SORTING AND FEEDING RECEPTACLE CLOSURE CAPS

John A. Johnson, Woodhaven, N. Y.

Application December 9, 1936, Serial No. 114,949

16 Claims. (Cl. 113—114)

This invention relates to apparatus for sorting predeterminedly positioned receptacle closure caps and feeding the sorted receptacle closure caps to apparatus for assembling liners in the closure caps or to apparatus for applying the closure caps to receptacles, and particularly for sorting and feeding closure caps having corrugations about the margin of the skirt to yieldingly engage an annular enlargement at the mouth of the receptacle and which closure caps are commonly termed "crown caps", or the skirt portion screw threaded for interlocking engagement with corresponding screw threads about the mouth of the receptacle, or a plain smooth surface skirt portion to be slipped on the smooth surface of the mouth of a receptacle, or having lugs in the skirt portion for locking engagement with protuberances or lugs on the mouth of a receptacle.

In the present forms of apparatus for sorting and feeding closure caps it is possible to sort and feed one type of closure cap only, either the crown type, or screw threaded, smooth skirt or lug type, therefore, necessitating the use of more than one form of apparatus, or the changing of parts of one form of apparatus to convert said apparatus to another form of apparatus, where a business deals in more than one type of closure cap.

It is the principal object of this invention to provide apparatus which is capable of sorting and feeding all types of closure caps without changing parts to adapt the apparatus to be used for the sorting and feeding of different types of closure caps.

It is another object of the invention to provide an apparatus to sort and feed closure caps having the same depth but of different diameters without adjusting the sorting means thereof.

It is a further object of the invention to provide a sorting disk which may readily be adjusted to sort closure caps of different depths.

It is still another object of the invention to provide a discharge channel and chute which are readily adjustable to accommodate closure caps of different diameters and depths.

A further object of the invention is to apply motive power directly to the closure cap sorting and feeding means and closure cap agitating means whereby the universal use of several power transmitting means is eliminated.

Other objects and advantages of the present invention will be more fully described hereinafter.

In the drawings accompanying and forming a part of this application, Figure 1 is a front elevational view of the apparatus forming the embodiment of the invention with a portion of a closure cap sorting disk broken away to show the structure of a rotatable drum in relation to an annular supporting member, and a discharge chute broken away.

Figure 2 is a longitudinal section of the apparatus taken on the line 2—2 of Figure 1 looking in the direction of the arrows, showing in dotted lines the positions of closure caps leaving a hopper casing to the rotatable drum, being prevented from passing between the drum and sorting disk, and leaving the space between the drum and disk and entering a discharge channel.

Figure 3 is a fragmentary side elevation of the lower portion of the annular supporting member showing in dotted lines an agitating wheel and driving means therefor in full lines.

Figure 4 is a cross sectional view of the discharge chute taken on the line 4—4 of Figure 2 looking in the direction of the arrows and showing in dotted lines the adjustment of the different parts of the chute for guiding closure caps of different diameters and depths.

Figure 5 is a fragmentary view of the inner face of the sorting disk having an annular series of equidistantly spaced angular protuberances and showing that closure caps of the slip-on type of all diameters are engaged by at least one of the protuberances.

Figure 6 is a fragmentary sectional view of a flange of the drum, the periphery of the disk and the annular supporting member, and showing a closure cap of the slip-on type in full lines having the closed end facing the disk being retained between the drum and disk, a closure cap in dotted lines with the open end facing the disk passing between the drum and disk and said latter closure cap in full lines having passed between the drum and disk.

Figure 7 is a view similar to Figure 6 showing the disk adjusted for sorting and feeding slip-on closure caps of greater depth.

Figure 8 is a view similar to Figure 5 showing closure caps having screw threaded skirt portions of different diameters engaged by at least one of the angular protuberances of the sorting disk.

Figure 9 is a view similar to Figure 6 showing screw threaded closure caps being sorted and fed by the drum and disk.

Figure 10 is a view similar to Figures 5 and 8 showing a crown cap being engaged by one of the angular protuberances.

Figure 11 is a view similar to Figures 6 and 9 showing crown caps being sorted and fed by the drum and disk.

Figure 12 is a view similar to Figure 7 showing

the sorting and feeding of screw threaded caps having an outwardly extending dome shaped protuberance at the closed end.

Figure 13 is a view similar to Figures 9 and 11 showing the sorting and feeding of closure caps having lugs in the skirt portions for locking engagement with screw threads on receptacles; and

Figure 14 is a view similar to Figures 7 and 12 showing the sorting and feeding of screw threaded closure caps of greater depth and diameter than the closure caps shown in Figure 9.

In carrying out the embodiment of the invention illustrated in the accompanying drawings there is provided a standard 15 adapted to be supported in an elevated position by a base portion 16' thereof mounted on a suitable pedestal (not shown) positioned relative to the apparatus to which the closure caps are to be fed. The upper portion of the standard 15 is arranged with an annular member having different cross sectional diameters, one face or end portion 16 being of smallest diameter and the other face or end portion 17 of largest diameter with an intermediate connecting portion 18 uniformly increasing in diameter from the face portion 16 to the face portion 17 and extending in an oblique direction relative to the horizontal planes in which the portions 16 and 17 extend. At the lower portion of the annular member in vertical alinement with the axis thereof, the horizontal face portion 17 is cut away and the standard 15 is arranged with a sloping face 19 extending from and co-operating with the oblique intermediate portion 18 to form a slide for the discharged closure caps, which will be more fully described hereinafter.

The standard 15 supports a hopper casing 20 having an opening 21 at the upper portion through which closure caps C are delivered to the hopper and a bottom wall declining toward an opening 22 in the front wall of the casing through which the closure caps are discharged from the casing. The hopper casing 20 is mounted on the annular member of the standard 15 with the discharge opening 22 centrally of and in spaced relation to the face portion 16 of said annular member by a series of spacing members 23 secured at one end in bosses 24 arranged on the portion 16 with the opposite ends of the spacing members abutting the front wall of the hopper casing 20 encircling the opening 22 and secured thereto by bolts 25 engaged in perforations in the casing wall and the spacing members 23, as clearly shown in Figure 2.

The closure caps leaving the casing 20 through the opening 22 will enter a tapering drum 26 having a laterally extending flange 27 at the end of larger diameter arranged with an annular ridge about the outer periphery thereof with the inner side bevelled, as at 28. The drum is rotatably supported with the end of smaller diameter in registry with the discharge opening 22 of the hopper casing 20 and the flange 27 terminating within the face portion 16 adjacent the intermediate portion 18 of the annular member by spider arms 29 fixed to and extending inwardly from the drum to a hub 30 fixedly engaged on an end portion of a shaft 31 by a key, as indicated in dotted lines at 32 in Figure 2, and retained against longitudinal movement by an enlarged screw threaded intermediate portion 33 of the shaft and a washer and nut engaged on the end of the shaft, as at 34. The opposite end of the shaft 31 is rotatably mounted in bearing bosses 35 of parallelly spaced portions of an arm 36 pivotally supported at one end on a pin 37 engaged in said end of the arm and spaced ears 38 extended from the face portion 17 of the annular member of the standard 15, the opposite end of the arm 36 being bifurcated to be engaged by a hasp 39 pivotally mounted on the face portion 17 and releasably retained in engagement with the bifurcation of the arm 36 by a wing nut 40 screw threaded onto the hasp, as shown in Figure 1, so that the drum may be swung on the pivot pin 37 into or out of the annular member of the standard 15, and be retained in position within the annular member.

The closure caps are fed from the hopper casing 20 by the rotation of the drum 26 in co-operation with a sorting disk 42 having an internally screw threaded hub 43 projecting centrally from a face thereof and adjustably mounted on the enlarged screw threaded portion 33 of the shaft 31, so that the disk may be adjusted toward and away from and positioned in predetermined spaced relation to the drum flange to permit the feeding of caps of different depths, as shown in Figures 6, 7, 9, 11 to 14, inclusive. The disk 42 is releasably retained in adjusted position by a split portion 44 arranged at the free end of the hub with alined openings, one of said openings being screw threaded for the engagement of a clamping screw 45 adapted to draw the sections of the split portion together and clamp the hub to the shaft whereby rotation of the shaft will be imparted simultaneously to the drum and disk. The disk 42 is arranged with a peripheral portion 46 extending at an obtuse angle from the outer face thereof from which the hub 43 projects so that said peripheral portion will extend in spaced relation with the intermediate oblique portion 18 of the annular member and the sloping face 19 of the standard 15, the peripheral edge of said portion co-operating with the face portion 17 of the annular member to prevent discharge of the closure caps from the drum 26 except at the sloping face portion 19. The peripheral portion 46 of the disk will form the outer face of the disk to dish shape in cross section, as shown in Figure 2. On the inner face of the disk is arranged an annular series of triangular protuberances 47 equidistantly spaced from each other a distance less than the diameter of the smallest closure cap now in universal use, and the faces of the angle portions or the exposed sides of the triangle of the protuberances are integral with the inner face of the disk, as shown in Figures 5, 8 and 10, with the outer angle portions extending as continuations of the peripheral portion 46. The protuberances taper from the inner angle portions to the outer angle portions, as shown in Figures 1, 5, 8 and 10, and they are radially disposed relative to the shaft 31.

In the operation of the apparatus the closure caps are tumbled about the drum and forced against the disk where they come into contact with the protuberances 47. Should a closure cap be positioned so that the closed end thereof is engaged by a protuberance or protuberances, depending upon the diameter of the closure cap, the open end of the closure cap will engage the ridge 28 of the drum flange 27 and be prevented from passing between the drum flange and disk, and a closure cap having the open end facing the protuberances will be permitted to pass between the drum flange and disk as the opposite closed end will be positioned out of engagement with the ridge 28 due to the fact that the skirt portion of

the closure cap will be positioned in the spaces between the protuberances, as shown in Figures 6, 7, 9 and 14. The closure caps that are engaged by the ridge 28 and prevented from being fed by the apparatus are disengaged from said position by the rotation of the drum and disk and properly positioned relative to the ridge 28 and the protuberances 47 by the continual rotation of the drum and disk.

The closure caps after they pass between the ridge 28 and the protuberances 47 will engage and slide down the sloping face 19 of the bracket 15 with the closed ends thereof lowermost under the guidance of the peripheral portion 46 of the disk 42. To assure a continuous discharge of closure caps over the sloping face 19 and prevent a jamming of the closure caps, the sloping face 19 is arranged with a channel by extending one end of the portion 17 of the annular member in a vertical direction along one side of the sloping face 19, as at 48 in Figure 1, to form one side of the channel. The other side of the channel is adjustable to accommodate closure caps of different diameters and comprises an elongated plate 49 having at one end an extension 50 extending at an obtuse angle from the plate and said plate being slidably mounted in a slideway 51 arranged in a portion of the bracket 15 and the annular member extending below and tangentially of the portion 17, so that the upper edge of the plate will be a support for the closure caps that have passed between the ridge 28 and the protuberances 47 and extend as a continuation of the portion 17, as shown in Figure 1. The plate 49 is supported and adjusted in the slideway 51 by a lead screw 52 screw threaded at one end into the plate with the opposite end rotatably mounted in a bifurcation 53 extending from the end of the slideway and said screw having a manipulating head exteriorly of said bifurcation to facilitate the adjustment of the screw and plate portion 50 toward and away from the wall 48. The plate is releasably retained in adjusted position by a clamping screw 54 engaging an elongated slot 55 in the plate 49 and screw threaded in the bottom wall of the slideway to clamp a washer 54' against the plate, as shown in Figure 1. The plate 49 is shown in full lines in Figure 1 in position to guide closure caps of smallest diameter and in dotted lines to guide closure caps of greatest diameter. The plate 49 has a curved corner, as at 56, to facilitate the guiding of the closure caps into the vertical channel of the sloping face 19.

To maintain the closure caps in a single layer and in flat condition in the channel formed by the wall 48 and plate 49, 50, there is provided a cover plate 57 of a shape to completely cover the space above the sloping face 19 between the wall 48 and the slideway 51 and having a boss 58 at one side portion projecting from the outer face thereof and arranged with a restricted opening at the upper end, as at 59 in Figure 2, for the rotatable mounting of a lead screw 60 having a knurled head 61 attached to an end thereof projecting exteriorly of the boss. The opposite end of the lead screw is screw threaded in a post 62 fixed in and extending perpendicularly from the portion of the standard 15 forming the slideway 51 to slidably engage the boss 58, so that the actuation of the lead screw will move the boss 58 on the post 62 and position the plate 57 toward and away from the sloping face 19 to accommodate closure caps of different depths on the sloping face 19, as shown in Figures 6, 7, 9, 11 to 14, inclusive. The plate 57 is releasably retained in adjusted position by a set screw mounted in the boss 58 to abut the post 62, as at 63.

The closure caps are urged to enter the channel 19, 48, 50 by an agitating wheel 64 having serrations about the periphery thereof and rotatably mounted in a chamber formed by a recess 64' in the standard 15 and casing 65 bolted to the standard and forming a part of the channel wall 48. The wheel 64 is mounted to have a peripheral portion thereof strike the closure caps in the channel 19, 48, 50 by a shaft 66 rotatably supported in a bearing boss 67 integral with and projecting from the standard 15 and a bearing boss integral with and extending exteriorly from the casing 65.

The drum 26, disk 42 and agitating wheel 64 are actuated by the same power means, such as an electric motor, not shown, through a drive belt 69 engaged about a pulley on the drive shaft of the motor and a pulley 70 fixedly mounted on the shaft 31 between the parallel portions of the arm 36 with a stretch of the belt engaging a portion of a pulley 71 fixedly mounted on an end portion of the shaft 66 extending from the bearing boss 68.

The closure caps having the open ends facing the disk 42 are delivered from the channel 19, 48, 50 to a depository, or an apparatus for assembling sealing pads in the closure caps, or to means to apply the closure caps to receptacles, by a chute comprising a channel member 72 having at one end a rectangular portion extending transversely thereof to engage a recessed portion portion in the standard 15, as at 73 in Figure 2, and secured in said recess by screws 74. The channel member 72 is arranged with adjustable guide means to maintain the feed of closure caps of different sizes in a single column in said channel member in the form of an adjustable side wall comprising a plate or longitudinal strip of material 75 adjustably supported in a side wall of the channel member 72 to have movement toward and away from the opposite side wall of the channel member by rods 76 slidably mounted in said side wall of the channel member with one end fixed to the plate 75 and the opposite end extending exteriorly of the side wall and arranged with a manipulating knob 77. The number of rods 76 used depends on the length of the chute and each rod is retained in adjusted position by set screw 78 mounted in the side wall to engage the rod. The guide plate 75 is shown in Figures 1 and 4 in full lines in position to guide closure caps of smallest diameter and in dotted lines in position to guide closure caps of greatest diameter. To maintain closure caps in a single layer and in flat condition on the chute in co-operation with the cover plate 57 there is provided a longitudinal member 79 slidably supported on rods 80 and retained in adjusted position on said rods corresponding to the adjusted position of the plate 75 by set screws 81 threaded in one edge of the longitudinal member to abut the rods 80. The rods are adjustably mounted on the side wall opposite to the side wall of the channel member in which the rods 76 are mounted by fixing one end of the rods in brackets 82 adjustably mounted on said side wall of the channel member by clamping screws 83 screw threaded in the side wall and engaged in an elongated opening 84 in each bracket with a washer 85 interposed between the heads of the clamping screws and the brackets, the elongated openings permitting the brackets to be adjusted in a ver-

tical direction relative to the plane of the channel member to position the longitudinal member 79 toward and away from the closure caps on the channel member to guide closure caps of different depths, as shown in Figure 4.

Due to the bevelled ridge 28 of the drum flange 27, the peripheral portion 46 and angular protuberances 47 of the disk 42, and the sloping face 19 of the standard 15, any type of closure caps, such as the slip-on, screw threaded, lug and crown types of closure caps, as shown in Figures 5 to 14, inclusive, may readily be sorted and fed by the apparatus by properly adjusting the disk 42, plates 49, 57, 75, longitudinal member 79 and bracket 82. The sorting disk 42 is not adjusted for the different types of closure caps having different diameters but of the same depth, as the protuberances 47 are spaced from each other to have the closure caps of smallest diameter engaged by at least one of said protuberances. The disk 42 is adjusted only for closure caps of different depths by loosening the clamping screw 45 and rotating the disk on the screw threaded portion 33 of the shaft 31. The closure plate 57 and the bracket member 82 are adjusted correspondingly to the adjustment of the disk 42 on the threaded portion 33, so that the spaces between the peripheral portion 46 and sloping face 19, between the closure plate 57 and sloping face 19, and between the lower edge of the longitudinal member 79 and the bottom of the channel member 72, will be the same. The plate 75 is adjusted relative to the side wall of the channel member 72 opposite to the wall of said channel member in which the rods 76 are mounted to guide closure caps of different diameters in a single column and the longitudinal member 79 is adjusted on the rods 80 correspondingly to the adjustment of the plate 75 to extend centrally of closure caps of different diameters, as shown in Figures 1 and 4. The closure caps having the open ends thereof engaged by the bevelled ridge 28 of the drum flange 27 will be prevented from passing to the sloping face 19 by the protuberances 47 engaging the closed ends or a protuberance extending therefrom, as shown in Figure 12, and will be returned to the drum by the rotation of the drum and disk.

While I have illustrated one embodiment of my invention, it will be obvious that various modifications may be made in the construction and arrangement of parts, and that portions of the invention may be used without others and come within the scope of the invention.

Having thus described my invention, I claim:

1. In apparatus for sorting and feeding closure caps, a hopper casing having a discharge outlet opening, a drum rotatably mounted with one end in registry with the outlet opening of the hopper casing, a disk rotatably mounted in spaced relation with the end of the drum opposite the end in registry with the outlet opening of the hopper casing and arranged with a peripheral portion extending from the disk in an outwardly oblique direction from the drum and a series of triangular protuberances on the inner face of the disk equidistantly spaced from each other and in opposed relation to the adjacent end of the drum, said protuberances being adapted to engage in closure caps having the open ends thereof facing the disk and permit passage of said closure caps between the drum and disk.

2. In apparatus for sorting and feeding closure caps, a hopper casing having a discharge opening, a drum rotatably mounted with one end in registry with the discharge opening of the hopper casing, a disk rotatably mounted in spaced relation with the end of the drum opposite the end of the drum in registry with the discharge opening of the hopper casing and arranged with a peripheral portion extending from the disk in an outwardly oblique direction from the drum and an annular series of triangular protuberances on the inner face of the disk adjacent the outwardly extending peripheral portion thereof, said protuberance having a side portion of the triangle extending in line with said peripheral portion and said triangular protuberances being in opposed relation to the adjacent end of the drum to engage in closure caps and permit passage of said closure caps between the drum and disk.

3. In apparatus for sorting and feeding closure caps, a hopper casing having a discharge opening, a drum rotatably mounted with one end in registry with the discharge opening of the hopper casing and the opposite end being arranged with a lateral flange having a peripheral ridge extending from the face thereof, a disk rotatably mounted in spaced relation with the flanged end of the drum and having a peripheral portion extending from the disk in an outwardly oblique direction from the drum, and said disk being arranged with an annular series of triangular protuberances arranged on the face of the disk in opposed relation to the flange of the drum adapted to co-operate with the peripheral ridge of the drum flange to permit passage of sidewardly extending closure caps having the open ends facing the protuberances between the disk and drum flange and prevent passage of closure caps having the open ends facing the drum flange between the drum flange and disk.

4. Apparatus for sorting and feeding closure caps as claimed in claim 3, wherein the inner side wall of the ridge of the drum flange extends at an angle intersecting the peripheral portion of the disk.

5. In apparatus for sorting and feeding closure caps, an annular member, a hopper casing supported by the annular member and having a discharge opening in spaced relation with the annular member, a drum rotatably supported by the annular member with one end adjacent to and in registry with the discharge opening of the hopper casing and the opposite end of the drum terminating in the annular member, a disk rotatably supported by and positioned in the annular member and having the peripheral portion extending in spaced relation to a portion of the annular member intermediate the opposite ends thereof, and said disk having an annular series of triangular protuberances arranged thereon adjacent to the peripheral portion of the disk and in opposed relation to the end of the drum in the annular member to engage in closure caps and permit said caps to pass through the space between the peripheral portion of the disk and the intermediate portion of the annular member and prevent closure caps having the closed ends facing the protuberances from passing through said space.

6. Apparatus for sorting and feeding closure caps as claimed in claim 5, wherein the intermediate portion of the annular member and the peripheral portion of the disk extend in an outwardly oblique direction from the drum.

7. Apparatus for sorting and feeding closure caps as claimed in claim 5, wherein the opposite end portions of the annular member are of different diameters concentrically of the axis of rotation of the drum and disk, and the intermediate

portion of the annular member extends at an obtuse angle to the opposite end portions.

8. Apparatus for sorting and feeding closure caps as claimed in claim 5, wherein the outer end of the annular member at the lower portion thereof extends as a continuation of the intermediate portion of said member to form a slide for closure caps passing between the intermediate portion of the annular member and peripheral portion of the disk.

9. In apparatus for sorting and feeding closure caps of different sizes, a hopper casing having a discharge opening, a shaft rotatably mounted centrally of the discharge opening of the hopper casing and having a screw threaded portion, a drum fixed on the shaft with one end adjacent to and in registry with the discharge opening of the hopper casing, a disk having an internally screw threaded hub engaged on the screw threaded portion of the shaft to provide the disk with adjustment toward and away from the end of the drum opposite the end adjacent to the discharge opening of the hopper casing, said hub having a longitudinally split portion, and means adjustably engaged in the split portion of the hub of the disk and adapted to be actuated to clamp the hub of the disk to the shaft and retain the disk in predetermined spaced relation to the drum.

10. In apparatus for sorting and feeding closure caps of different sizes, a hopper casing having a discharge opening, a shaft rotatably mounted centrally of the discharge opening, a drum fixed on the shaft with one end adjacent to and in registry with the discharge opening, a disk mounted on the shaft to rotate with and have adjustment on the shaft toward and away from the end of the drum opposite the end adjacent the discharge opening and said disk being adapted to be retained on the shaft in predetermined spaced relation with said end of the drum, a pulley fixed on the shaft, a wheel rotatably mounted adjacent the peripheries of the drum and disk with a peripheral portion thereof positioned in a plane extending in the space between the drum and disk to agitate the closure caps, a second pulley connected to said wheel, and a belt to operatively connect said pulleys to a source of power and rotate the drum, disk and wheel.

11. In apparatus for sorting and feeding closure caps of different diameters and depths, a hopper casing having a discharge opening, a drum rotatably mounted with one end juxtaposed to and in registry with the discharge opening, a disk mounted to rotate with the drum and have adjustment toward and away from the end of the drum opposite the end juxtaposed to the discharge opening to predeterminedly space the disk from the end of the drum and permit the passage of closure caps of different depths through said space, and said disk having an outwardly extending peripheral portion extending outwardly at an acute angle from the end of the drum, an annular member encircling the space between the drum and disk having a portion with a channel extending from the lower portion thereof and leading from the space between the drum and disk, and a plate removably mounted on the annular member to extend over the channel as a continuation of the peripheral portion of the disk and adapted to have adjustment toward and away from the channel portion of the annular member to correspond to the adjustment of the disk relative to the drum.

12. In apparatus for sorting and feeding closure caps of different diameters and depths as claimed in claim 11, a chute extended from the channel of the annular member, and a guide rail supported by the chute to extend longitudinally above the chute and have adjustment toward and away from the chute correspondingly to the adjustment of the plate to maintain closure caps of different depths in flat position on the chute.

13. In apparatus for sorting and feeding closure caps of different diameters and depths as claimed in claim 11, a channel shaped chute extended from the channel of the annular member, a longitudinal member adjustably mounted in a side wall of the chute to constitute a side guide wall and accommodate the chute for closure caps of different diameters, a support adjustably mounted on the opposite side wall of the chute to have movement in a direction perpendicularly to the chute and having a lateral member extending transversely above the chute, and a longitudinal guide rail slidably mounted on the lateral member of the support to maintain closure caps of different depths in flat position on the chute and have adjustment corresponding to the adjustment of the side guide wall.

14. In apparatus for sorting and feeding closure caps of different diameters and depths, a hopper casing having a discharge opening, a drum rotatably mounted with one end juxtaposed to and in registry with the discharge opening of the hopper casing, a disk mounted to rotate with the drum and have adjustment toward and away from the end of the drum opposite the end in registry with the discharge opening of the hopper casing and having a peripheral portion extending beyond the drum at an acute angle thereto, said disk having an annular series of triangular protuberances equidistantly spaced about the inner face of the disk in opposed relation to the drum, the distance between said protuberances being less than the diameter of the smallest closure cap the apparatus is adapted to feed, an annular member encircling the drum and disk having a portion intermediate the opposite ends thereof extending in spaced relation with the angular peripheral portion of the disk with a channel portion extending beyond the angular peripheral portion of the disk at the lower section of the annular member, and a plate slidably mounted on the annular member and having an end portion extending beyond a side wall of the channel portion of the annular member in opposed relation to the opposite side wall of said channel portion and adapted to have adjustment toward and away from said opposite side wall of the channel portion.

15. In apparatus for sorting and feeding closure caps of different diameters and depths as claimed in claim 14, a channel shaped chute extended from the channel portion of the annular member, and a longitudinal member adjustably mounted in a side wall of the chute to have adjustment corresponding to the adjustment of the plate to accommodate the chute for closure caps of different diameters.

16. Apparatus for sorting and feeding closure caps of different diameters and depths as claimed in claim 14, wherein the plate is mounted on the annular member to extend tangentially of the outer end of the annular member and adapted to support the closure caps positioned between the disk and drum.

JOHN A. JOHNSON.