US010288156B1

(12) **United States Patent**
**Bennett**

(10) **Patent No.: US 10,288,156 B1**
(45) **Date of Patent: May 14, 2019**

(54) **TRANSMISSION ASSEMBLY**

(71) Applicant: **Hydro-Gear Limited Partnership**, Sullivan, IL (US)

(72) Inventor: **Michael L. Bennett**, Sullivan, IL (US)

(73) Assignee: **Hydro-Gear Limited Partnership**, Sullivan, IL (US)

( * ) Notice: Subject to any disclaimer, the term of this patent is extended or adjusted under 35 U.S.C. 154(b) by 150 days.

(21) Appl. No.: **15/615,614**

(22) Filed: **Jun. 6, 2017**

**Related U.S. Application Data**

(63) Continuation of application No. 14/484,559, filed on Sep. 12, 2014, now Pat. No. 9,677,574.

(60) Provisional application No. 61/876,905, filed on Sep. 12, 2013.

(51) **Int. Cl.**
***F16H 39/42*** (2006.01)
***F16H 61/40*** (2010.01)
*F16H 57/02* (2012.01)

(52) **U.S. Cl.**
CPC ..... ***F16H 39/42*** (2013.01); ***F16H 61/40*** (2013.01); *F16H 2057/02086* (2013.01)

(58) **Field of Classification Search**
CPC ..... F16H 39/42; F16H 61/40; F16H 61/42; F16H 2057/02086
See application file for complete search history.

(56) **References Cited**

U.S. PATENT DOCUMENTS

| | | | |
|---|---|---|---|
| 1,256,949 A | 2/1918 | Sundh | |
| 1,840,869 A | 1/1932 | Rayburn | |
| 1,840,873 A | 1/1932 | Rayburn | |
| 2,678,536 A | 5/1954 | Morgan | |
| 3,751,924 A | 8/1973 | Brown et al. | |
| 3,858,487 A | 1/1975 | Abe et al. | |
| 4,903,545 A | 2/1990 | Louis et al. | |
| 5,314,387 A | 5/1994 | Hauser et al. | |
| 5,592,818 A | 1/1997 | Haag et al. | |
| 6,122,996 A | 9/2000 | Hauser et al. | |
| 6,178,746 B1 | 1/2001 | Thoma et al. | |
| 6,248,037 B1 | 6/2001 | Forster | |
| 6,477,838 B1 | 11/2002 | Thoma et al. | |
| 6,983,815 B2 * | 1/2006 | Abend | A01D 34/6806 180/375 |

(Continued)

FOREIGN PATENT DOCUMENTS

| | | |
|---|---|---|
| DE | 4311501 | 10/1993 |

OTHER PUBLICATIONS

Eaton Hydrostatic Transmissions—Model 6/7, Repair Manual No. 7-403, Oct. 1988, 16 pp.
U.S. Appl. No. 15/477,932, filed Apr. 3, 2017.

*Primary Examiner* — Thomas E Lazo
(74) *Attorney, Agent, or Firm* — Neal, Gerber & Eisenberg LLP

(57) **ABSTRACT**

A compact hydraulic transmission assembly using an axial piston pump disposed on a center section that also provides a cylindrical running surface for a radial piston motor. This design provides for a compact and low profile assembly, while the combination of an axial piston pump with a radial piston motor provides improved efficiency for higher torque output. The radial piston motor includes a lower mass piston block that improves performance. The center section includes an extension extending outwardly from its circumference and including a check port; and a mounting lobe for securing the center section is secured to the pump housing.

**20 Claims, 12 Drawing Sheets**

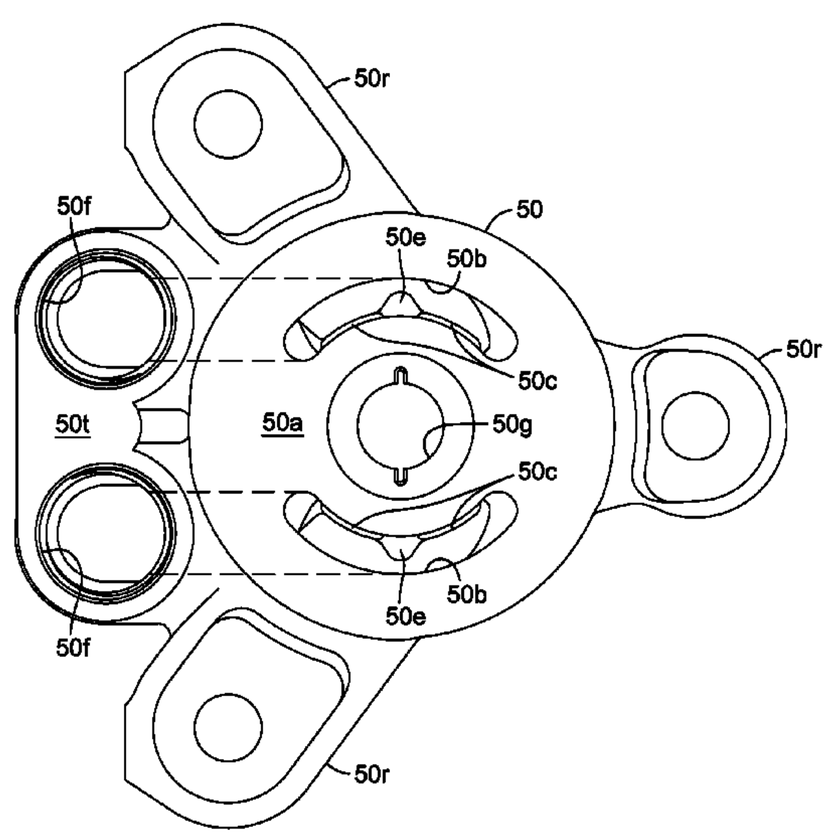

(56) **References Cited**

U.S. PATENT DOCUMENTS

| | | | | |
|---|---|---|---|---|
| 7,134,276 | B1 | 11/2006 | Langenfeld et al. | |
| 7,497,082 | B1 | 3/2009 | Bennett et al. | |
| 7,942,778 | B2 | 5/2011 | Williames | |
| 8,464,610 | B1 * | 6/2013 | Langenfeld | F16H 39/06 74/606 R |
| 8,635,867 | B2 | 1/2014 | Dong et al. | |
| 8,739,905 | B1 * | 6/2014 | Bennett | B60K 17/28 180/364 |
| 8,820,066 | B1 | 9/2014 | Langenfeld | |
| 8,984,871 | B1 * | 3/2015 | Probst | F15B 11/08 60/387 |
| 9,610,840 | B1 | 4/2017 | Langenfeld | |
| 9,677,574 | B1 * | 6/2017 | Bennett | F16H 39/14 |
| 9,862,268 | B1 * | 1/2018 | Bennett | F16H 9/26 |
| 2015/0323051 | A1 | 11/2015 | Simon et al. | |

* cited by examiner

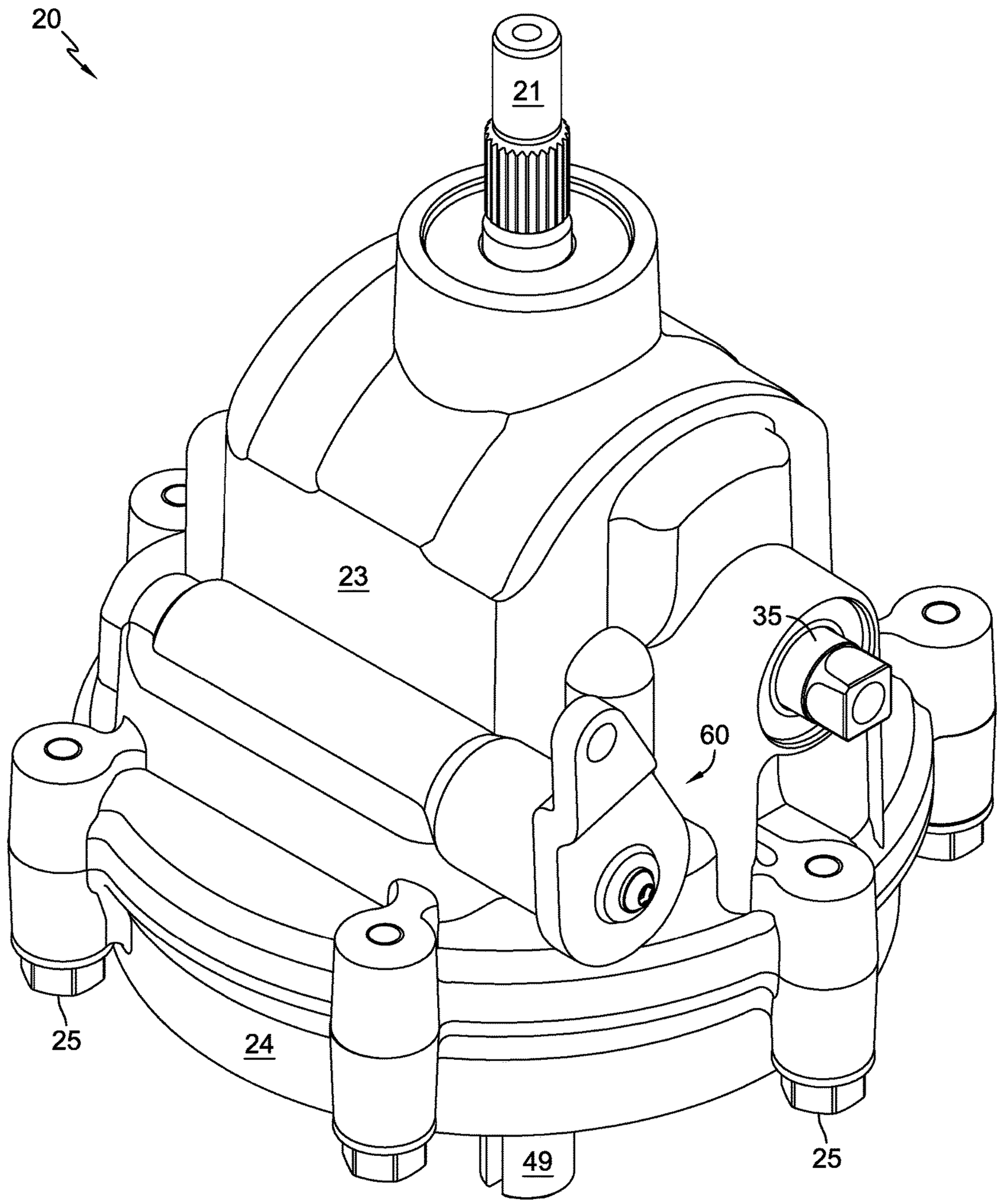


FIG. 1

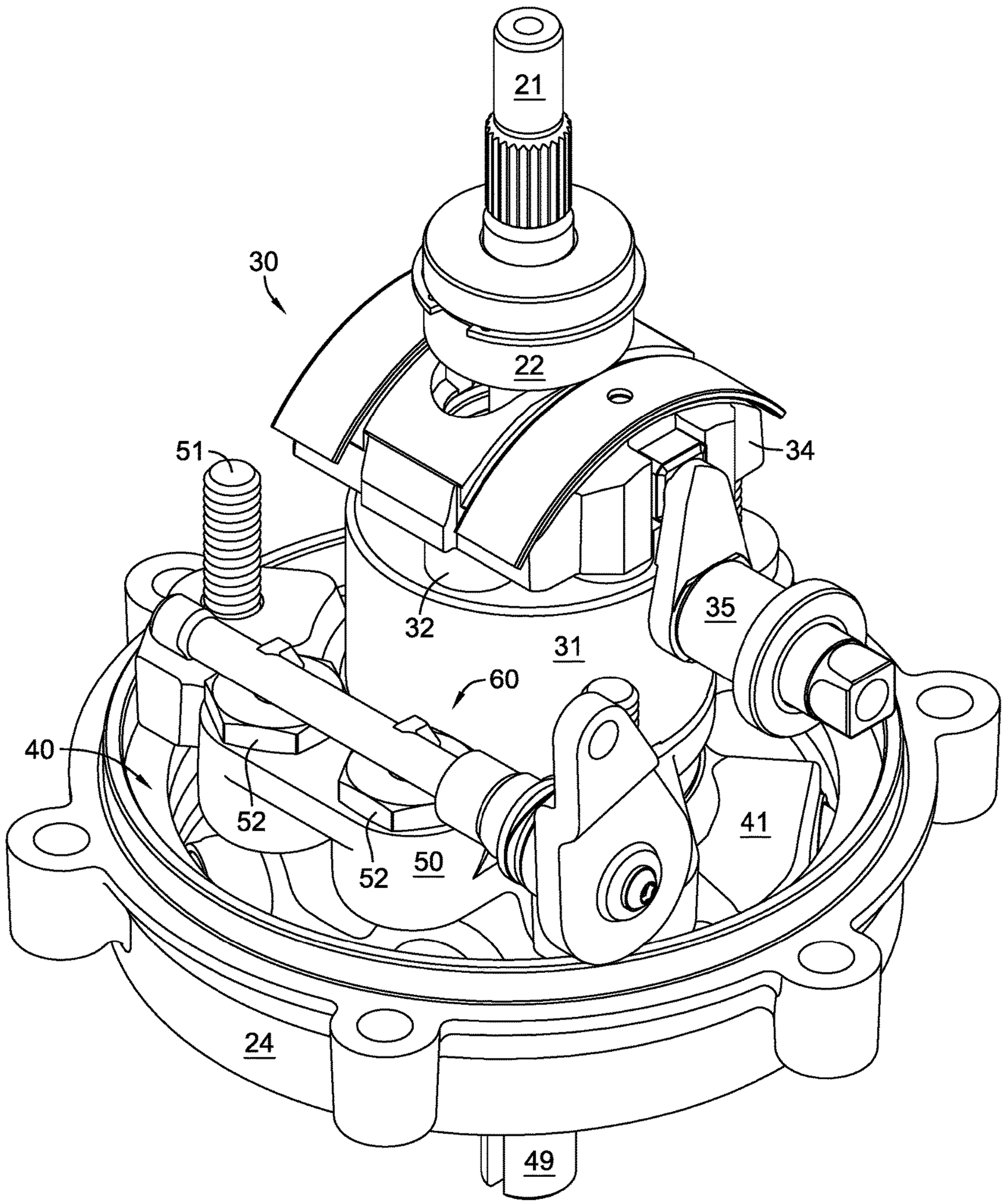


FIG. 2

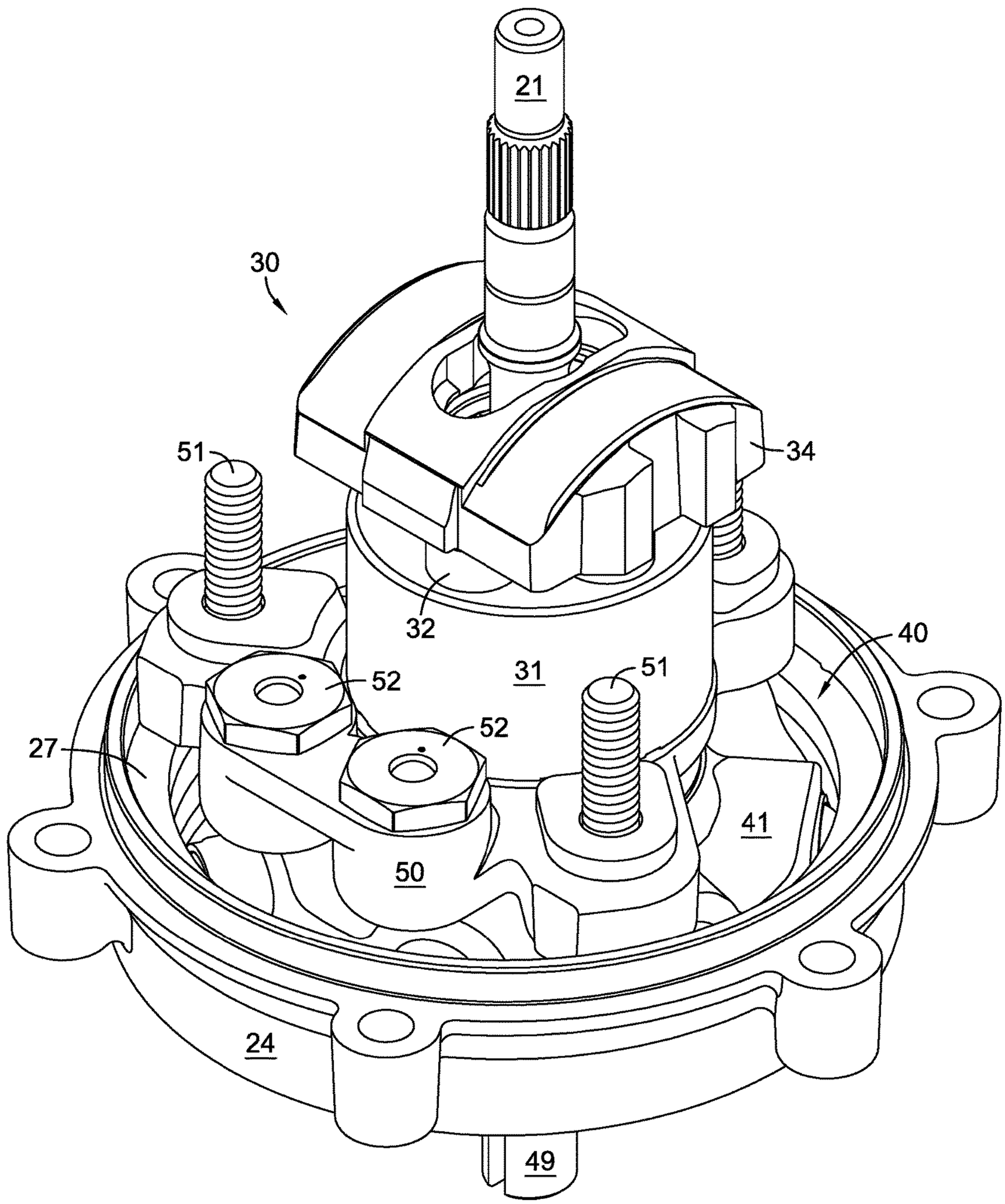


FIG. 3

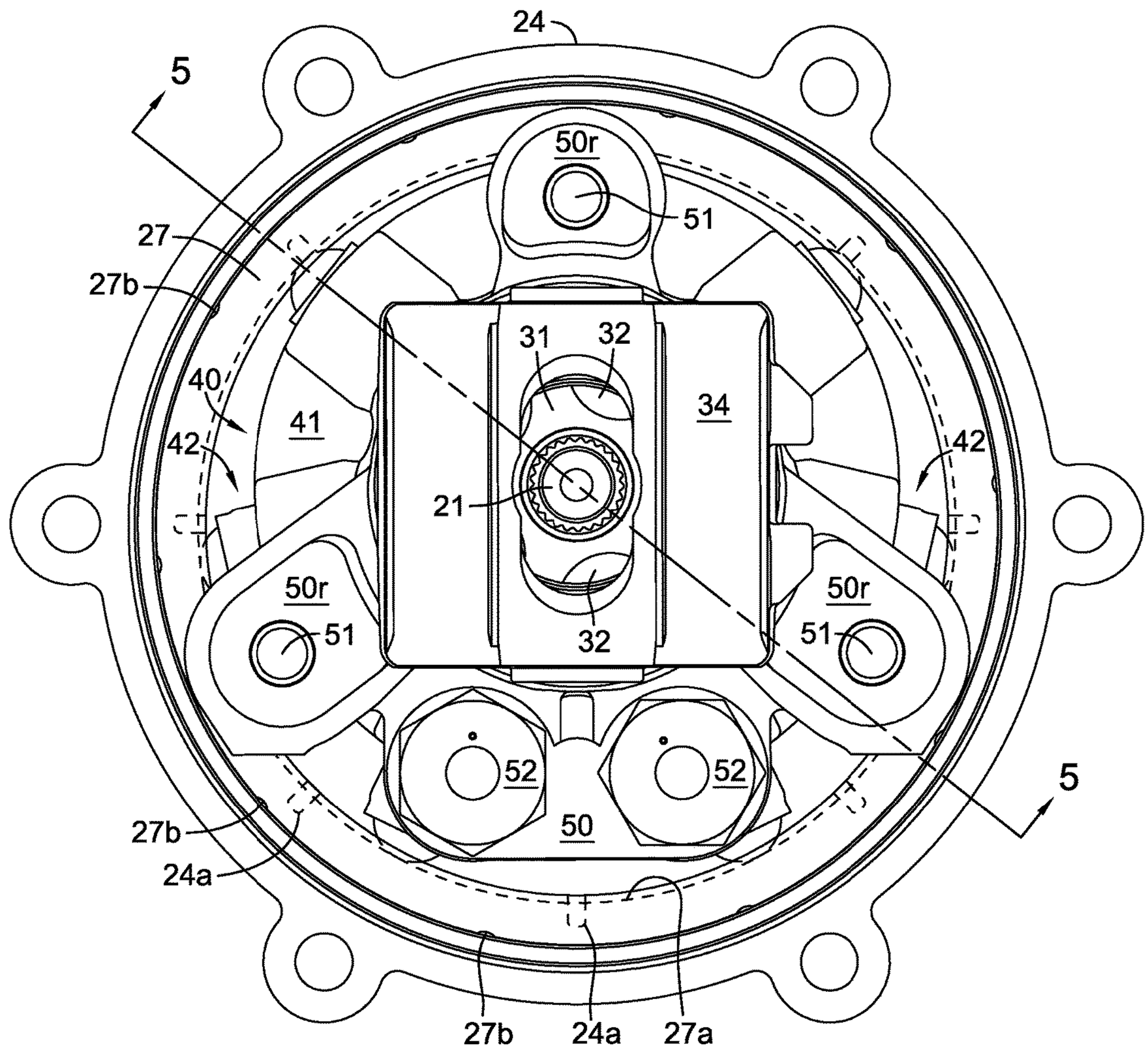
24
5
50r
51
27
27b
31
32
40
41
34
42
42
21
50r
51
50r
51
32
52
52
5
27b
50
24a
27b
24a
27a

FIG. 4

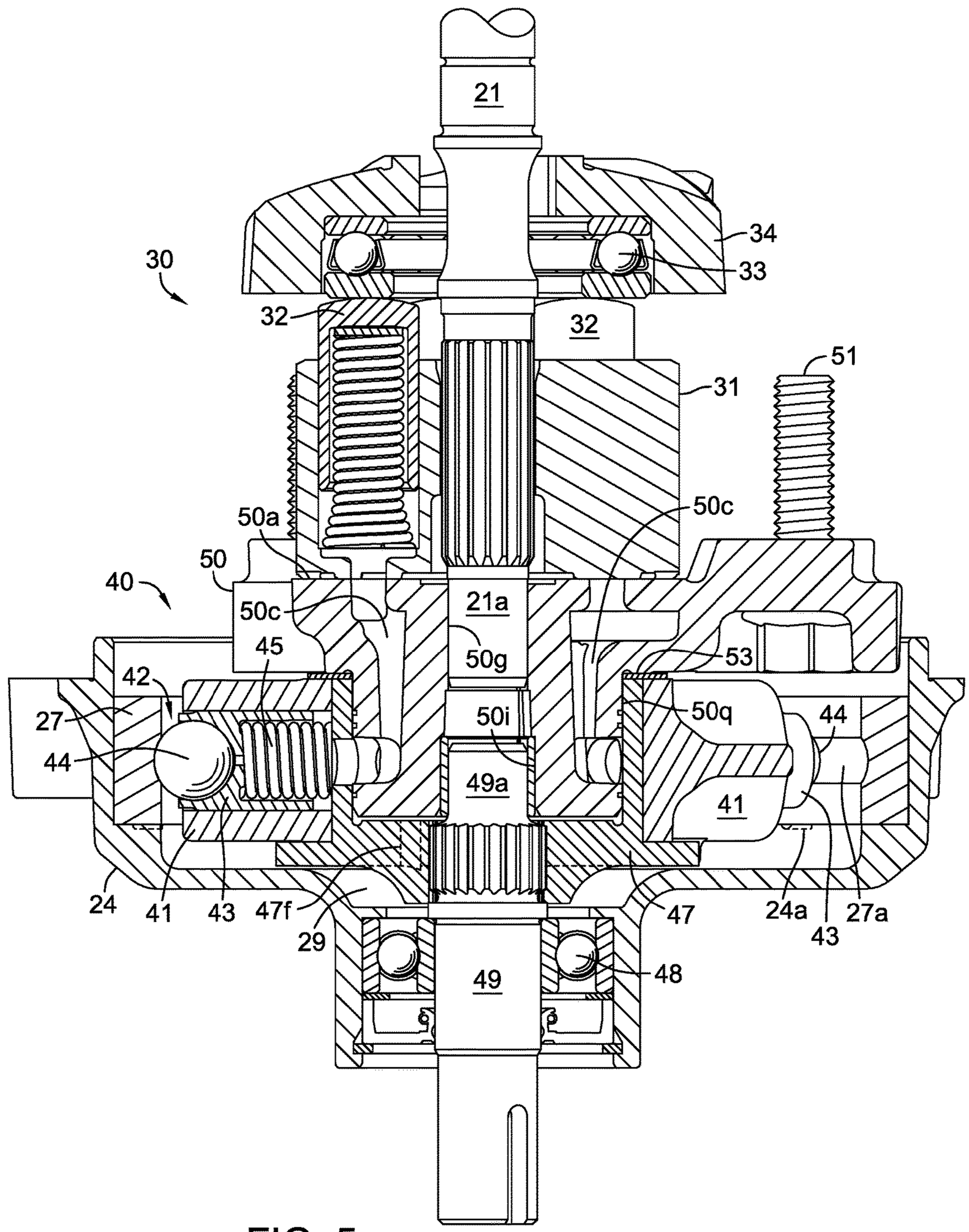
21
34
30
33
32
32
51
31
50a
50c
50
40
21a
50c
45
50g
53
42
27
50q
44
50i
44
49a
41
24
41
43
47f
29
47
24a
43
27a
49
48

FIG. 5

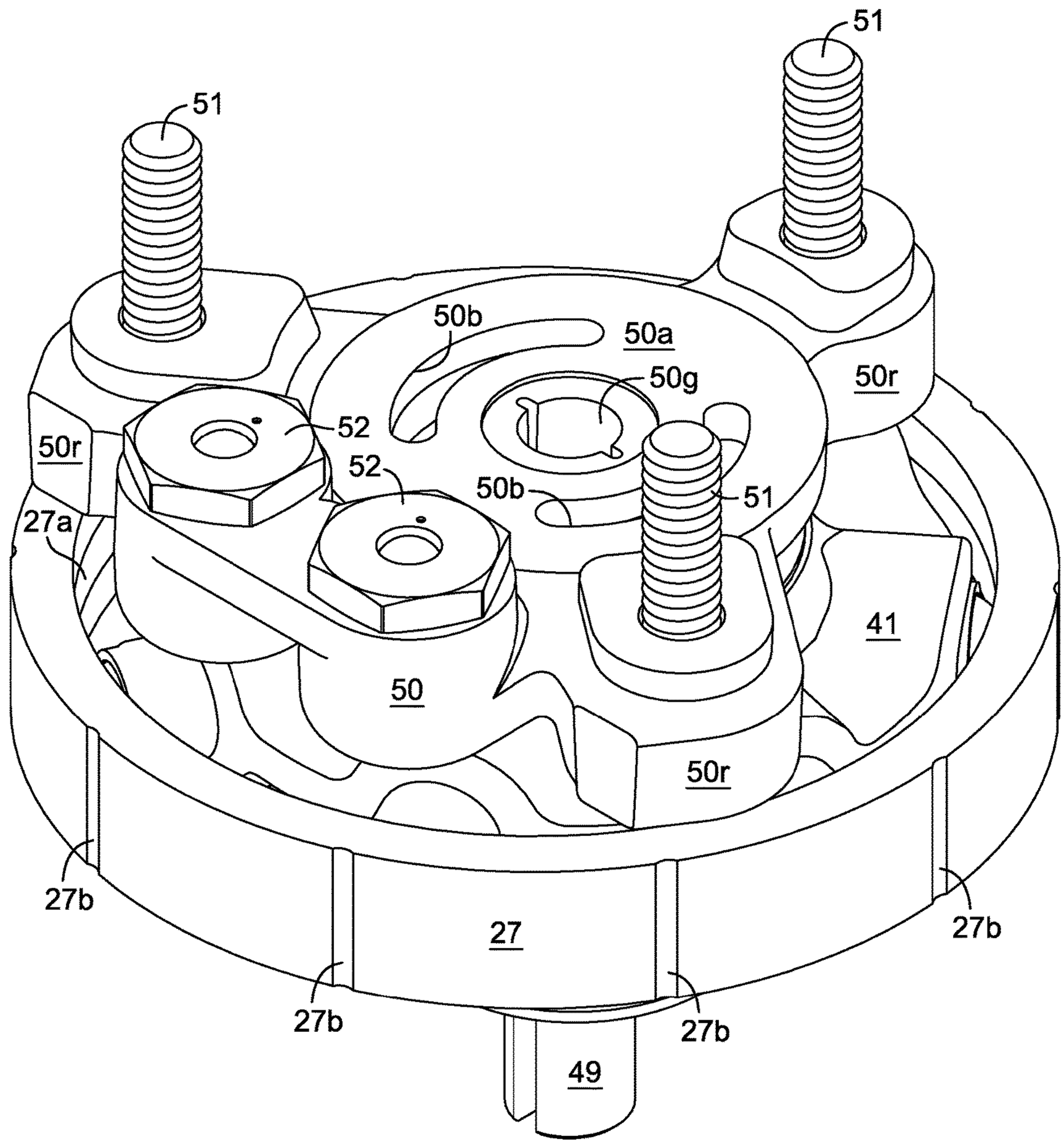
51
51
50b
50a
50g
50r
52
52
50r
50b
51
27a
41
50
50r
27b
27
27b
27b
27b
49

FIG. 6

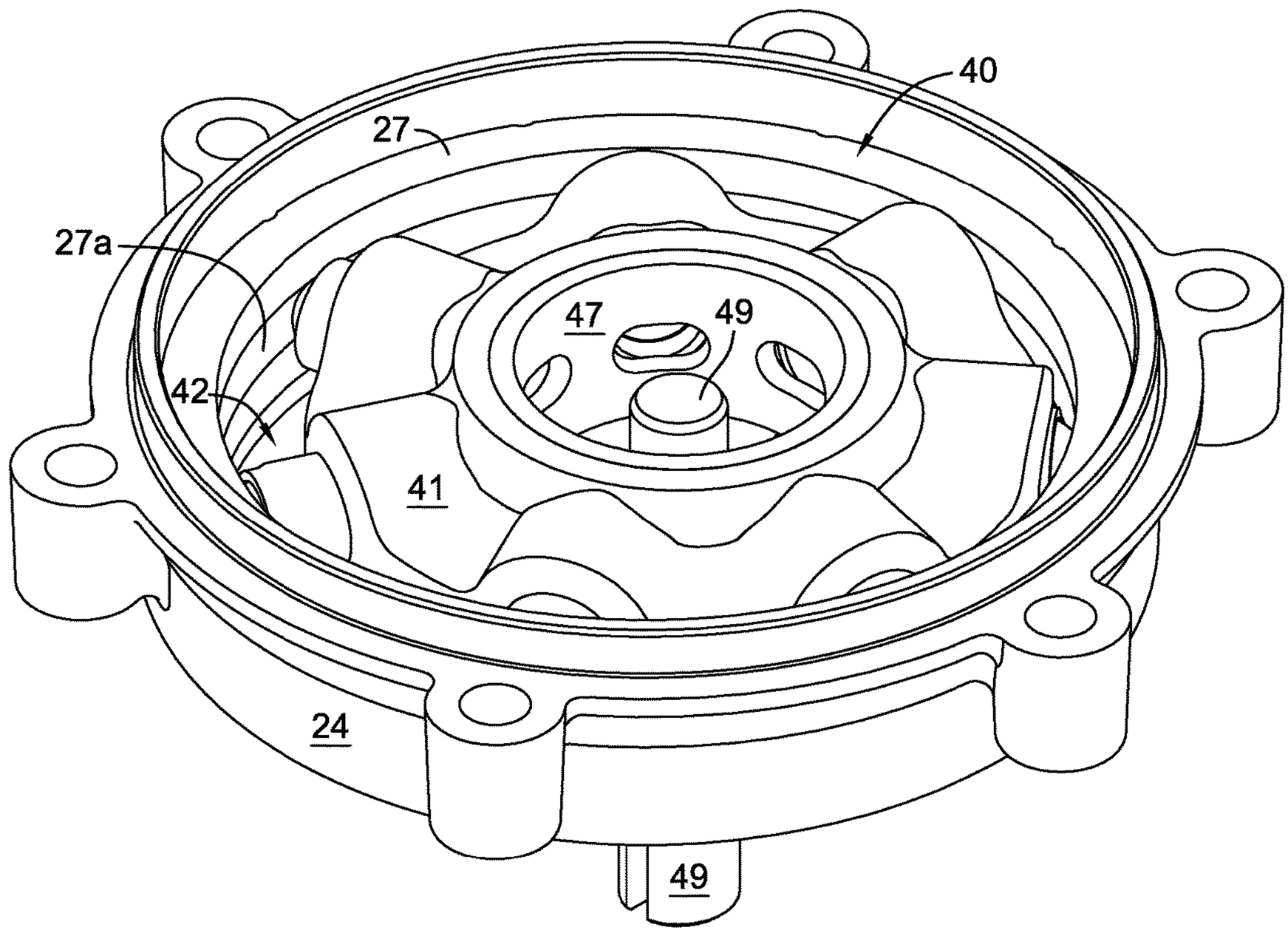


FIG. 7

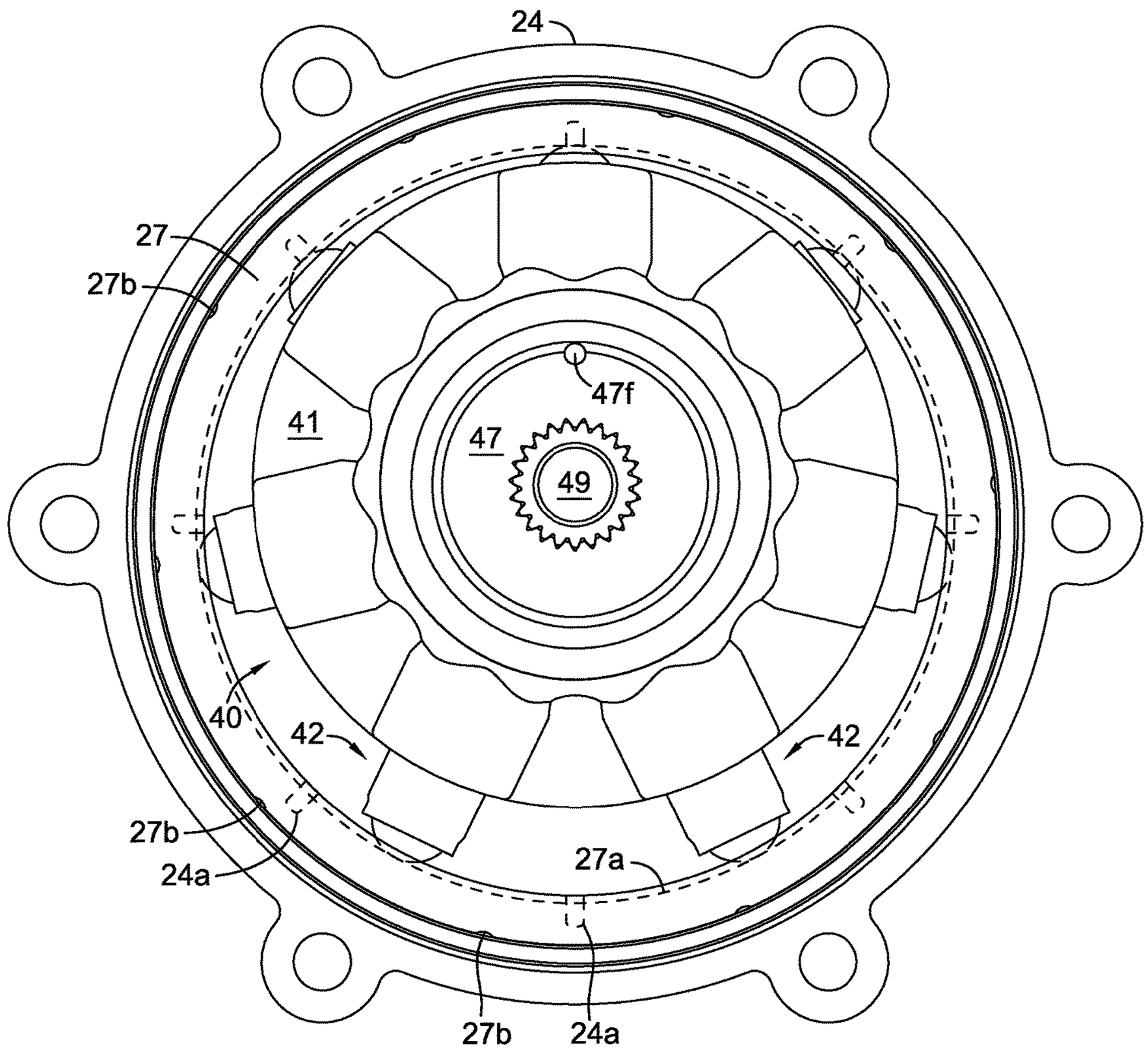


FIG. 8

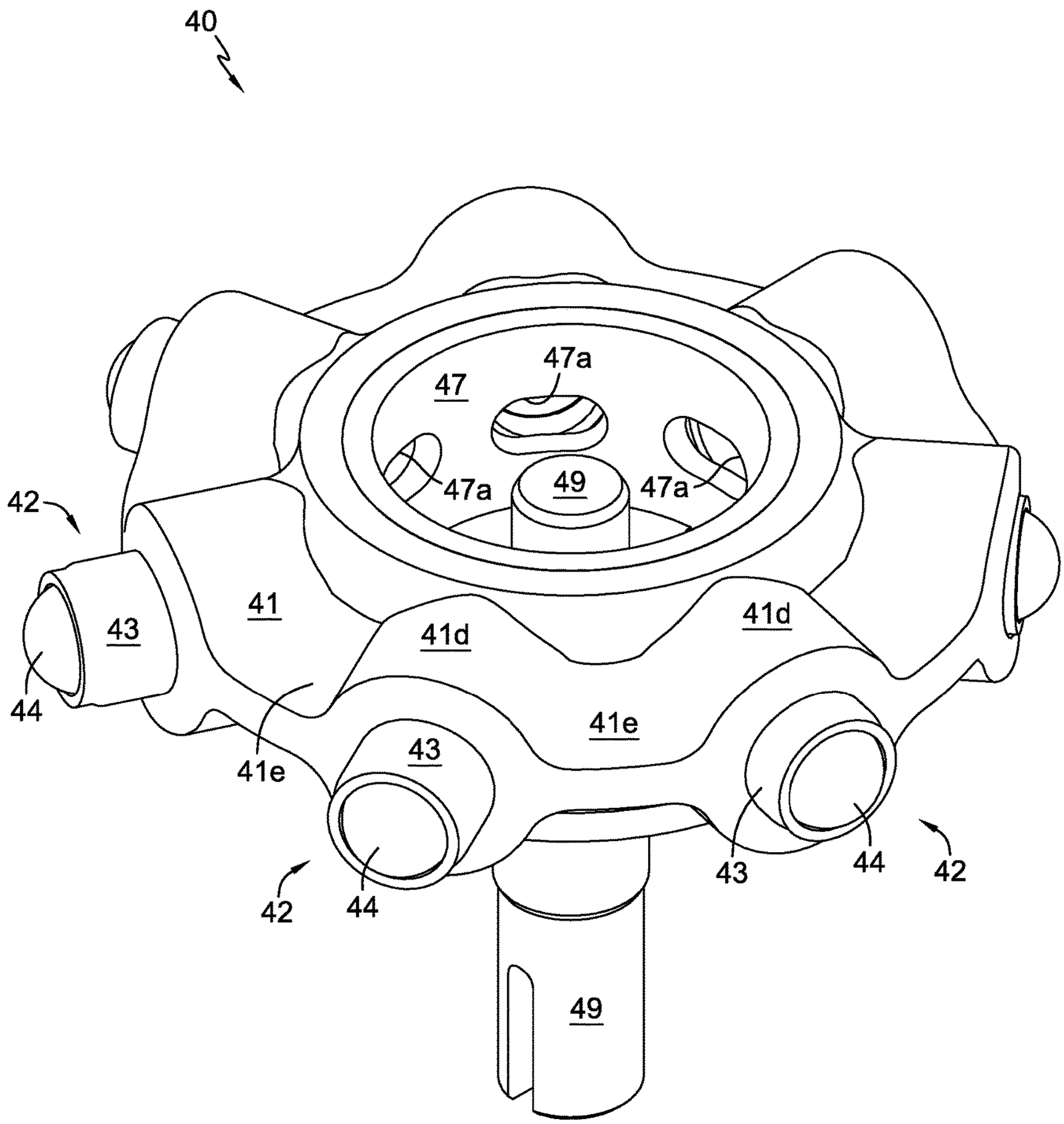


FIG. 9

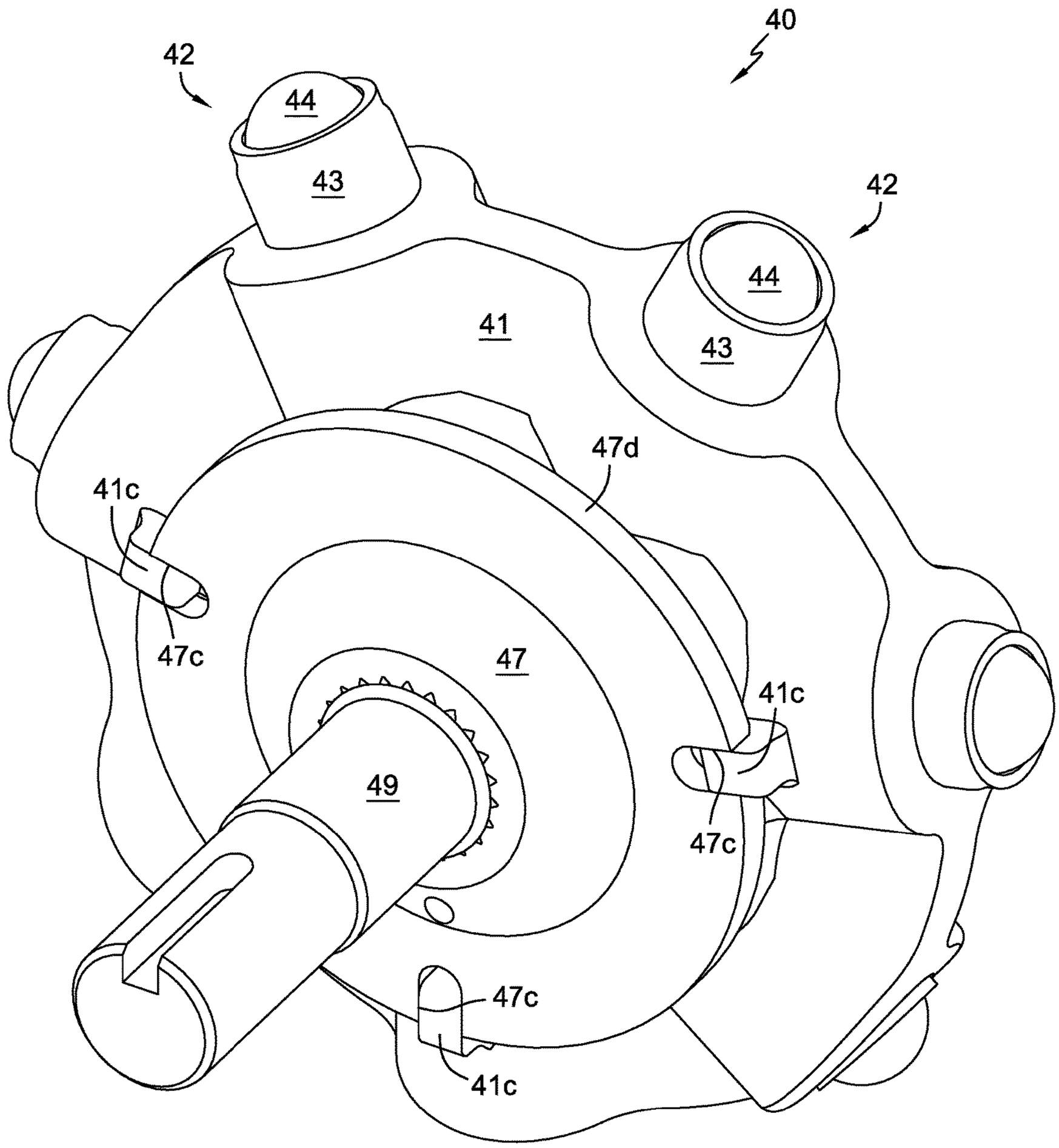


FIG. 10

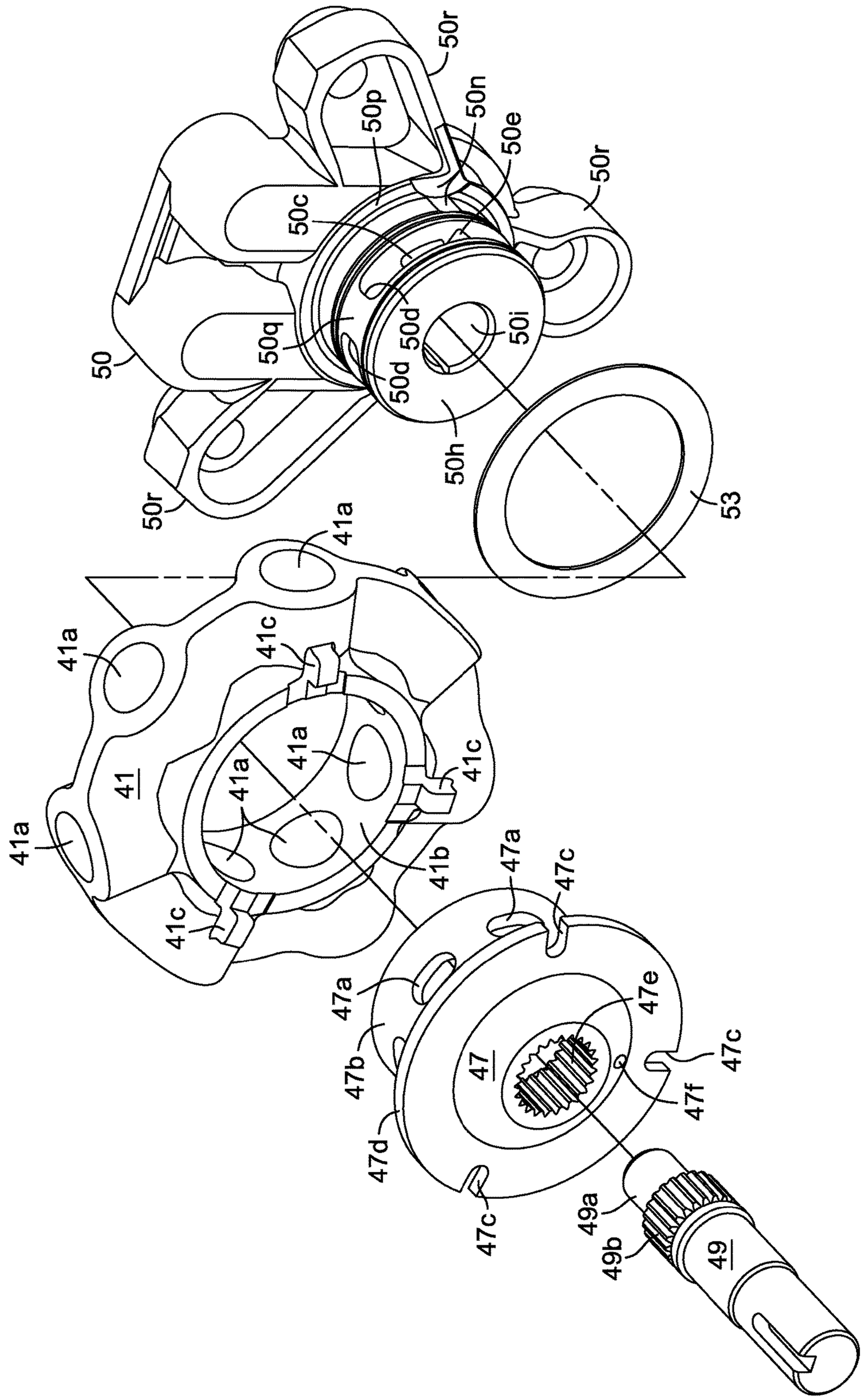
50
50r
50p
50n
50e
50r
50c
50q
50d
50d
50i
50h
53
41a
41a
41c
41a
41a
41c
41
41a
41b
41c
47a
47c
47a
47e
47b
47
47c
47f
47d
47c
49a
49b
49

FIG. 11

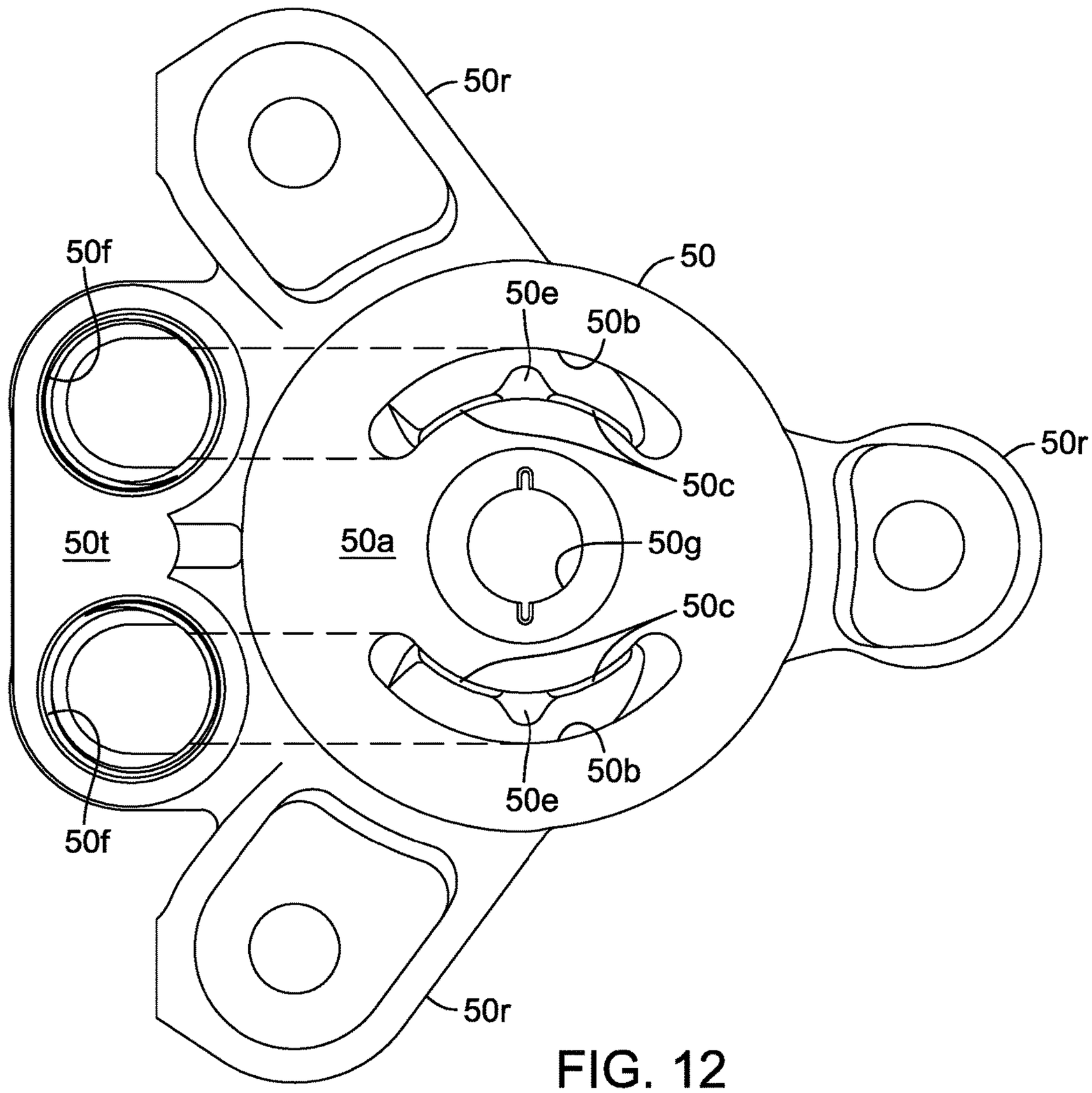
50r
50f
50
50e
50b
50r
50c
50t
50a
50g
50c
50b
50e
50f
50r

FIG. 12

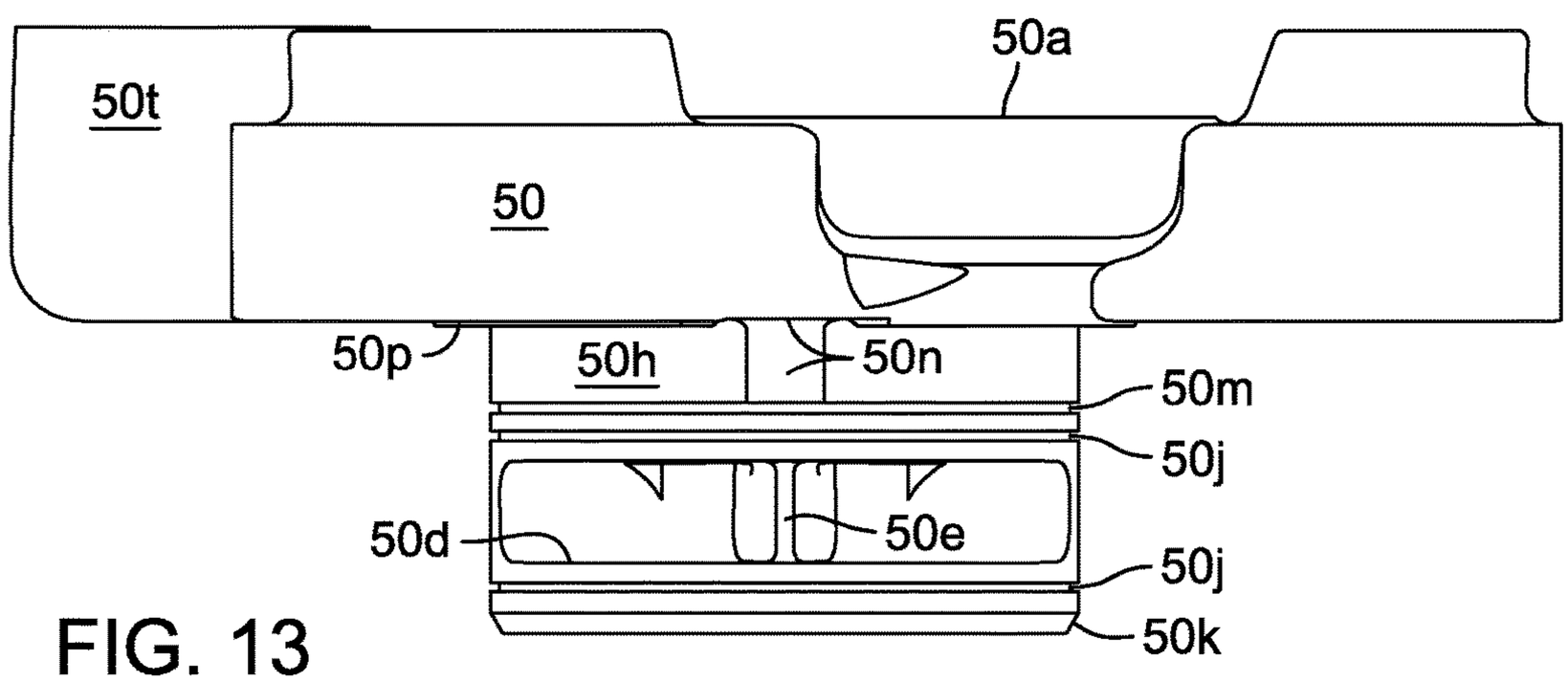
50a
50t
50
50p
50h
50n
50m
50j
50d
50e
50j
50k

FIG. 13

# TRANSMISSION ASSEMBLY

## CROSS REFERENCE

This application is a continuation of U.S. patent application Ser. No. 14/484,559, filed on Sep. 12, 2014, which claims the benefit of U.S. Provisional Patent Application 61/876,905, filed Sep. 12, 2013, which is incorporated herein in its entirety.

## BACKGROUND OF THE INVENTION

This invention relates to hydraulic pumps and motors used to transmit rotational force from a prime mover to an output. Such devices may be used in applications including but not limited to zero-turn mowers, fan drives and the like.

## SUMMARY OF THE INVENTION

This invention discloses a compact hydraulic transmission assembly using an axial piston pump disposed on a center section that also provides a cylindrical running surface for a radial piston motor. This design provides for a compact and low profile assembly, while the combination of an axial piston pump with a radial piston motor provides improved efficiency for higher torque output. The radial piston motor includes a lower mass piston block that improves performance.

A better understanding of the invention will be obtained from the following detailed descriptions and accompanying drawings, which set forth illustrative embodiments that are indicative of the various ways in which the principals of the invention may be employed.

## BRIEF DESCRIPTION OF THE DRAWINGS

FIG. **1** is a perspective view of a transmission assembly in accordance with the principles disclosed herein.

FIG. **2** is a perspective view similar to FIG. **1** with the pump housing removed.

FIG. **3** is a perspective view similar to FIG. **2** with certain internal components removed to further illustrate additional structure.

FIG. **4** is a top plan view of the internal assembly as shown in FIG. **3**.

FIG. **5** is a sectional view along the line **5-5** in FIG. **4**.

FIG. **6** is a perspective view of certain internal components of the transmission assembly.

FIG. **7** is a perspective view of the motor housing along with certain components of the transmission assembly.

FIG. **8** is a top plan view of the motor housing and certain components shown in FIG. **7**.

FIG. **9** is a top perspective view of the radial piston motor and output shaft.

FIG. **10** is a bottom perspective view of the radial piston motor and output shaft of FIG. **9**.

FIG. **11** is an exploded bottom perspective view of certain components of the transmission assembly.

FIG. **12** is a top plan view of the center section of the transmission assembly.

FIG. **13** is a side elevational view of the center section of FIG. **12**.

## DETAILED DESCRIPTION OF THE DRAWINGS

The description that follows describes, illustrates and exemplifies one or more embodiments of the invention in



accordance with its principles. This description is not provided to limit the invention to the embodiment(s) described herein, but rather to explain and teach the principles of the invention in order to enable one of ordinary skill in the art to understand these principles and, with that understanding, be able to apply them to practice not only the embodiment(s) described herein, but also any other embodiment that may come to mind in accordance with these principles. The scope of the invention is intended to cover all such embodiments that may fall within the scope of the appended claims, either literally or under the doctrine of equivalents.

It should be noted that in the description and drawings, like or substantially similar elements may be labeled with the same reference numerals. However, sometimes these elements may be labeled with differing numbers or serial numbers in cases where such labeling facilitates a more clear description. Additionally, the drawings set forth herein are not necessarily drawn to scale, and in some instances proportions may have been exaggerated to more clearly depict certain features. As stated above, this specification is intended to be taken as a whole and interpreted in accordance with the principles of the invention as taught herein and understood by one of ordinary skill in the art. The use of various fasteners depicted herein is illustrative only and it will be understood by those of skill in the art that other means of securing the components could be alternatively used.

Transmission assembly **20** comprises a first portion, or pump housing **23**, secured to a second portion, or motor housing **24**, by means of a series of fasteners **25** to form an internal sump **29** in which center section **50** is secured by a series of fasteners **51**. Center section **50** includes a plurality of mounting lobes **50***r* that extend outwardly therefrom to receive fasteners **51**. Transmission assembly **20** may be connected to an external expansion tank (not shown) by means of a port (not shown) formed on an external surface thereof.

Pump **30** comprises a rotatable cylinder block **31** disposed on a pump running surface **50***a*, and a plurality of pump pistons **32** are disposed in cylinder block **31** in a known manner. Pump input shaft **21** extends into pump housing **23** through support bearing **22** to engage and rotatably drive cylinder block **31**. Pump input shaft **21** has one end **21***a* supported in bore **50***g* formed in center section **50**. Pump **30** also comprises a thrust bearing **33** disposed in a swash plate **34**, which has a trunnion arm **35** engaged thereto to rotate swash plate **34** and control output of pump **30** in a known manner. Trunnion arm **35** extends out of pump housing **23**.

Center section **50** has fluid porting formed therein comprising fluid passages **50***c* connecting pump ports **50***b* on pump running surface **50***a* to motor ports **50***d*, described in more detail below. A cylindrical motor running surface **50***q* is formed on pintle **50***h* that extends from the bottom of center section **50**, as seen in, e.g., FIG. **11**. The motor ports **50***d* are formed on running surface **50***q* to hydraulically connect radial piston motor **40** to fluid passages **50***c* and thus to pump **30**. Ribs **50***e* provide further structural support.

As seen in FIG. **12**, the arrangement of mounting lobes **50***r* around the circumference of center section **50** in a "Y" shape provides for a particularly compact design. Check plug ports **50***f* are formed in an extension **50***t* located between the two arms of the "Y" shape formed by lobes **50***r* and act to connect fluid passages **50***c* to sump **29**. Check plugs **52** are mounted in ports **50***f* and are located on the top surface of center section **50** (i.e., the same side as the pump running surface **50***a*) to provide for a more compact unit. A

rotary bypass **60** extends out of the pump housing **23** and enables the user to open the check plugs **52** to place the unit into bypass mode.

Radial piston motor **40**, as can be seen in FIGS. **7-11**, comprises an output hub **47** that is press-fit into or otherwise mechanically engaged to a piston block **41** having a plurality of piston bores **41***a* formed therein to receive the respective pistons **42**. This mechanical engagement results in a sealed joint between hub **47** and piston block **41** to prevent leakage of hydraulic fluid through this joint.

Piston block **41** has a series of enlarged areas **41***d* formed to accept pistons **42**. Enlarged areas **41***d* are connected by thinner webs **41***e* to form an undulating profile that reduces material mass. This reduction in material mass reduces cost and provides less running inertia.

Each piston **42** comprises a piston body **43** engaged to piston spring **45** and having piston ball **44** disposed therein, where piston balls **44** engage race surface **27***a* of the piston race ring **27**, which rides in motor housing **24**. As shown in, e.g., FIGS. **4** and **6**, a plurality of lubrication grooves **27***b* may be formed in an external surface of piston race ring **27** to cooperate with lubrication grooves **24***a* formed in motor housing **24** to permit an oil film to develop between race ring **27** and motor housing **24** if it is desired to have race ring **27** rotate. One may also use a standard bearing in place of race ring **27**, and in such an embodiment standard bull nose pistons could be used.

Motor output shaft **49** is driven by motor **40** and supported in motor housing **24** by a bearing **48**, and the internal end **49***a* extends into and is supported by bore **50***i* of center section **50**. Output hub **47** has a flange portion **47***d* and cylindrical structure **47***b* extending therefrom and extending into and supported by bore **41***b* of the motor piston block **41**. Fluid openings **47***a* are formed in hub **47** to permit fluid communication between fluid passages **50***c* and piston bores **41***a* as seen in, e.g., FIG. **11**. A pressure relief passage **47***f* is provided to permit fluid discharge to sump **29** to avoid pressure buildup below hub **47**.

Flange portion **47***d* includes a plurality of slots **47***c* formed therein. Output hub **47** is aligned to piston block **41** by means of piston block tabs **41***c* engaged to slots **47***c* as shown in, e.g., FIGS. **10** and **11**. In the event of mechanical joint slippage, tabs **41***c* engaged to slots **47***c* can maintain alignment of piston block **41** with hub **47** while driving hub **47**. Splines **47***e* on hub **47** engage with splines **49***b* on output shaft **49** to transmit rotational force of motor piston block **41** to output shaft **49**.

Thrust washer **53** is disposed between motor piston block **41** and the bottom of center section **50** where it is supported by land **50***p*.

Various pressure relief structures may be machined into center section **50**. For example, as shown in FIGS. **11** and **13**, a pressure relief groove **50***n* is formed into the bottom surface of center section **50** and extends onto adjacent pintle **50***h* to intersect with low pressure groove **50***m*.

Referring to FIG. **13**, two high pressure grooves **50***j* are provided on running surface **50***q*, one above and one below the motor ports **50***d*, to create a high pressure fluid band about pintle **50***h* that causes hydrodynamic centering of radial piston motor **40** thereon. Additionally, a low pressure groove **50***m* and a low pressure chamfer **50***k* are formed, respectively, above and below the high pressure grooves **50***j* to define this high pressure fluid band and provide balance between radial piston motor **40** and pintle **50***h*. Low pressure chamfer **50***k* communicates with the aforementioned pressure relief passage **47***f*.

While specific embodiments of the invention have been described in detail, it will be appreciated by those skilled in the art that various modifications and alternatives to those details could be developed in light of the overall teachings of the disclosure. Accordingly, the particular arrangements disclosed are meant to be illustrative only and not limiting as to the scope of the invention which is to be given the full breadth of the appended claims and any equivalent thereof.

I claim:

**1**. A transmission assembly comprising:
a pump housing; and
a center section disposed in the pump housing, the center section comprising:
a running surface having a circumference;
a mounting lobe extending outwardly from the circumference and having an opening substantially perpendicular to the running surface, the mounting lobe engaged with the pump housing; and
an extension extending outwardly from the circumference and including a check plug port substantially perpendicular to the running surface.

**2**. The transmission assembly of claim **1**, wherein the mounting lobe is one of a plurality of mounting lobes engaged with the pump housing.

**3**. The transmission assembly of claim **2**, wherein the extension is disposed between two of the plurality of mounting lobes.

**4**. The transmission assembly of claim **2**, wherein the plurality of mounting lobes are offset from one another in a "Y" shape.

**5**. The transmission assembly of claim **1**, further including a check plug in the check plug port.

**6**. The transmission assembly of claim **5**, further including a bypass shaft engaged with the check plug and extending through the pump housing.

**7**. The transmission assembly of claim **1**, further including a motor housing engaged with the pump housing to form a common sump between the pump housing and the motor housing.

**8**. The transmission assembly of claim **7**, further including a motor shaft extending through the motor housing and supported by the center section.

**9**. The transmission assembly of claim **1**, wherein the center section includes a low pressure chamfer.

**10**. The transmission assembly of claim **9**, further including a radial piston motor rotatably engaged with the center section, the radial piston motor including a pressure relief passage in fluid communication with the low pressure chamfer.

**11**. A transmission assembly comprising:
a pump housing; and
a center section having a circumference, the center section further comprising:
a mounting lobe having an opening and extending radially from the circumference; and
an extension having a check port and extending radially from the circumference;
wherein the center section is secured in the pump housing via the mounting lobe and the check port is substantially parallel to the opening.

**12**. The transmission assembly of claim **11**, wherein the mounting lobe is one of a plurality of mounting lobes offset from one another in a "Y" shape and the extension is disposed between two of the plurality of mounting lobes.

**13**. The transmission assembly of claim **11**, further including a check plug in the check port and a bypass shaft engaged with the check plug and extending through the pump housing.

**14**. The transmission assembly of claim **11**, further including a motor housing engaged with the pump housing to form a common sump between the pump housing and the motor housing.

**15**. The transmission assembly of claim **14**, further including a motor shaft extending through the motor housing and supported by the center section.

**16**. The transmission assembly of claim **11**, wherein the center section includes a low pressure chamfer and further including a radial piston motor rotatably engaged with the center section, the radial piston motor including a pressure relief passage in fluid communication with the low pressure chamfer.

**17**. A center section for use in a transmission assembly, the center section comprising:

a running surface having a circumference;

an extension extending outwardly from the circumference and including a check port; and

a mounting lobe extending outwardly from the center section and having an opening substantially parallel to the check port, wherein the center section is secured in a pump housing via the mounting lobe.

**18**. The center section of claim **17**, wherein the mounting lobe is one of a plurality of mounting lobes offset from one another in a "Y" shape and the extension is disposed between two of the plurality of mounting lobes.

**19**. The center section of claim **17**, further including a motor housing engaged with the pump housing to form a common sump between the pump housing and the motor housing.

**20**. The center section of claim **19**, further including a motor shaft extending through the motor housing and supported by the center section.

* * * * *