United States Patent

[11] **3,551,620**

[72] Inventor **Jimmie N. Hoover**
2517 Cambridge St., Odessa, Tex. 79760

[21] Appl. No. **807,290**
[22] Filed **Mar. 14, 1969**
[45] Patented **Dec. 29, 1970**

[54] **FLOW, NO-FLOW DEVICE**
10 Claims, 1 Drawing Fig.

[52] **U.S. Cl.** **200/83,** 340/244
[51] **Int. Cl.** **H01h 35/40**
[50] **Field of Search** 18/16; 73/151, 239, 240; 103/25; 200/81.9; 340/244, 245; 200/83; 73/209

[56] **References Cited**

UNITED STATES PATENTS

3,276,380	10/1966	Stevenson	200/81.9X
2,892,051	6/1959	Moore	200/81.9(M)
3,104,614	9/1963	Gramenzi	103/25
3,283,094	11/1966	Lung	103/25X
3,297,843	1/1967	Hoss	200/81.9(M)

Primary Examiner—Robert K. Schaefer
Assistant Examiner—J. R. Scott
Attorney—Marcus L. Bates

ABSTRACT: A flow, no-flow device which differentiates between gas and liquid fluid flow therethrough. The device includes a movable element which cooperates with an orifice in a manner similar to a valve element and valve seat. The movable element remains in the opened position when liquid is flowing therethrough and assumes the closed position upon the occurrence of gaseous fluid flowing therethrough. A switch associated with the movable element of the device is adapted to interrupt the current flow to a motor of a pump which provides the source of fluid flow, thus obviating a "pump-off" condition in a well bore.

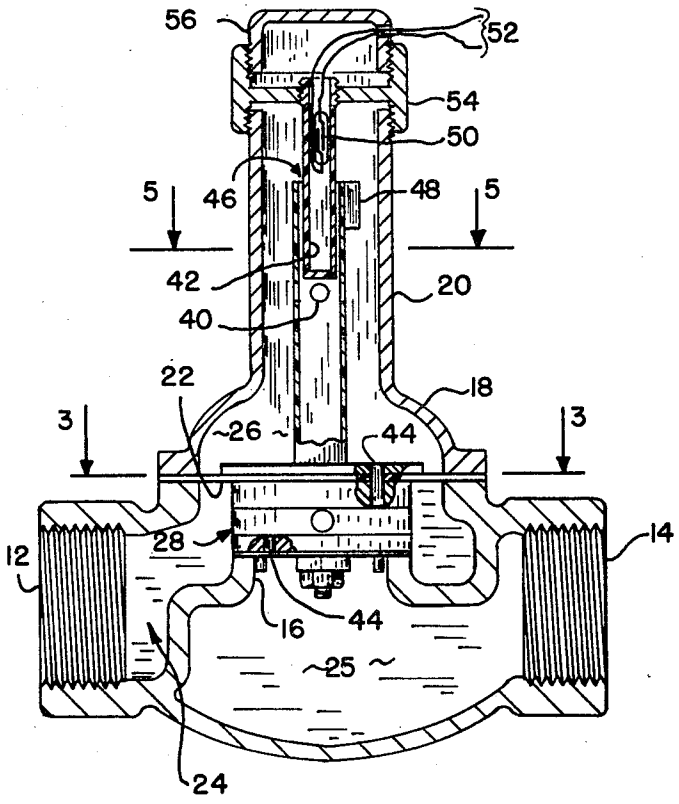

FIG. 1

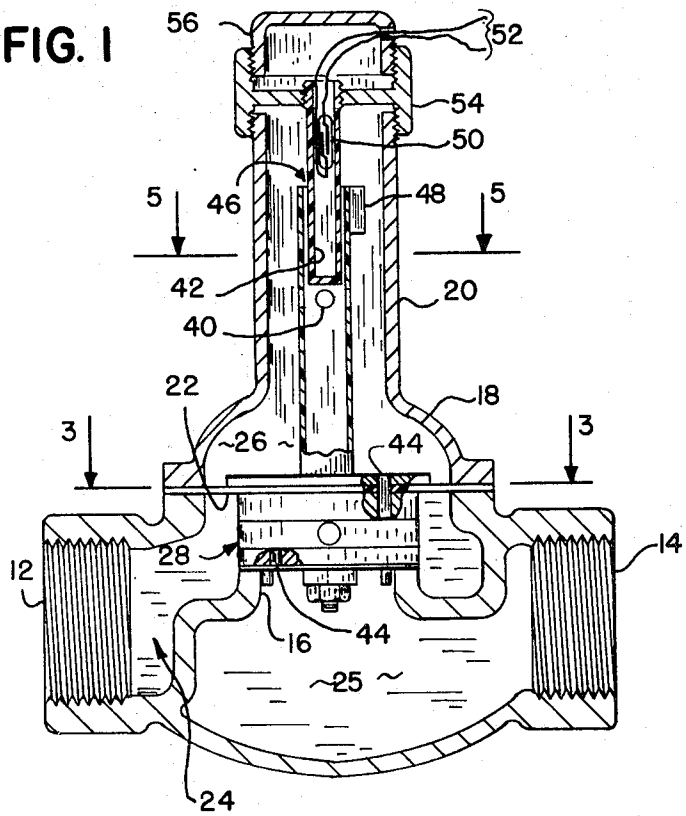

FIG. 2

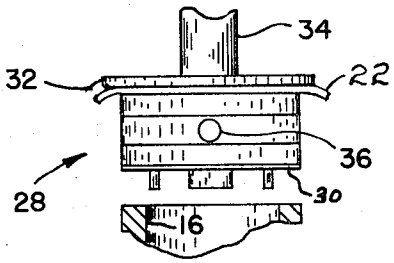

FIG. 3

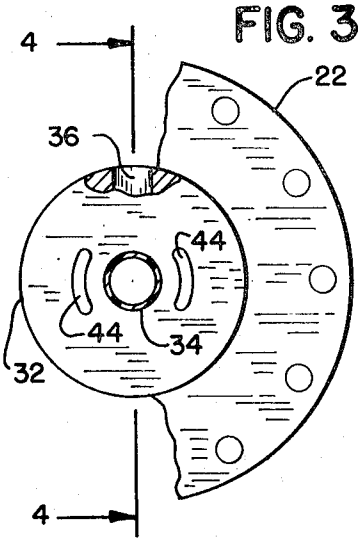

FIG. 4

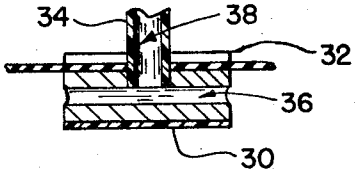

FIG. 5

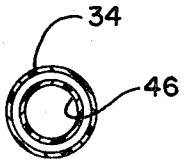

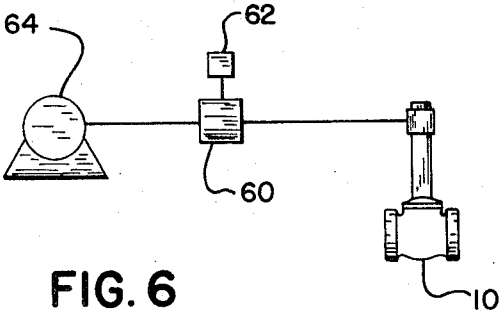

FIG. 6

INVENTOR.
JIMMIE N. HOOVER
BY
MARCUS L. BATES

FLOW, NO-FLOW DEVICE

BACKGROUND OF THE INVENTION

In the production of oil wells by artificial lift, such as a bottom hole pump which is actuated by a pump jack located above the surface of the earth, a sucker rod is attached to the pump so as to deliver reciprocatory motion from the pump jack to the downhole pump. The sucker rod is attached to the pump jack by a polish rod, and a stuffing box seals the reciprocating polish rod to the fixed free end of the production tubing. The produced crude sufficiently lubricates the seal between the packing of the stuffing box and the polish rod. The pump cyclically unloads the reservoir, causing gaseous fluid to be produced, whereupon the gas is flow conducted past the seal provided by the stuffing box. This action causes rapid and excessive wear to occur between the polish rod and stuffing box because of the lack of lubrication and coolant normally provided by the produced crude. Accordingly, it is advantageous to be able to discontinue the operation of the pump jack motor upon a substantial amount of gaseous fluid being produced from the well. This discontinuance of operation is referred to as "pump-off control." Such an expedient not only minimizes wear upon the various components of the pump system, but also effects a savings in electric power.

Various mechanical and electromechanical devices have been suggested by the prior art in order to avoid continued operation of a pump jack upon the detection of a substantial flow of gaseous fluid flow. One such prior art device which has proven highly satisfactory is the apparatus described in U.S. Pat. No. 3,105,433 to Johnson.

Another form of the prior art devices which provides a pump-off control relates to measuring the tension on the sucker rod in order to ascertain the static head of produced fluid within the production tubing as described in U.S. Pat. No. 3,359,791 to Pantages. As evidenced by these and other known forms of the prior art devices directed to flow, no-flow of liquid from an oil well, a substantial amount of circuitry and apparatus of a complicated nature is generally required.

SUMMARY OF THE INVENTION

The present invention provides a pump-off control means for effectively discriminating between gaseous and liquid fluid flow by providing a flow, no-flow apparatus having a main housing within which there is operatively positioned a flow responsive or movable element which together with the housing forms an upper and a lower chamber. An equalizer line connected between each of the chambers forms a stand pipe. A passageway in the form of a gas orifice is provided within the flow responsive element for equalizing the pressure between the two chambers when gas if flowing. A switch means adapted to be moved in response to movement of the movable element provides a control for interrupting current flow to the motor which actuates a downhole pump. Flow of produced liquid through the inlet and to the lower chamber provides a hydrostatic head in the equalizer line which is effected as an upwardly directed force on the movable element to thereby lift the element from the orifice. This action maintains the switch in the closed or current-flowing condition. When the reservoir produces a substantial quantity of gas rather than liquid or a liquid/gas mixture, the gaseous flow into the housing causes the liquid level in the equalizer line to be lowered and the gas to flow into the upper chamber and through the flow control element, thereby equalizing the pressure between the two chambers. This action causes the biased movable element to be seated against the orifice thereby moving the switch to the opened position so as to interrupt current flow to the downhole pump motor whereupon no further pumping action is possible until the pump is again energized.

It is therefore a primary object of the present invention to provide a flow, no-flow device which produces a signal when liquid or a mixture of liquid and gases is flowing through a conduit.

A further object of the invention is to provide an improved flow, no-flow device which actuates a flow control means when liquid is flowing through a conduit, and which deenergizes the flow control means when gas is flowing through the conduit.

A still further object of the present invention is to provide an improved flow, no-flow device which prevents a pump-off condition from occurring in an oil well.

Another object of the present invention is to provide a flow, no-flow device having a movable element therein responsive to a hydrostatic head within structure related to the movable element.

These and other objects are attained in accordance with the present invention by the provision of a flow, no-flow device fabricated essentially as set forth in the above abstract and summary. Other objects will occur to those skilled in the art upon digesting the remainder of the disclosure.

BRIEF DESCRIPTION OF THE DRAWINGS

FIG. 1 is a cross-sectional view taken longitudinally through a flow, no-flow device with some parts purposely left unsectioned so as to better illustrate the details of the invention;

FIG. 2 is a fragmentary view showing the control device of FIG. 1 in the opened position;

FIG. 3 is a fragmentary partly cross-sectional view of part of the device seen in FIGS. 1 and 2 as seen along line 3–3 of FIG. 1;

FIG. 4 is a fragmentary cross-sectional view taken along line 4–4 of FIG. 3;

FIG. 5 is a partly cross-sectional view taken along line 5–5 of FIG. 1; and

FIG. 6 is a schematical representation illustrating a contemplated use of the invention.

DESCRIPTION OF THE PREFERRED EMBODIMENT

There is disclosed in FIG. 1, in conjunction with the remaining FIGS., a flow, no-flow device made in accordance with the present invention. The device includes a main housing within which is disposed an inlet **12**, an outlet **14**, and with an orifice **16** interposed between the inlet and outlet. An upper portion **18** of the housing is suitably attached, as by the illustrated flange ring and bolt circle, to the lower portion of the housing. Upwardly depending from the upper portion of the housing is a stand pipe housing **20**. A flexible diaphragm **22** is interposed between the flange faces of the upper and lower housing members and divides the interior of the main housing into an inlet chamber **24**, an outlet chamber **25**, and an upper chamber **26**. A movable element **28** has a lower face **30** which is preferably a resilient seal material that enables the movable element to cooperate with the upwardly depending edge portion of the before-mentioned orifice. A metal disc **32** is removably attached to the movable element by any suitable means in order to secure the before-mentioned diaphragm thereto.

Upwardly depending from the movable element is a stand pipe, or equalizer conduit **34**, which is concentrically arranged with respect to the before-mentioned stand pipe housing. The movable element is provided with a passageway **36** which communicates with passageway **38** formed within the tubular stand pipe. Spaced-apart from the terminal end of the upper extremity of the stand pipe are a series of radially spaced-apart ports or apertures **40** which communicate the interior of the stand pipe with the interior of the stand pipe housing.

An isolated reed switch housing **46** is supportingly attached to the stand pipe housing and telescopingly received in a slidable manner within the stand pipe itself.

The movable element is further provided with a multiplicity of vertically disposed passageways **44** which communicate the upper chamber with the outlet chamber regardless of the position of the movable element.

The annulus at **46** can be made of close tolerance if desired, however, such an expedient is not deemed necessary unless the stand pipe outlet holes are located in a manner whereby

they become covered by the lower terminal end of the isolated reed switch housing. A permanent magnet **48** is adjustably attached in a rigid manner to the marginal end portion of the stand pipe and aligned within close proximity to an encapsulated reed switch **50** with the reed switch preferably being attached to the inside peripheral wall surface **42**. Wires **52** are electrically connected to the reed switch. Adapter **54** enables the reed switch to be readily removed from the stand pipe housing, while cap **56** protects the upper extremity of the device from environmental elements.

In operation the flow device can be used in a number of different applications, as for example to actuate a solenoid actuated control valve; however, it is preferred to explain the details of the operation in conjunction with a downhole pump wherein the downhole pump has a controller which cyclically actuates an electric motor which in turn provides the power to drive the downhole pump. The switch of the instant invention is preferably connected to the motor controller in a manner whereby after the pump motor has been started by the controller, and after a suitable time delay in order to permit the movable element of the flow, no-flow device to assume the open position, subsequent actuation of the reed switch to the open position will interrupt current flow and accordingly discontinue operation of the pump motor.

It should be understood that other switching arrangements than as shown and described herein are contemplated. For example, a pneumatically controlled circuitry device can be substituted for the magnet and reed switch and such a modification is considered to still fall within the comprehension of the present invention. Furthermore, incorporation of the various mechanical linkages which actuate switches, such as a mercury switch or a mechanical switch, is also considered to be within the comprehension of this invention.

In operation, and assuming the timer to have started fluid flow from the production zone of an oil well, gas will initially flow along the following flow path: inlet **12**, chamber **24**, port **36**, passageway **38**, port **40**, into chamber **26**, through passageways **44** located in the movable element, into chambers **25**, and through outlet **14**. This action fails to actuate or lift the movable element from the orifice since no hydrostatic head is present in the stand pipe. However, as liquid flows into inlet **12** and enters passageways **36**, **38**, a hydrostatic head of liquid is formed within the hollow stand pipe where it reaches a level below the ports **40**. The area of the diaphragm considered in conjunction with the weight of the various elements attached to the diaphragm must be of a ratio to provide a resultant force which moves the movable element in an upward direction prior to liquid overflowing through ports **40**. As the hydrostatic head causes the movable element to open, the main flow path will occur through the seat provided by the orifice and hence through outlet **14**. This action enables the stand pipe to telescopingly receive the switch housing, thereby aligning the magnet with the reed switch, whereupon the contact points of the reed switch are magnetically attracted by the magnet and caused to assume the closed position. This action must occur before the timed delay period of the motor controller runs out. The reed switch is now in control of the pump and should its contact points open due to cessation of liquid flow, the current flow to the pump motor will be interrupted to thereby maintain the pump in standby condition until the next timed cycle of the controller.

Assuming the reservoir associated with the borehole should reach a pump-off condition, gas will flow into inlet **12** where it enters port **36**, where the gas will then rise within the stand pipe, travel through ports **40**, continue back through the passageway **44**, and then flow through chamber **25** and outlet **14**. This action eliminates the hydrostatic head previously present within the stand pipe and accordingly the resultant forces exerted against each side of the diaphragm is changed sufficiently to cause the valve element to move in the downward direction. This action moves the magnet away from the reed switch, causing the contacts of the reed switch to assume the opened position which in turn deenergizes the pump motor. The control device is now in the standby condition awaiting the next timed cycle of operation which will be carried out as in the before described manner.

I claim:

1. In a flow control system for discriminating between liquid and gaseous flow through a flow conduit; a flow, no-flow device adapted to be flow connected in fluid flow relationship with respect to the flow conduit, comprising:

said flow, no-flow device including means forming a main housing having an inlet, an outlet, an orifice, a movable element, and an equalizer conduit;

said movable element and said orifice being disposed within said main housing and cooperating together to form an inlet chamber, an outlet chamber, and an upper chamber, with said orifice being interposed between said inlet chamber and said outlet chamber, and with said movable element being interposed between said upper chamber and said inlet chamber;

said inlet being connected to said inlet chamber, said outlet being connected to said outlet chamber;

means associated with said movable element for enabling said movable element to be moved from a position adjacent said orifice to a position spaced-apart from said orifice;

said equalizer conduit being affixed to said movable element and having at least a portion thereof located in said upper chamber; said equalizer conduit having flow passageway means for forming a passageway from said inlet chamber, through said movable element, and into said upper chamber; said flow passageway means of said equalizer conduit adapted to form a hydrostatic head therein when a sufficient quantity of liquid flows into said inlet chamber;

means forming a flow passageway from said upper chamber, through said movable element, and to said outlet chamber for flow communicating said upper and outlet chambers together when said movable element is adjacent the orifice; and

control means connected to be actuated by said movable element for discriminating between liquid and gaseous flow through the device.

2. The improvement of claim **1** wherein said equalizer conduit is a vertically disposed stand pipe having a lower end portion rigidly affixed to said movable element, and with the lower extremity thereof being flow connected to the outlet chamber; and with the upper extremity of said stand pipe being flow connected to the upper chamber of the main housing.

3. The improvement of claim **2** wherein said control means includes:

a magnet attached to and adapted to move in conjunction with said movable element; and

a magnetically actuated switch adapted to be actuated by said magnet; whereby when said magnet is brought into close proximity of said switch, the switch is actuated to thereby provide the recited function of indicating the presence of liquid fluid flow.

4. The improvement of claim **1** wherein said control means includes:

a magnet attached to and adapted to move in conjunction with said movable element; and

a magnetically actuated switch adapted to be actuated by said magnet; whereby when said magnet is brought into close proximity of said switch, the switch is actuated to thereby provide the recited function of indicating the presence of liquid fluid flow.

5. The improvement of claim **3** wherein said fluid conduit includes the production tubing of an oil well, and further including an oil well production pump located within the well, an electric motor for actuating said pump, means forming a controller for said motor, said controller cyclically energizing said motor, means by which said switch is attached to said controller to deenergize said motor upon the well assuming a pump-off condition.

6. The improvement of claim 1 wherein said control means includes:

a magnet attached to and adapted to move in conjunction with said movable element;

a magnetically actuated switch adapted to be actuated by said magnet; whereby when said magnet is brought into close proximity of said switch, the switch is actuated to thereby provide the recited function of indicating the presence of liquid fluid flow; and

said fluid conduit includes the production tubing of an oil well, and further including an oil well production pump located within the well, an electric motor for actuating said pump, means for forming a controller for said motor, said controller cyclically energizing said motor, means by which said switch is attached to said controller to deenergize said motor upon the well assuming a pump-off condition.

7. The device claimed in claim 8 wherein said movable element includes a flexible diaphragm having the circumferentially extending edge portions thereof affixed to said main housing; said movable element having means forming a face thereon;

said orifice having an upwardly depending edge portion which forms an entrance thereinto, and which engages said face of said movable element when said movable element is moved into engagement with said orifice; and

said means forming a flow passageway from said upper chamber to said outlet chamber being in the form of vertically disposed passageways formed through said face and spaced-apart from said equalizer conduit, whereby gas flows from said inlet chamber, through said movable element, through said equalizer conduit, into said upper chamber, through said vertically disposed passageways, into said orifice, and into said outlet chamber.

8. The device of claim 7 wherein said equalizer conduit is in the form of a standpipe; said stand pipe depending from said movable element in a direction opposite from said face; whereby: liquid flows into said inlet chamber, through said movable element, and into said stand pipe to thereby provide a hydrostatic head within the stand pipe which causes said face to lift free of said orifice, whereupon the movable element is moved to the recited position spaced-apart from said orifice, and thereby permits liquid flow to occur from said inlet to said outlet.

9. The device of claim 1 wherein said orifice is in the form of a wall having an aperture therein, said movable element is in the form of a diaphragm having a plug thereon; said plug adapted to be seated against said orifice to thereby divert gaseous fluid flow from said inlet to said upper chamber and thence to said outlet chamber, and to permit liquid fluid to flow directly from a said inlet chamber to said outlet chamber when said plug is lifted from said orifice.

10. The improvement of claim 8 wherein said equalizer conduit includes a stand pipe rigidly affixed to said movable member and having a lower end portion thereof flow connected to the inlet chamber by means of drilled passageway located in said movable element, said stand pipe having means forming an overflow with said overflow being spaced-apart from said drilled passageway which enables the recited hydrostatic head to be effected within the stand pipe when liquid flows into said inlet chamber, and which enables gas to flow from said inlet chamber, through said stand pipe, into said upper chamber, through said means forming a flow passageway, through said orifice, and into said outlet chamber.