US 20180284758A1

(19) United States

(12) Patent Application Publication (10) Pub. No.: US 2018/0284758 A1

Cella et al. (43) Pub. Date: Oct. 4, 2018

(54) METHODS AND SYSTEMS FOR INDUSTRIAL INTERNET OF THINGS DATA COLLECTION FOR EQUIPMENT ANALYSIS IN AN UPSTREAM OIL AND GAS ENVIRONMENT

(71) Applicant: **StrongForce IoT Portfolio 2016, LLC**, Santa Monica, CA (US)

(72) Inventors: **Charles Howard Cella**, Pembroke, MA (US); **Gerald William Duffy, JR.**, Philadelphia, PA (US); **Jeffrey P. McGuckin**, Philadelphia, PA (US); **Mehul Desai**, Oak Brook, IL (US)

(21) Appl. No.: **15/973,309**

(22) Filed: **May 7, 2018**

**Related U.S. Application Data**

(63) Continuation-in-part of application No. PCT/US2017/031721, filed on May 9, 2017.

(60) Provisional application No. 62/333,589, filed on May 9, 2016, provisional application No. 62/350,672, filed on Jun. 15, 2016, provisional application No. 62/412,843, filed on Oct. 26, 2016, provisional application No. 62/427,141, filed on Nov. 28, 2016, provisional application No. 62/540,557, filed on Aug. 2, 2017, provisional application No. 62/562,487, filed on Sep. 24, 2017, provisional application No. 62/583,487, filed on Nov. 8, 2017.

**Publication Classification**

(51) **Int. Cl.**

| | |
|---|---|
| ***G05B 23/02*** | (2006.01) |
| ***G05B 19/418*** | (2006.01) |
| ***H04L 29/08*** | (2006.01) |

(52) **U.S. Cl.**

CPC ..... ***G05B 23/0297*** (2013.01); ***G05B 23/0221*** (2013.01); ***G05B 19/4185*** (2013.01); *G05B 2219/45129* (2013.01); ***G05B 19/41875*** (2013.01); ***H04L 67/12*** (2013.01); ***G05B 19/4183*** (2013.01)

(57) **ABSTRACT**

In embodiments of the present invention improved capabilities are described for a monitoring system for data collection in an industrial drilling environment comprising a data collector communicatively coupled to a plurality of input channels, wherein a subset of the plurality of input channels are communicatively coupled to sensors measuring operational parameters from an industrial drilling component; a data storage structured to store a plurality of collector routes and collected data that correspond to the plurality of input channels, wherein the plurality of collector routes each comprise a different data collection routine; a data acquisition circuit structured to interpret a plurality of detection values from the collected data, each of the plurality of detection values corresponding to at least one of the plurality of input channels; a data analysis circuit structured to analyze the collected data from the plurality of input channels to detect an anomalous condition associated with the industrial drilling component; and a data response circuit structured to switch one of the data collection routines from a first data collection routine to a second collection routine based on the detection of the anomalous condition.

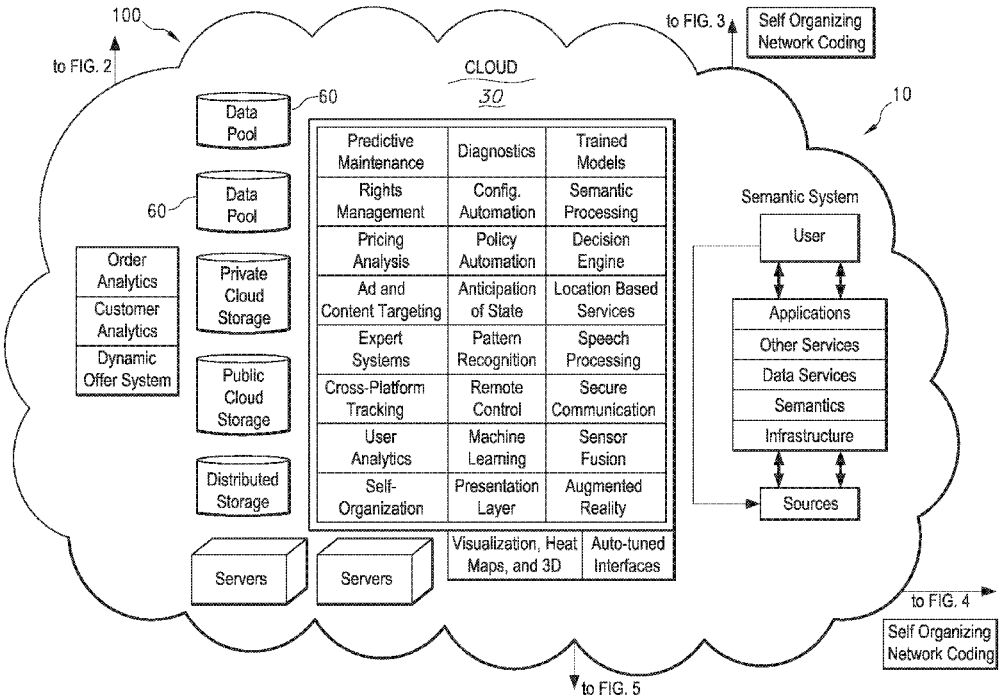

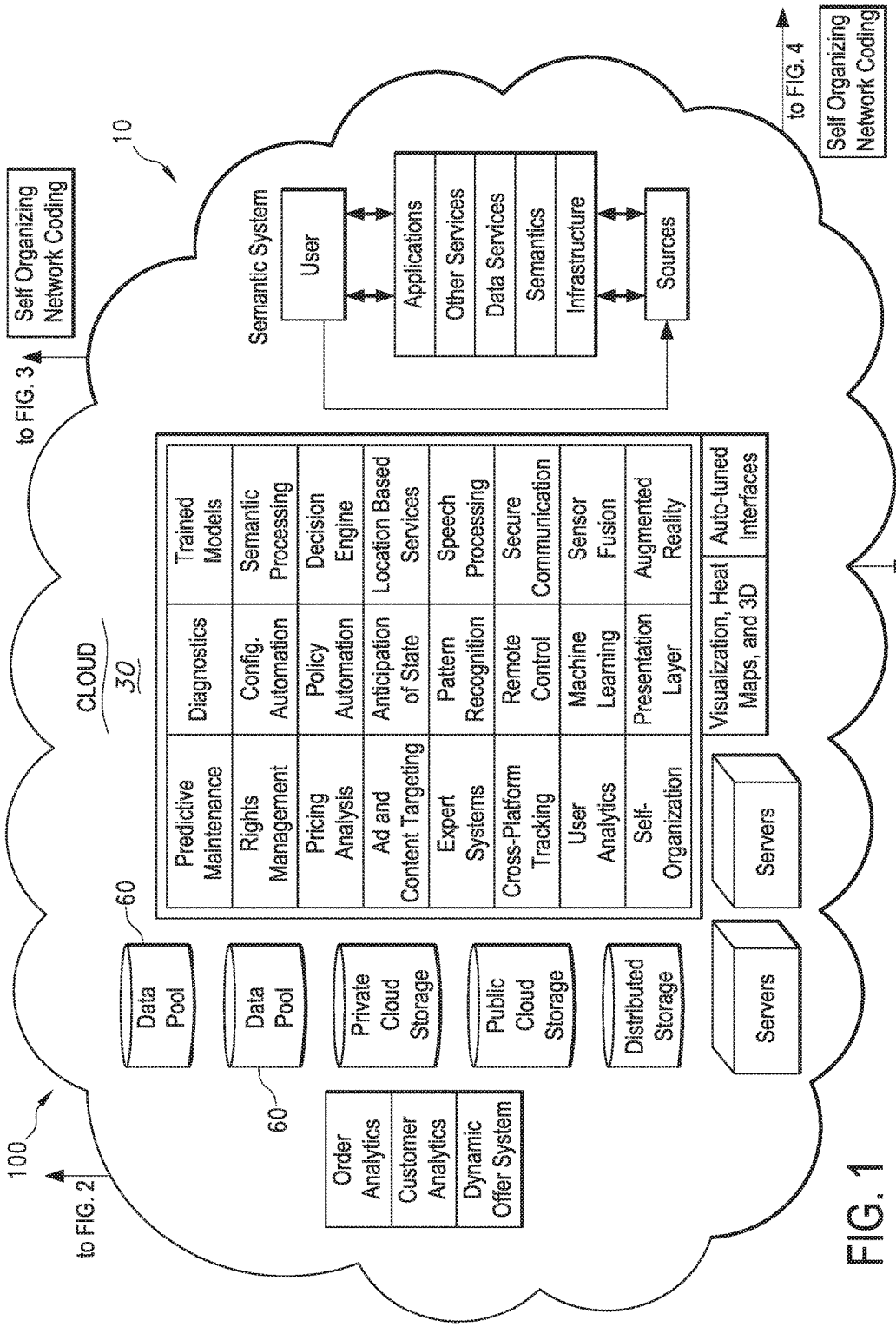
100
to FIG. 2
10
Self Organizing Network Coding
to FIG. 3
to FIG. 4
Self Organizing Network Coding
to FIG. 5
CLOUD
30
Semantic System
User
Applications
Other Services
Data Services
Semantics
Infrastructure
Sources
Predictive Maintenance
Diagnostics
Trained Models
Rights Management
Config. Automation
Semantic Processing
Pricing Analysis
Policy Automation
Decision Engine
Ad and Content Targeting
Anticipation of State
Location Based Services
Expert Systems
Pattern Recognition
Speech Processing
Cross-Platform Tracking
Remote Control
Secure Communication
User Analytics
Machine Learning
Sensor Fusion
Self-Organization
Presentation Layer
Augmented Reality
Visualization, Heat Maps, and 3D
Auto-tuned Interfaces
60
Data Pool
Data Pool
60
Private Cloud Storage
Public Cloud Storage
Distributed Storage
Servers
Servers
Order Analytics
Customer Analytics
Dynamic Offer System

FIG. 1

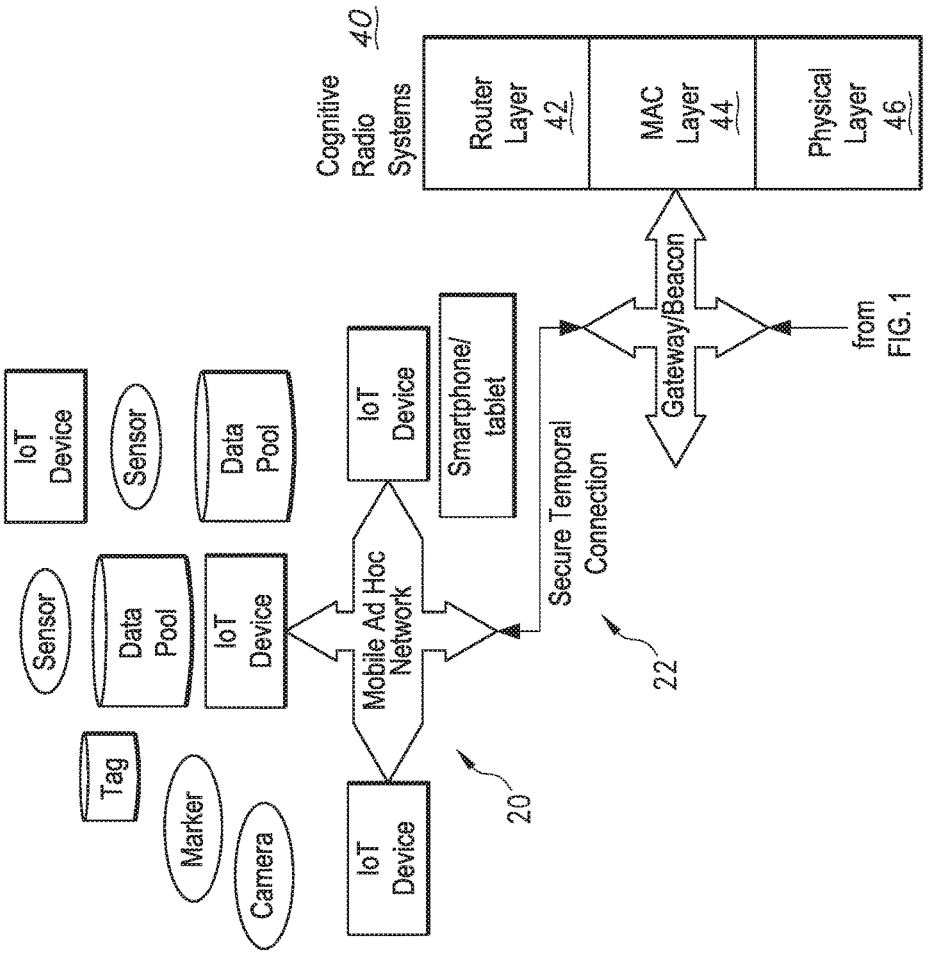
Cognitive Radio Systems
40
Router Layer 42
MAC Layer 44
Physical Layer 46
Gateway/Beacon
from FIG. 1
Secure Temporal Connection
22
Smartphone/ tablet
IoT Device
Mobile Ad Hoc Network
20
IoT Device
Sensor
Data Pool
IoT Device
Tag
Marker
Camera
IoT Device
Sensor
Data Pool

FIG. 2

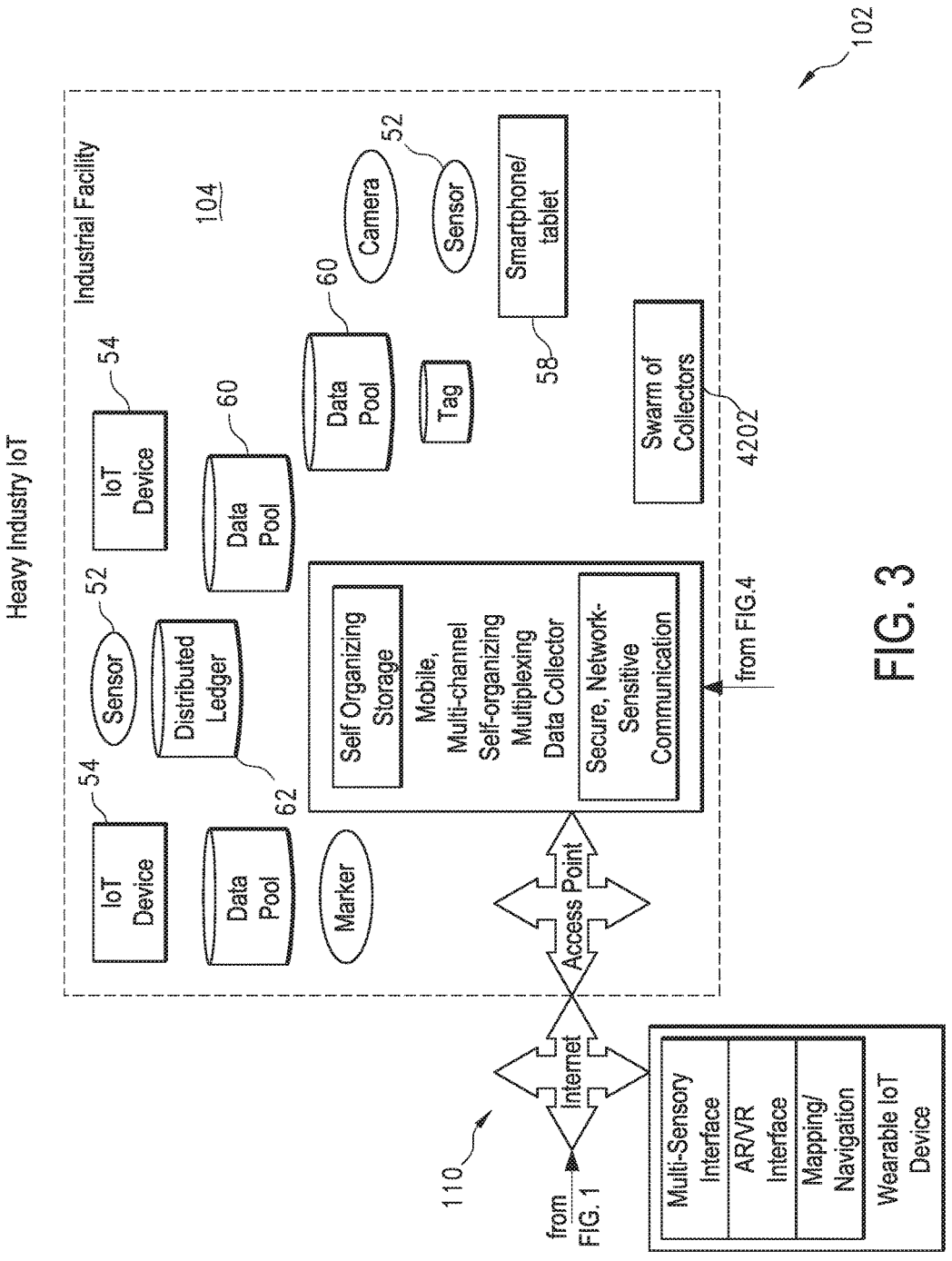
Heavy Industry IoT
Industrial Facility
104
102
IoT Device
54
Sensor
52
Distributed Ledger
62
Data Pool
60
Marker
Self Organizing Storage
Mobile, Multi-channel Self-organizing Multiplexing Data Collector
Secure, Network-Sensitive Communication
Access Point
Data Pool
60
Camera
52
Sensor
Tag
Smartphone/ tablet
58
Swarm of Collectors
4202
from FIG.4
110
Internet
from FIG. 1
Multi-Sensory Interface
AR/VR Interface
Mapping/ Navigation
Wearable IoT Device

FIG. 3

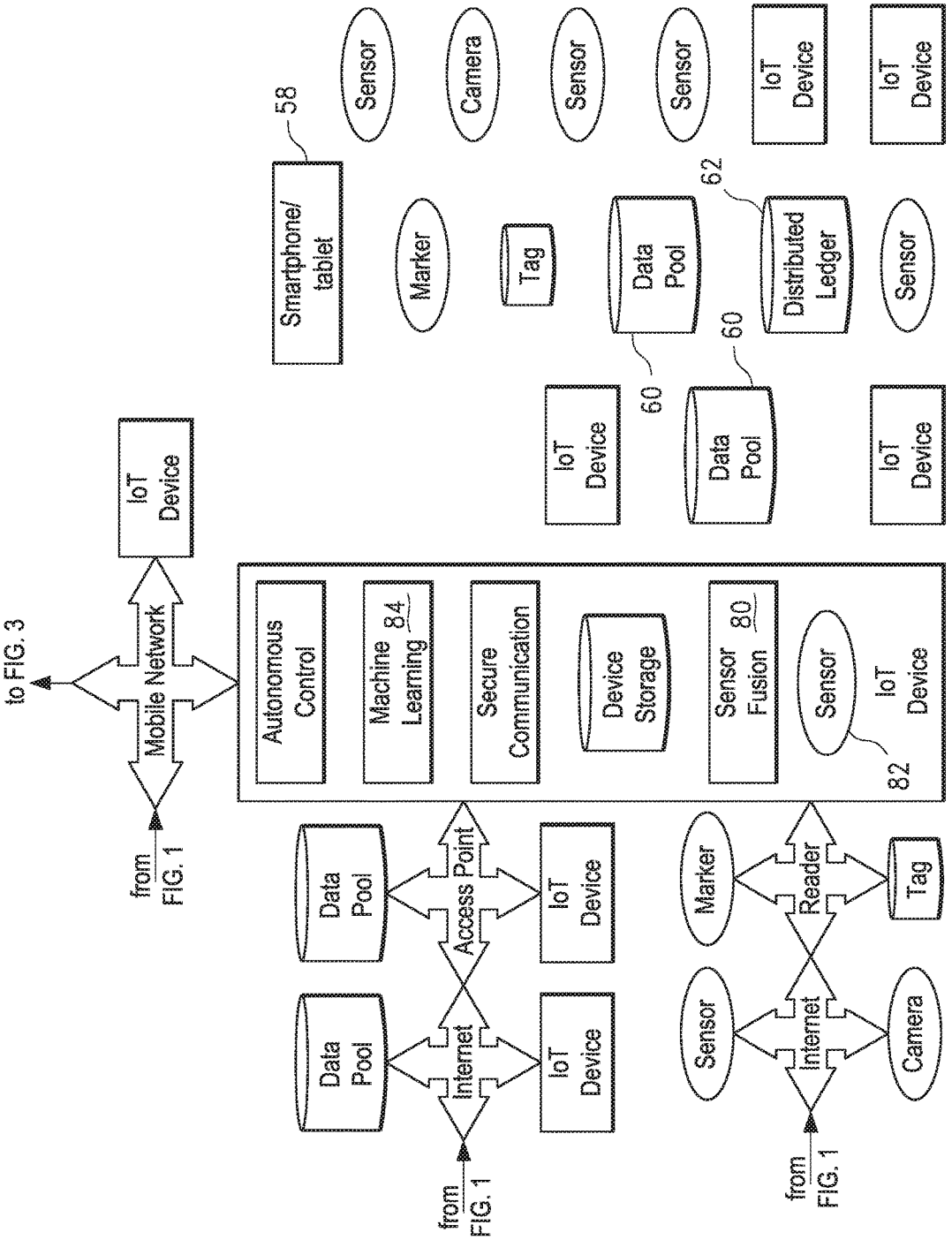
to FIG. 3
from FIG. 1
Mobile Network
IoT Device
Autonomous Control
Machine Learning
84
Secure Communication
Device Storage
Sensor Fusion
80
Sensor
IoT Device
82
58
Smartphone/ tablet
Marker
Tag
Data Pool
60
Distributed Ledger
62
Sensor
Camera
Sensor
Sensor
IoT Device
IoT Device
IoT Device
Data Pool
60
IoT Device
Data Pool
Access Point
IoT Device
Data Pool
Internet
IoT Device
from FIG. 1
Marker
Reader
Tag
Sensor
Internet
Camera
from FIG. 1

FIG. 4

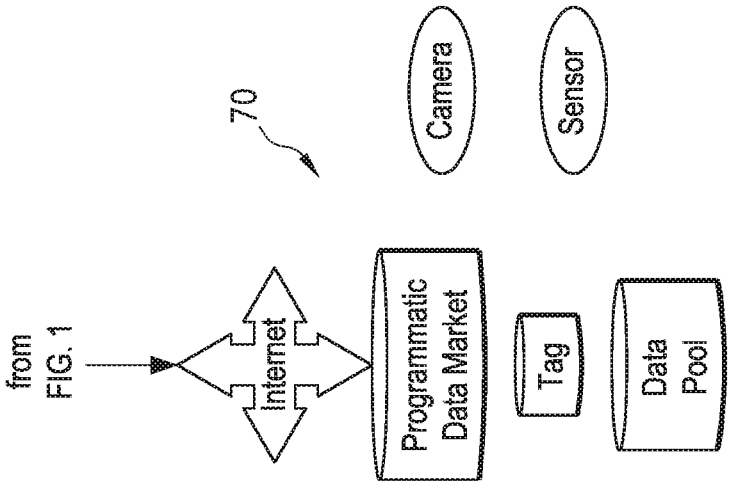
from FIG. 1
Internet
70
Programmatic Data Market
Camera
Sensor
Tag
Data Pool

FIG. 5

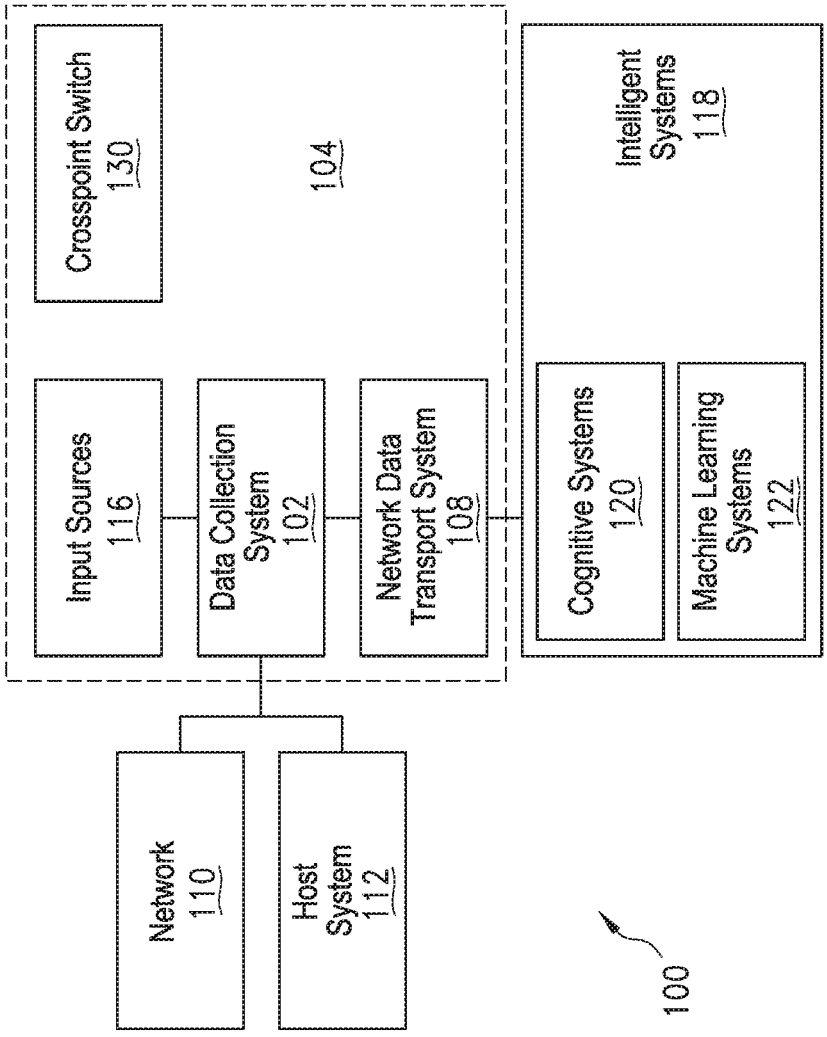
Crosspoint Switch
130
104
Input Sources
116
Data Collection
System
102
Network Data
Transport System
108
Intelligent
Systems
118
Cognitive Systems
120
Machine Learning
Systems
122
Network
110
Host
System
112
100

FIG. 6

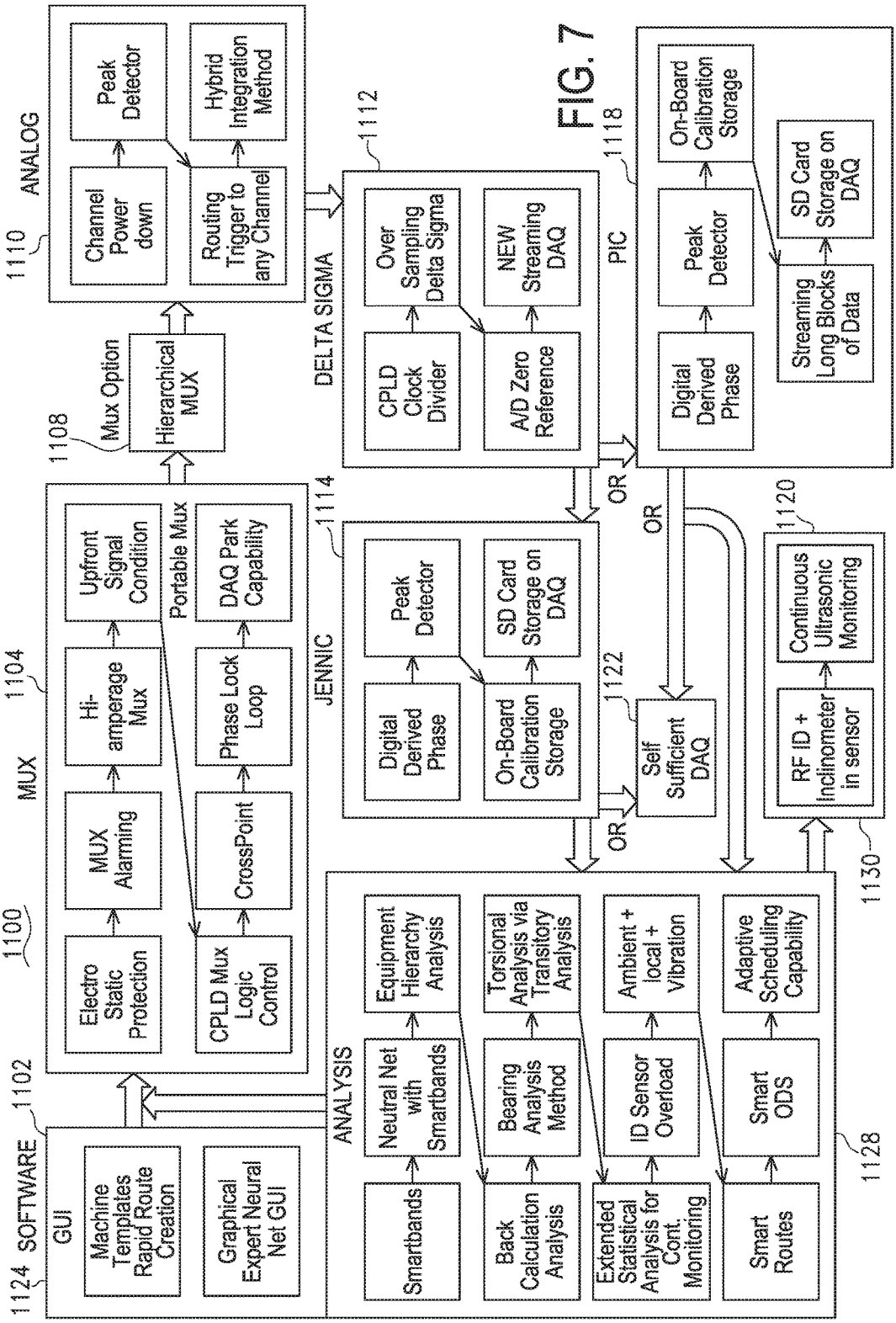
1124 SOFTWARE
GUI
Machine Templates Rapid Route Creation
Graphical Expert Neural Net GUI
1102
1100
MUX
1104
Electro Static Protection
MUX Alarming
Hi-amperage Mux
Upfront Signal Condition
CPLD Mux Logic Control
CrossPoint
Phase Lock Loop
DAQ Park Capability
Portable Mux
1108
Mux Option
Hierarchical MUX
1110 ANALOG
Channel Power down
Routing Trigger to any Channel
Peak Detector
Hybrid Integration Method
ANALYSIS
Smartbands
Neutral Net with Smartbands
Equipment Hierarchy Analysis
Back Calculation Analysis
Bearing Analysis Method
Torsional Analysis via Transitory Analysis
Extended Statistical Analysis for Cont. Monitoring
ID Sensor Overload
Ambient + local + Vibration
Smart Routes
Smart ODS
Adaptive Scheduling Capability
1128
JENNIC
1114
Digital Derived Phase
Peak Detector
On-Board Calibration Storage
SD Card Storage on DAQ
1122
Self Sufficient DAQ
OR
DELTA SIGMA
1112
CPLD Clock Divider
Over Sampling Delta Sigma
A/D Zero Reference
NEW Streaming DAQ
PIC
1118
Digital Derived Phase
Peak Detector
On-Board Calibration Storage
Streaming Long Blocks of Data
SD Card Storage on DAQ
1120
RF ID + Inclinometer in sensor
Continuous Ultrasonic Monitoring
1130

FIG. 7

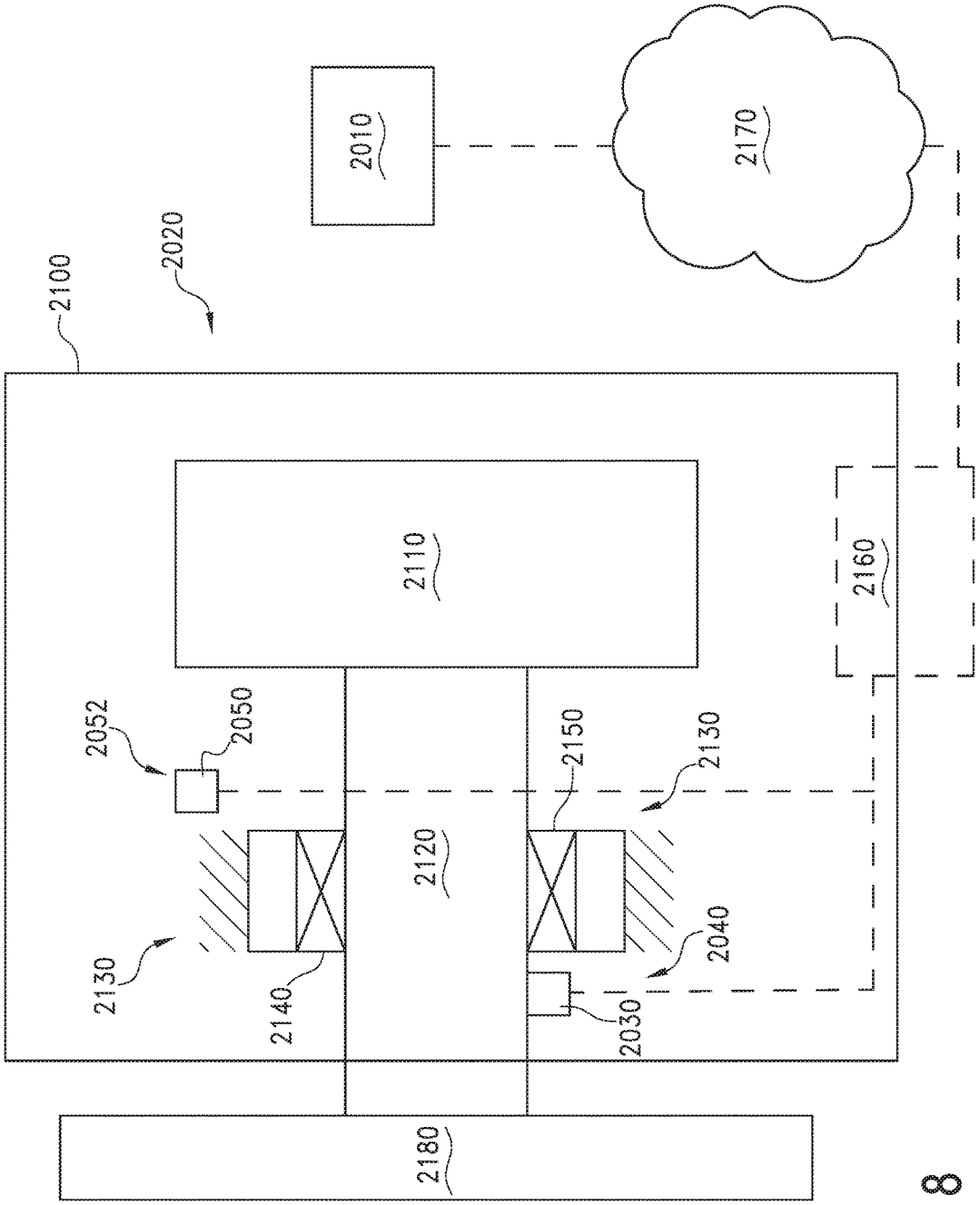
2010
2170
2020
2100
2110
2160
2052
2050
2150
2130
2120
2130
2140
2040
2030
2180

FIG. 8

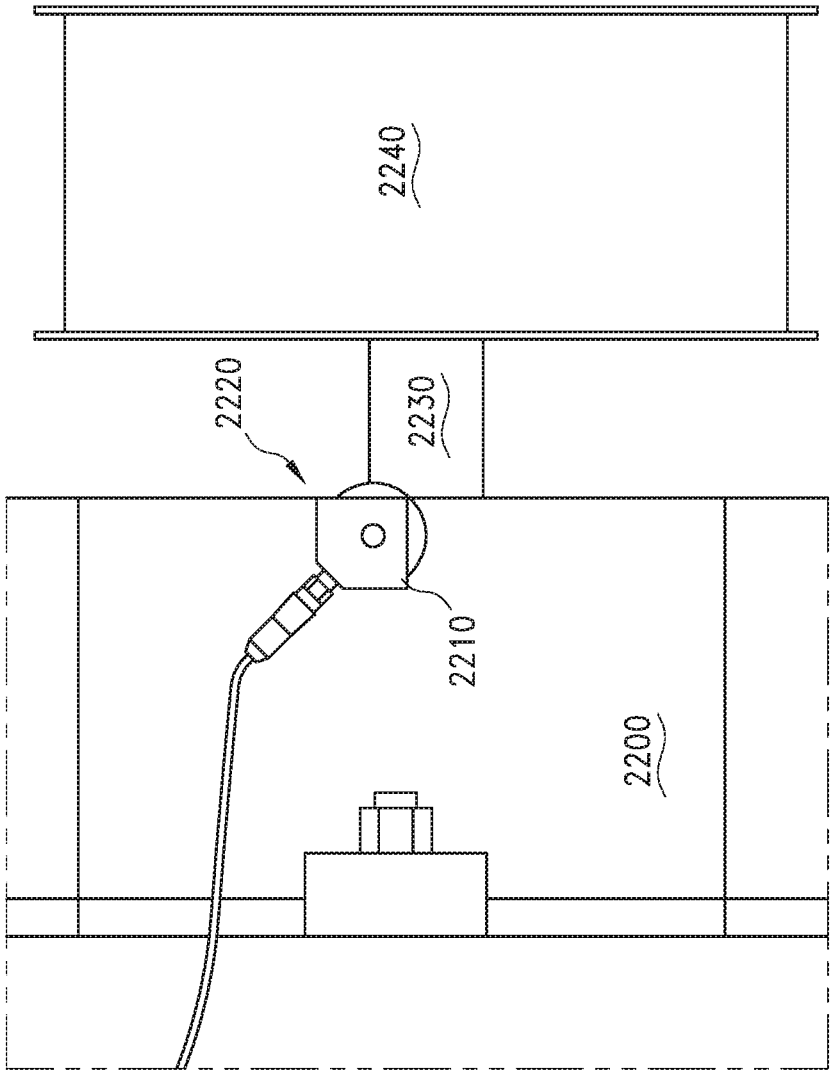


FIG. 9

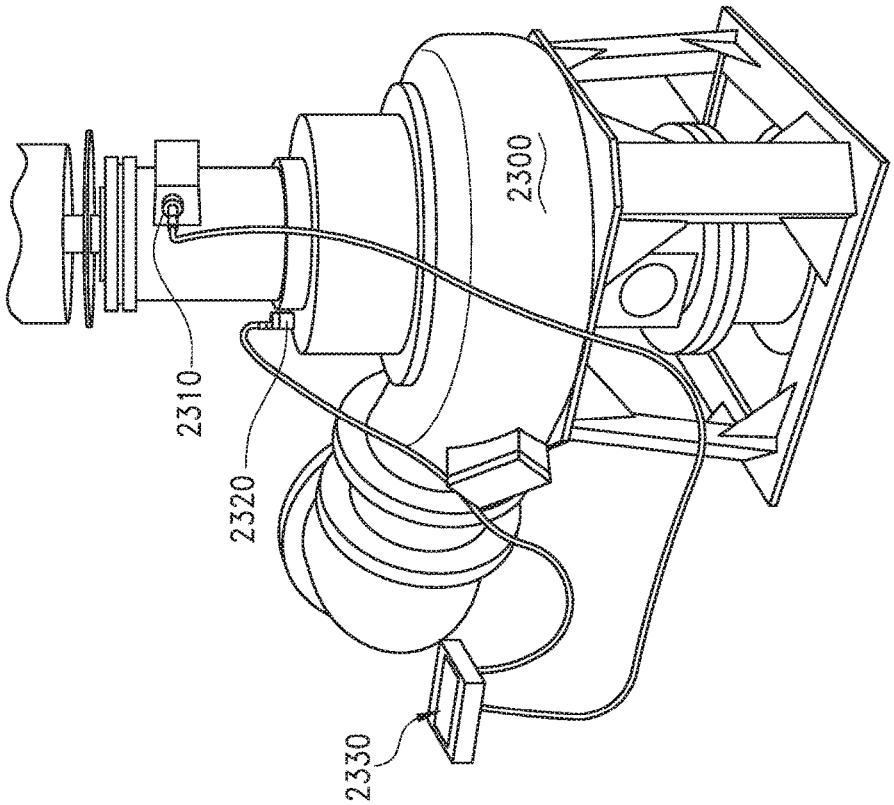


FIG. 10

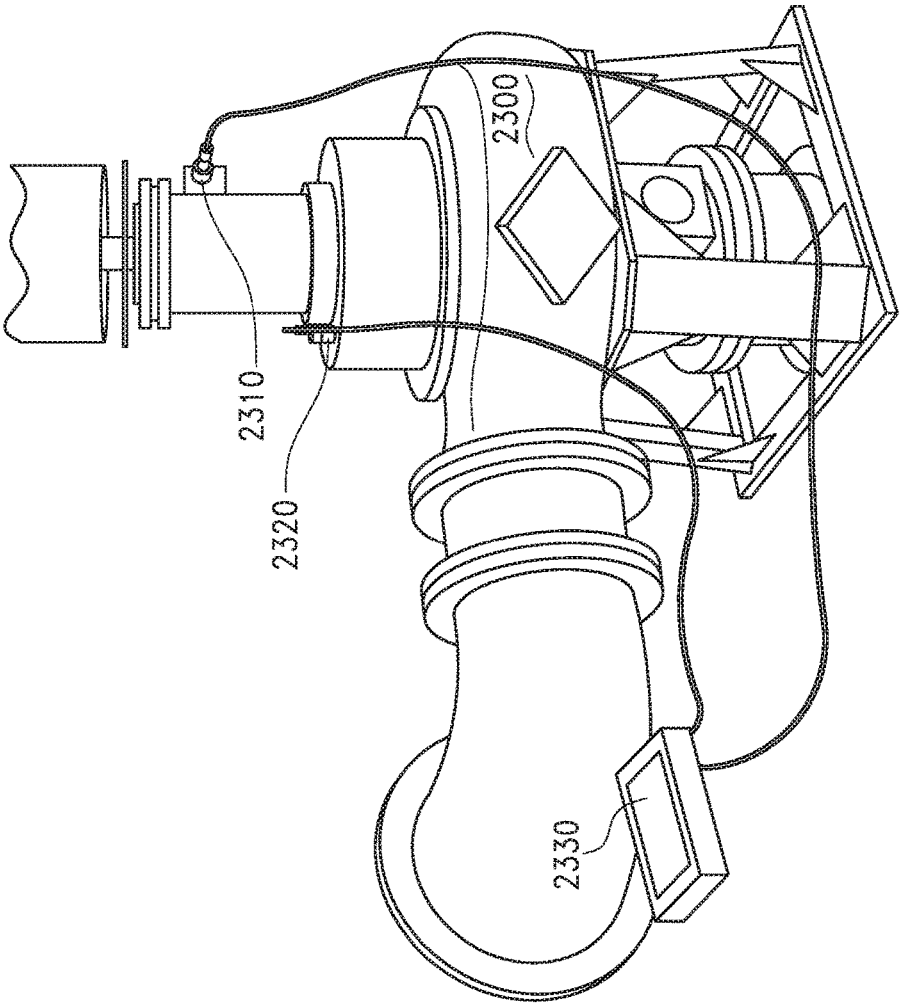


FIG. 11

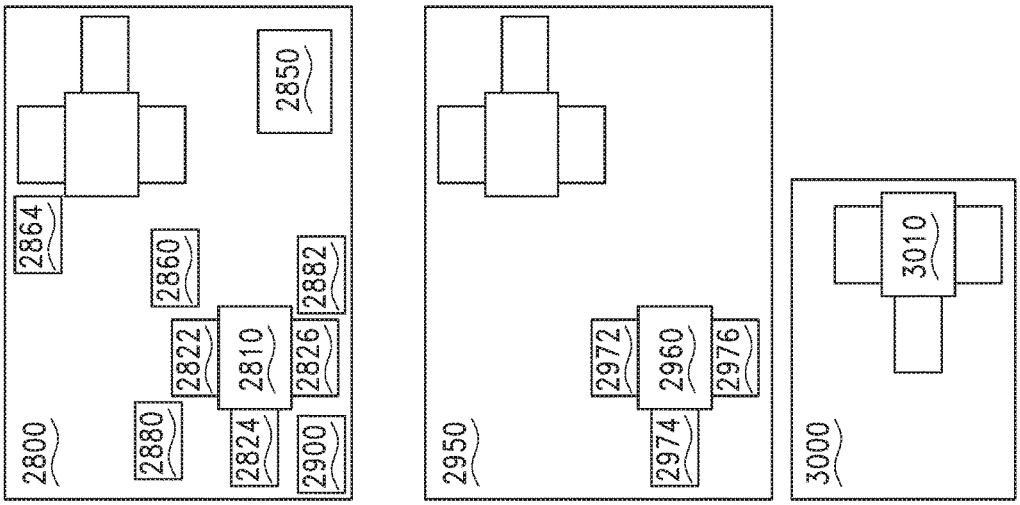
2800
2810
2822
2824
2826
2850
2860
2864
2880
2882
2900
2950
2960
2972
2974
2976
3000
3010

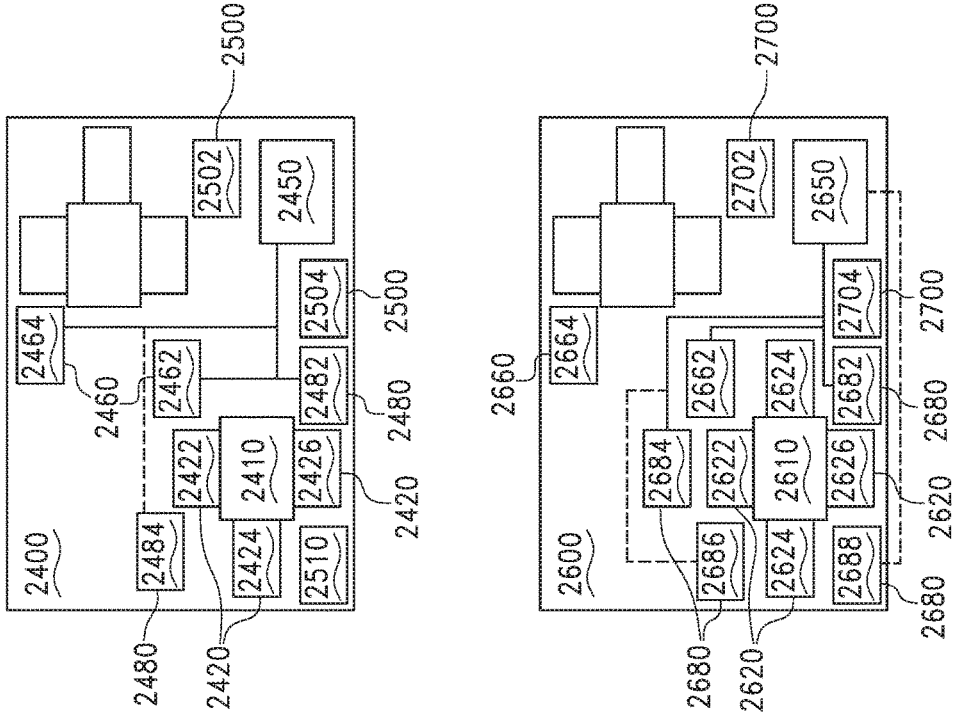
2400
2410
2420
2422
2424
2426
2450
2460
2462
2464
2480
2482
2484
2500
2502
2504
2510
2600
2610
2620
2622
2624
2626
2650
2660
2662
2664
2680
2682
2684
2686
2688
2700
2702
2704

FIG. 12

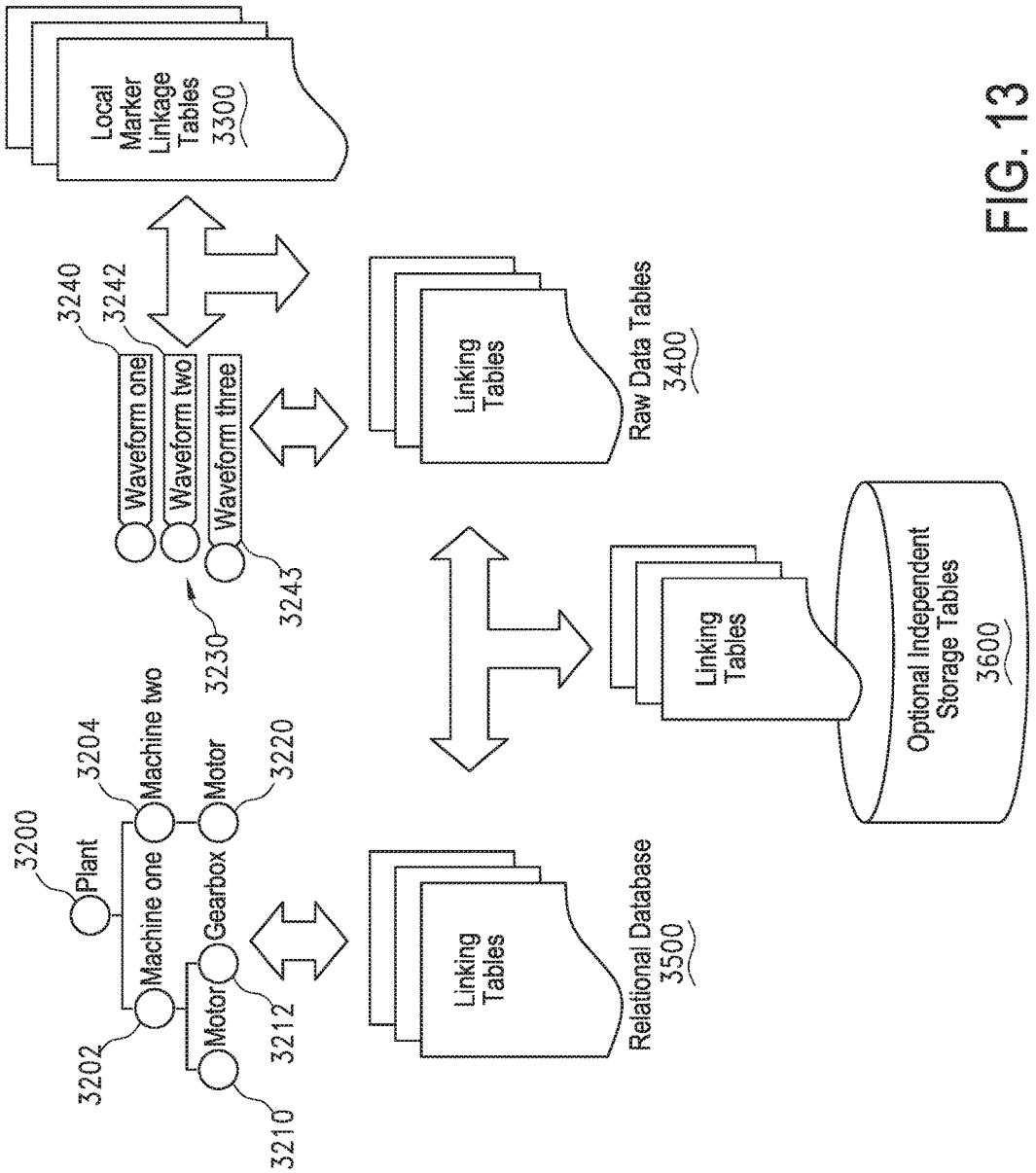
Local Marker Linkage Tables 3300
3240
3242
Waveform one
Waveform two
Waveform three
3243
3230
Linking Tables
Raw Data Tables 3400
Linking Tables
Optional Independent Storage Tables 3600
Linking Tables
Relational Database 3500
3200
Plant
Machine one
Machine two
3204
Gearbox
Motor
3220
Motor
3212
3202
3210

FIG. 13

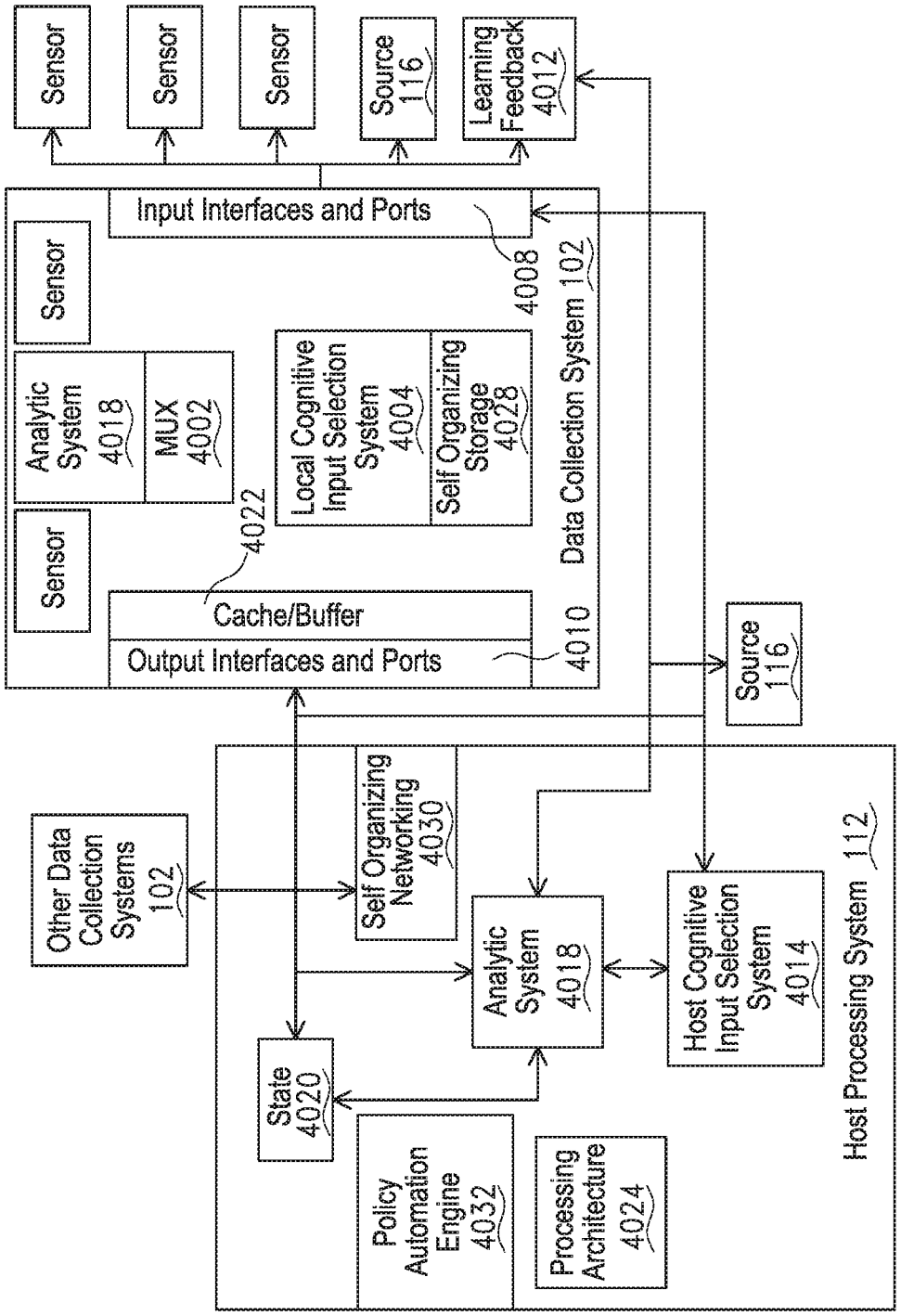
Sensor
Sensor
Sensor
Source 116
Learning Feedback 4012
Input Interfaces and Ports
4008
Sensor
Analytic System 4018
MUX 4002
Local Cognitive Input Selection System 4004
Self Organizing Storage 4028
Sensor
4022
Cache/Buffer
Output Interfaces and Ports
4010
Data Collection System 102
Source 116
Other Data Collection Systems 102
Self Organizing Networking 4030
Analytic System 4018
Host Cognitive Input Selection System 4014
State 4020
Policy Automation Engine 4032
Processing Architecture 4024
Host Processing System 112

FIG. 14

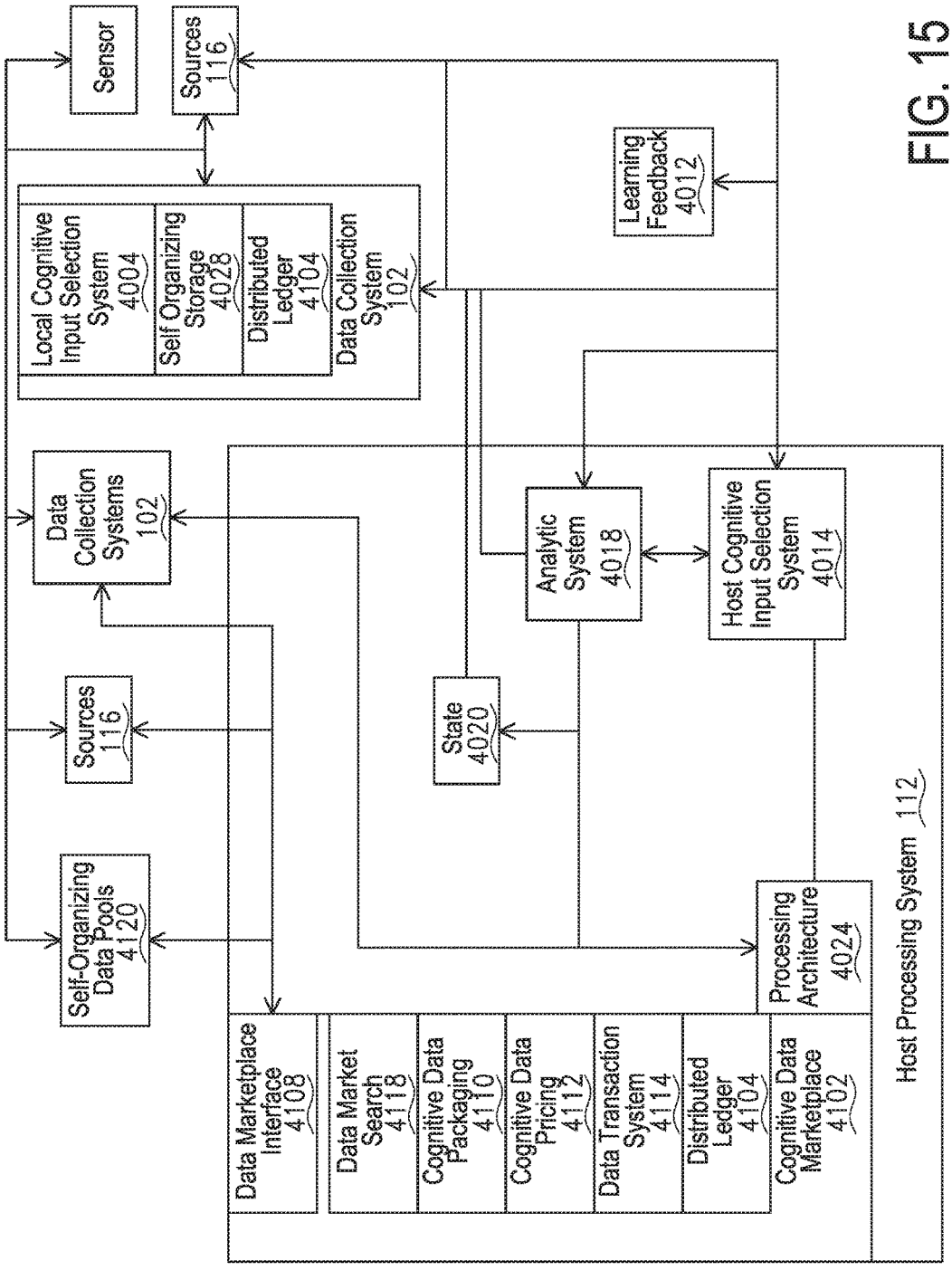
Sensor
Sources 116
Local Cognitive Input Selection System 4004
Self Organizing Storage 4028
Distributed Ledger 4104
Data Collection System 102
Learning Feedback 4012
Data Collection Systems 102
Analytic System 4018
Host Cognitive Input Selection System 4014
Sources 116
State 4020
Self-Organizing Data Pools 4120
Processing Architecture 4024
Data Marketplace Interface 4108
Data Market Search 4118
Cognitive Data Packaging 4110
Cognitive Data Pricing 4112
Data Transaction System 4114
Distributed Ledger 4104
Cognitive Data Marketplace 4102
Host Processing System 112

FIG. 15

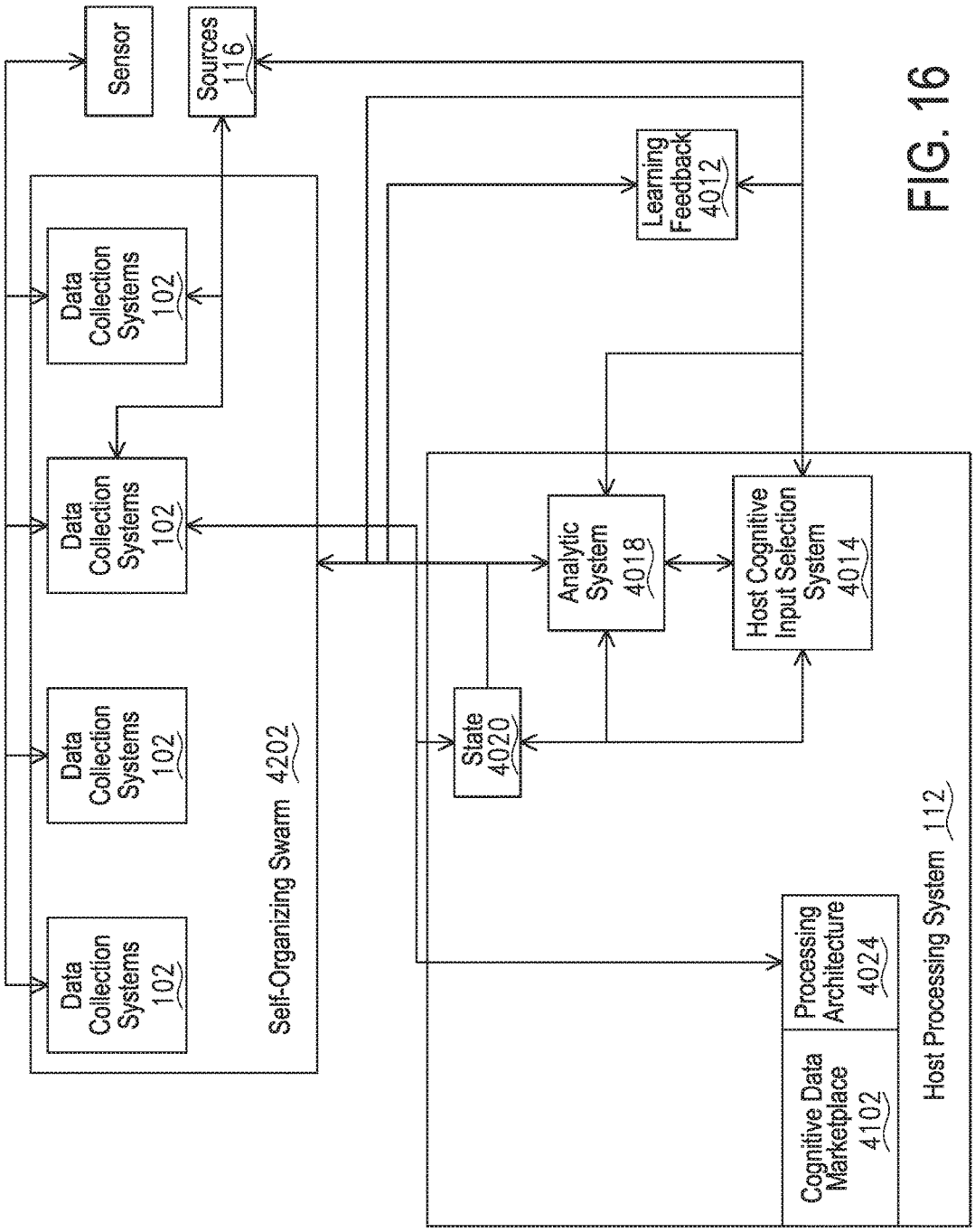
Sensor
Sources 116
Learning Feedback 4012
Data Collection Systems 102
Data Collection Systems 102
Data Collection Systems 102
Data Collection Systems 102
Analytic System 4018
Host Cognitive Input Selection System 4014
State 4020
Self-Organizing Swarm 4202
Processing Architecture 4024
Cognitive Data Marketplace 4102
Host Processing System 112

FIG. 16

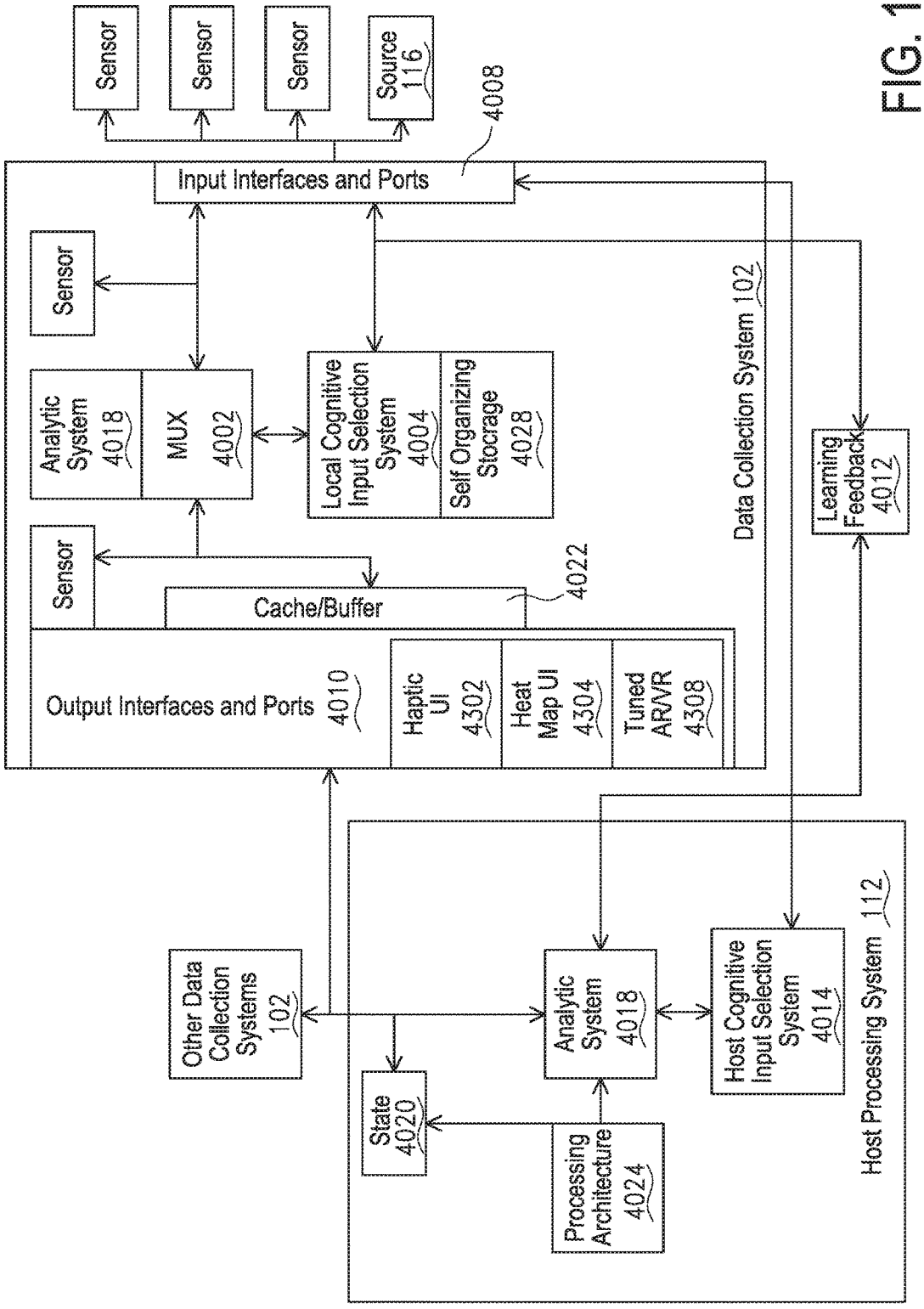
Sensor
Sensor
Sensor
Source 116
4008
Input Interfaces and Ports
Sensor
Analytic System 4018
MUX 4002
Local Cognitive Input Selection System 4004
Self Organizing Stocrage 4028
Data Collection System 102
Learning Feedback 4012
Sensor
Cache/Buffer
4022
Output Interfaces and Ports 4010
Haptic UI 4302
Heat Map UI 4304
Tuned AR/VR 4308
Other Data Collection Systems 102
Analytic System 4018
Host Cognitive Input Selection System 4014
State 4020
Processing Architecture 4024
Host Processing System 112

FIG. 17

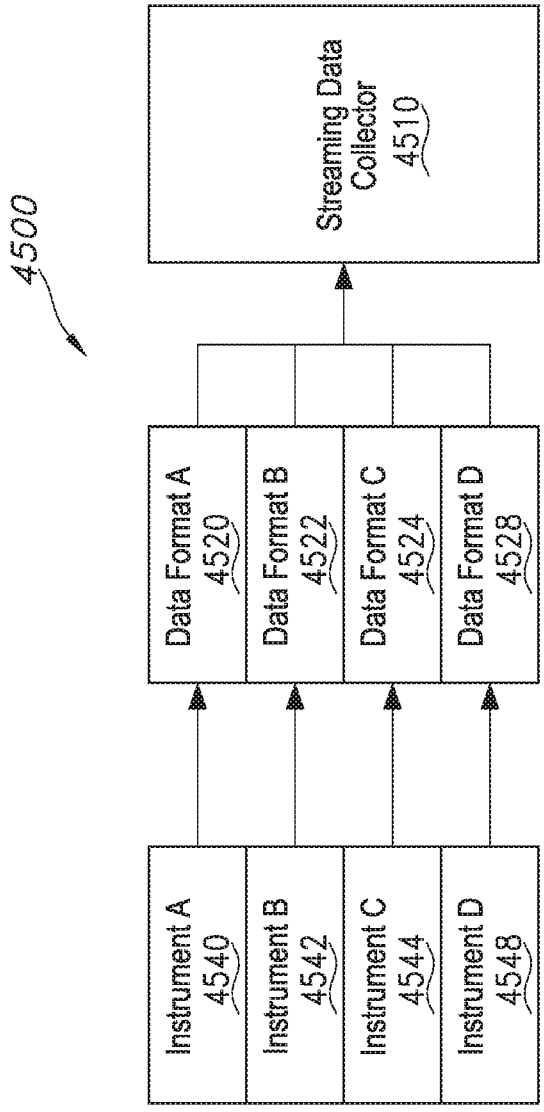
4500
Streaming Data Collector 4510
Data Format A 4520
Data Format B 4522
Data Format C 4524
Data Format D 4528
Instrument A 4540
Instrument B 4542
Instrument C 4544
Instrument D 4548

FIG. 18

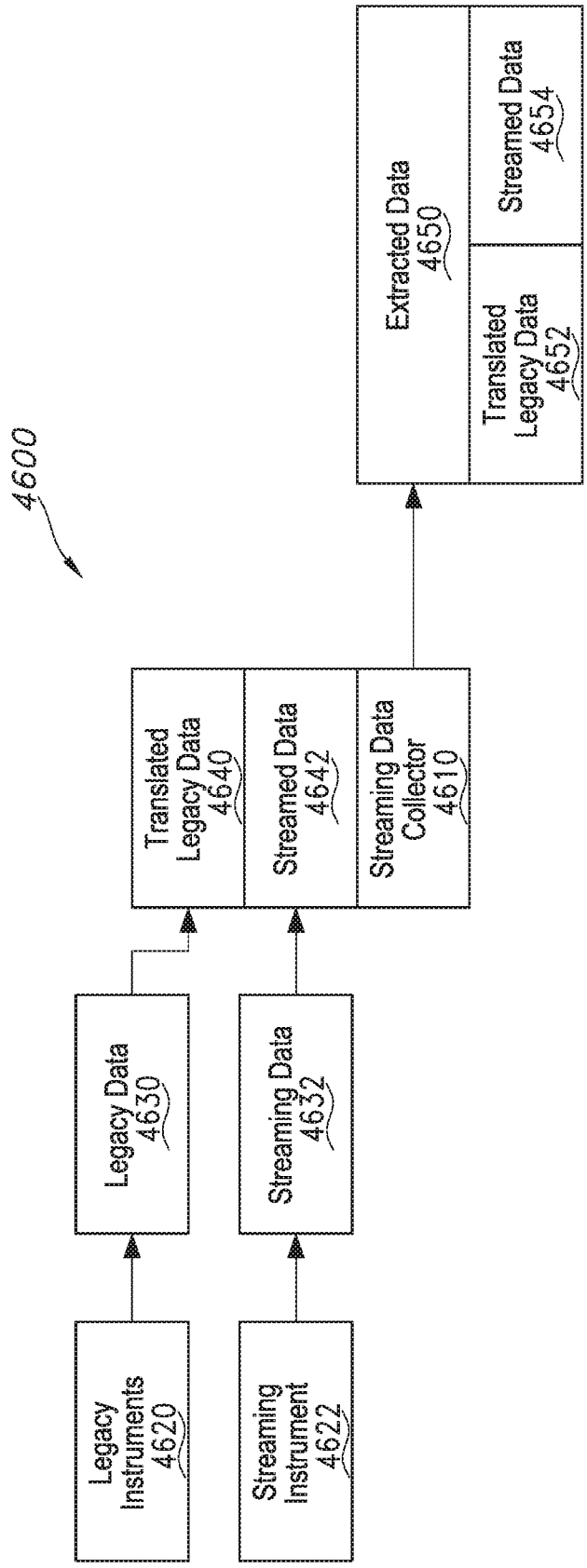
4600
Legacy Instruments 4620
Streaming Instrument 4622
Legacy Data 4630
Streaming Data 4632
Translated Legacy Data 4640
Streamed Data 4642
Streaming Data Collector 4610
Extracted Data 4650
Translated Legacy Data 4652
Streamed Data 4654

FIG. 19

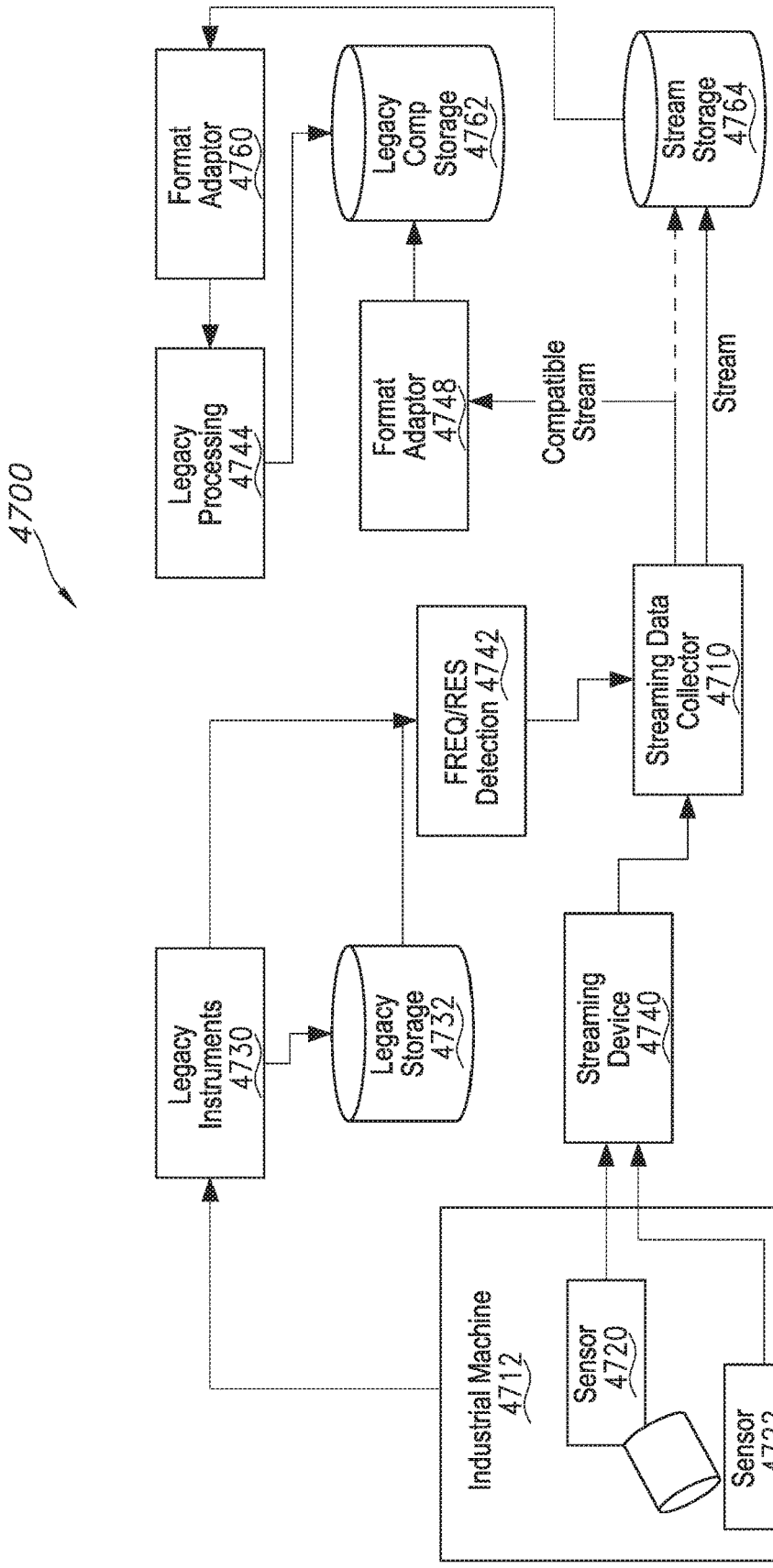
4700
Format Adaptor 4760
Legacy Comp Storage 4762
Stream Storage 4764
Legacy Processing 4744
Format Adaptor 4748
Compatible Stream
Stream
FREQ/RES Detection 4742
Streaming Data Collector 4710
Legacy Instruments 4730
Legacy Storage 4732
Streaming Device 4740
Industrial Machine 4712
Sensor 4720
Sensor 4722

FIG. 20

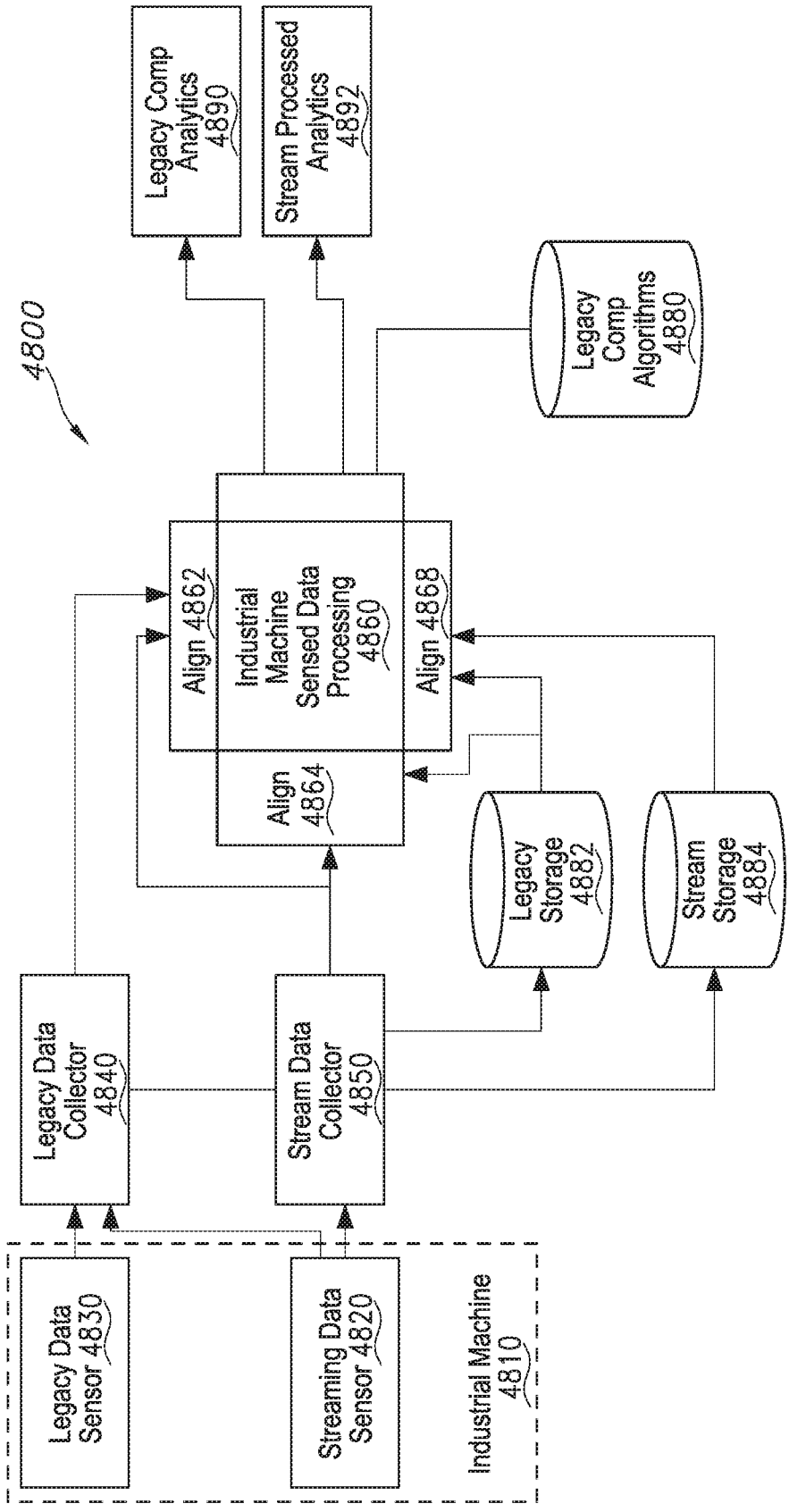
4800
Industrial Machine 4810
Legacy Data Sensor 4830
Streaming Data Sensor 4820
Legacy Data Collector 4840
Stream Data Collector 4850
Legacy Storage 4882
Stream Storage 4884
Align 4862
Industrial Machine Sensed Data Processing 4860
Align 4868
Align 4864
Legacy Comp Algorithms 4880
Legacy Comp Analytics 4890
Stream Processed Analytics 4892

FIG. 21

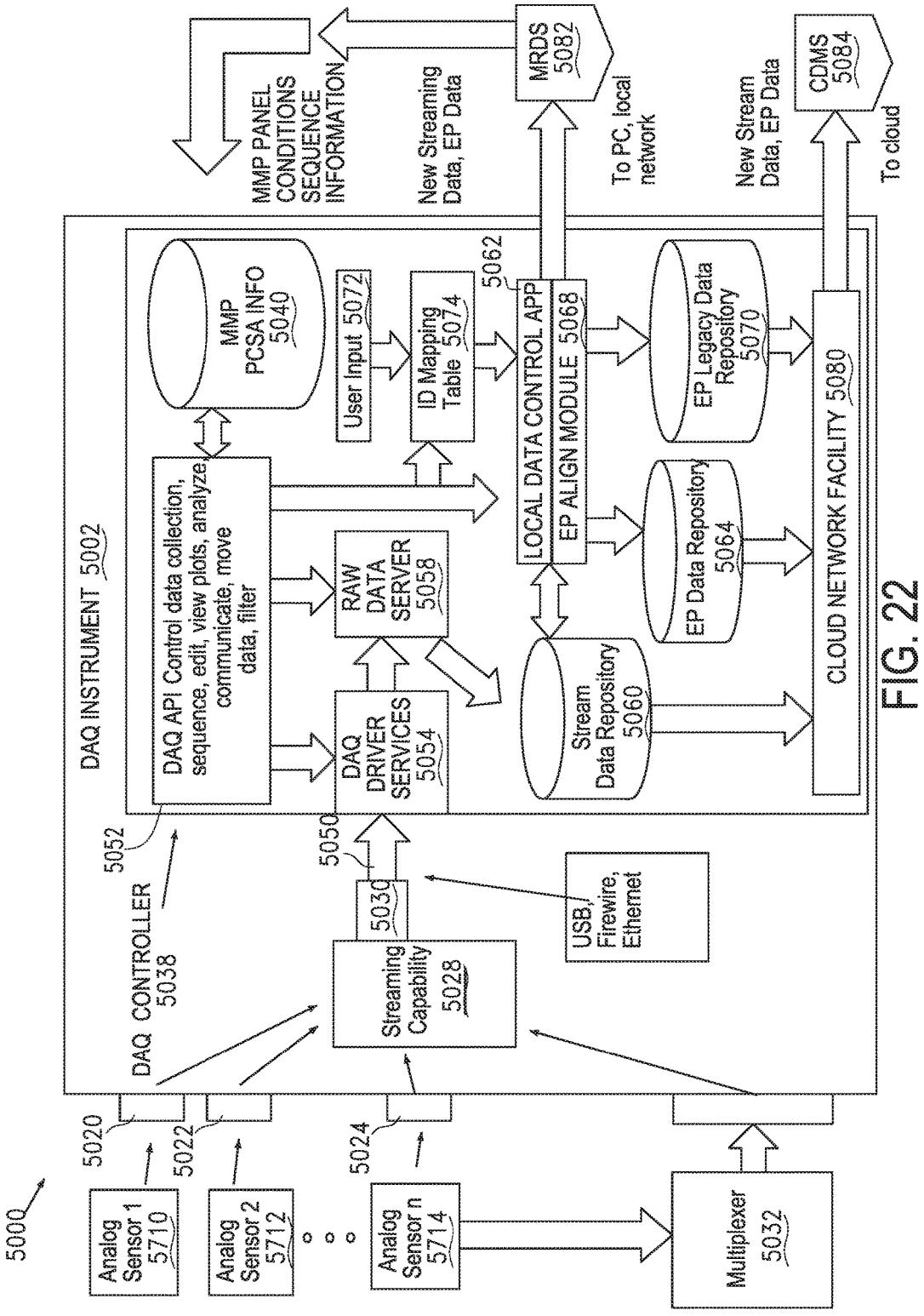
5000
Analog Sensor 1 5710
Analog Sensor 2 5712
Analog Sensor n 5714
5020
5022
5024
Multiplexer 5032
DAQ INSTRUMENT 5002
DAQ CONTROLLER 5038
5052
DAQ API Control data collection, sequence, edit, view plots, analyze, communicate, move data, filter
5050
DAQ DRIVER SERVICES 5054
RAW DATA SERVER 5058
5030
Streaming Capability 5028
USB, Firewire, Ethernet
MMP PCSA INFO 5040
User Input 5072
ID Mapping Table 5074
5062
LOCAL DATA CONTROL APP
EP ALIGN MODULE 5068
Stream Data Repository 5060
EP Data Repository 5064
EP Legacy Data Repository 5070
CLOUD NETWORK FACILITY 5080
MMP PANEL CONDITIONS SEQUENCE INFORMATION
New Streaming Data, EP Data
MRDS 5082
To PC, local network
New Stream Data, EP Data
CDMS 5084
To cloud

FIG. 22

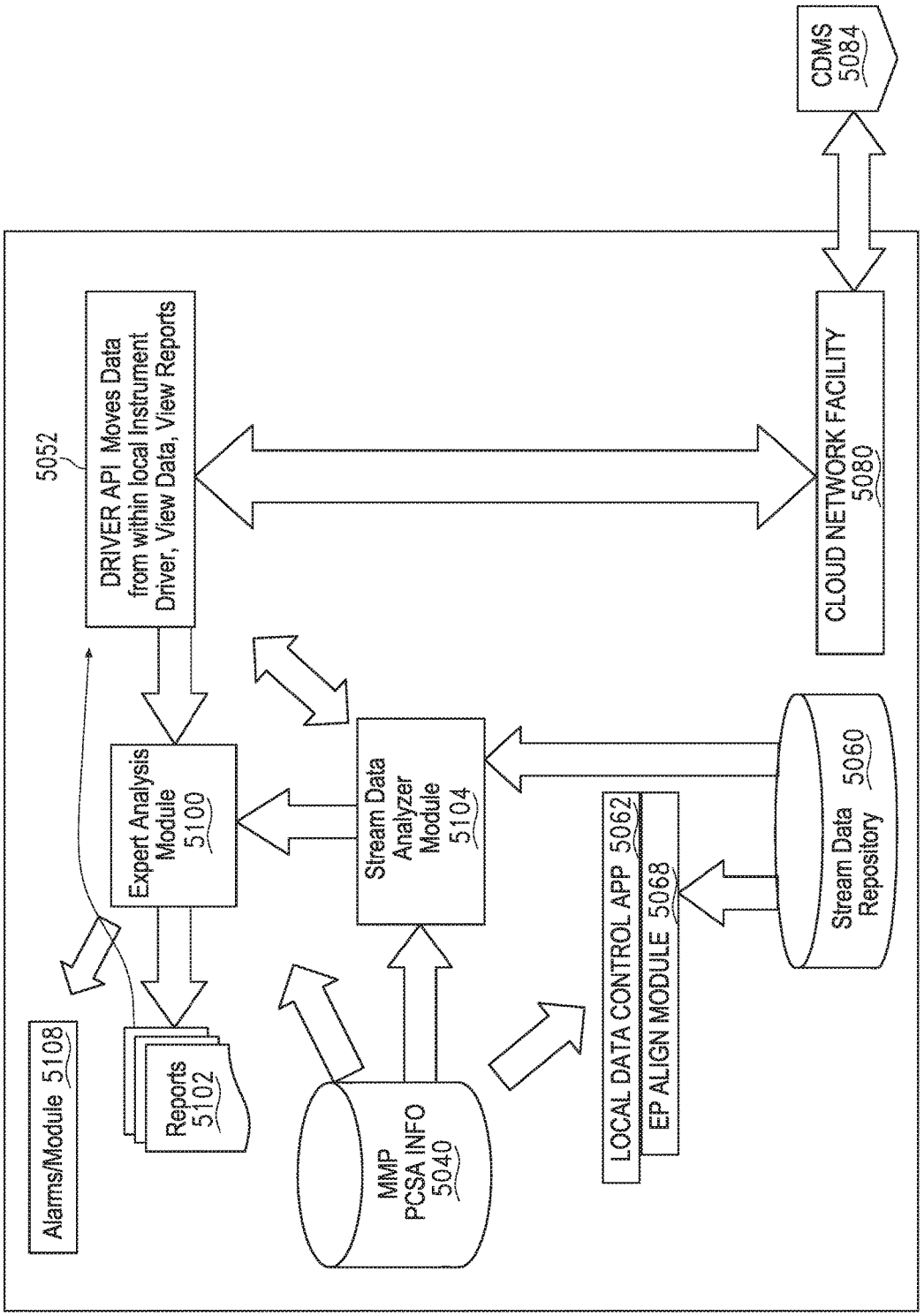
CDMS
5084
5052
DRIVER API Moves Data
from within local Instrument
Driver, View Data, View Reports
CLOUD NETWORK FACILITY
5080
Expert Analysis
Module
5100
Stream Data
Analyzer
Module
5104
Stream Data
Repository
5060
LOCAL DATA CONTROL APP 5062
EP ALIGN MODULE 5068
Alarms/Module 5108
Reports
5102
MMP
PCSA INFO
5040

FIG. 23

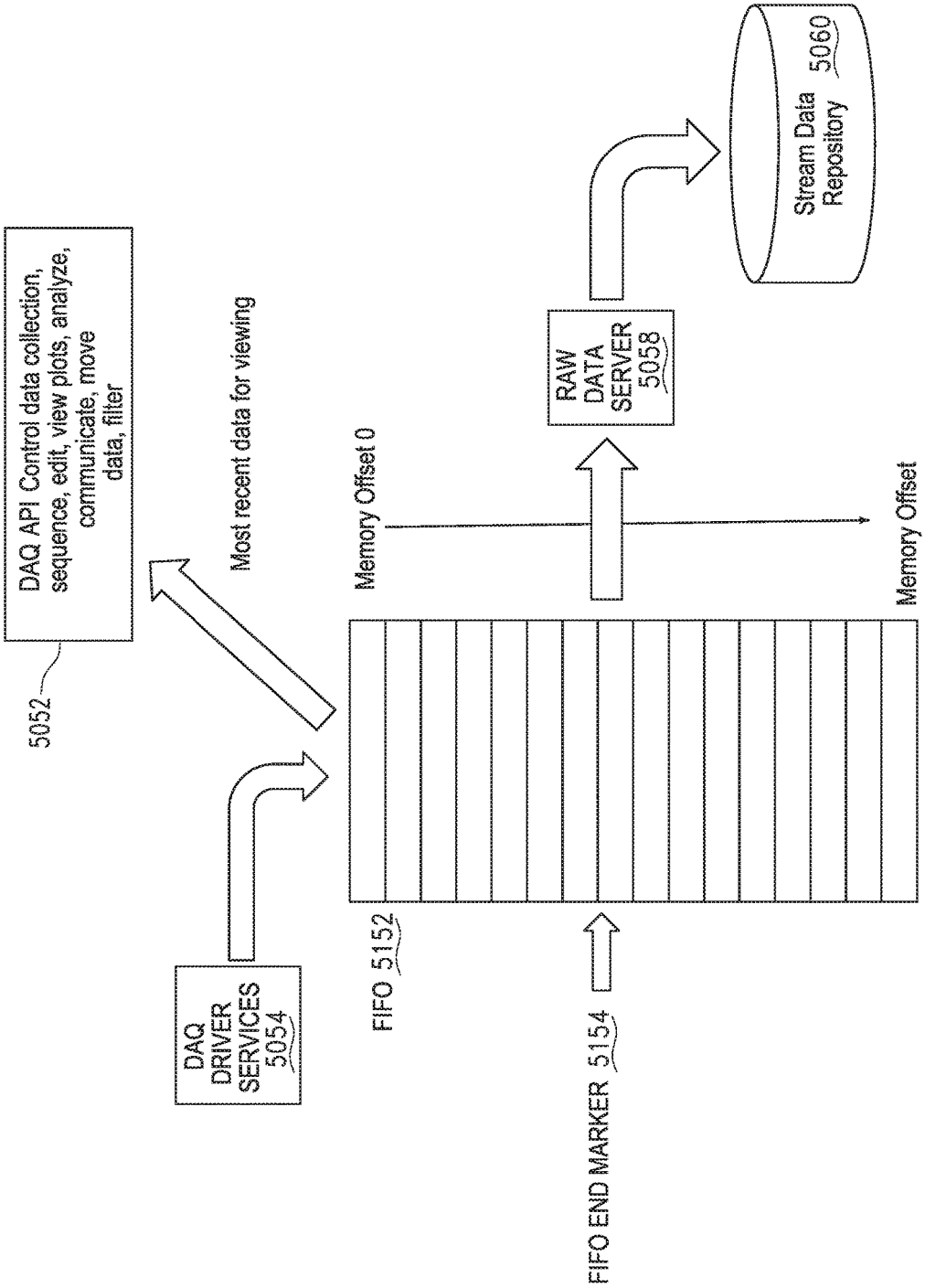
DAQ API Control data collection, sequence, edit, view plots, analyze, communicate, move data, filter
5052
Most recent data for viewing
Memory Offset 0
Memory Offset
RAW DATA SERVER 5058
Stream Data Repository 5060
DAQ DRIVER SERVICES 5054
FIFO 5152
FIFO END MARKER 5154

FIG. 24

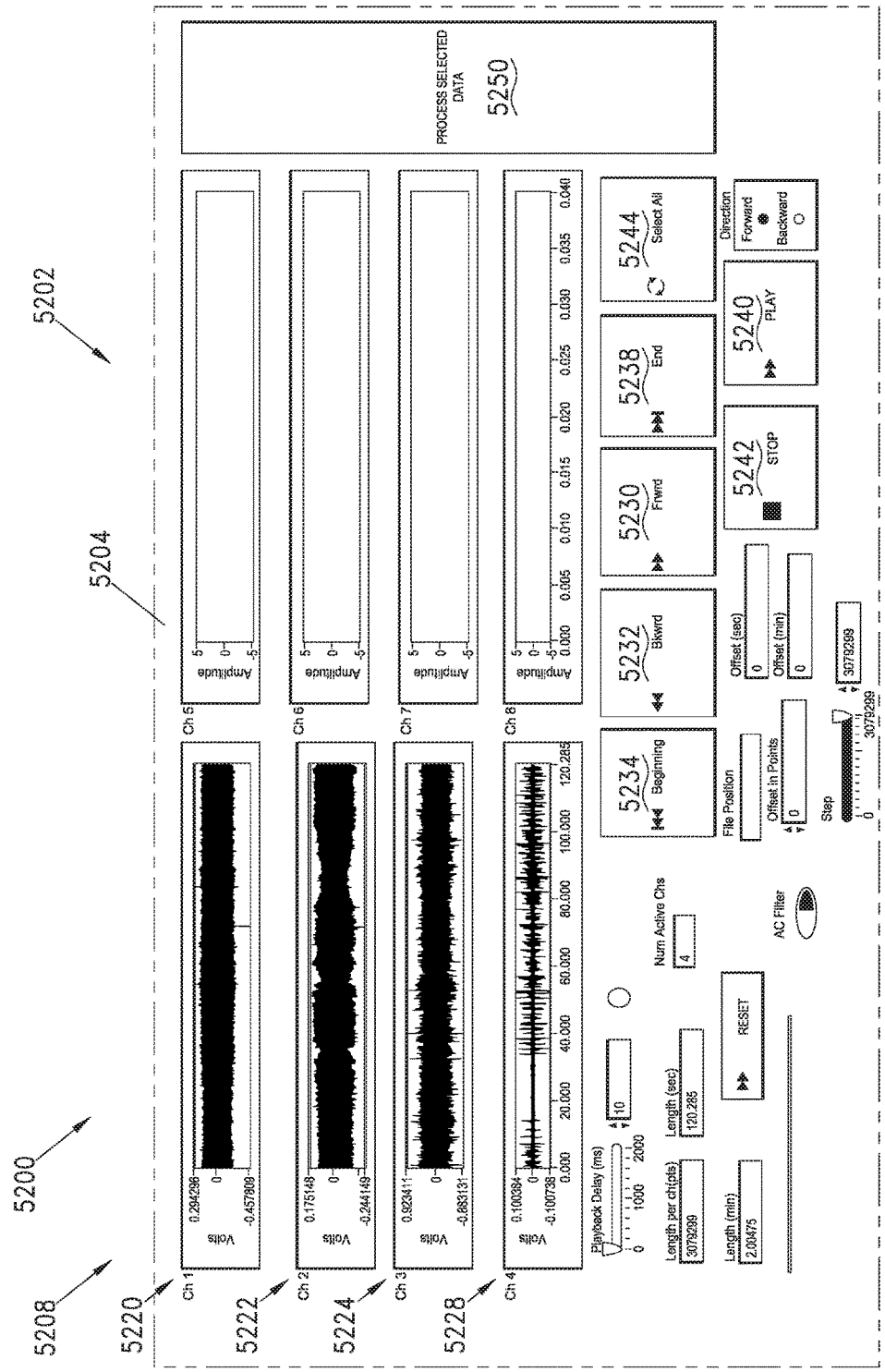
5202
5204
5200
5208
5220
5222
5224
5228
PROCESS SELECTED DATA
5250
Ch 1
Ch 2
Ch 3
Ch 4
Ch 5
Ch 6
Ch 7
Ch 8
Amplitude
Volts
5234 Beginning
5232 Bkwrd
5230 Frwrd
5242 STOP
5238 End
5240 PLAY
5244 Select All
Direction
Forward
Backward
File Position
Offset in Points
Offset (sec)
Offset (min)
Step
Playback Delay (ms)
Length per ch(pts)
Length (sec)
Length (min)
Num Active Chs
RESET
AC Filter

FIG. 25

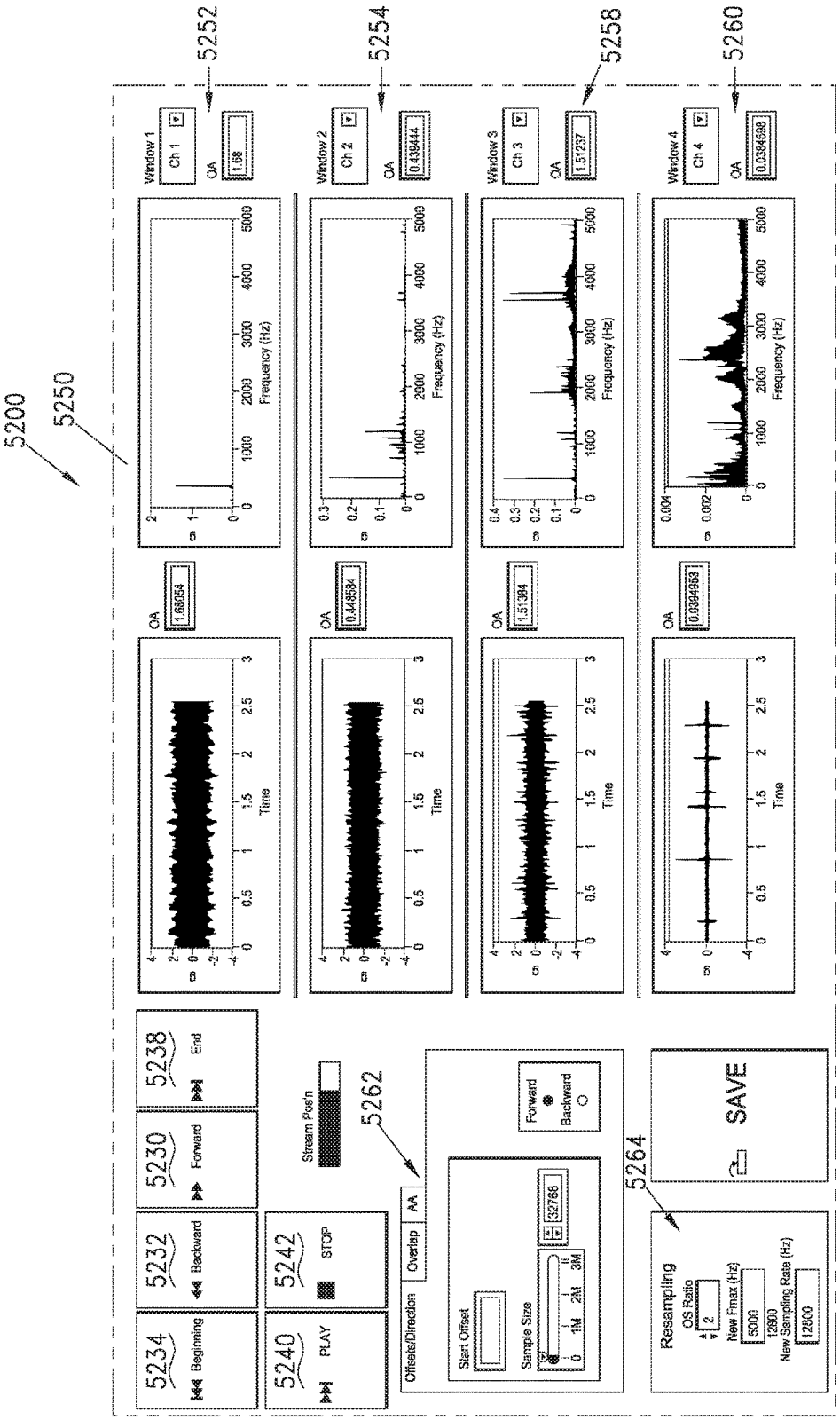
5200
5250
5252
5254
5258
5260
5262
5264
Window 1
Ch 1
OA
1.68
Window 2
Ch 2
0.438444
Window 3
Ch 3
1.51257
Window 4
Ch 4
0.0384698
1.68664
0.446584
1.51384
0.0394953
Frequency (Hz)
Time
5234
Beginning
5232
Backward
5230
Forward
5238
End
5240
PLAY
5242
STOP
Stream Pos'n
Offsets/Direction
Overlap
AA
Start Offset
Sample Size
32768
1M
2M
3M
Forward
Backward
Resampling
OS Ratio
New Fmax (Hz)
5000
12800
New Sampling Rate (Hz)
12800
SAVE

FIG. 26

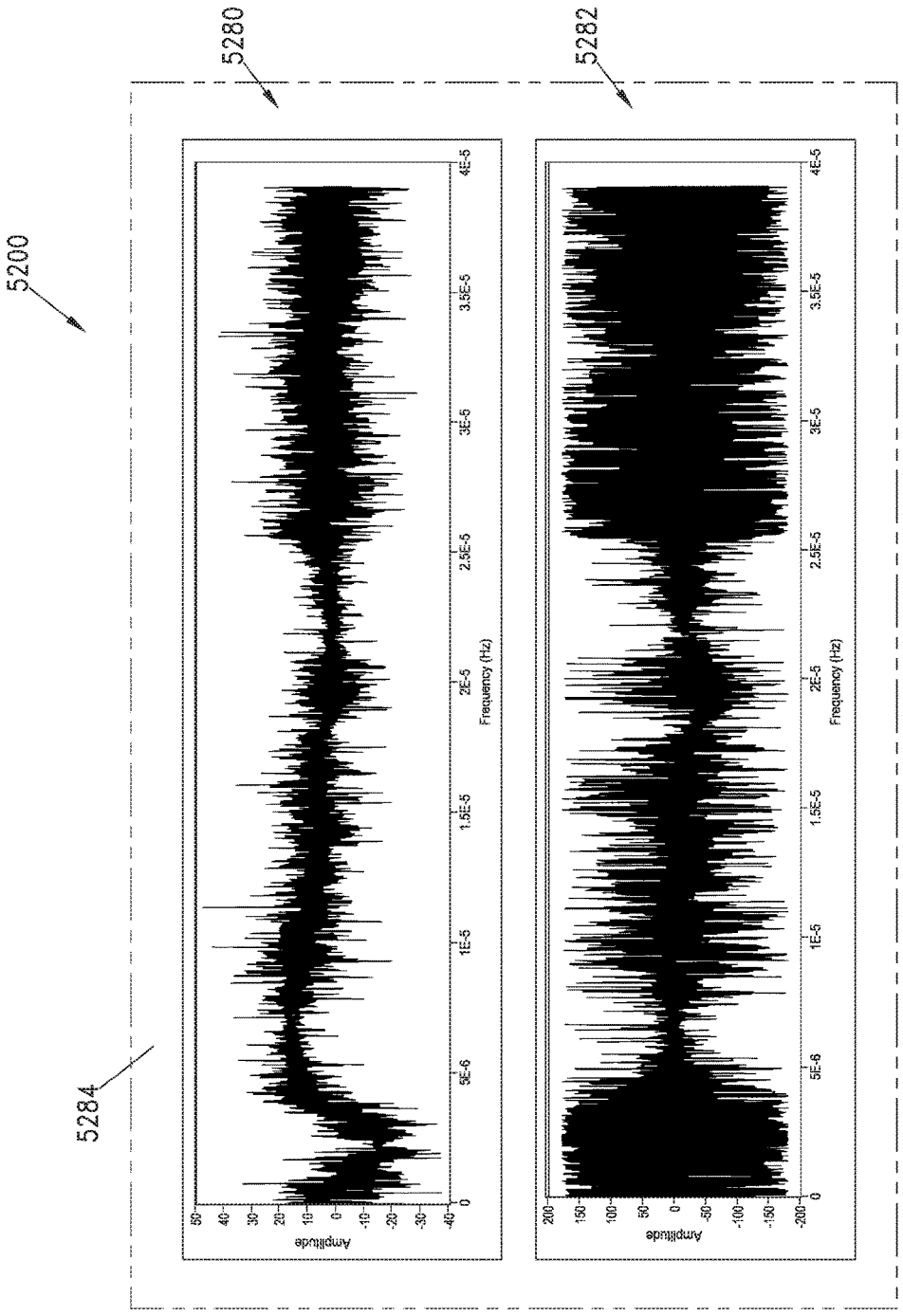
5200
5280
5282
5284
Amplitude
Frequency (Hz)
Amplitude
Frequency (Hz)

FIG. 27

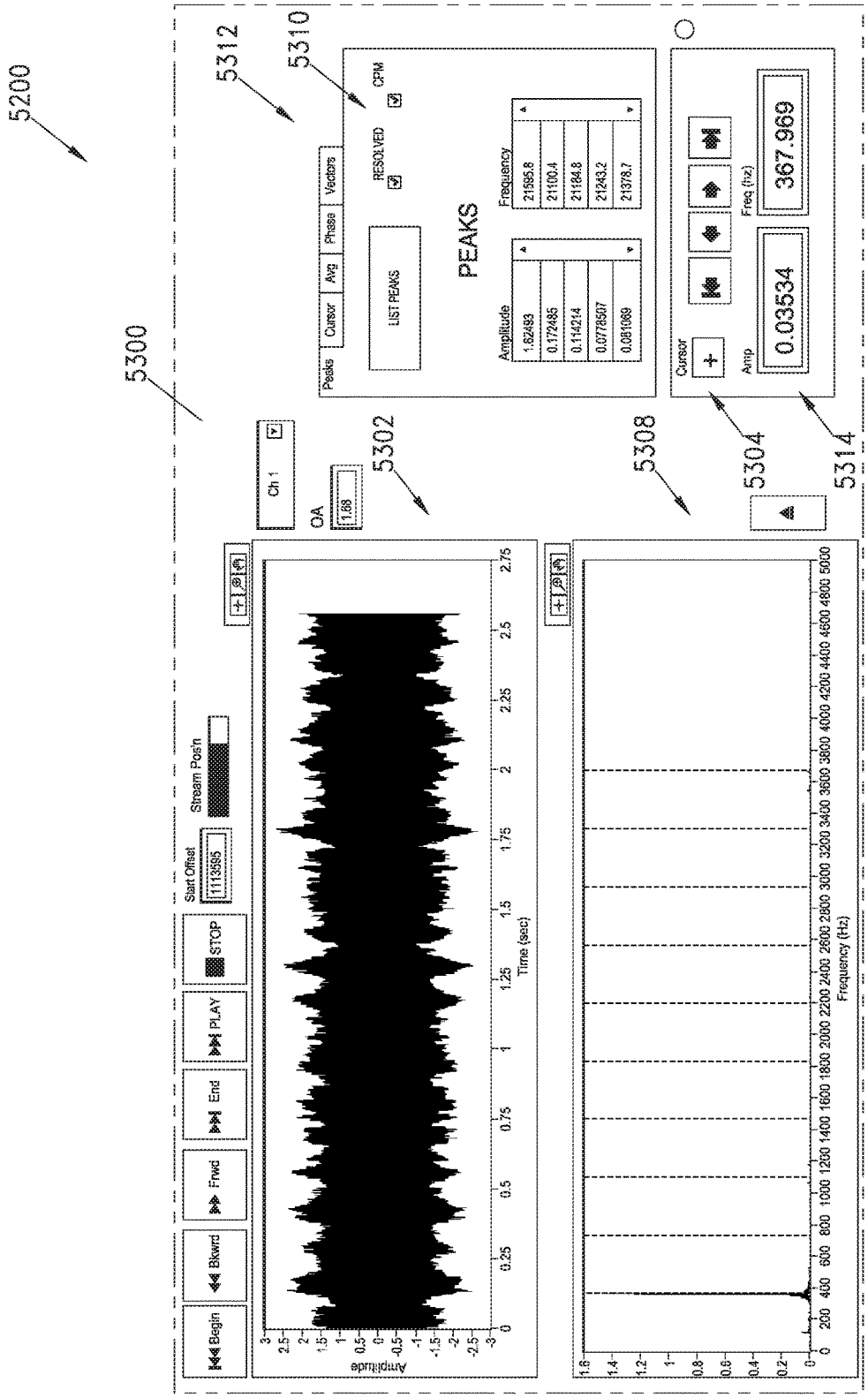
5200
5300
5302
5304
5308
5310
5312
5314
PEAKS
LIST PEAKS
RESOLVED
CPM
Peaks
Cursor
Avg
Phase
Vectors
Amplitude
Frequency
1.62493
0.172485
0.114214
0.0778507
0.0691069
21585.8
21100.4
21184.8
21243.2
21378.7
Cursor
Amp
Freq (hz)
0.03534
367.969
Ch 1
OA
1.69
Start Offset
11113595
Stream Posn
Begin
Bkwrd
Frwd
End
PLAY
STOP
Amplitude
Time (sec)
Frequency (Hz)

FIG. 28

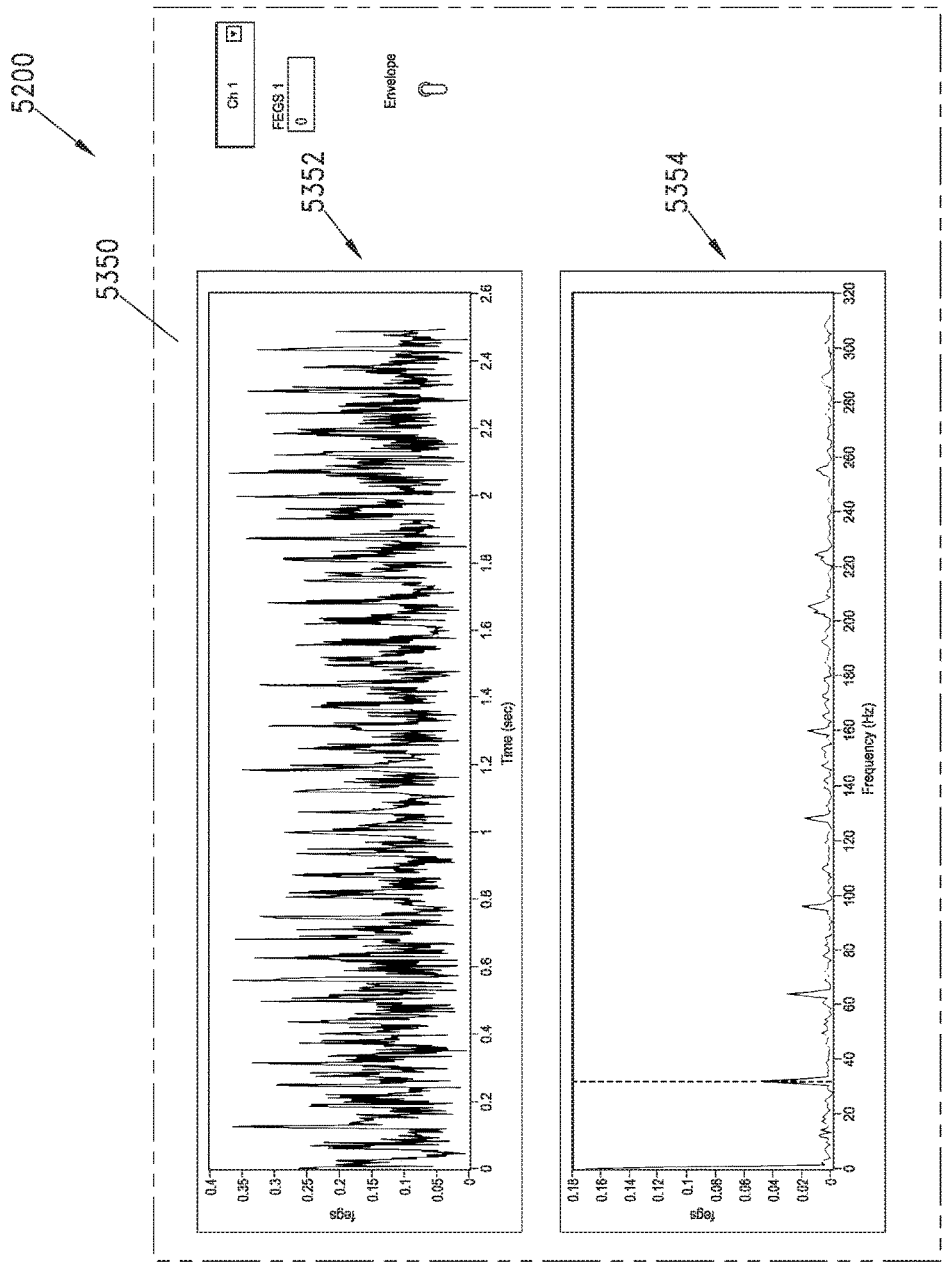
5200
5350
5352
5354
Ch 1
FEGS 1
0
Envelope
0
Time (sec)
fegs
Frequency (Hz)
fegs

FIG. 29

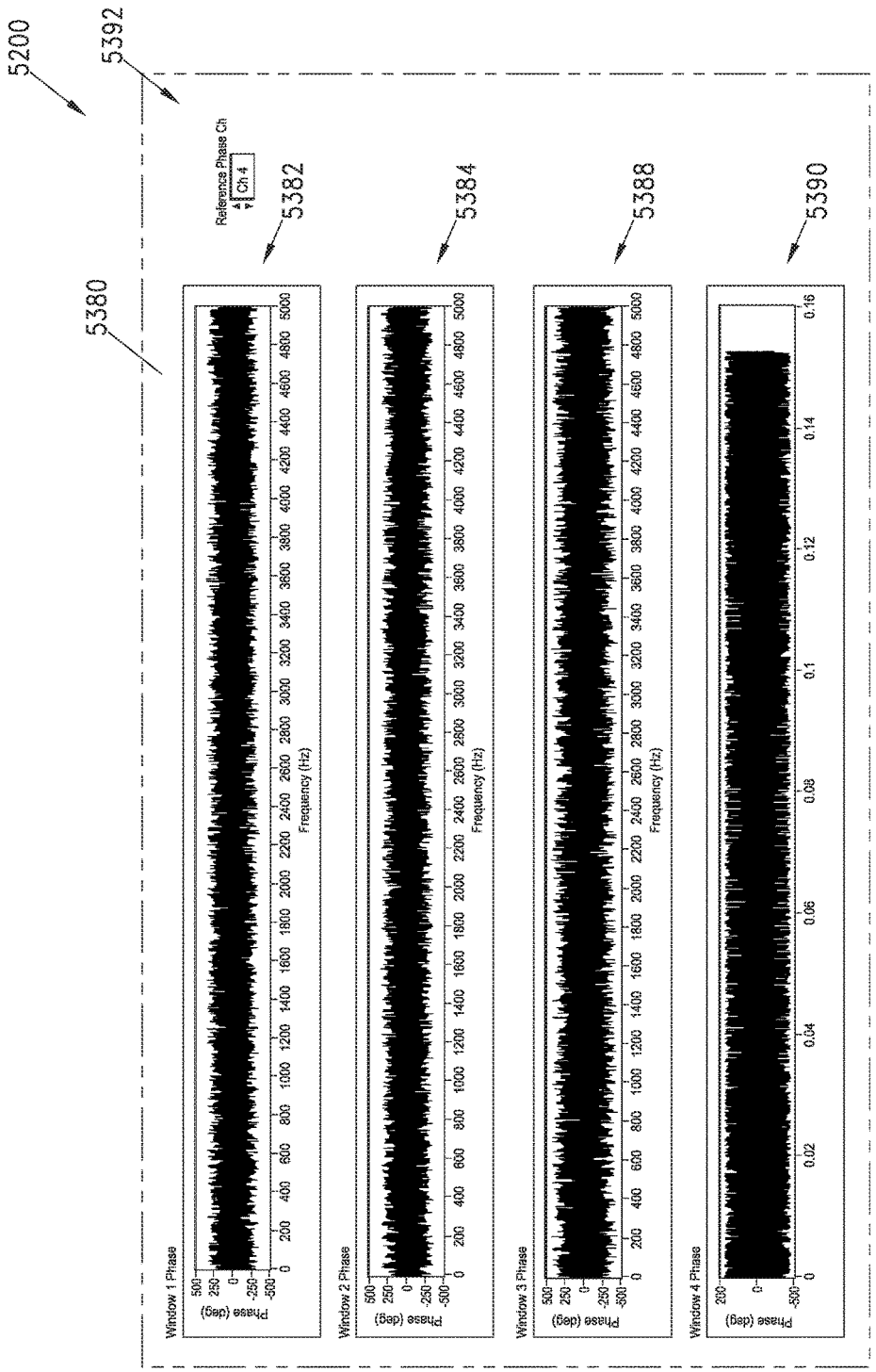
5200
5392
5380
5382
5384
5388
5390
Reference Phase Ch
Ch 4
Window 1 Phase
Window 2 Phase
Window 3 Phase
Window 4 Phase
Phase (deg)
Frequency (Hz)

FIG. 30

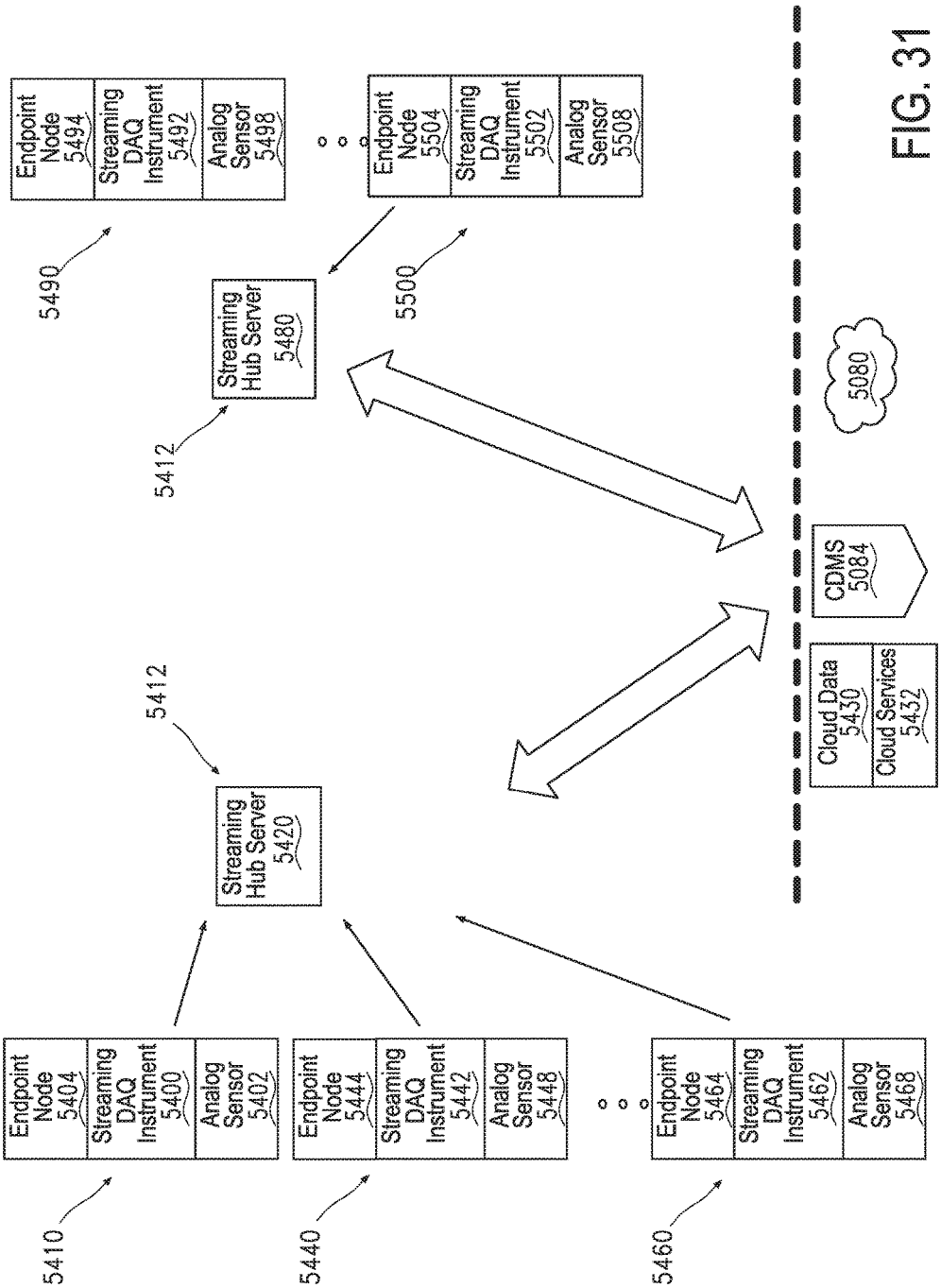
Endpoint Node 5494
Streaming DAQ Instrument 5492
Analog Sensor 5498
5490
Endpoint Node 5504
Streaming DAQ Instrument 5502
Analog Sensor 5508
5500
Streaming Hub Server 5480
5412
5080
CDMS 5084
Cloud Data 5430
Cloud Services 5432
5412
Streaming Hub Server 5420
Endpoint Node 5404
Streaming DAQ Instrument 5400
Analog Sensor 5402
5410
Endpoint Node 5444
Streaming DAQ Instrument 5442
Analog Sensor 5448
5440
Endpoint Node 5464
Streaming DAQ Instrument 5462
Analog Sensor 5468
5460

FIG. 31

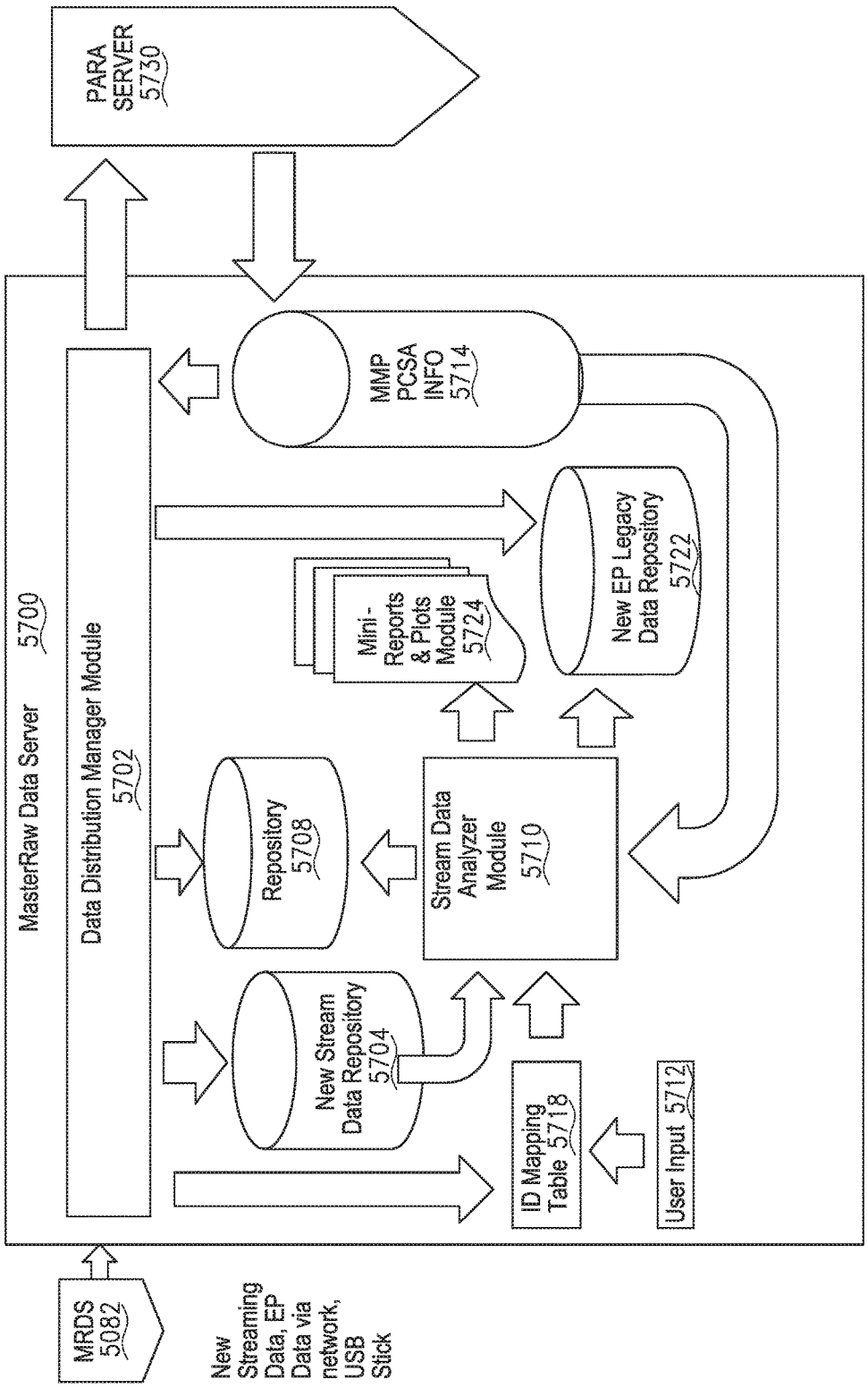
PARA SERVER 5730
MasterRaw Data Server 5700
Data Distribution Manager Module 5702
MMP PCSA INFO 5714
New EP Legacy Data Repository 5722
Mini-Reports & Plots Module 5724
Repository 5708
Stream Data Analyzer Module 5710
New Stream Data Repository 5704
ID Mapping Table 5718
User Input 5712
MRDS 5082
New Streaming Data, EP Data via network, USB Stick

FIG. 32

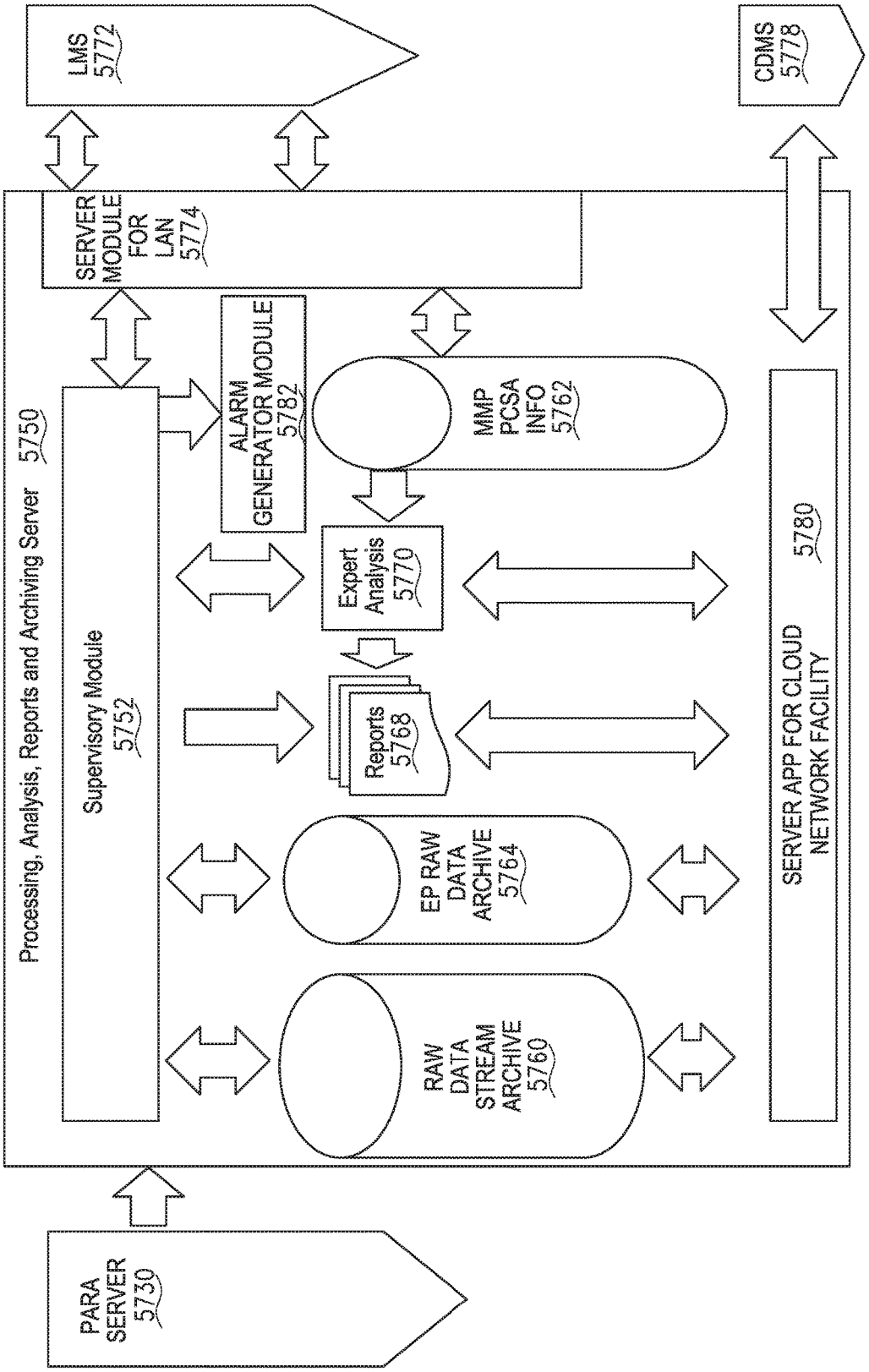
LMS 5772
CDMS 5778
SERVER MODULE FOR LAN 5774
Processing, Analysis, Reports and Archiving Server 5750
Supervisory Module 5752
ALARM GENERATOR MODULE 5782
MMP PCSA INFO 5762
Expert Analysis 5770
Reports 5768
EP RAW DATA ARCHIVE 5764
RAW DATA STREAM ARCHIVE 5760
SERVER APP FOR CLOUD NETWORK FACILITY 5780
PARA SERVER 5730

FIG. 33

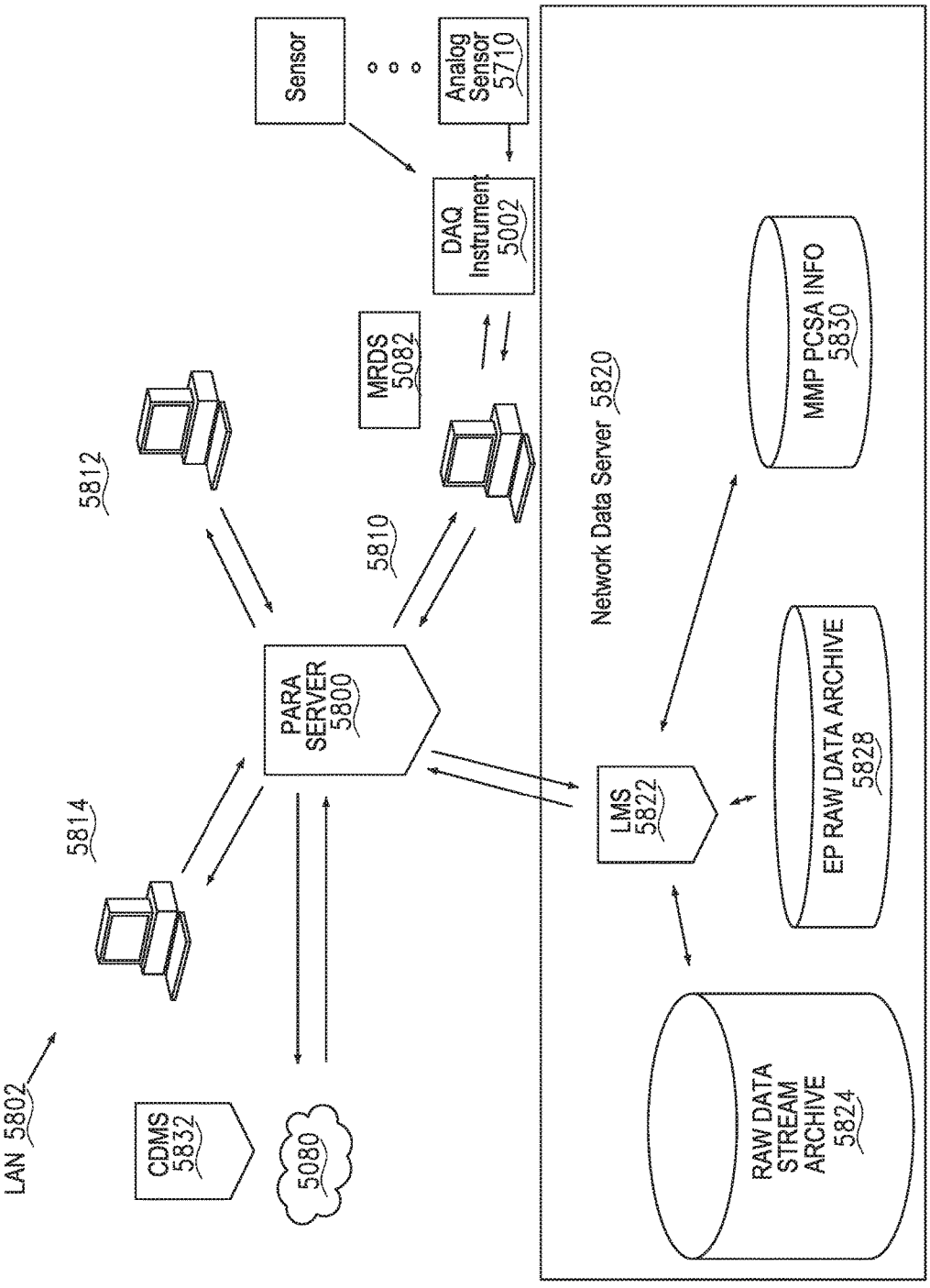
LAN 5802
CDMS 5832
5080
5814
5812
PARA SERVER 5800
5810
MRDS 5082
DAQ Instrument 5002
Sensor
Analog Sensor 5710
Network Data Server 5820
LMS 5822
MMP PCSA INFO 5830
EP RAW DATA ARCHIVE 5828
RAW DATA STREAM ARCHIVE 5824

FIG. 34

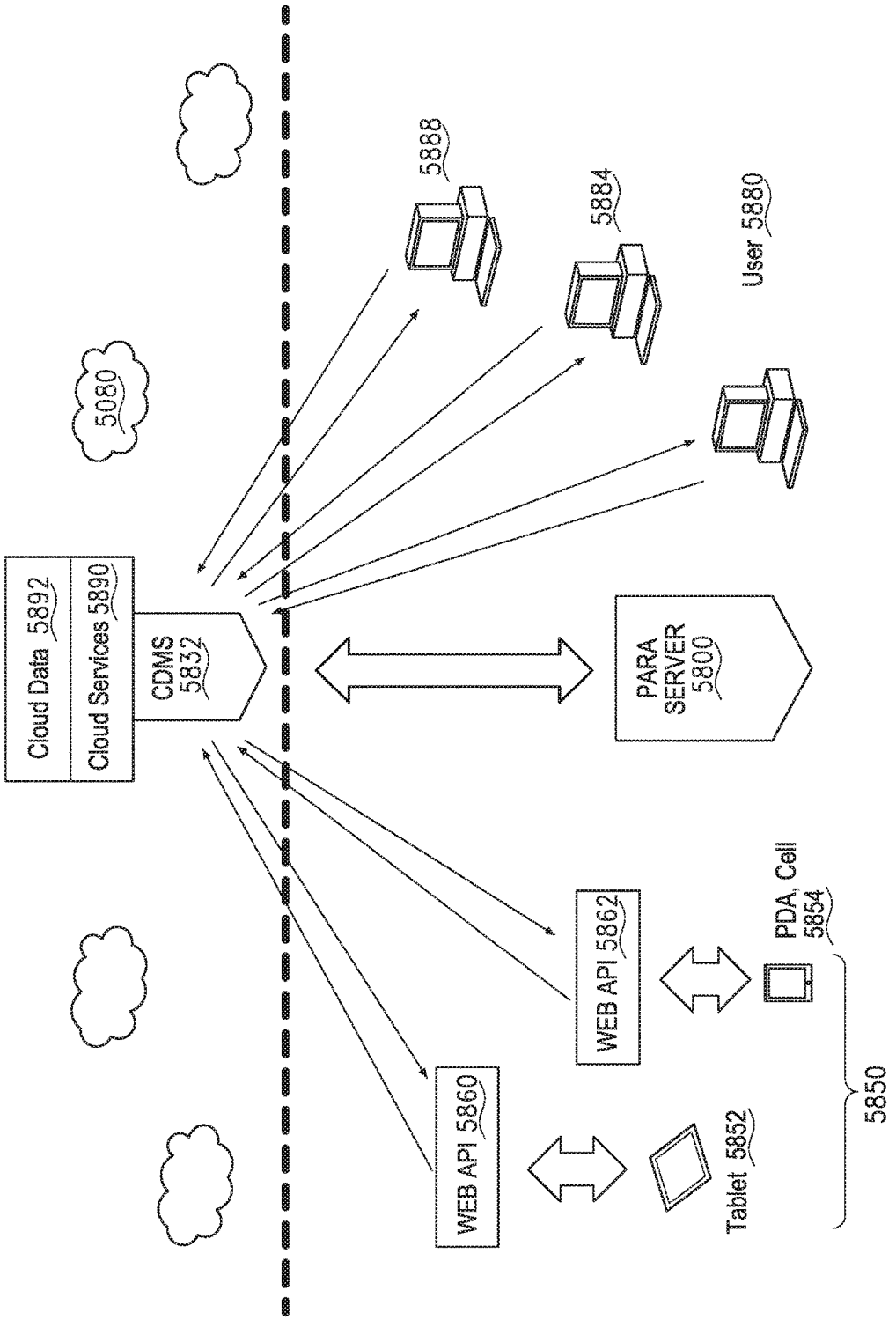
5080
5888
5884
User 5880
Cloud Data 5892
Cloud Services 5890
CDMS 5832
PARA SERVER 5800
WEB API 5862
PDA, Cell 5854
WEB API 5860
Tablet 5852
5850

FIG. 35

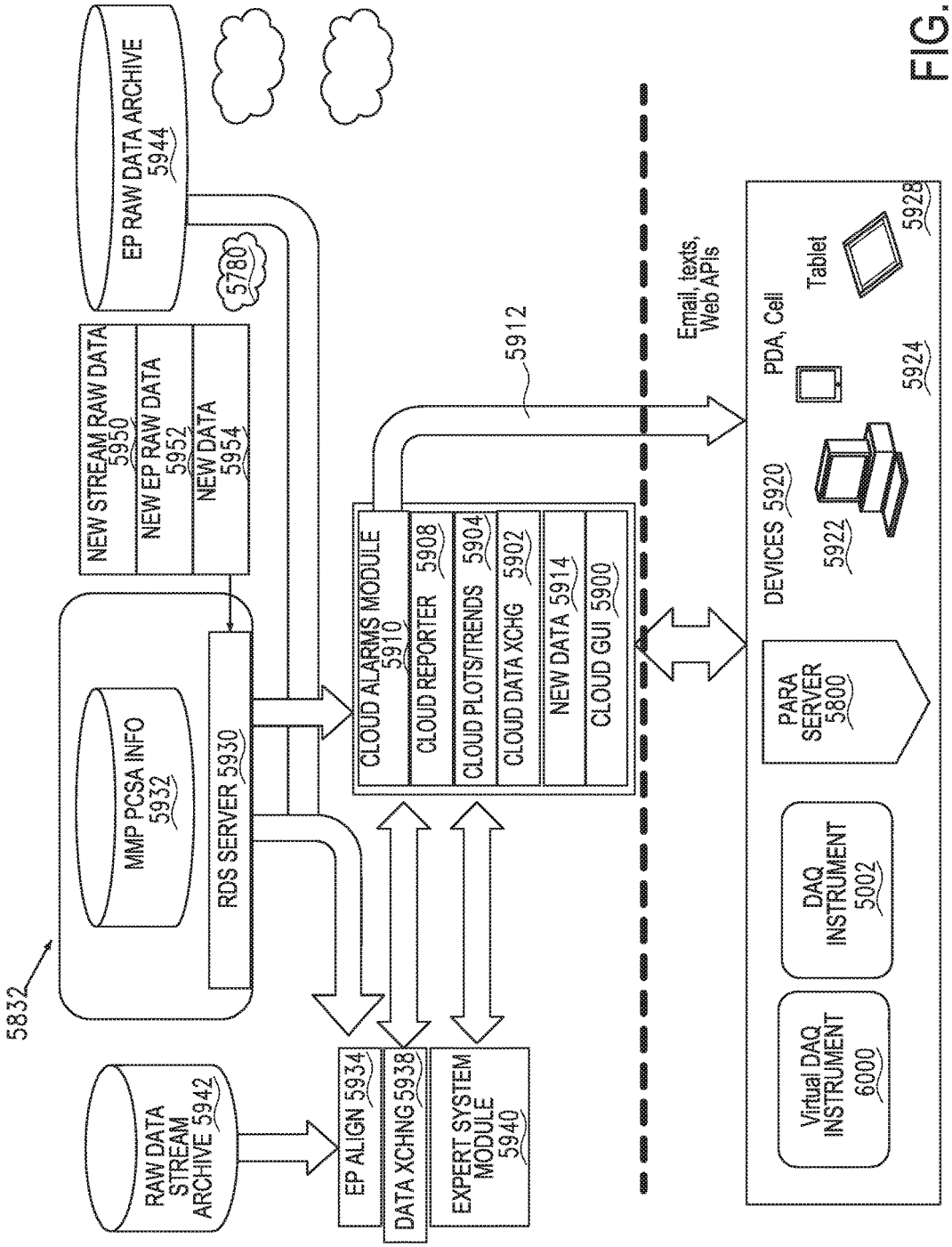
5832
RAW DATA STREAM ARCHIVE 5942
EP ALIGN 5934
DATA XCHNG 5938
EXPERT SYSTEM MODULE 5940
MMP PCSA INFO 5932
RDS SERVER 5930
NEW STREAM RAW DATA 5950
NEW EP RAW DATA 5952
NEW DATA 5954
EP RAW DATA ARCHIVE 5944
5780
CLOUD ALARMS MODULE 5910
CLOUD REPORTER 5908
CLOUD PLOTS/TRENDS 5904
CLOUD DATA XCHG 5902
NEW DATA 5914
CLOUD GUI 5900
5912
Email, texts, Web APIs
DEVICES 5920
PDA, Cell
Tablet
5928
5924
5922
PARA SERVER 5800
DAQ INSTRUMENT 5002
Virtual DAQ INSTRUMENT 6000

FIG. 36

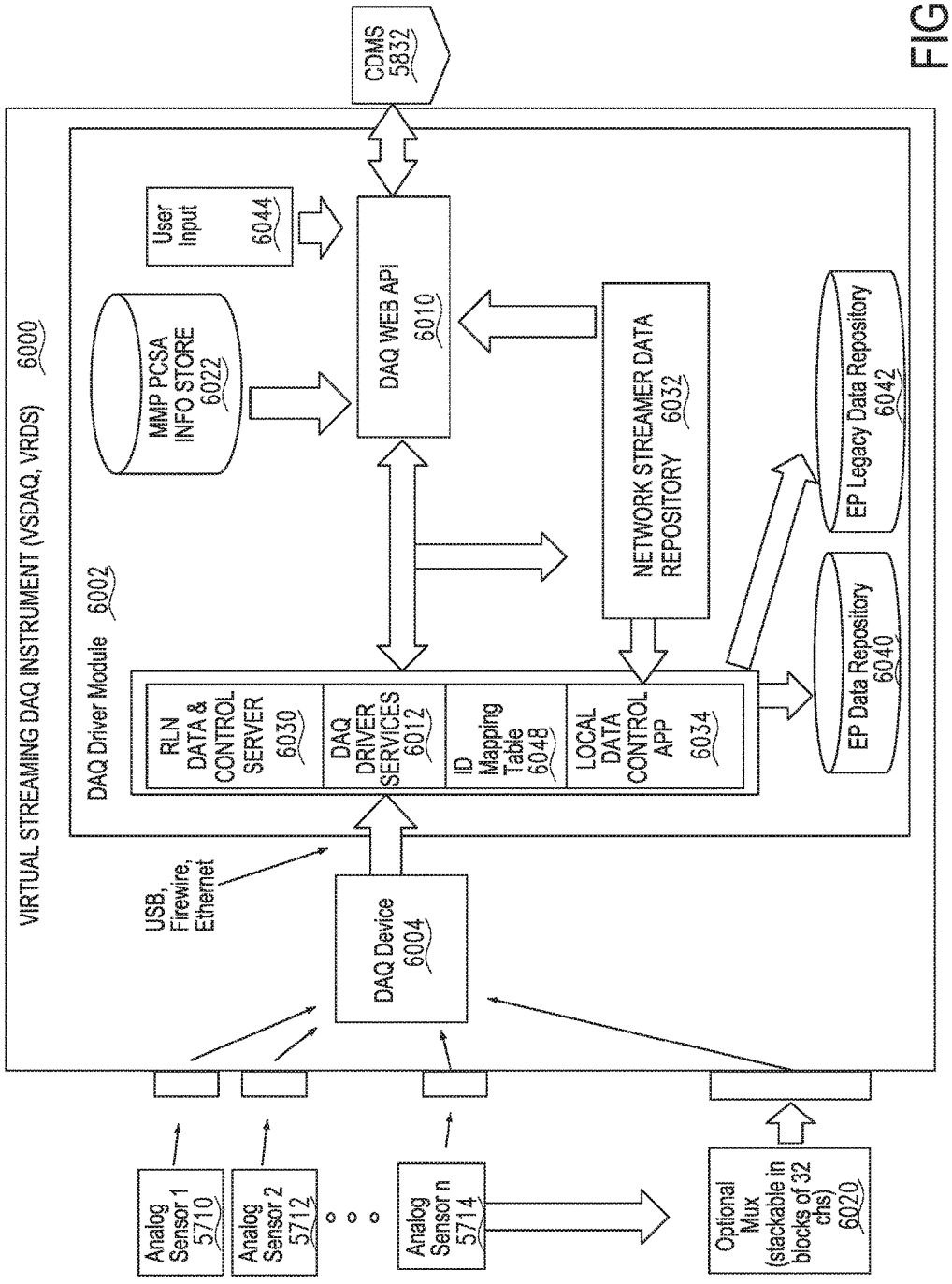
VIRTUAL STREAMING DAQ INSTRUMENT (VSDAQ, VRDS) 6000
DAQ Driver Module 6002
CDMS 5832
User Input 6044
DAQ WEB API 6010
MMP PCSA INFO STORE 6022
NETWORK STREAMER DATA REPOSITORY 6032
EP Legacy Data Repository 6042
EP Data Repository 6040
RLN DATA & CONTROL SERVER 6030
DAQ DRIVER SERVICES 6012
ID Mapping Table 6048
LOCAL DATA CONTROL APP 6034
USB, Firewire, Ethernet
DAQ Device 6004
Analog Sensor 1 5710
Analog Sensor 2 5712
Analog Sensor n 5714
Optional Mux (stackable in blocks of 32 chs) 6020

FIG. 37

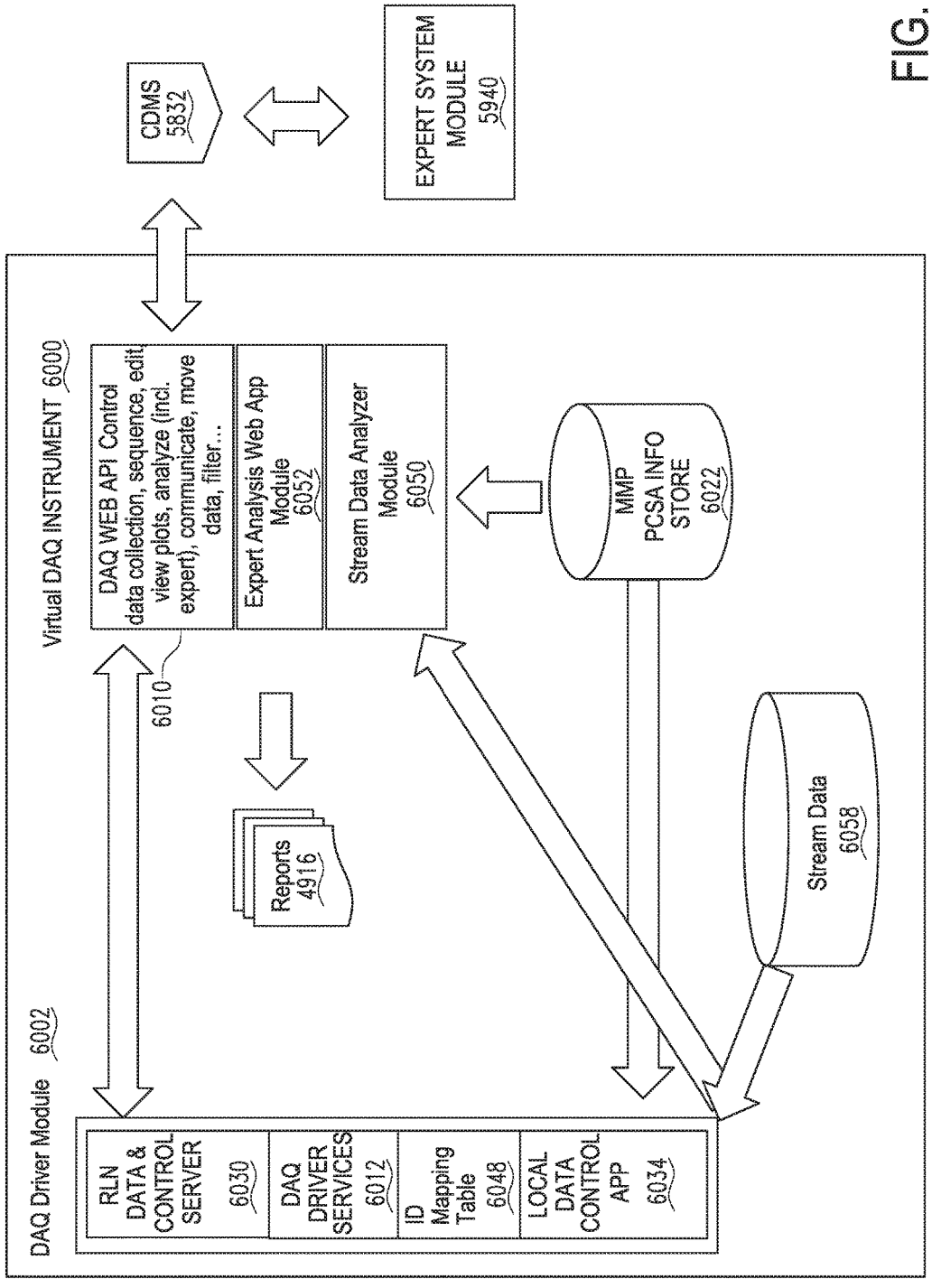
CDMS
5832
EXPERT SYSTEM
MODULE
5940
Virtual DAQ INSTRUMENT 6000
DAQ WEB API Control
data collection, sequence, edit,
view plots, analyze (incl.
expert), communicate, move
data, filter…
Expert Analysis Web App
Module
6052
Stream Data Analyzer
Module
6050
6010
MMP
PCSA INFO
STORE
6022
Reports
4916
Stream Data
6058
DAQ Driver Module 6002
RLN
DATA &
CONTROL
SERVER
6030
DAQ
DRIVER
SERVICES
6012
ID
Mapping
Table
6048
LOCAL
DATA
CONTROL
APP
6034

FIG. 38

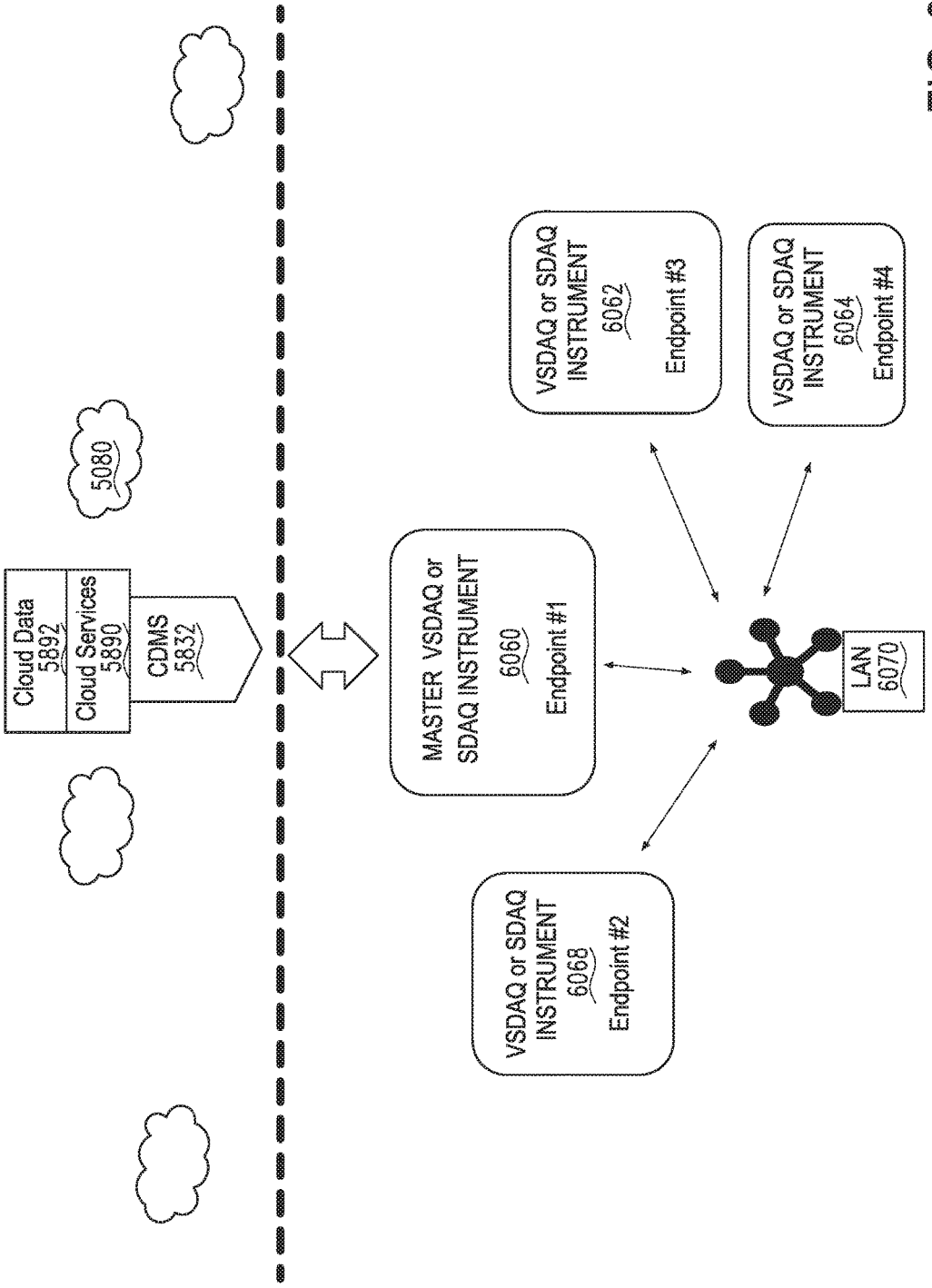
Cloud Data
5892
Cloud Services
5890
CDMS
5832
5080
MASTER VSDAQ or
SDAQ INSTRUMENT
6060
Endpoint #1
VSDAQ or SDAQ
INSTRUMENT
6062
Endpoint #3
VSDAQ or SDAQ
INSTRUMENT
6064
Endpoint #4
VSDAQ or SDAQ
INSTRUMENT
6068
Endpoint #2
LAN
6070

FIG. 39

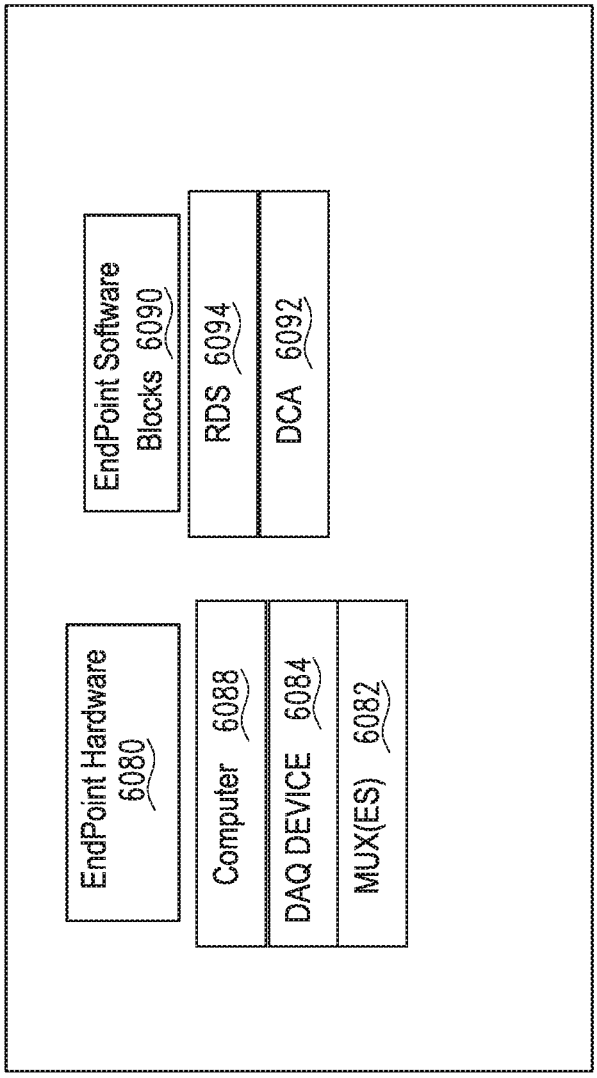
EndPoint Hardware 6080
Computer 6088
DAQ DEVICE 6084
MUX(ES) 6082
EndPoint Software Blocks 6090
RDS 6094
DCA 6092

FIG. 40

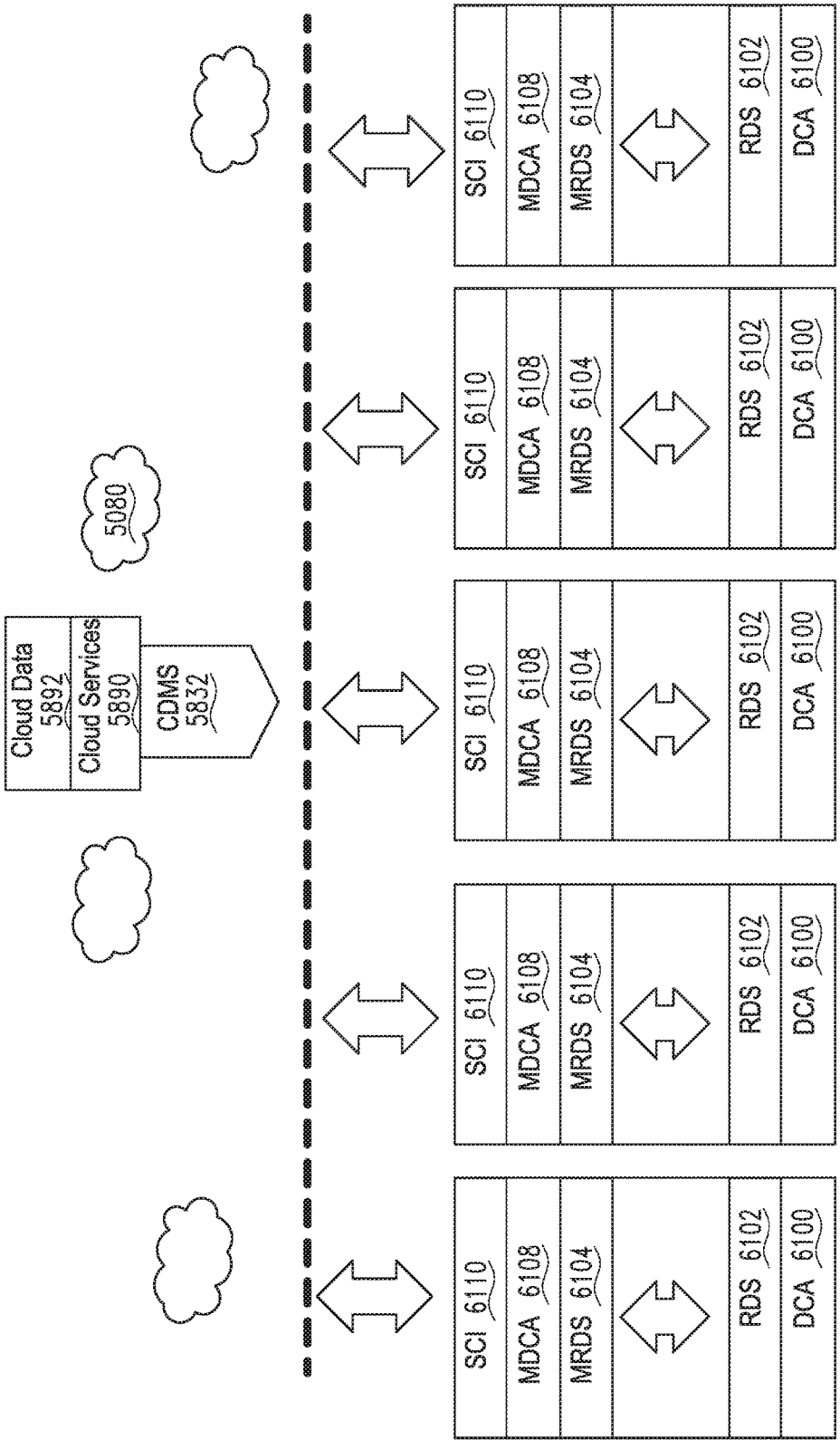
Cloud Data 5892
Cloud Services 5890
CDMS 5832
5080
SCI 6110
MDCA 6108
MRDS 6104
RDS 6102
DCA 6100

FIG. 41

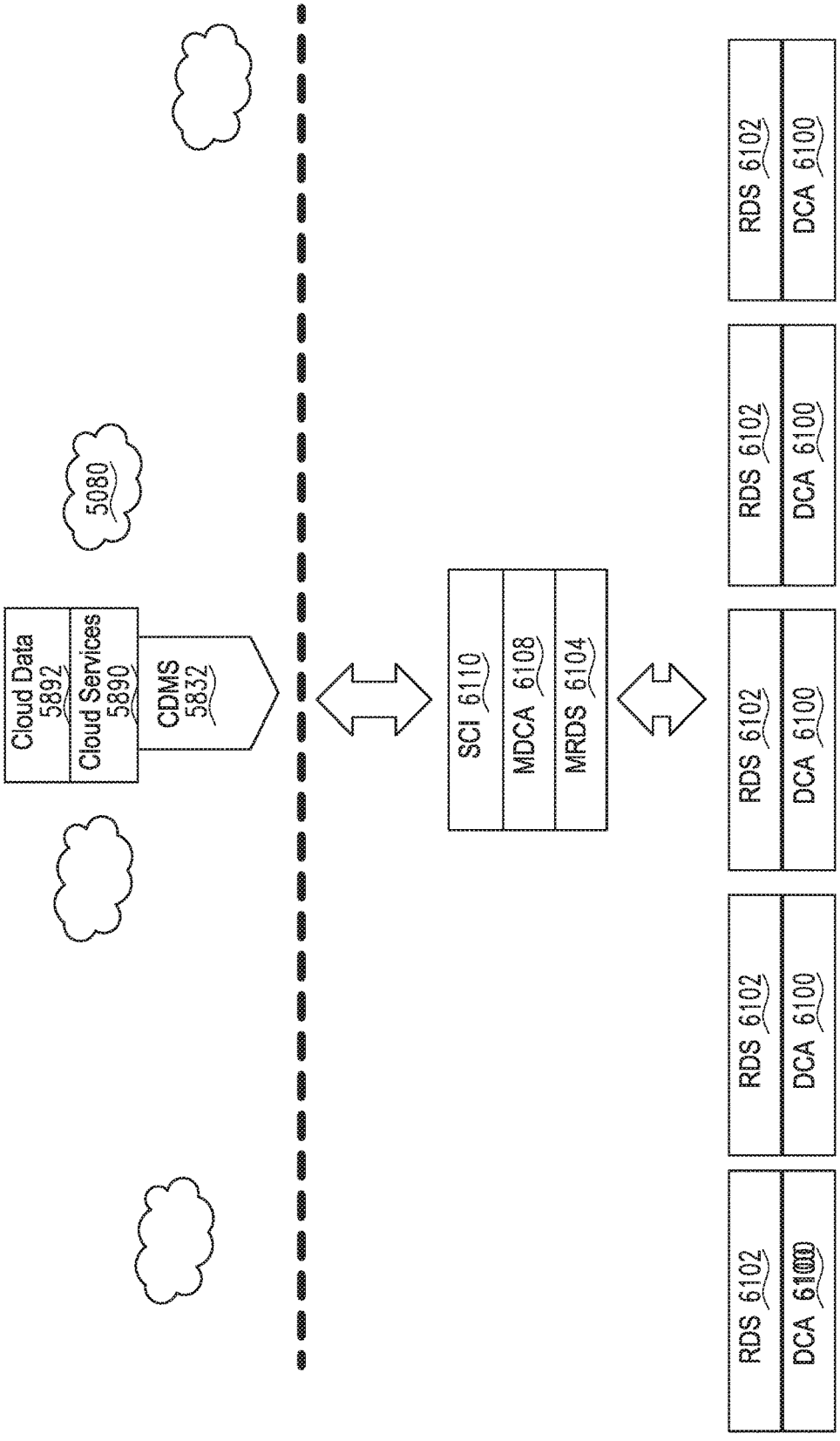
Cloud Data 5892
Cloud Services 5890
CDMS 5832
5080
SCI 6110
MDCA 6108
MRDS 6104
RDS 6102
DCA 6100
RDS 6102
DCA 6100
RDS 6102
DCA 6100
RDS 6102
DCA 6100
RDS 6102
DCA 6100

FIG. 42

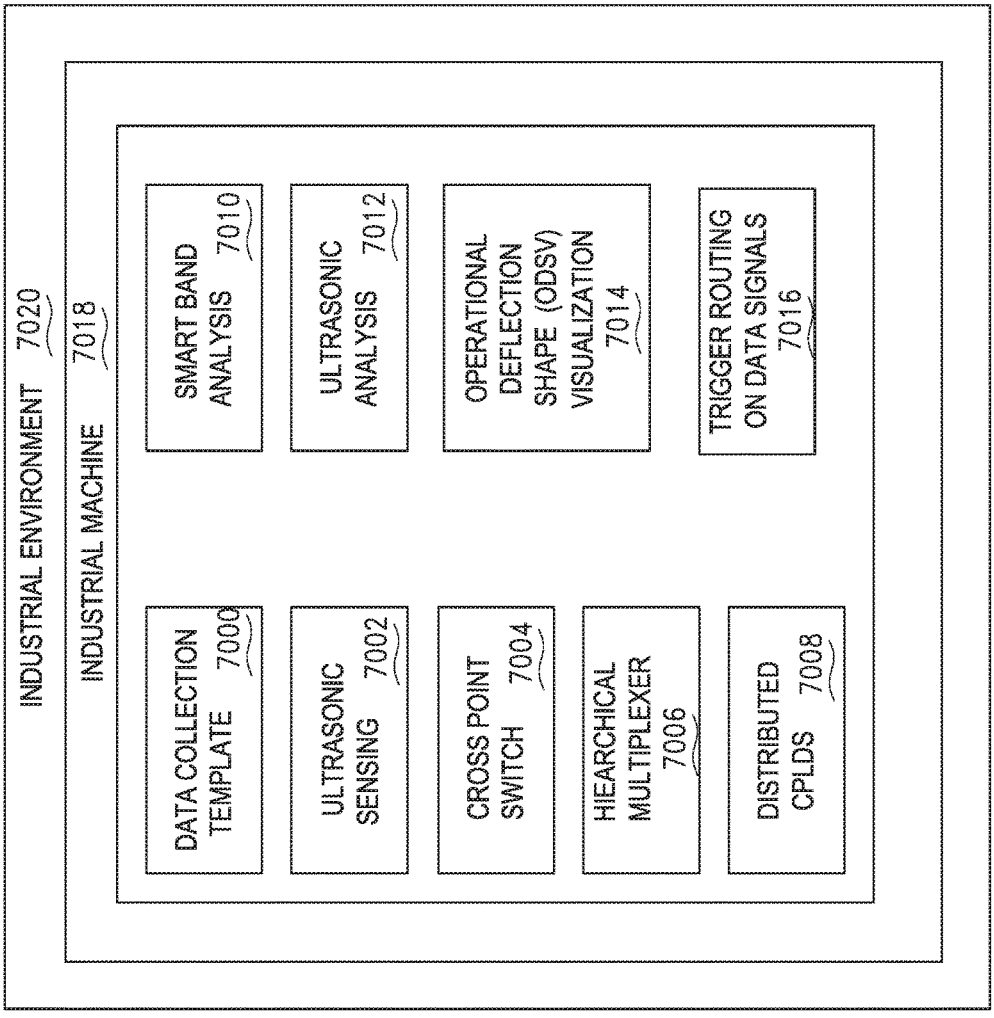
INDUSTRIAL ENVIRONMENT 7020
INDUSTRIAL MACHINE 7018
DATA COLLECTION TEMPLATE 7000
ULTRASONIC SENSING 7002
CROSS POINT SWITCH 7004
HIEARCHICAL MULTIPLEXER 7006
DISTRIBUTED CPLDS 7008
SMART BAND ANALYSIS 7010
ULTRASONIC ANALYSIS 7012
OPERATIONAL DEFLECTION SHAPE (ODSV) VISUALIZATION 7014
TRIGGER ROUTING ON DATA SIGNALS 7016

FIG. 43

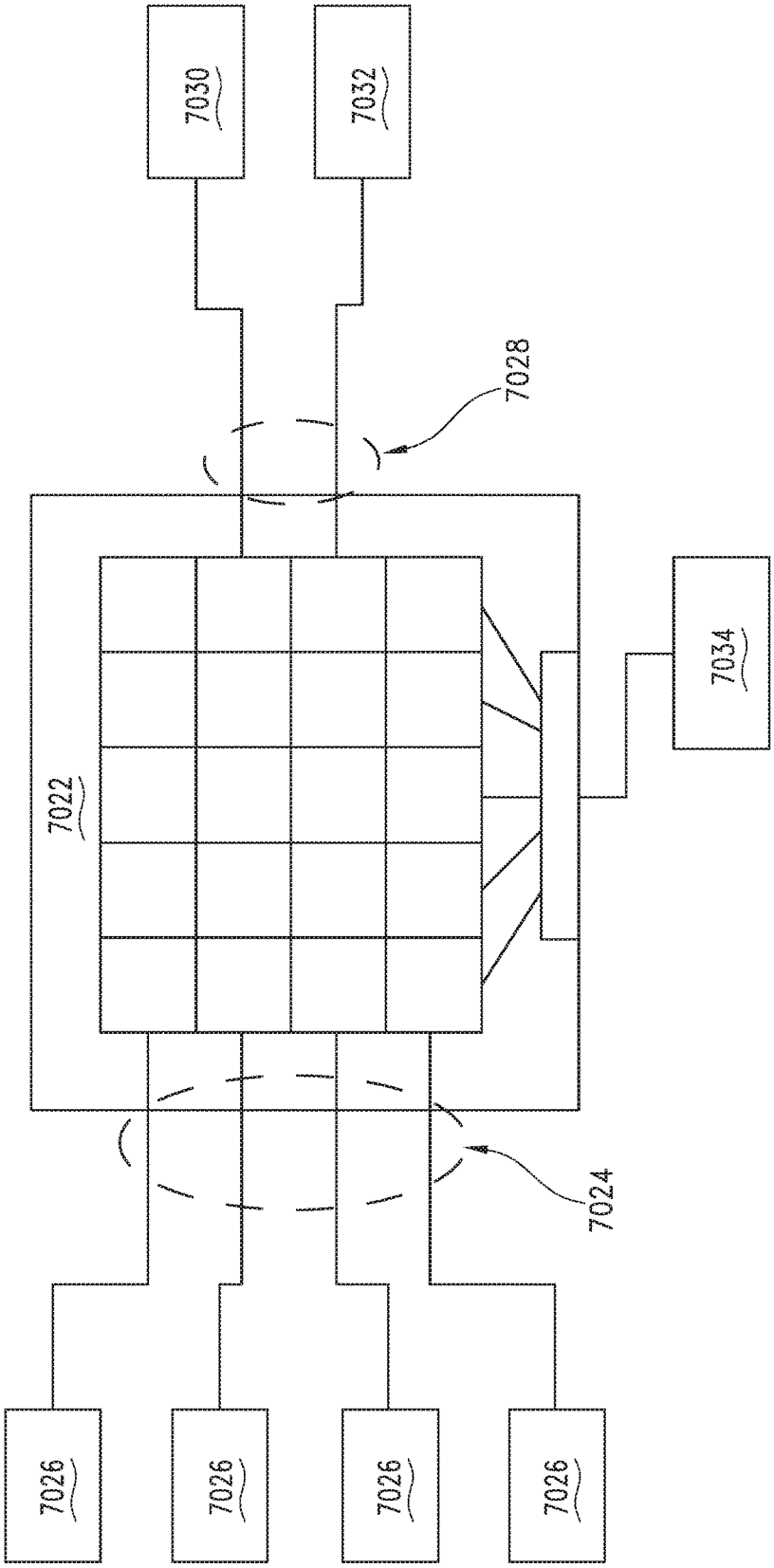


FIG. 44

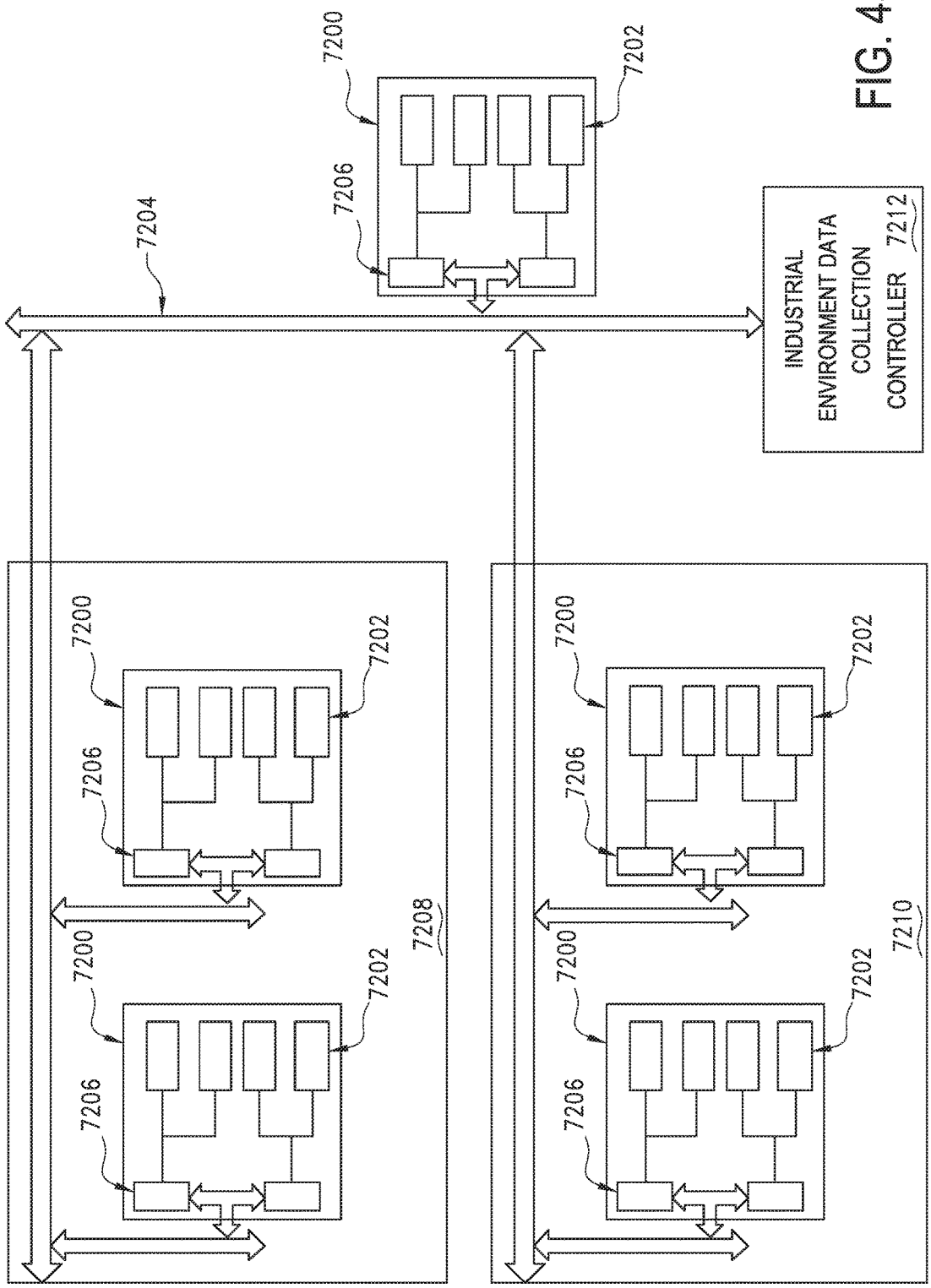
7200
7202
7206
7204
INDUSTRIAL ENVIRONMENT DATA COLLECTION CONTROLLER 7212
7208
7210

FIG. 45

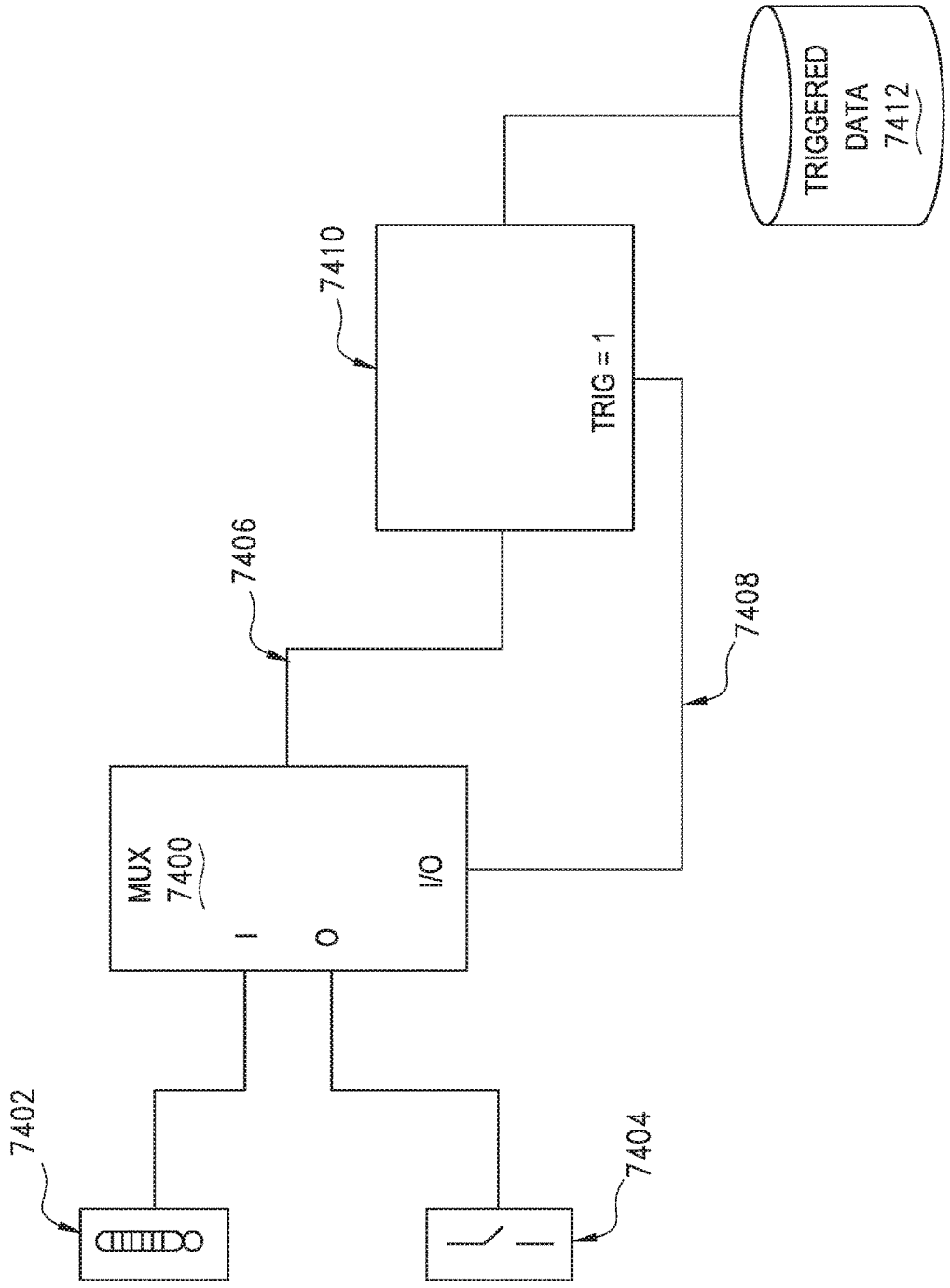
TRIGGERED DATA 7412
7410
TRIG = 1
7406
7408
MUX 7400
I
O
I/O
7402
7404

FIG. 46

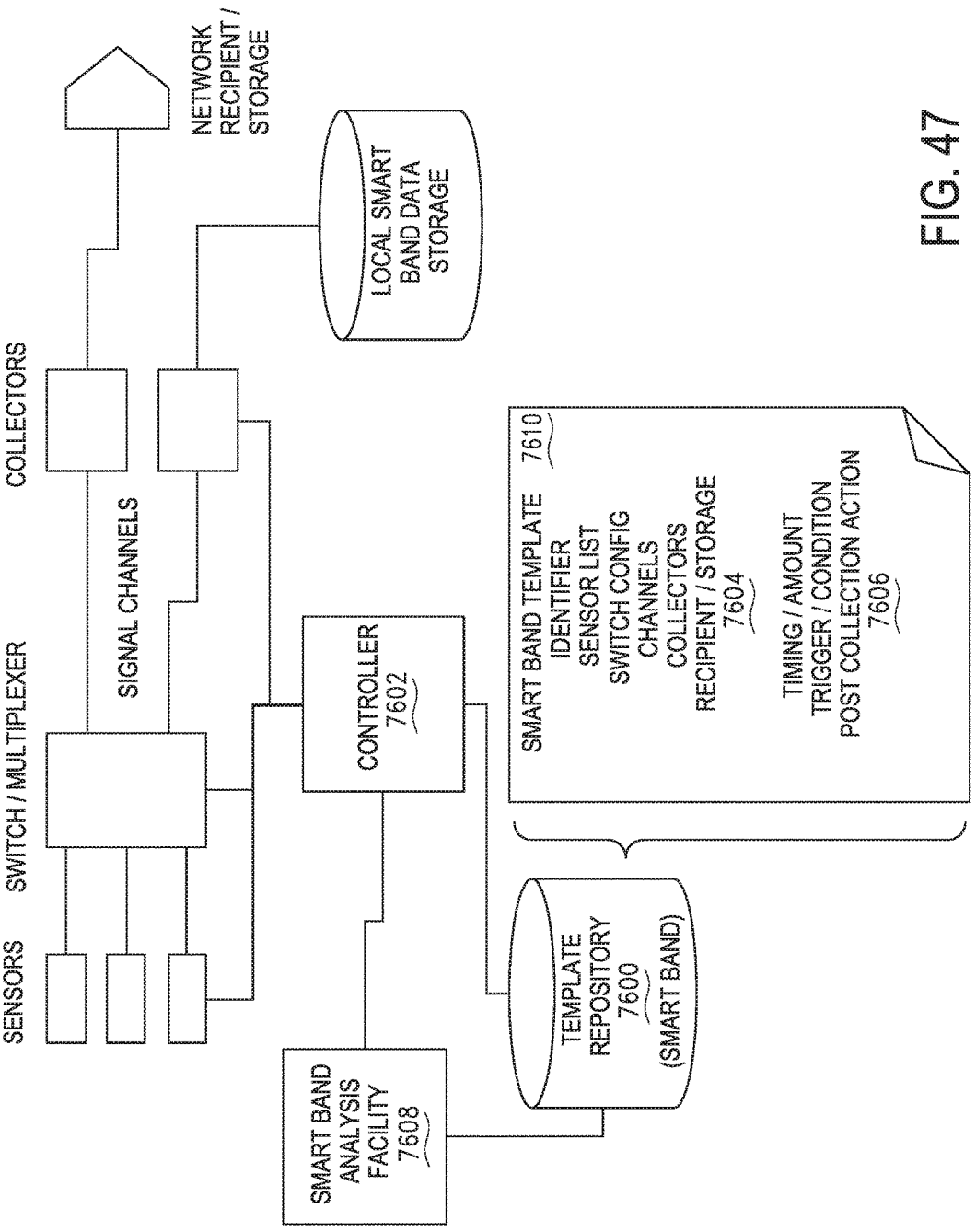
SENSORS
SWITCH / MULTIPLEXER
SIGNAL CHANNELS
COLLECTORS
NETWORK RECIPIENT / STORAGE
LOCAL SMART BAND DATA STORAGE
CONTROLLER 7602
SMART BAND ANALYSIS FACILITY 7608
TEMPLATE REPOSITORY 7600 (SMART BAND)
SMART BAND TEMPLATE 7610
IDENTIFIER
SENSOR LIST
SWITCH CONFIG
CHANNELS
COLLECTORS
RECIPIENT / STORAGE 7604
TIMING / AMOUNT
TRIGGER / CONDITION
POST COLLECTION ACTION 7606

FIG. 47

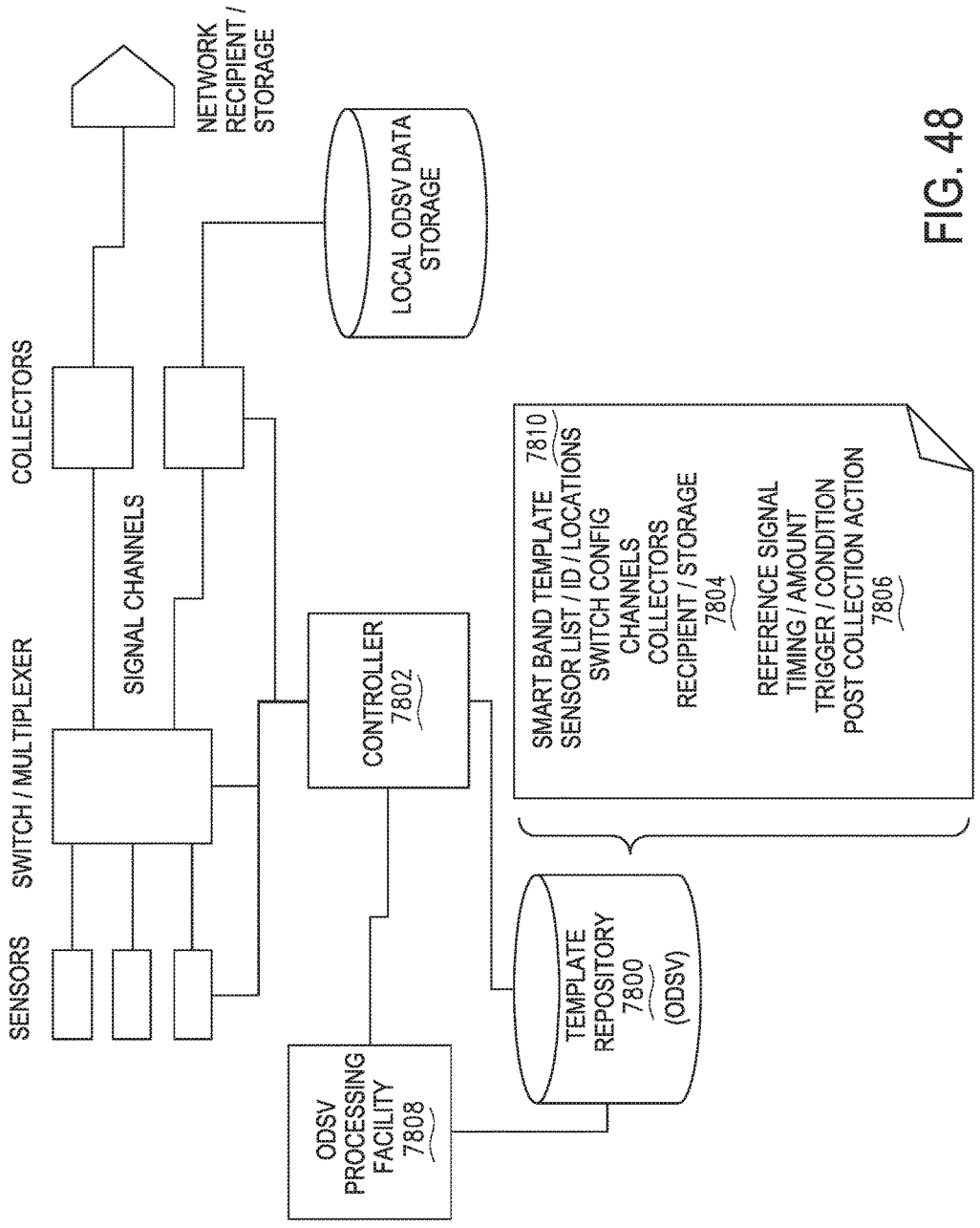
NETWORK RECIPIENT / STORAGE
LOCAL ODSV DATA STORAGE
COLLECTORS
SIGNAL CHANNELS
SWITCH / MULTIPLEXER
SENSORS
CONTROLLER 7802
SMART BAND TEMPLATE 7810
SENSOR LIST / ID / LOCATIONS
SWITCH CONFIG
CHANNELS
COLLECTORS
RECIPIENT / STORAGE 7804
REFERENCE SIGNAL
TIMING / AMOUNT
TRIGGER / CONDITION
POST COLLECTION ACTION 7806
TEMPLATE REPOSITORY 7800 (ODSV)
ODSV PROCESSING FACILITY 7808

FIG. 48

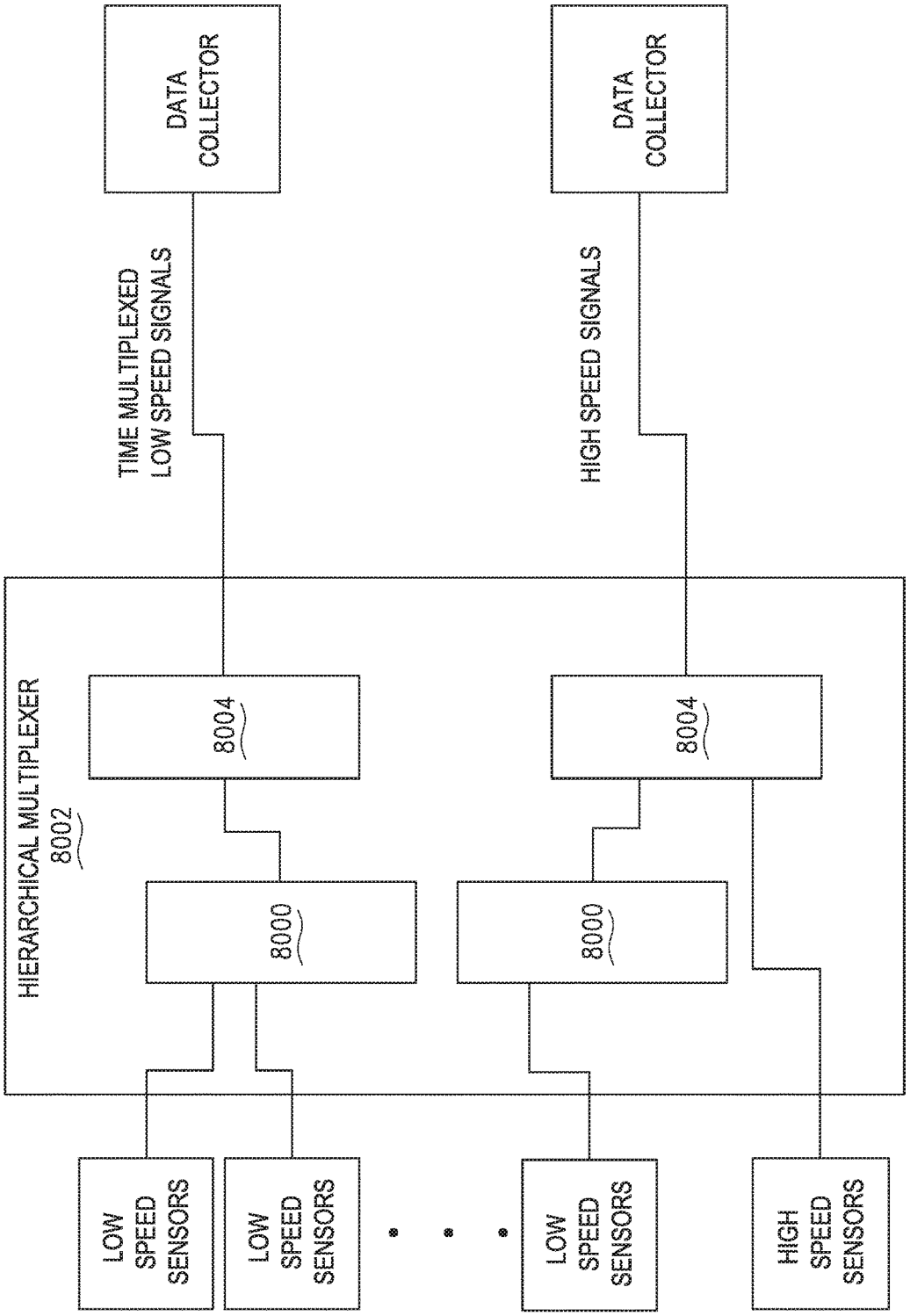
DATA COLLECTOR
DATA COLLECTOR
TIME MULTIPLEXED LOW SPEED SIGNALS
HIGH SPEED SIGNALS
HIERARCHICAL MULTIPLEXER
8002
8004
8004
8000
8000
LOW SPEED SENSORS
LOW SPEED SENSORS
LOW SPEED SENSORS
HIGH SPEED SENSORS

FIG. 49

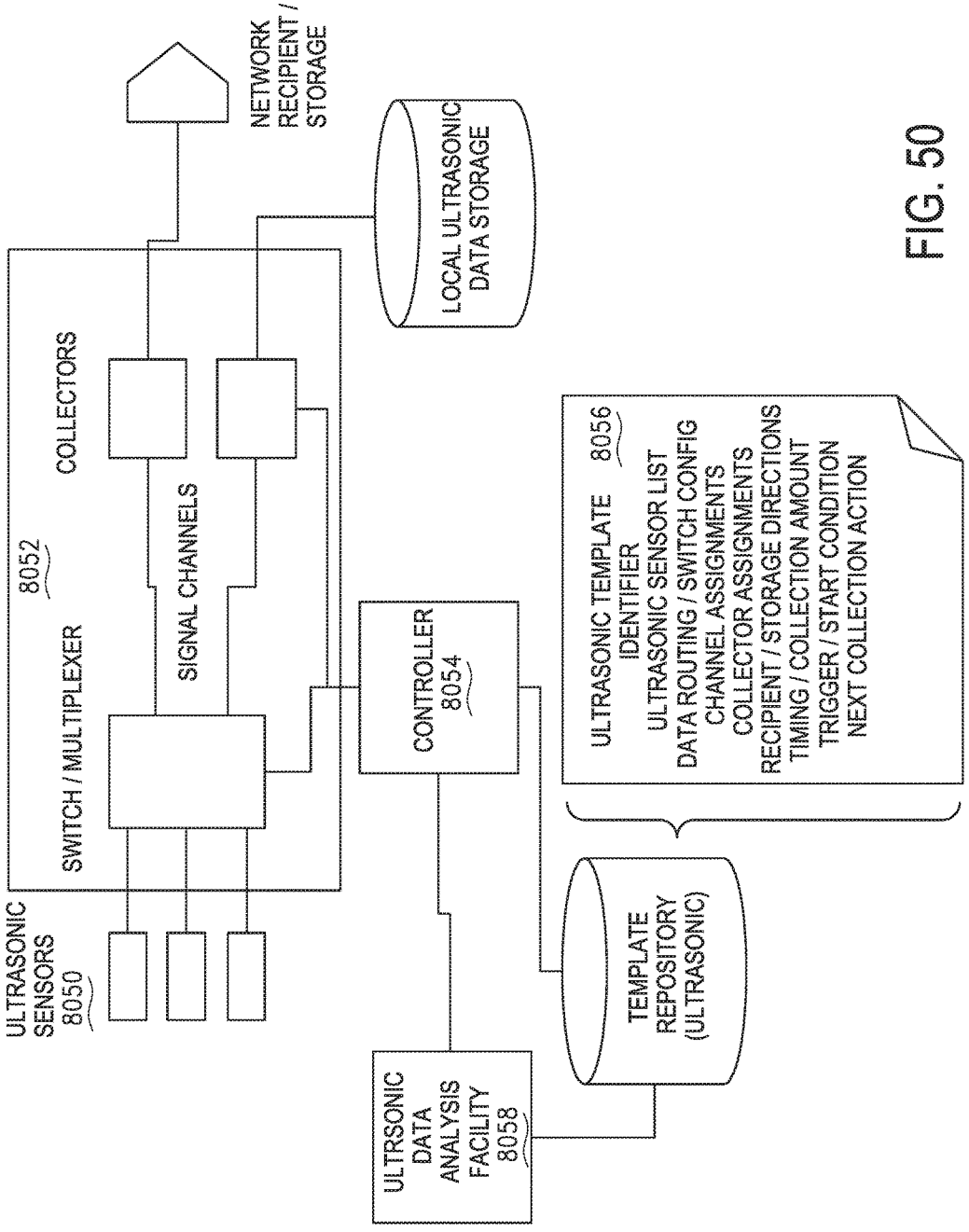
NETWORK RECIPIENT / STORAGE
LOCAL ULTRASONIC DATA STORAGE
COLLECTORS
8052
SWITCH / MULTIPLEXER
SIGNAL CHANNELS
CONTROLLER 8054
ULTRASONIC TEMPLATE 8056
IDENTIFIER
ULTRASONIC SENSOR LIST
DATA ROUTING / SWITCH CONFIG
CHANNEL ASSIGNMENTS
COLLECTOR ASSIGNMENTS
RECIPIENT / STORAGE DIRECTIONS
TIMING / COLLECTION AMOUNT
TRIGGER / START CONDITION
NEXT COLLECTION ACTION
ULTRASONIC SENSORS 8050
TEMPLATE REPOSITORY (ULTRASONIC)
ULTRSONIC DATA ANALYSIS FACILITY 8058

FIG. 50

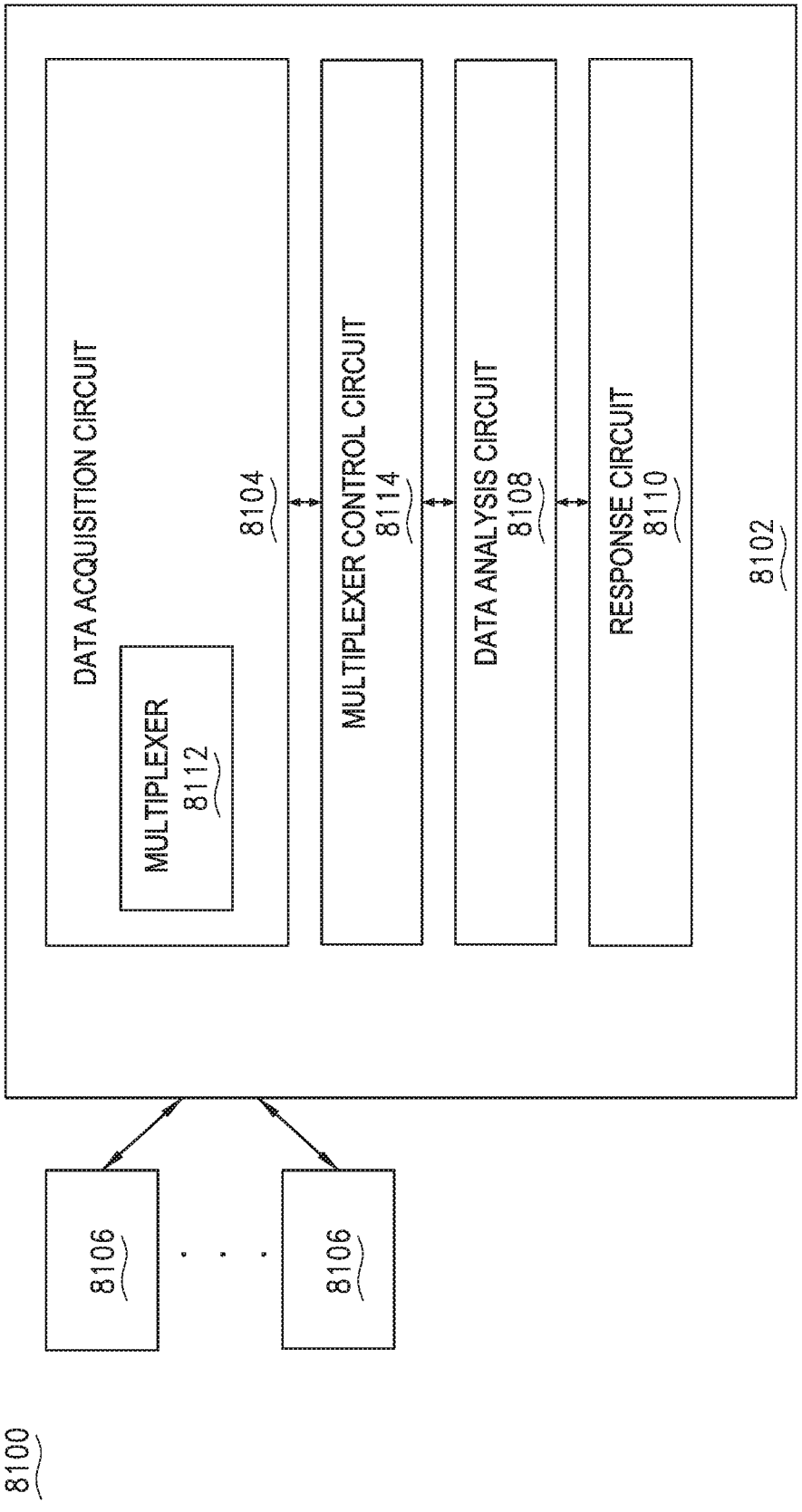
8100
8106
8106
8102
DATA ACQUISITION CIRCUIT
MULTIPLEXER
8112
8104
MULTIPLEXER CONTROL CIRCUIT
8114
DATA ANALYSIS CIRCUIT
8108
RESPONSE CIRCUIT
8110

FIG. 51

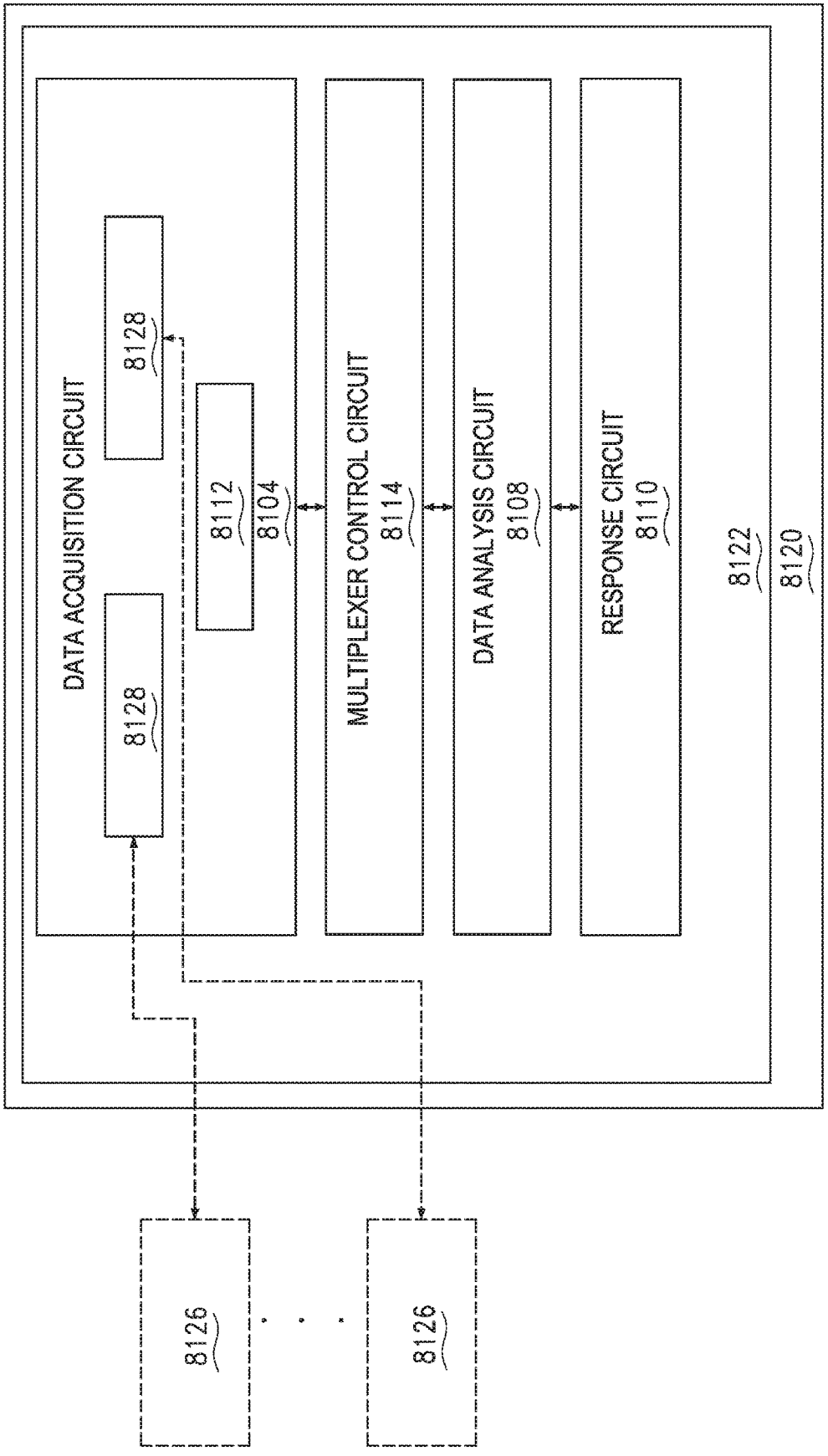
DATA ACQUISITION CIRCUIT
8128
8128
8112
8104
MULTIPLEXER CONTROL CIRCUIT
8114
DATA ANALYSIS CIRCUIT
8108
RESPONSE CIRCUIT
8110
8122
8120
8126
8126

FIG. 52

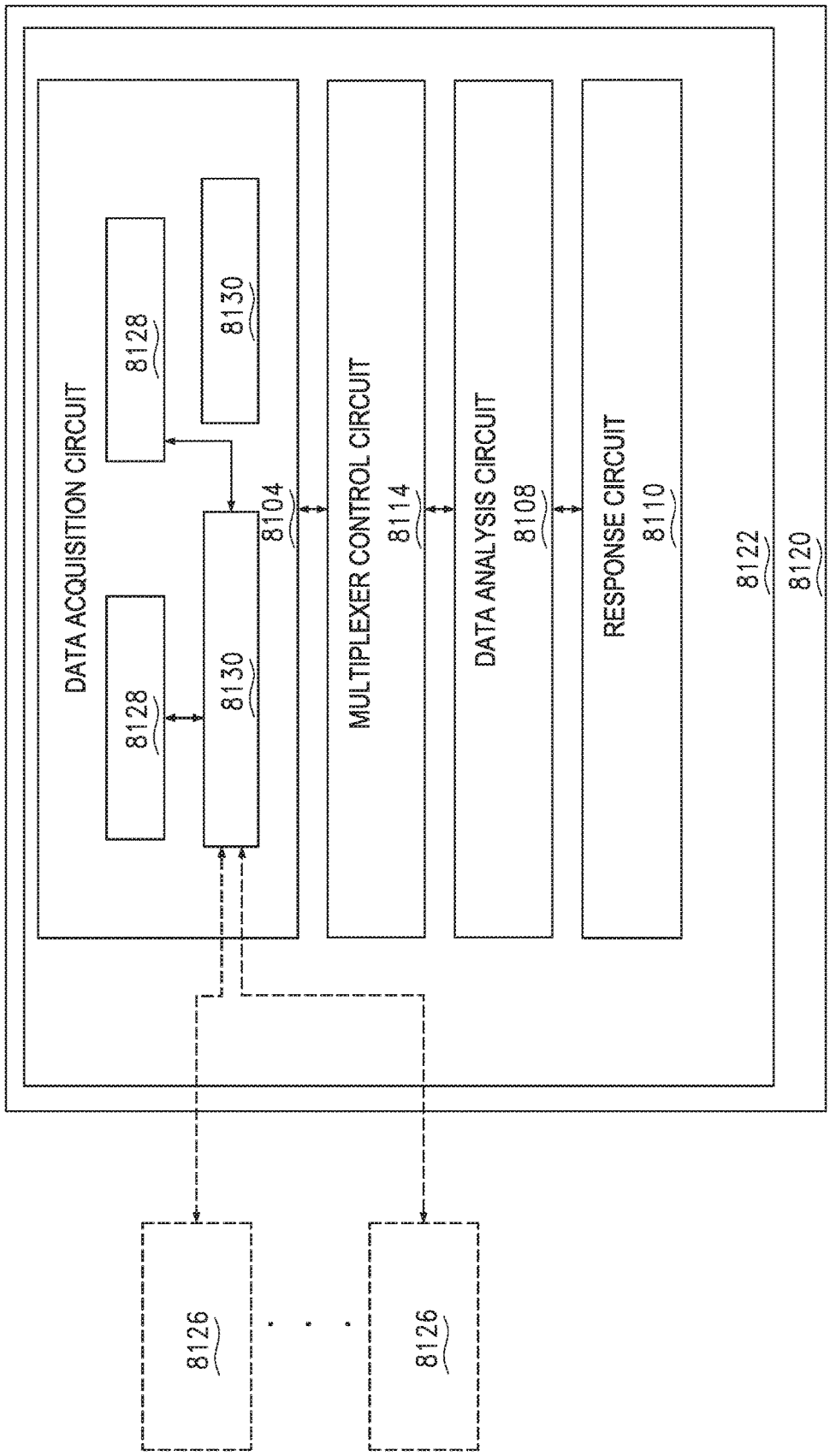
DATA ACQUISITION CIRCUIT
8128
8130
8104
8128
8130
MULTIPLEXER CONTROL CIRCUIT
8114
DATA ANALYSIS CIRCUIT
8108
RESPONSE CIRCUIT
8110
8122
8120
8126
8126

FIG. 53

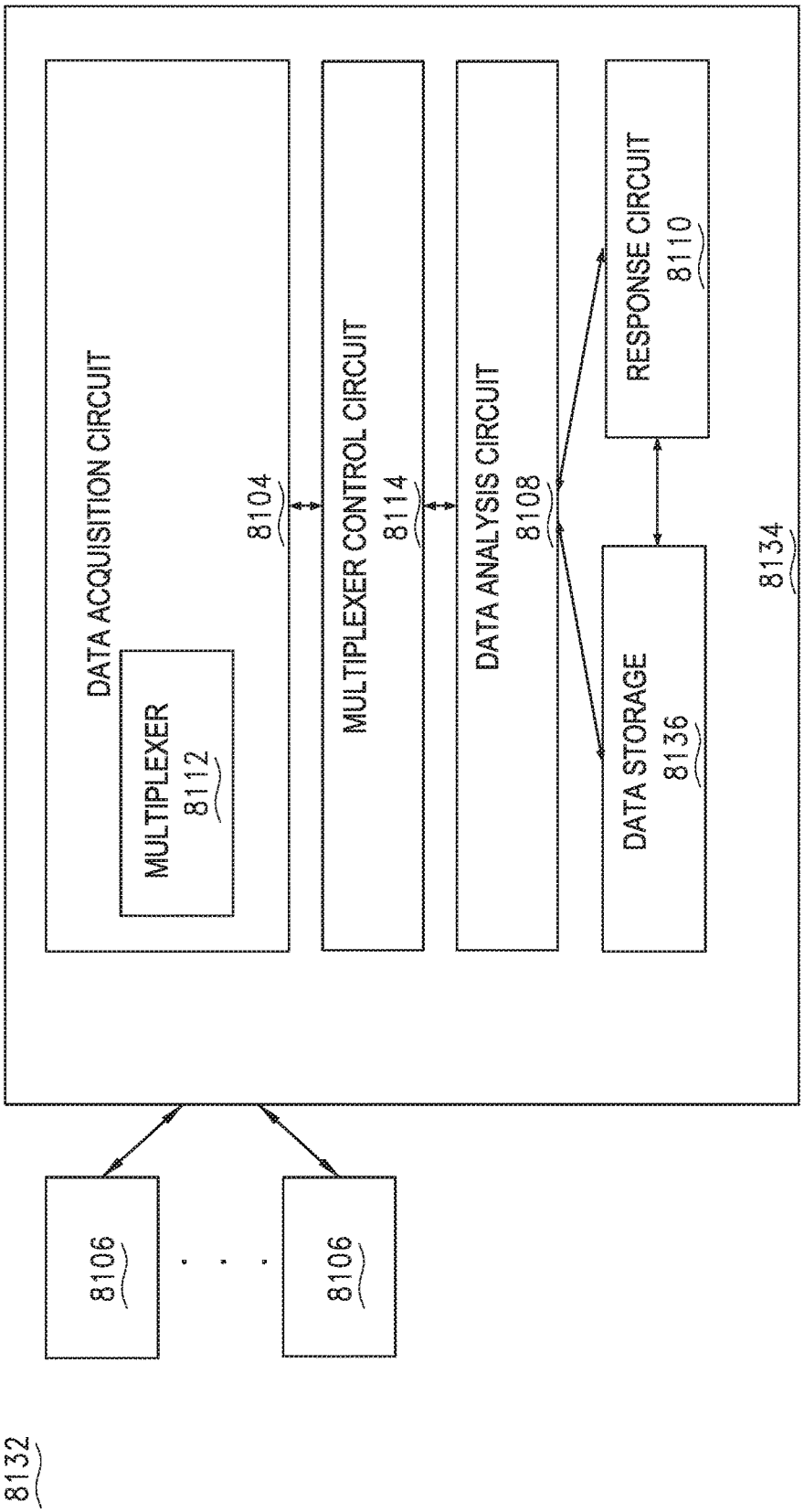
8132
8106
8106
8134
DATA ACQUISITION CIRCUIT
MULTIPLEXER
8112
8104
MULTIPLEXER CONTROL CIRCUIT
8114
DATA ANALYSIS CIRCUIT
8108
RESPONSE CIRCUIT
8110
DATA STORAGE
8136

FIG. 54

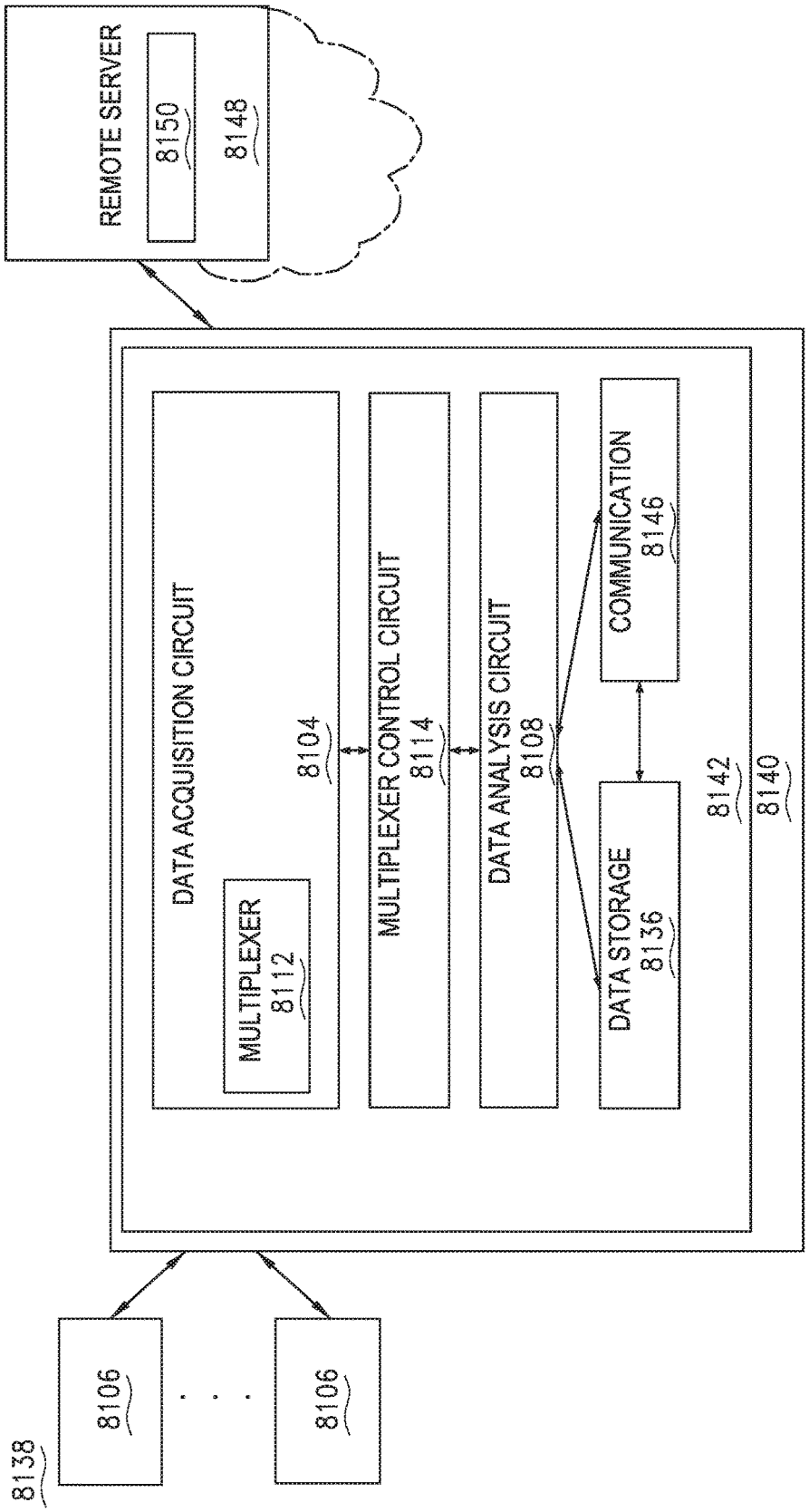
REMOTE SERVER
8150
8148
DATA ACQUISITION CIRCUIT
MULTIPLEXER
8112
8104
MULTIPLEXER CONTROL CIRCUIT
8114
DATA ANALYSIS CIRCUIT
8108
COMMUNICATION
8146
DATA STORAGE
8136
8142
8140
8138
8106
8106

FIG. 55

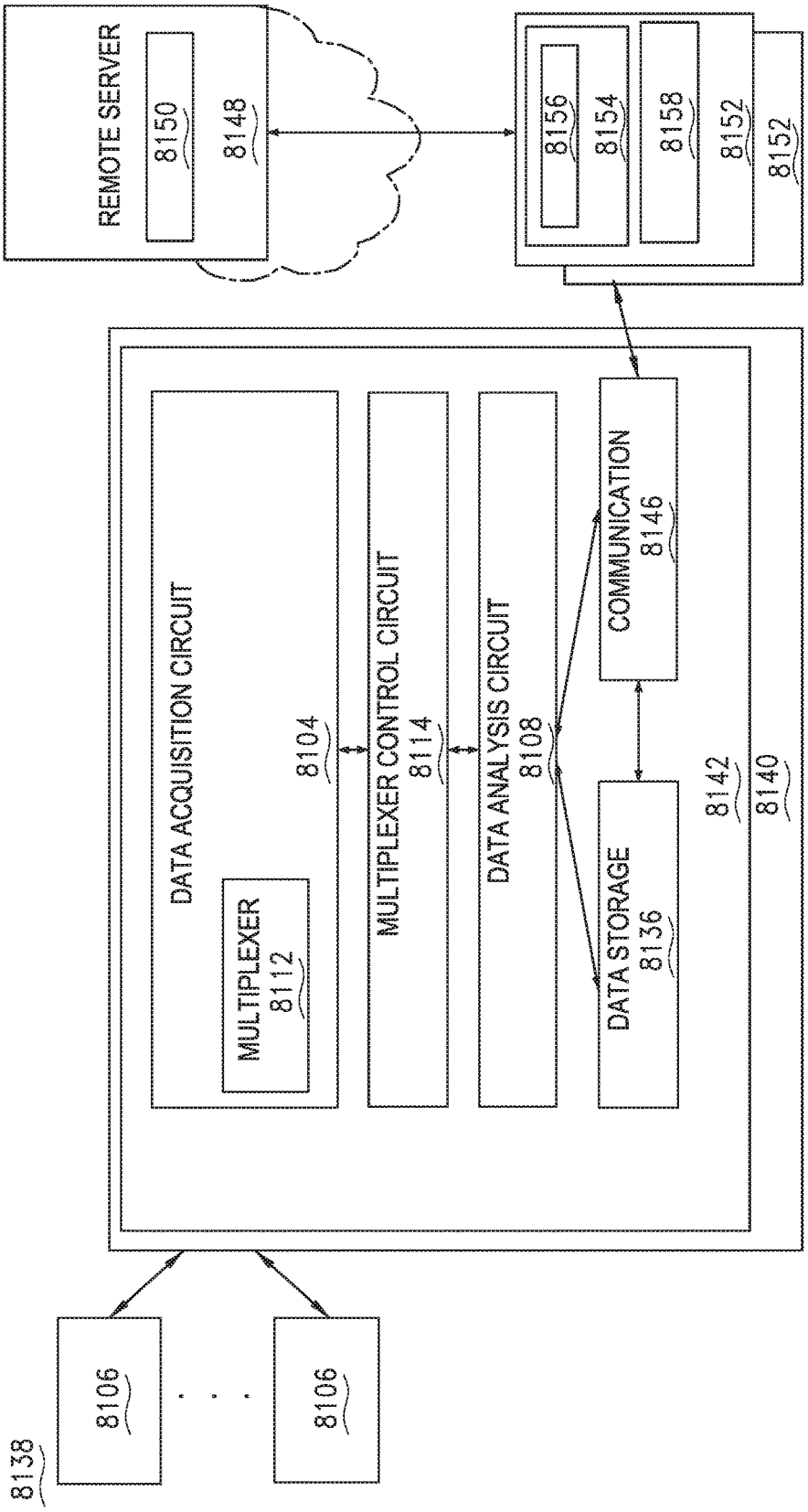
REMOTE SERVER
8150
8148
8156
8154
8158
8152
8152
DATA ACQUISITION CIRCUIT
MULTIPLEXER
8112
8104
MULTIPLEXER CONTROL CIRCUIT
8114
DATA ANALYSIS CIRCUIT
8108
COMMUNICATION
8146
DATA STORAGE
8136
8142
8140
8138
8106
8106

FIG. 56

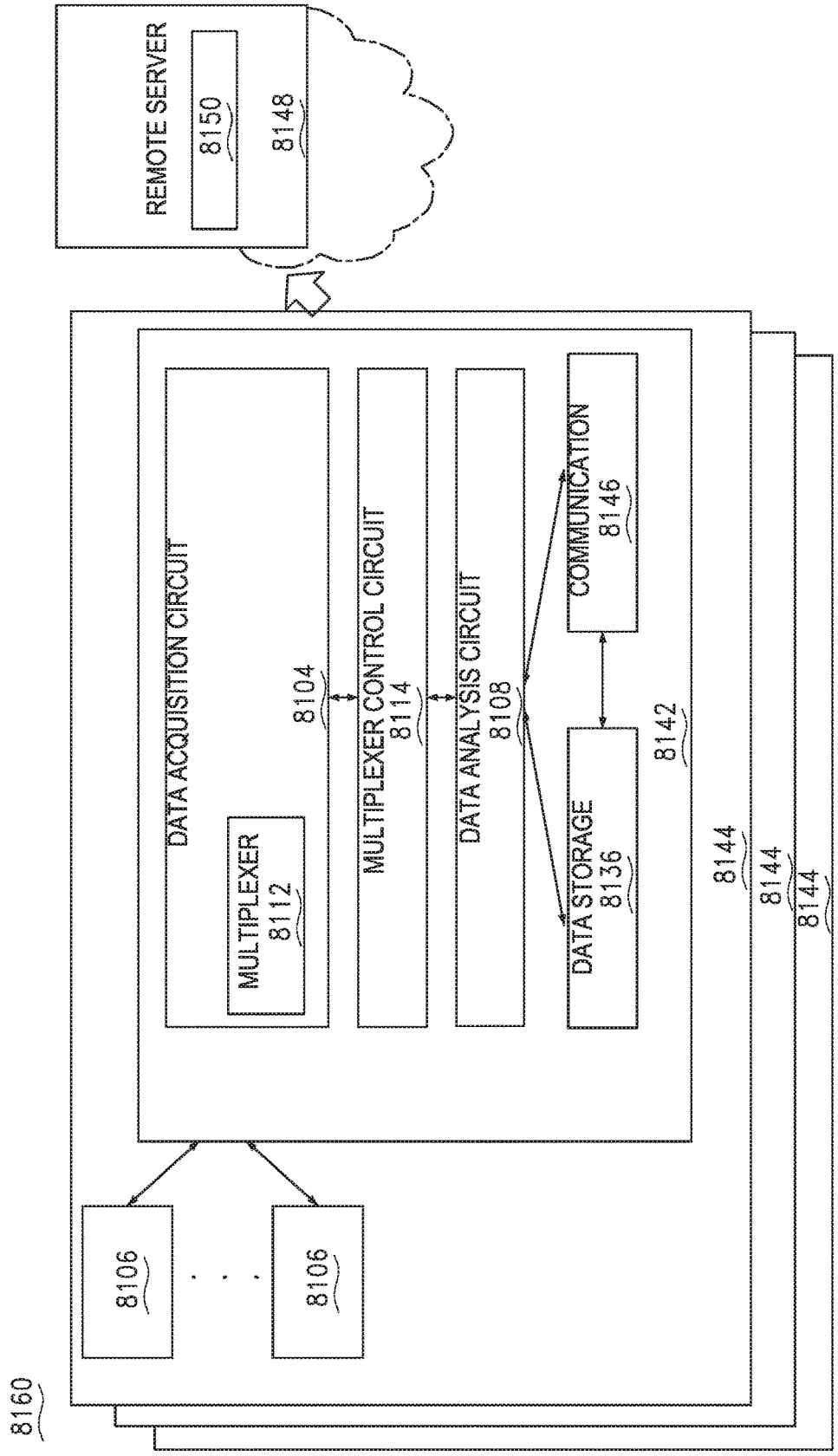
REMOTE SERVER
8150
8148
8160
8106
8106
DATA ACQUISITION CIRCUIT
MULTIPLEXER
8112
8104
MULTIPLEXER CONTROL CIRCUIT
8114
DATA ANALYSIS CIRCUIT
8108
COMMUNICATION
8146
DATA STORAGE
8136
8142
8144
8144
8144

FIG. 57

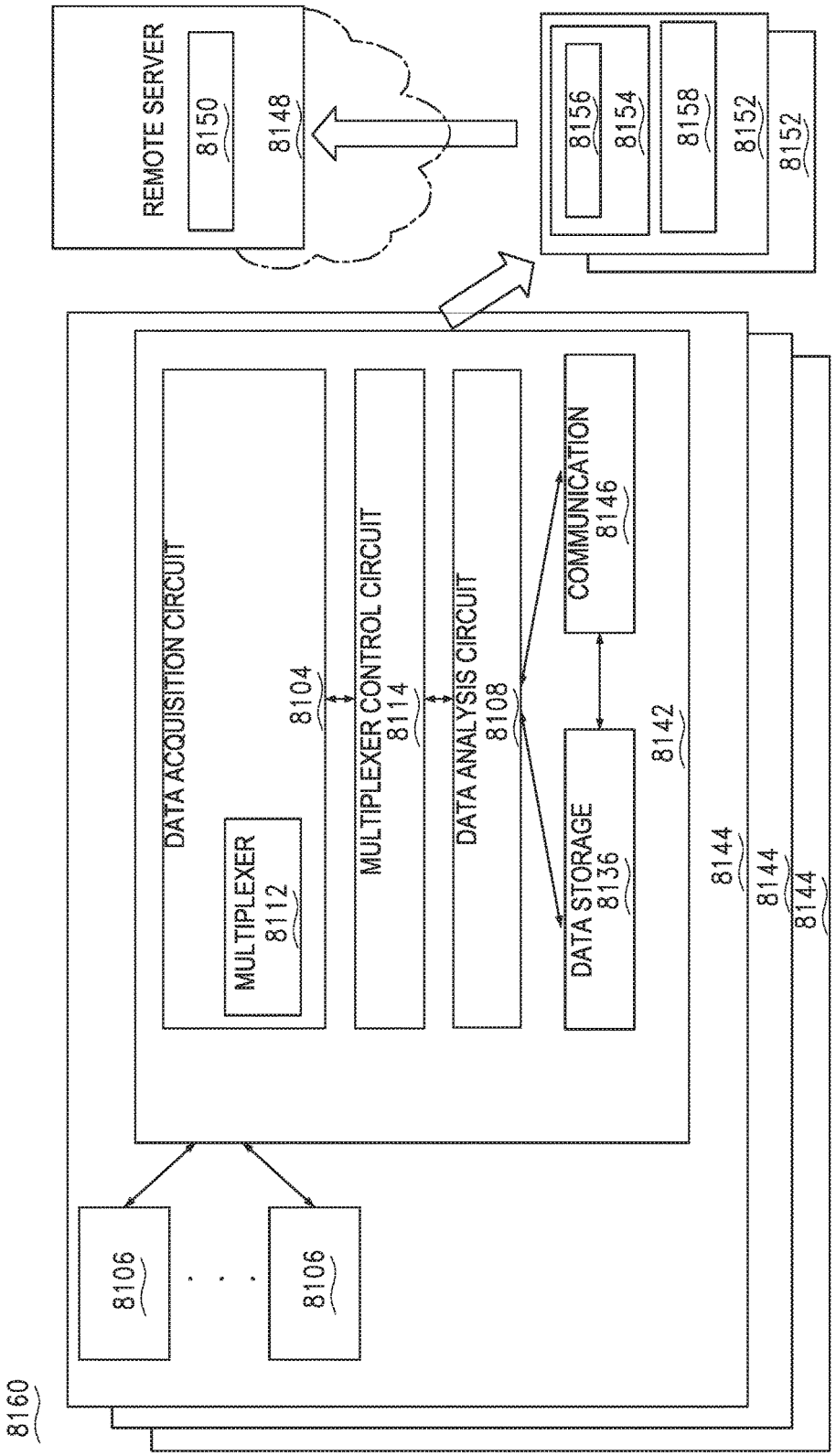
REMOTE SERVER
8150
8148
8156
8154
8158
8152
8152
8160
8106
8106
DATA ACQUISITION CIRCUIT
MULTIPLEXER
8112
8104
MULTIPLEXER CONTROL CIRCUIT
8114
DATA ANALYSIS CIRCUIT
8108
COMMUNICATION
8146
DATA STORAGE
8136
8142
8144
8144
8144

FIG. 58

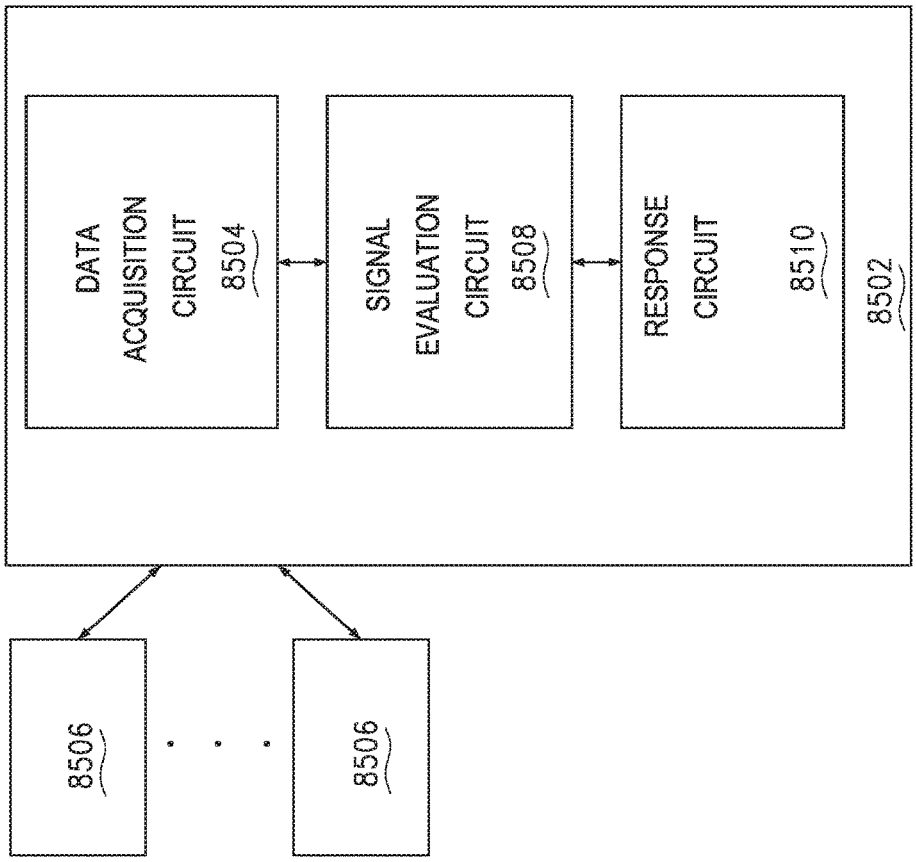
DATA ACQUISITION CIRCUIT 8504
SIGNAL EVALUATION CIRCUIT 8508
RESPONSE CIRCUIT 8510
8502
8506
8506
8500

FIG. 59

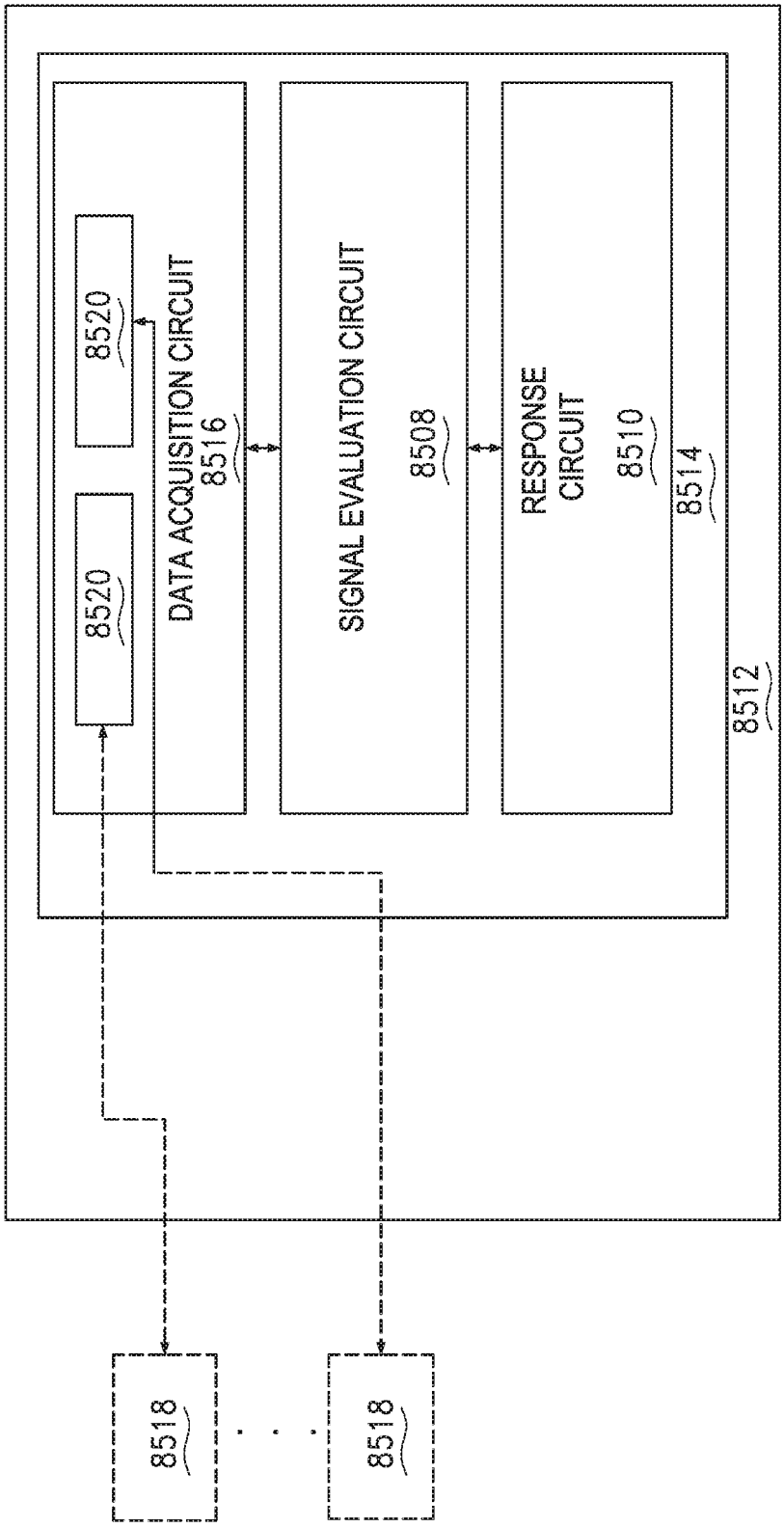
8520
8520
DATA ACQUISITION CIRCUIT
8516
SIGNAL EVALUATION CIRCUIT
8508
RESPONSE CIRCUIT
8510
8514
8512
8518
8518

FIG. 60

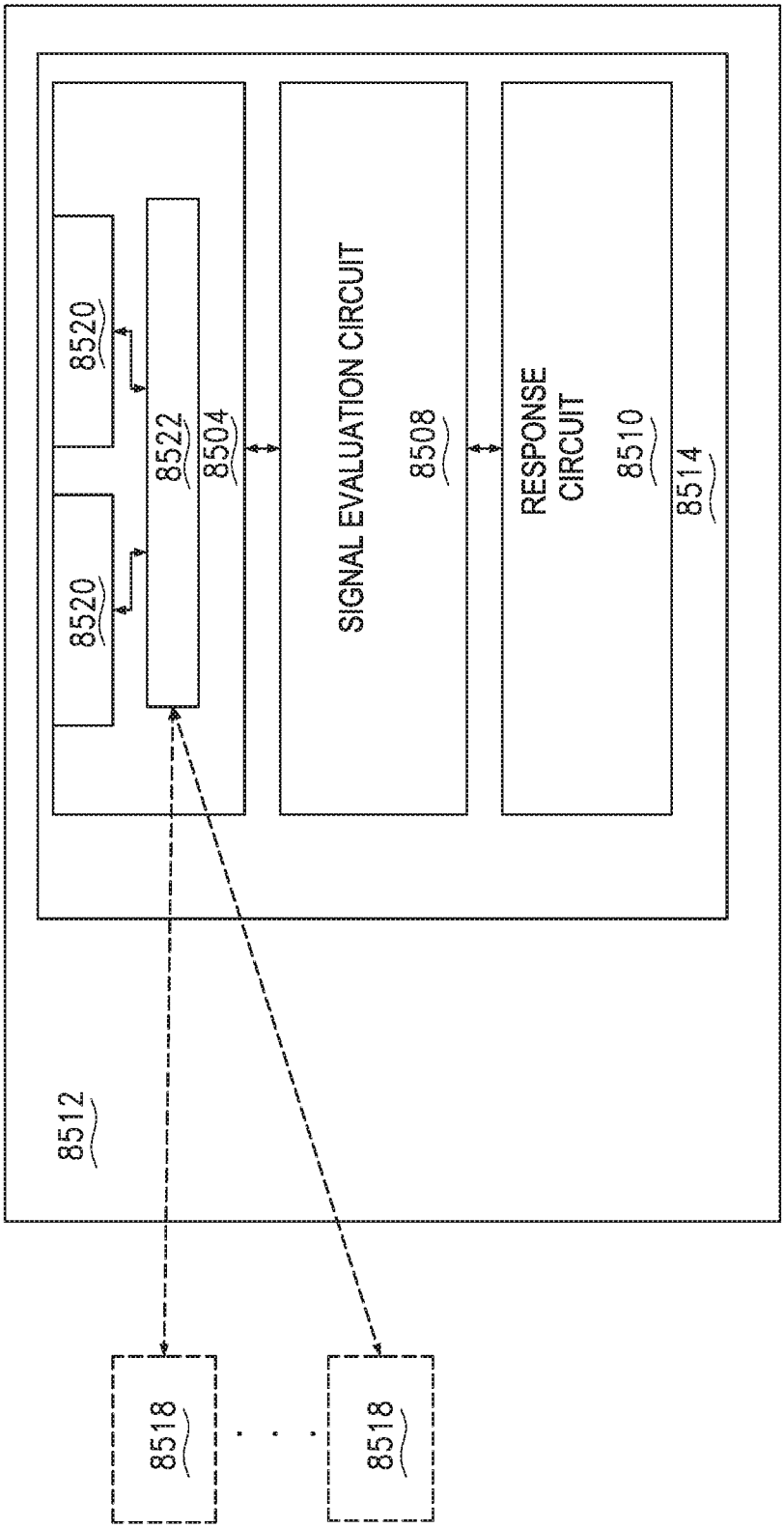
8512
8520
8520
8522
8504
SIGNAL EVALUATION CIRCUIT
8508
RESPONSE CIRCUIT
8510
8514
8518
8518

FIG. 61

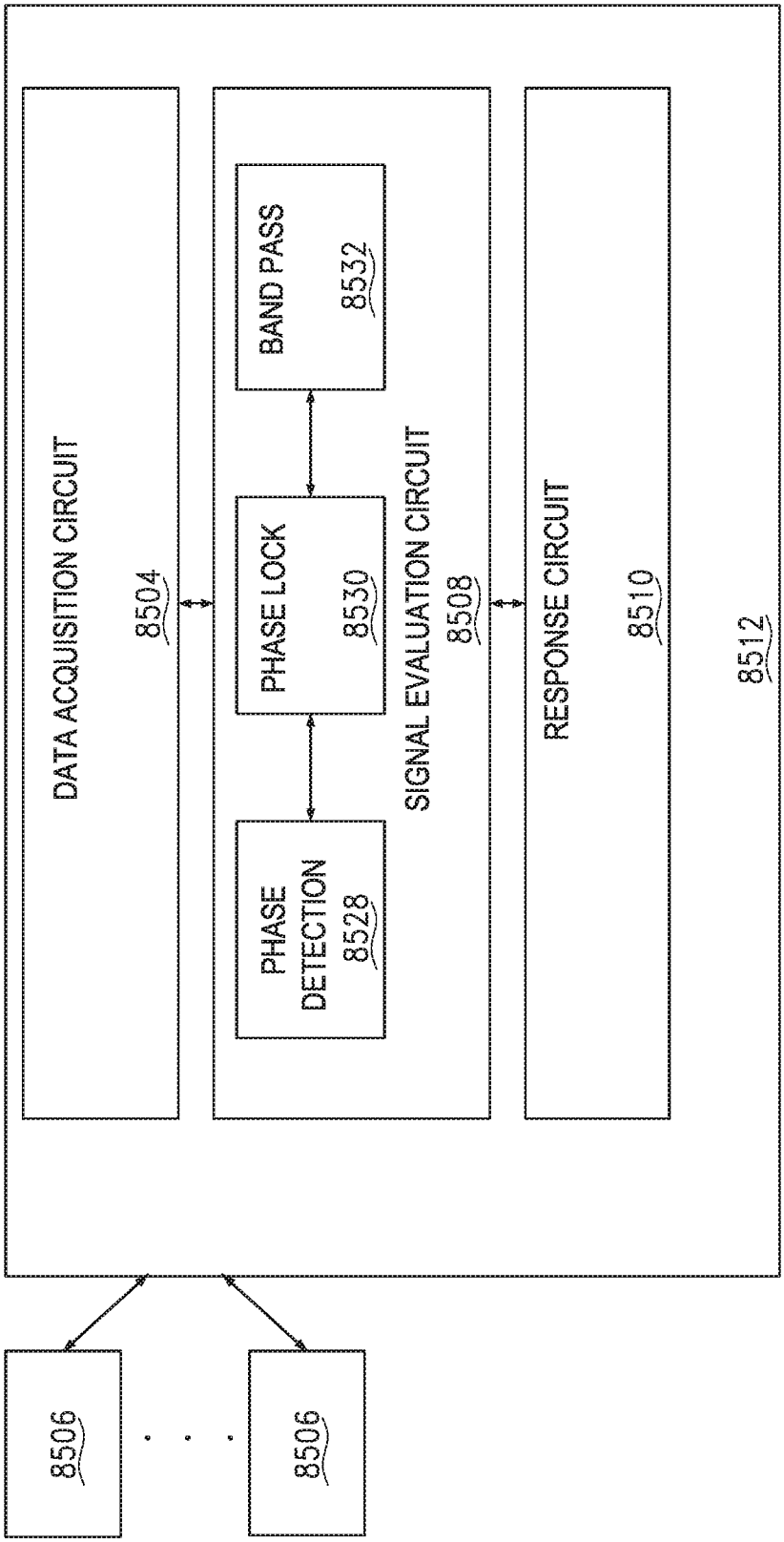
8506
8506
8512
DATA ACQUISITION CIRCUIT
8504
SIGNAL EVALUATION CIRCUIT
8508
PHASE DETECTION
8528
PHASE LOCK
8530
BAND PASS
8532
RESPONSE CIRCUIT
8510

FIG. 62

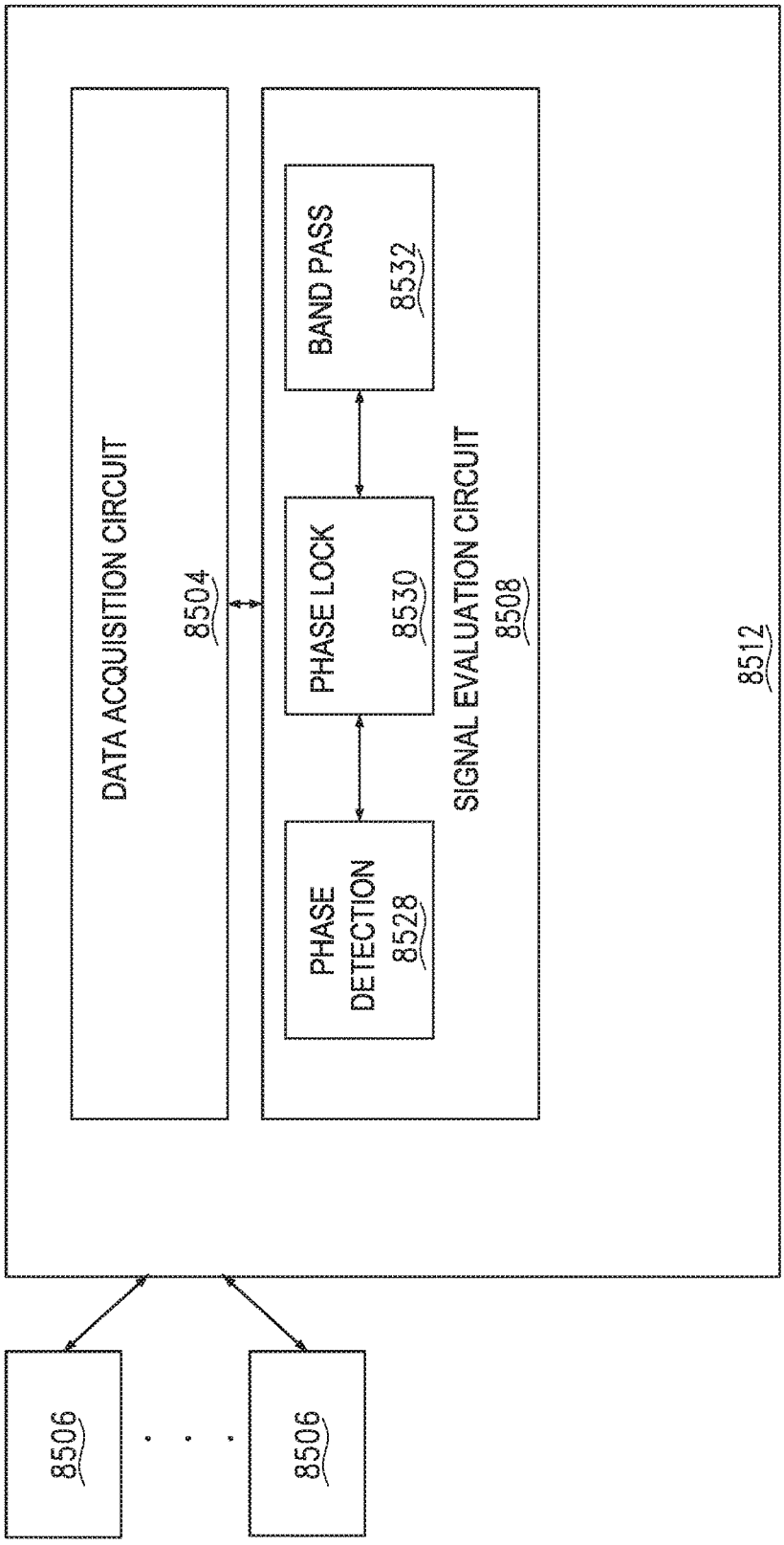
8506
8506
8512
DATA ACQUISITION CIRCUIT
8504
SIGNAL EVALUATION CIRCUIT
8508
PHASE DETECTION
8528
PHASE LOCK
8530
BAND PASS
8532

FIG. 63

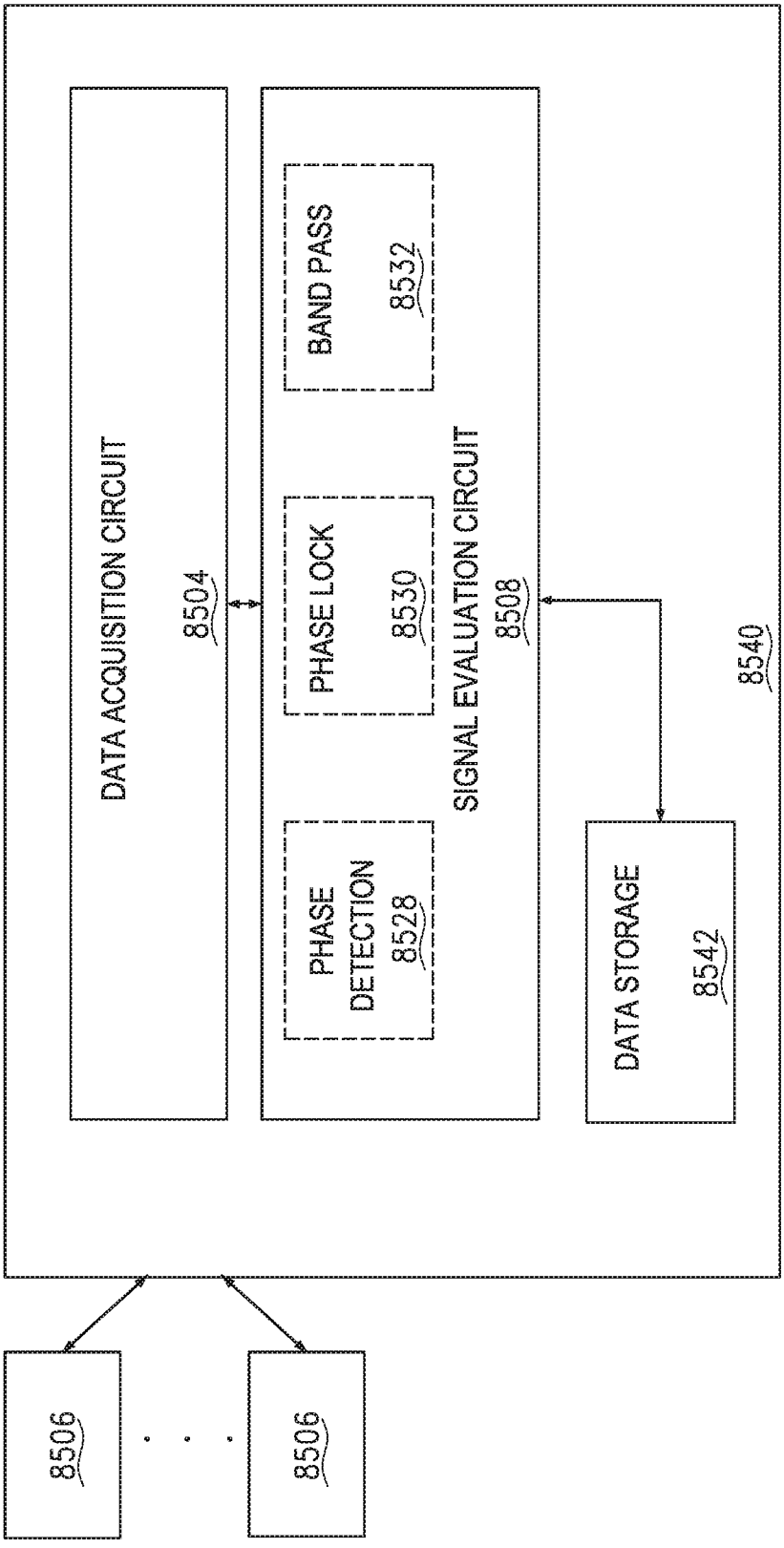
DATA ACQUISITION CIRCUIT
8504
SIGNAL EVALUATION CIRCUIT
8508
BAND PASS
8532
PHASE LOCK
8530
PHASE DETECTION
8528
DATA STORAGE
8542
8540
8506
8506

FIG. 64

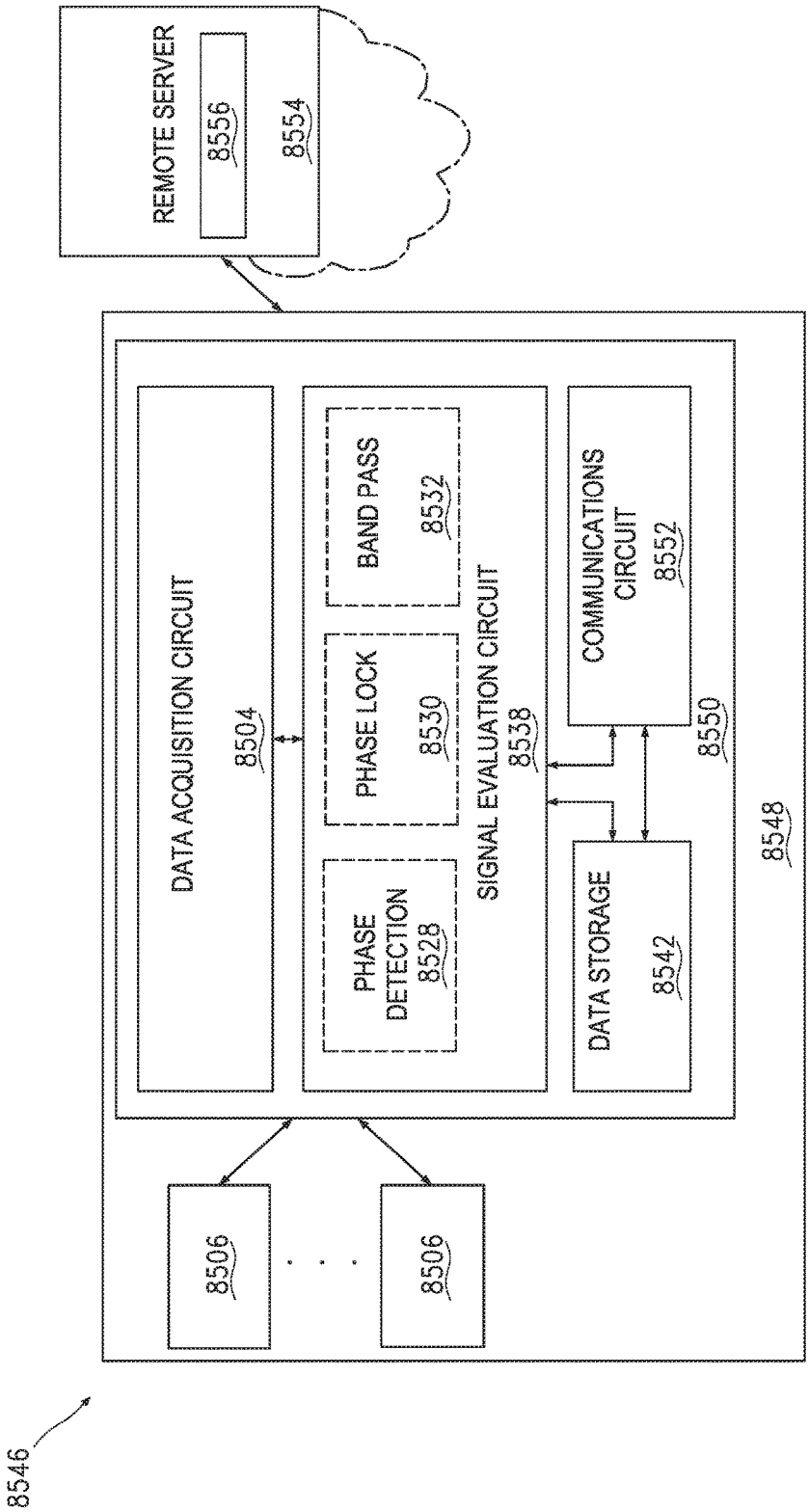
REMOTE SERVER
8556
8554
DATA ACQUISITION CIRCUIT
8504
PHASE DETECTION
8528
PHASE LOCK
8530
BAND PASS
8532
SIGNAL EVALUATION CIRCUIT
8538
COMMUNICATIONS CIRCUIT
8552
8550
DATA STORAGE
8542
8548
8506
8506
8546

FIG. 65

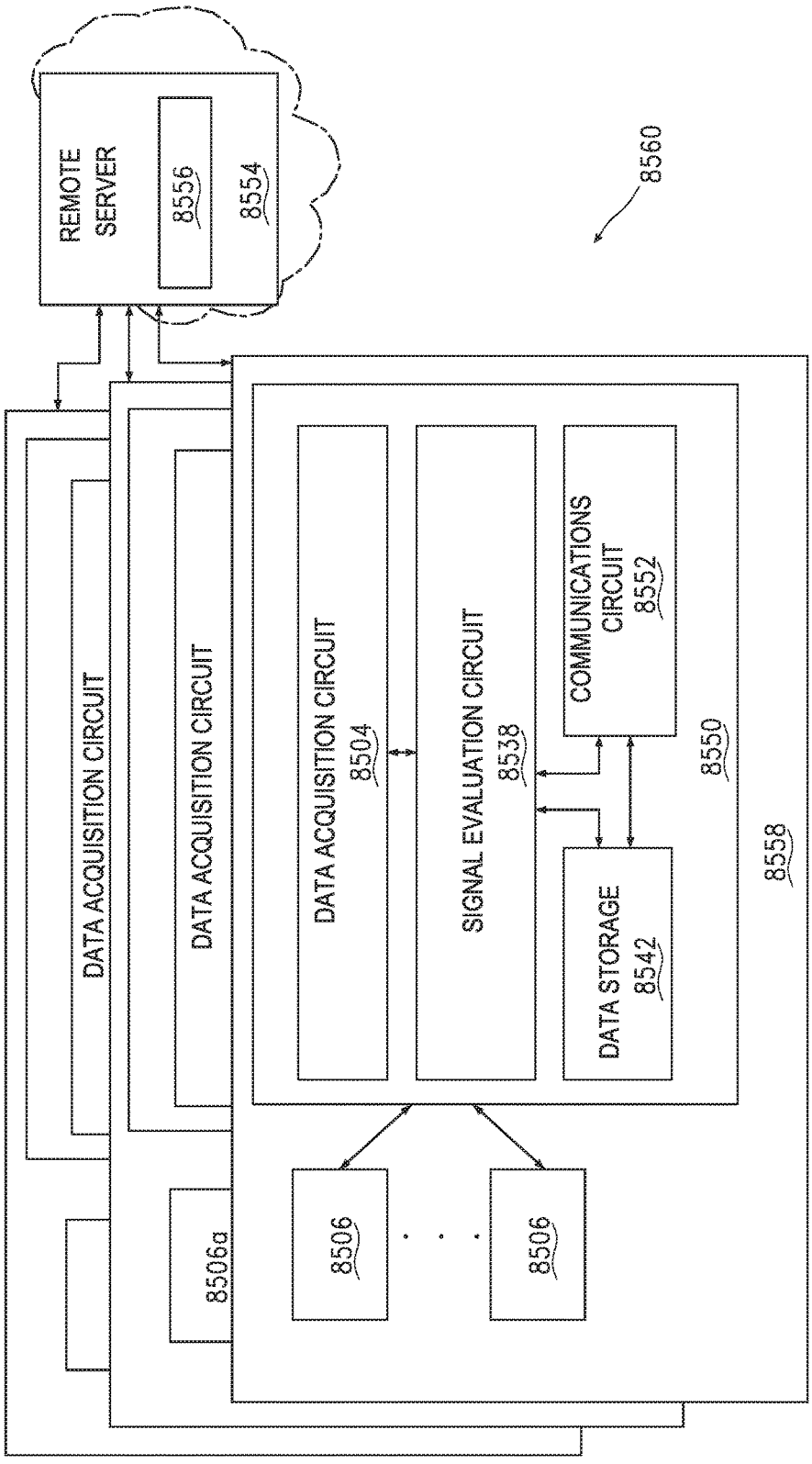
REMOTE SERVER
8556
8554
8560
DATA ACQUISITION CIRCUIT
DATA ACQUISITION CIRCUIT
DATA ACQUISITION CIRCUIT
8504
SIGNAL EVALUATION CIRCUIT
8538
COMMUNICATIONS CIRCUIT
8552
DATA STORAGE
8542
8550
8558
8506a
8506
8506

FIG. 66

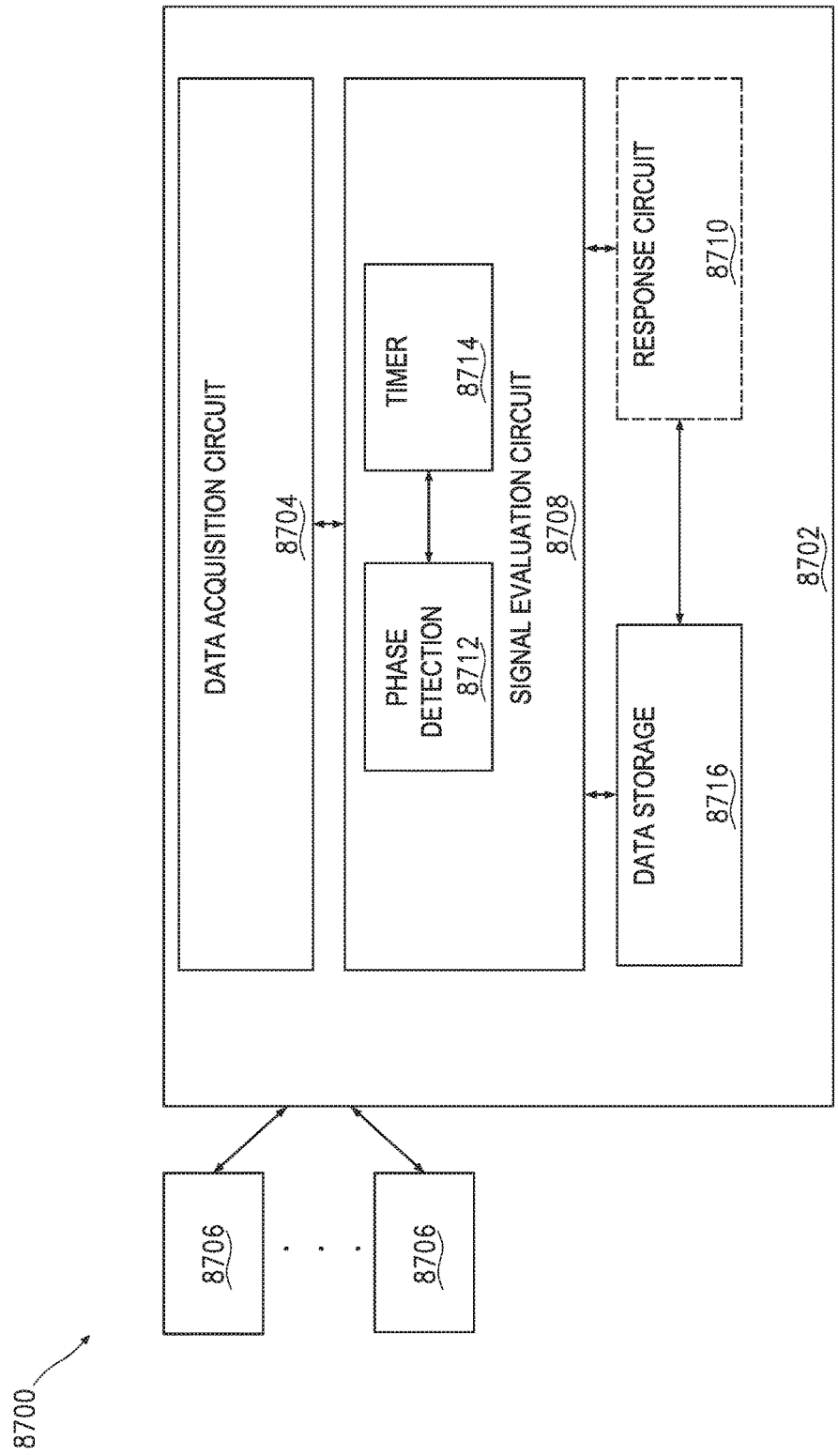
8700
8706
8706
8702
DATA ACQUISITION CIRCUIT
8704
SIGNAL EVALUATION CIRCUIT
8708
PHASE DETECTION
8712
TIMER
8714
RESPONSE CIRCUIT
8710
DATA STORAGE
8716

FIG. 67

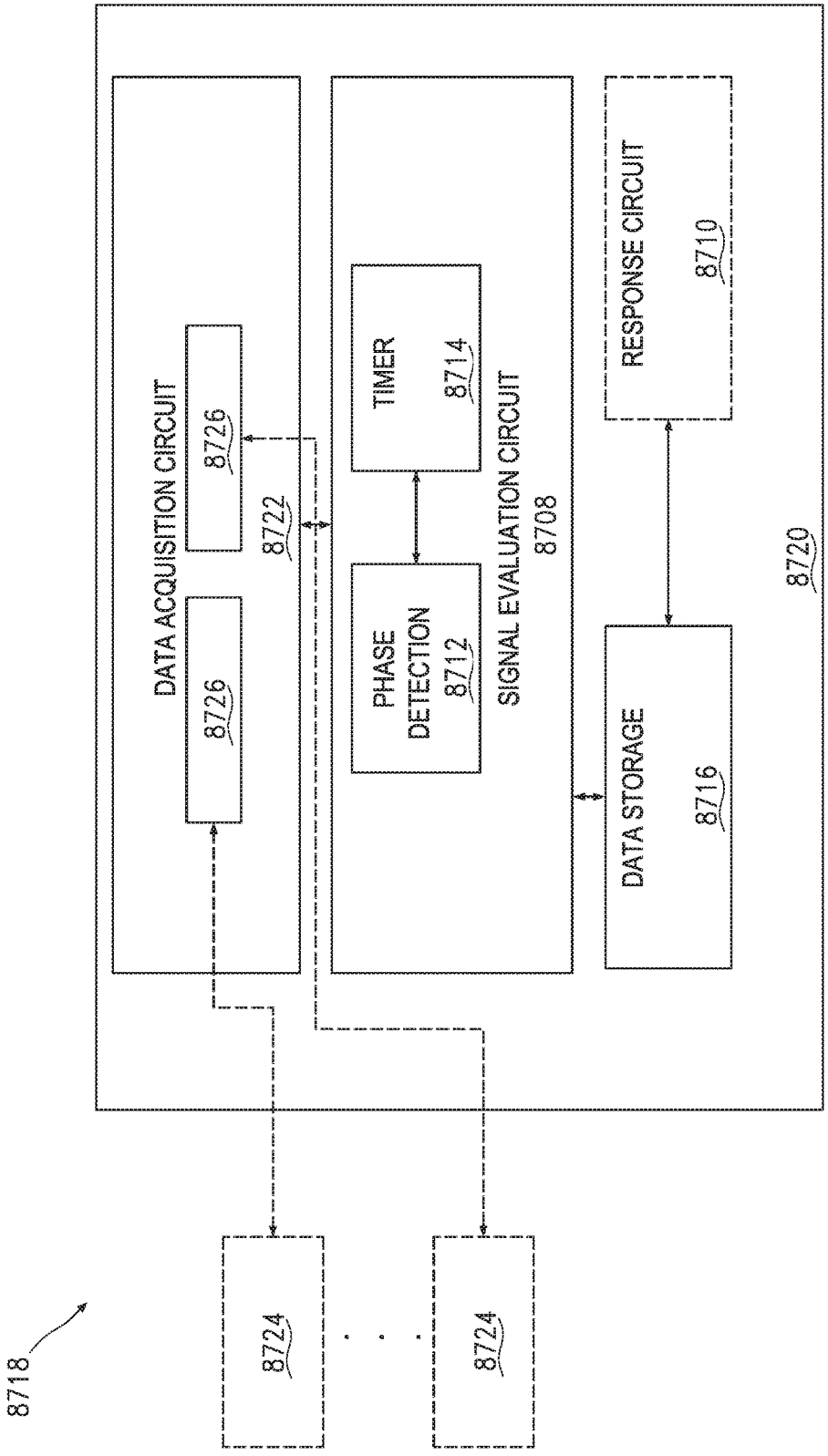
8718
8724
8724
8720
DATA ACQUISITION CIRCUIT
8726
8726
8722
SIGNAL EVALUATION CIRCUIT
8708
PHASE DETECTION 8712
TIMER 8714
RESPONSE CIRCUIT 8710
DATA STORAGE 8716

FIG. 68

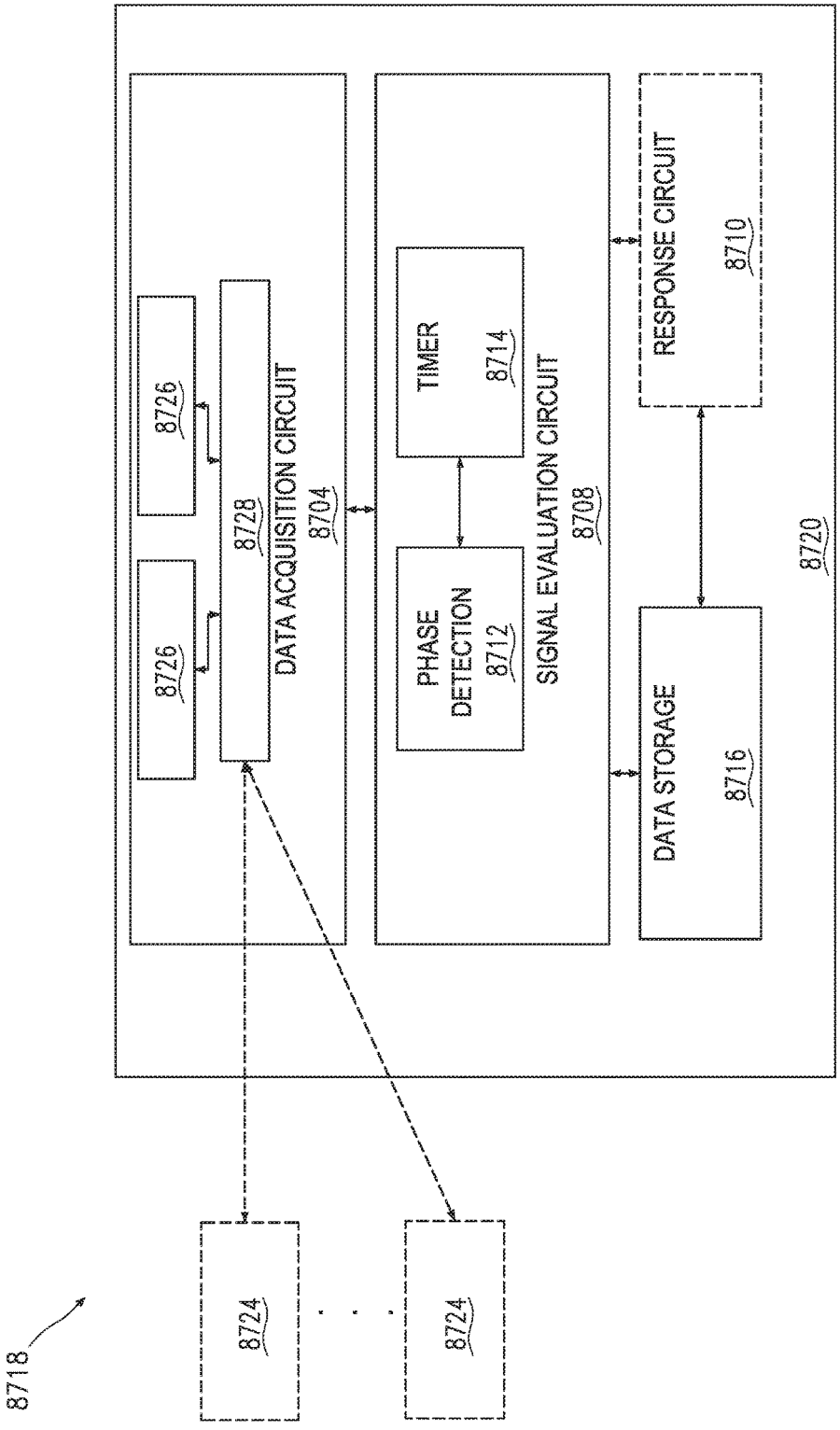
8718
8724
8724
8720
DATA ACQUISITION CIRCUIT
8704
8726
8726
8728
SIGNAL EVALUATION CIRCUIT
8708
PHASE DETECTION
8712
TIMER
8714
RESPONSE CIRCUIT
8710
DATA STORAGE
8716

FIG. 69

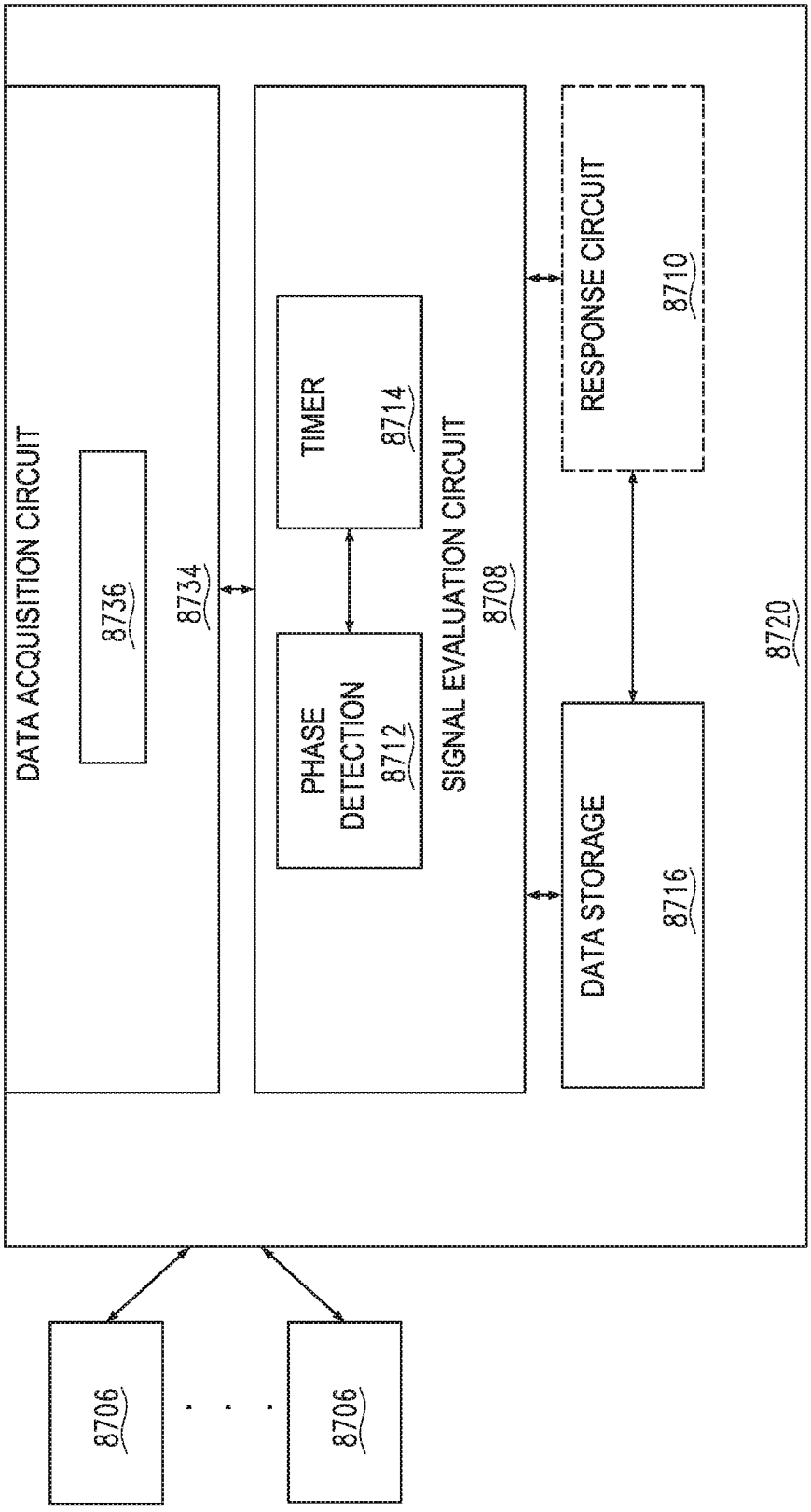
8720
DATA ACQUISITION CIRCUIT
8736
8734
SIGNAL EVALUATION CIRCUIT
8708
TIMER
8714
PHASE DETECTION
8712
RESPONSE CIRCUIT
8710
DATA STORAGE
8716
8706
8706

FIG. 70

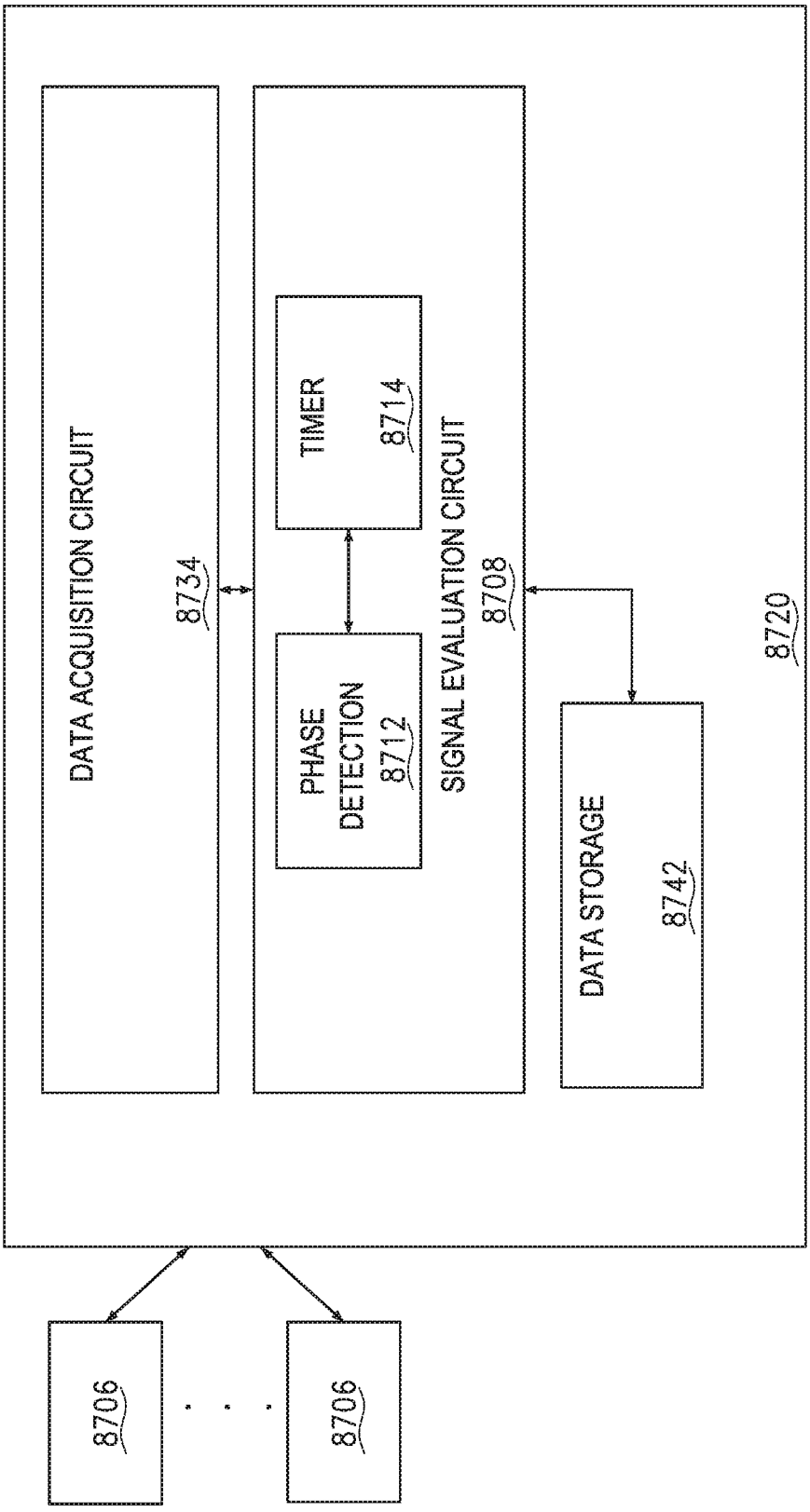
DATA ACQUISITION CIRCUIT
8734
SIGNAL EVALUATION CIRCUIT
8708
TIMER
8714
PHASE DETECTION
8712
DATA STORAGE
8742
8720
8706
8706

FIG. 71

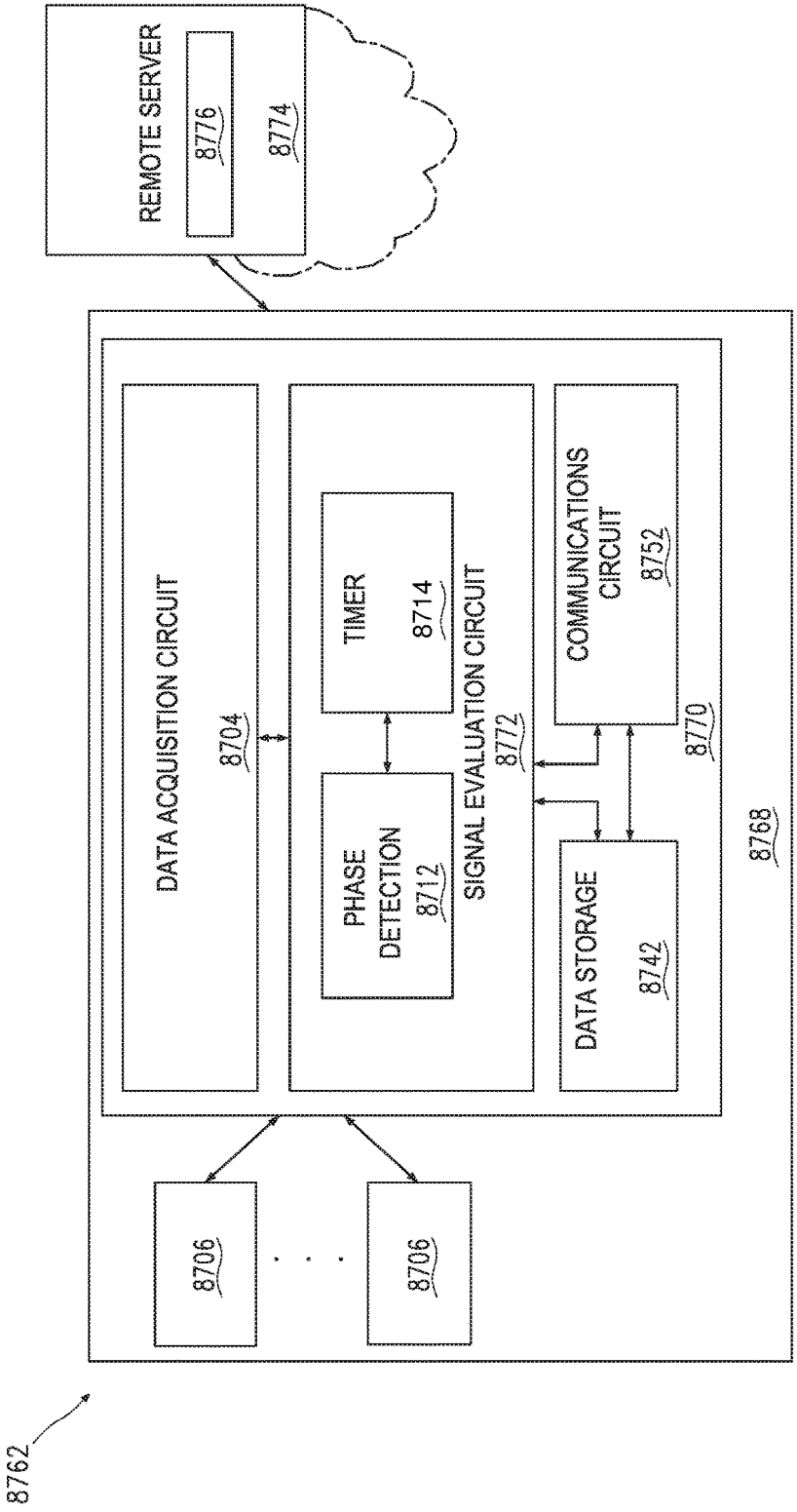
REMOTE SERVER
8776
8774
DATA ACQUISITION CIRCUIT
8704
TIMER
8714
PHASE DETECTION
8712
SIGNAL EVALUATION CIRCUIT
8772
COMMUNICATIONS CIRCUIT
8752
8770
DATA STORAGE
8742
8768
8706
8706
8762

FIG. 72

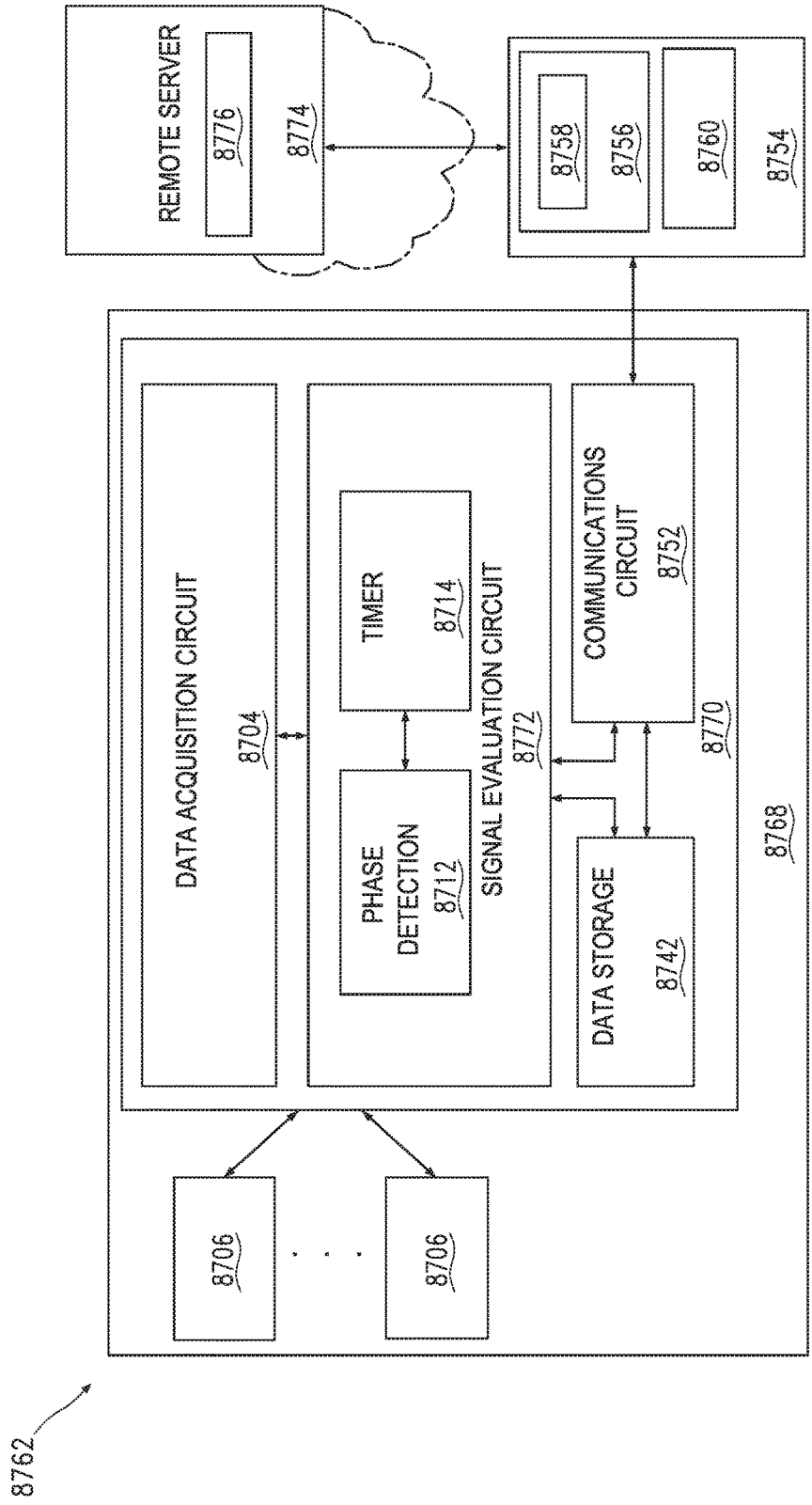
REMOTE SERVER
8776
8774
8758
8756
8760
8754
DATA ACQUISITION CIRCUIT
8704
TIMER
8714
PHASE DETECTION
8712
SIGNAL EVALUATION CIRCUIT
8772
COMMUNICATIONS CIRCUIT
8752
8770
DATA STORAGE
8742
8768
8706
8706
8762

FIG. 73

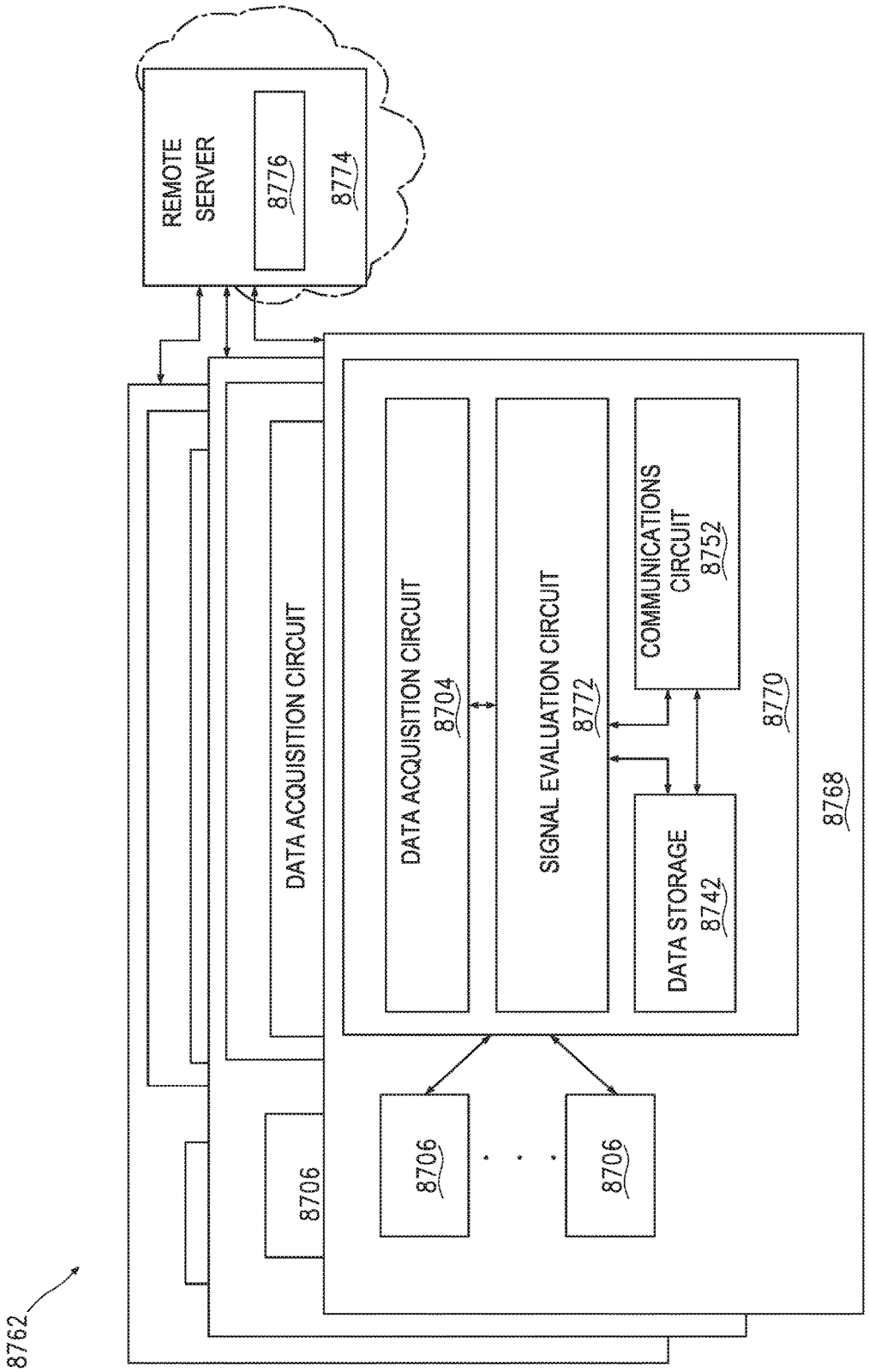
8762
REMOTE SERVER
8776
8774
DATA ACQUISITION CIRCUIT
DATA ACQUISITION CIRCUIT 8704
SIGNAL EVALUATION CIRCUIT 8772
COMMUNICATIONS CIRCUIT 8752
DATA STORAGE 8742
8770
8768
8706
8706
8706

FIG. 74

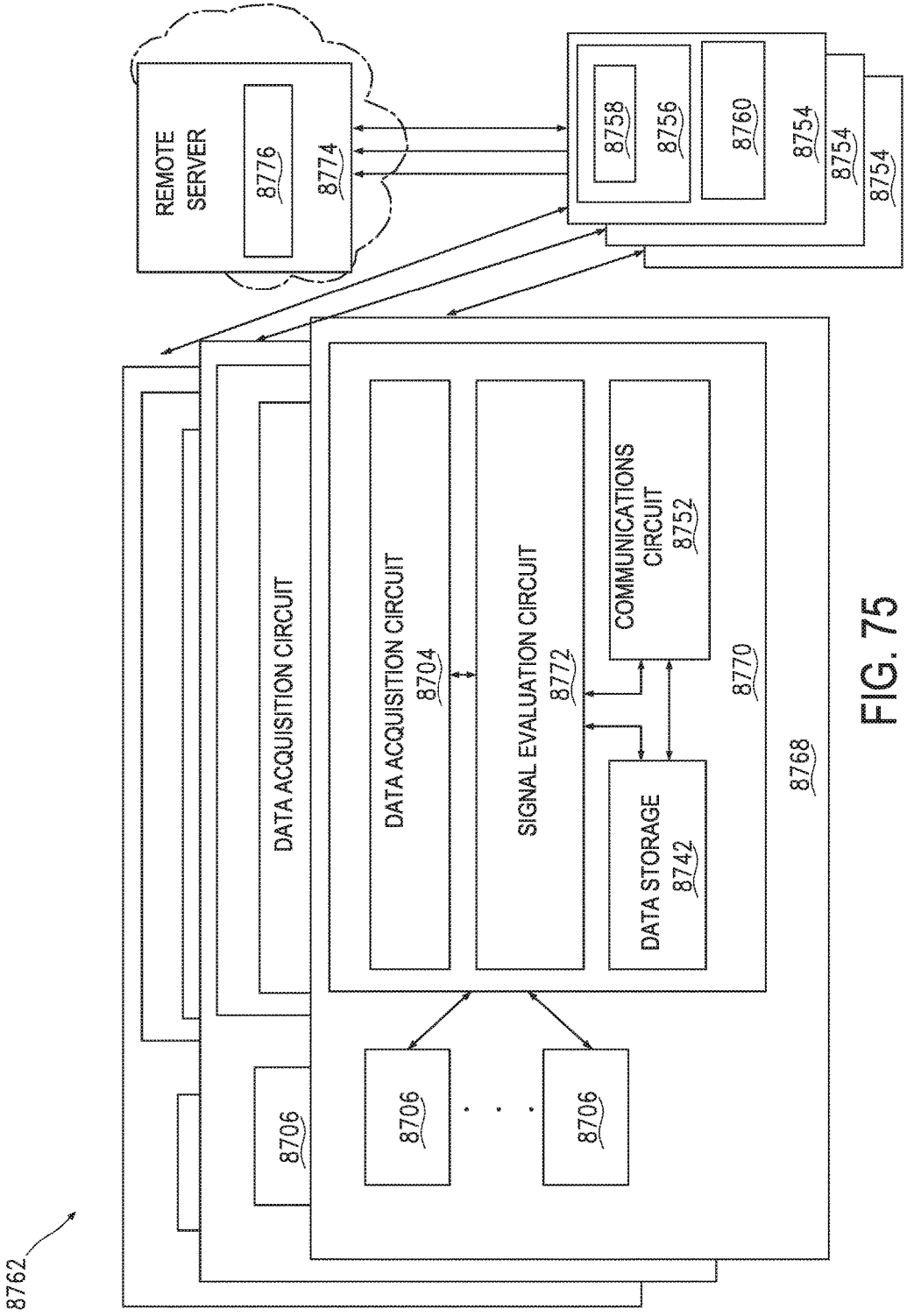
8762
REMOTE SERVER
8776
8774
8758
8756
8760
8754
8754
8754
DATA ACQUISITION CIRCUIT
DATA ACQUISITION CIRCUIT
8704
SIGNAL EVALUATION CIRCUIT
8772
COMMUNICATIONS CIRCUIT
8752
DATA STORAGE
8742
8770
8768
8706
8706
8706

FIG. 75

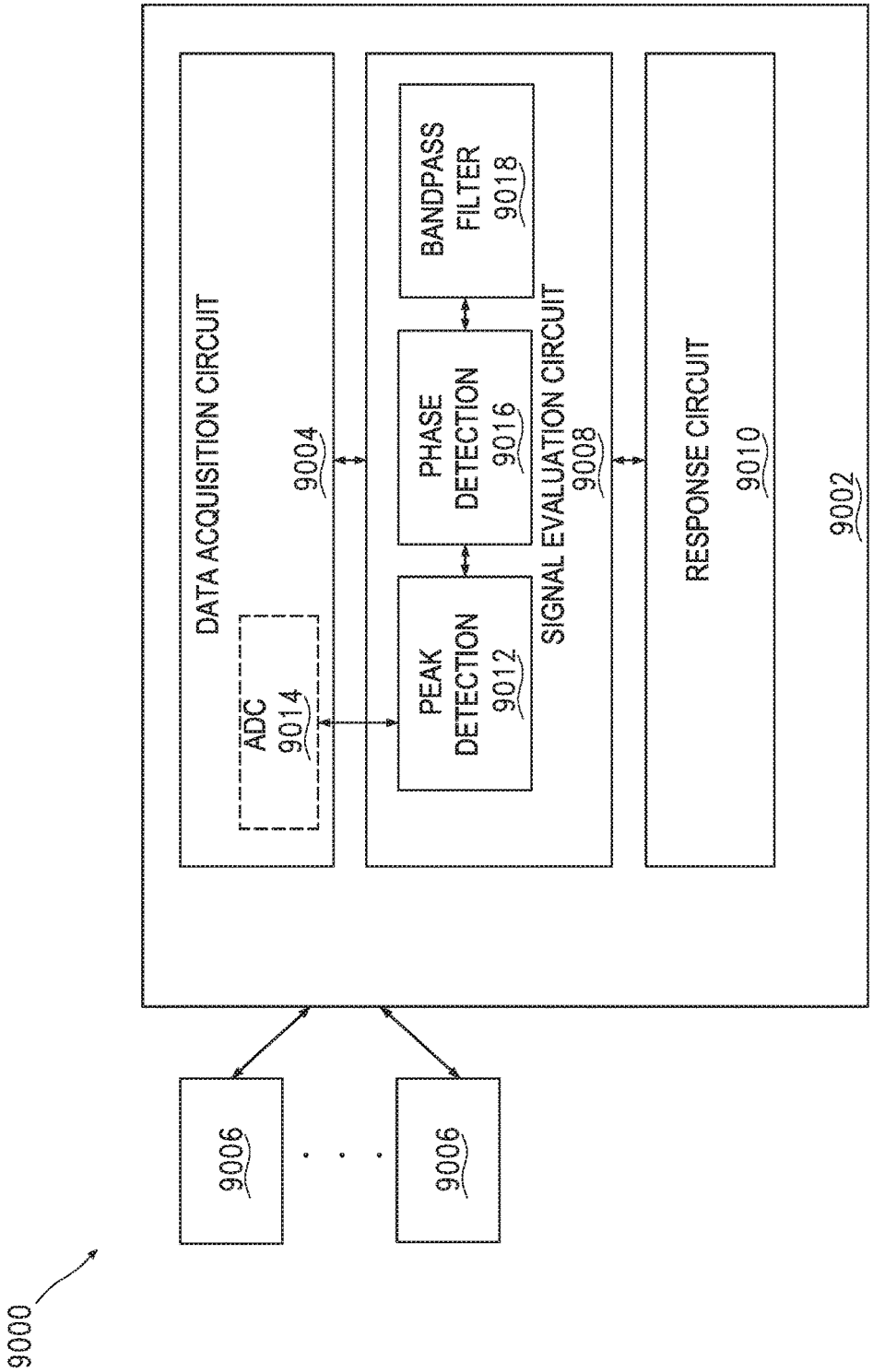
9000
9006
9006
9002
DATA ACQUISITION CIRCUIT
9004
ADC
9014
SIGNAL EVALUATION CIRCUIT
9008
PEAK DETECTION
9012
PHASE DETECTION
9016
BANDPASS FILTER
9018
RESPONSE CIRCUIT
9010

FIG. 76

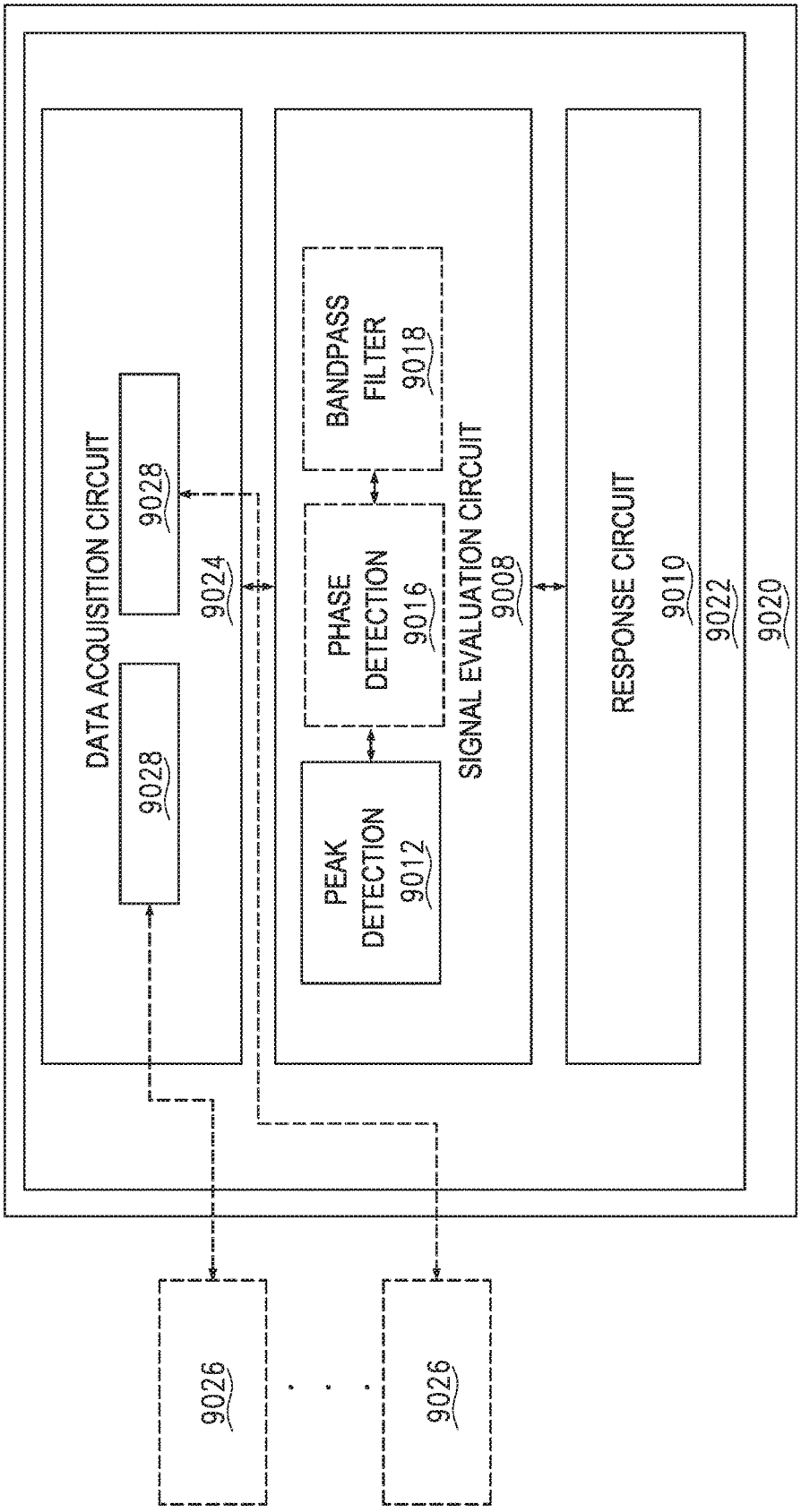
DATA ACQUISITION CIRCUIT
9028
9028
9024
SIGNAL EVALUATION CIRCUIT
9008
PEAK DETECTION 9012
PHASE DETECTION 9016
BANDPASS FILTER 9018
RESPONSE CIRCUIT
9010
9022
9020
9026
9026

FIG. 77

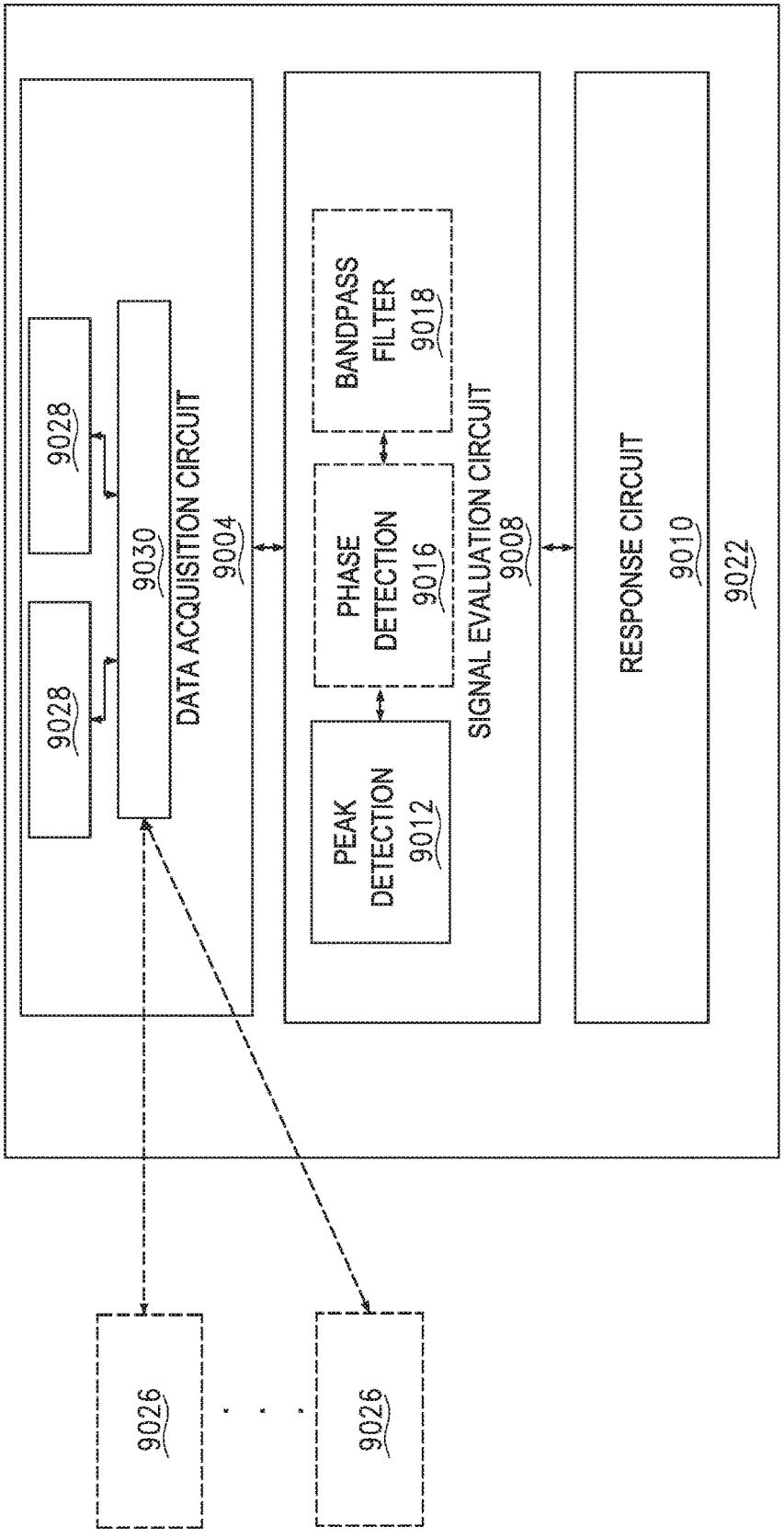
9022
DATA ACQUISITION CIRCUIT
9004
9028
9028
9030
SIGNAL EVALUATION CIRCUIT
9008
PEAK DETECTION
9012
PHASE DETECTION
9016
BANDPASS FILTER
9018
RESPONSE CIRCUIT
9010
9026
9026

FIG. 78

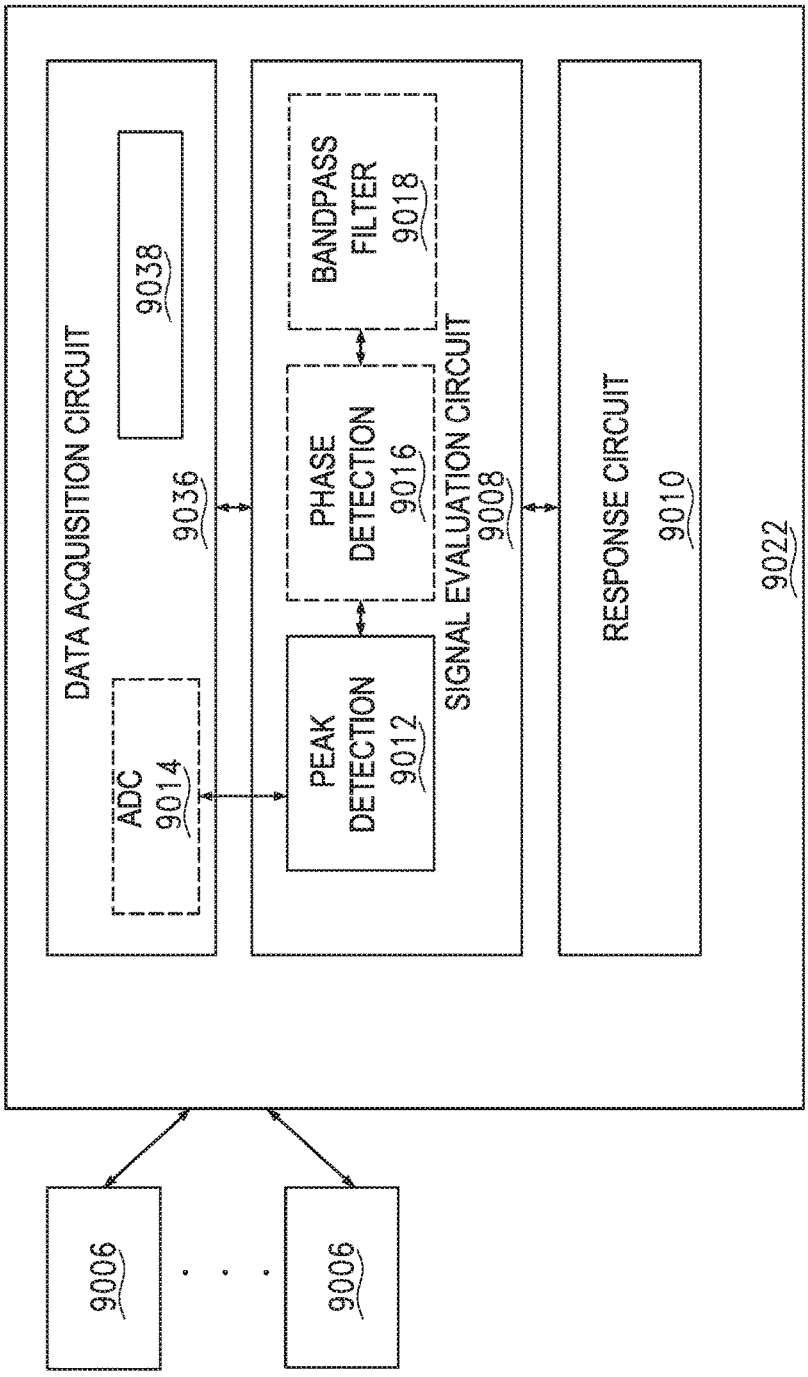
9022
DATA ACQUISITION CIRCUIT
9036
ADC
9014
9038
SIGNAL EVALUATION CIRCUIT
9008
PEAK DETECTION
9012
PHASE DETECTION
9016
BANDPASS FILTER
9018
RESPONSE CIRCUIT
9010
9006
9006

FIG. 79

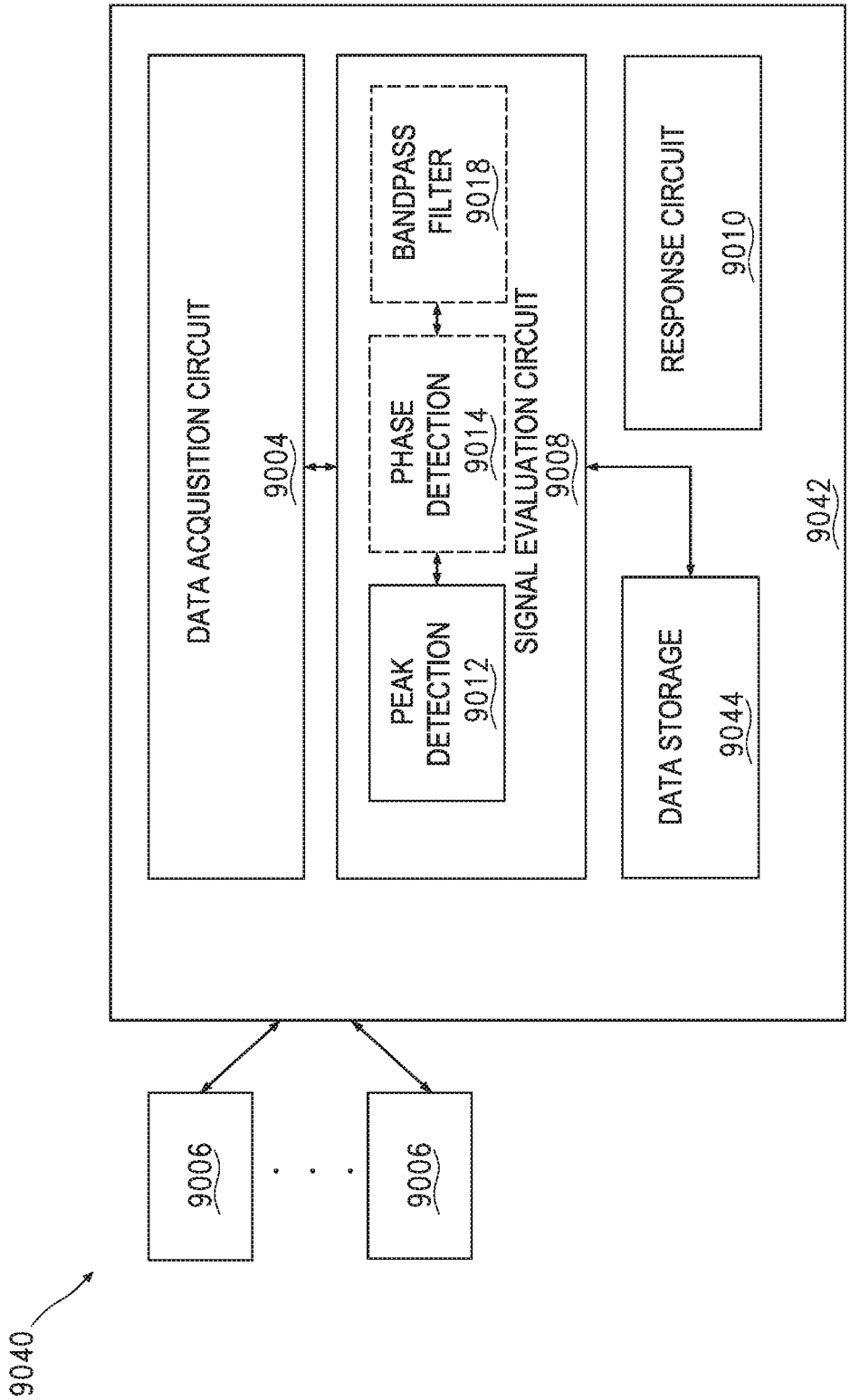
9040
9006
9006
9042
DATA ACQUISITION CIRCUIT
9004
SIGNAL EVALUATION CIRCUIT
9008
PEAK DETECTION 9012
PHASE DETECTION 9014
BANDPASS FILTER 9018
RESPONSE CIRCUIT 9010
DATA STORAGE 9044

FIG. 80

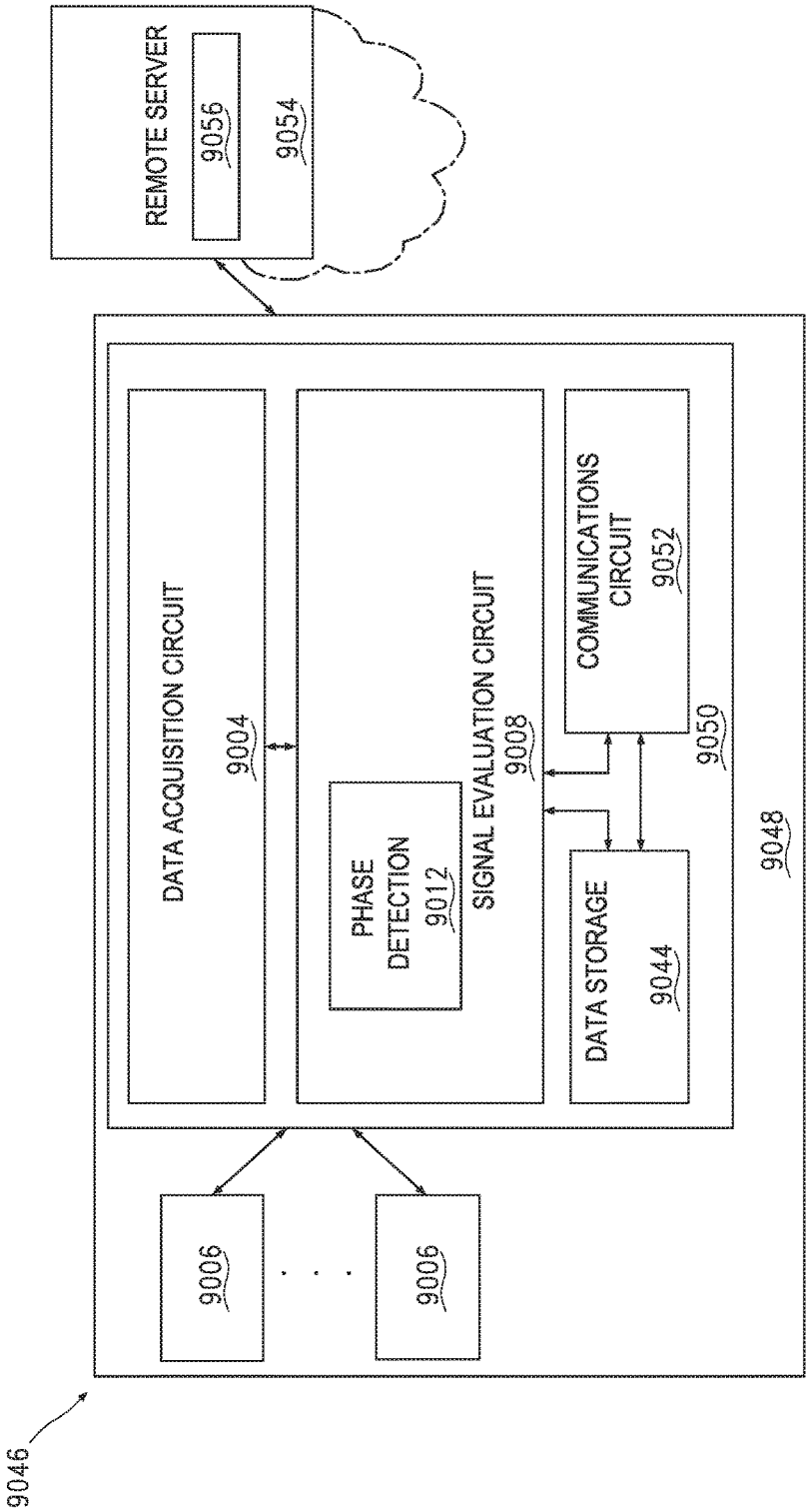
REMOTE SERVER
9056
9054
DATA ACQUISITION CIRCUIT
9004
PHASE DETECTION
9012
SIGNAL EVALUATION CIRCUIT
9008
COMMUNICATIONS CIRCUIT
9052
DATA STORAGE
9044
9050
9048
9006
9006
9046

FIG. 81

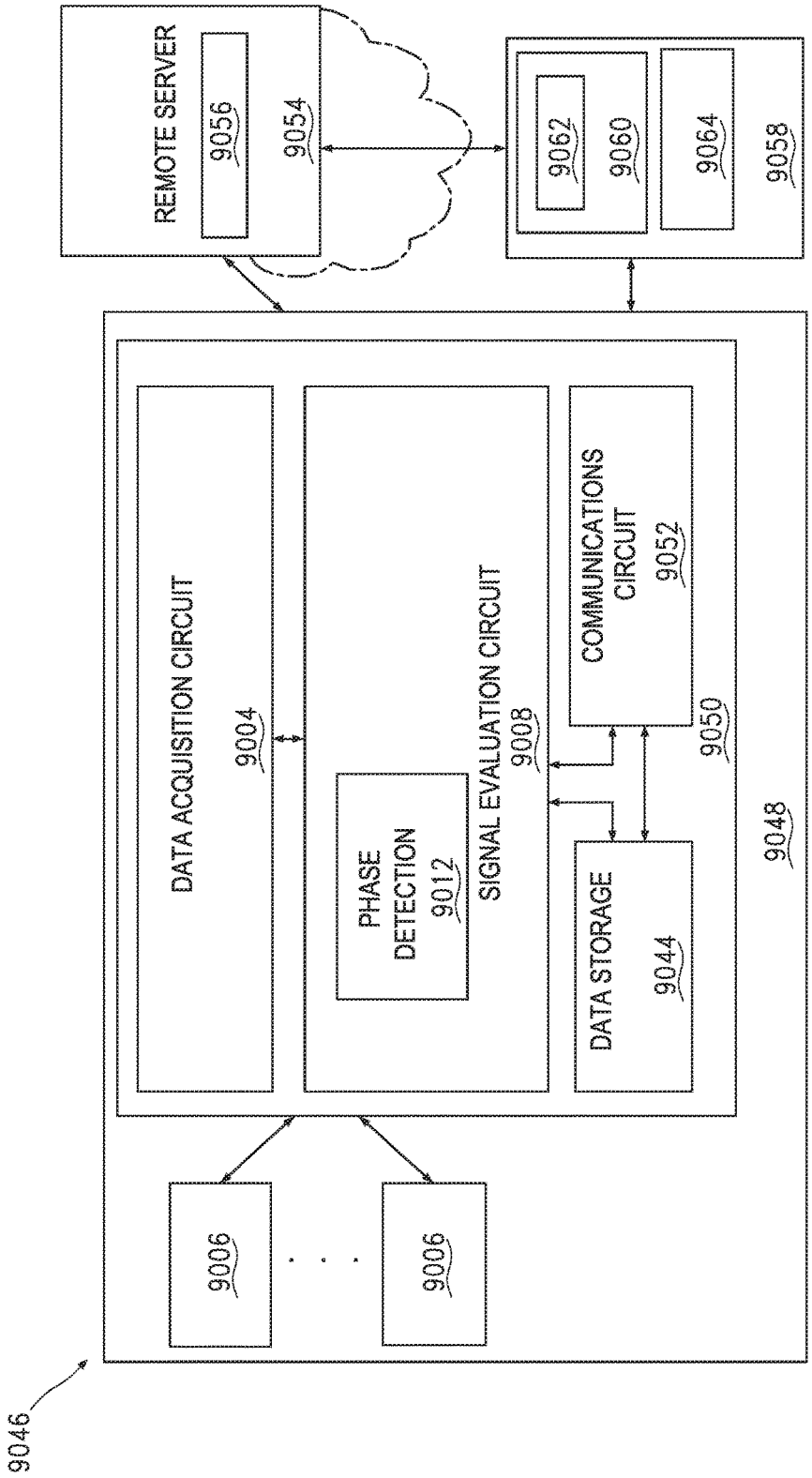
REMOTE SERVER
9056
9054
9062
9060
9064
9058
DATA ACQUISITION CIRCUIT
9004
PHASE DETECTION
9012
SIGNAL EVALUATION CIRCUIT
9008
COMMUNICATIONS CIRCUIT
9052
9050
DATA STORAGE
9044
9048
9006
9006
9046

FIG. 82

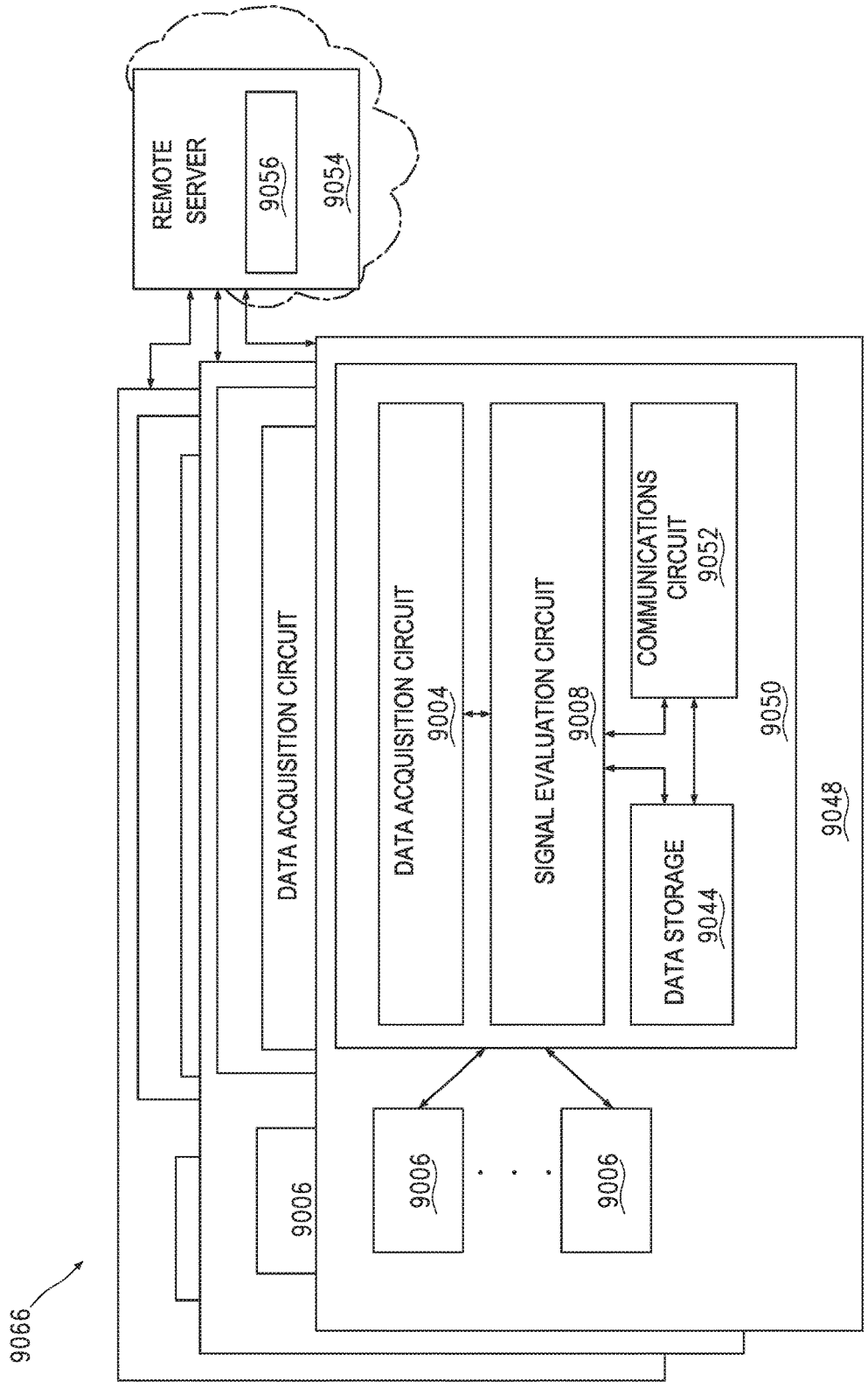
REMOTE SERVER
9056
9054
DATA ACQUISITION CIRCUIT
DATA ACQUISITION CIRCUIT
9004
SIGNAL EVALUATION CIRCUIT
9008
COMMUNICATIONS CIRCUIT
9052
DATA STORAGE
9044
9050
9048
9006
9006
9006
9066

FIG. 83

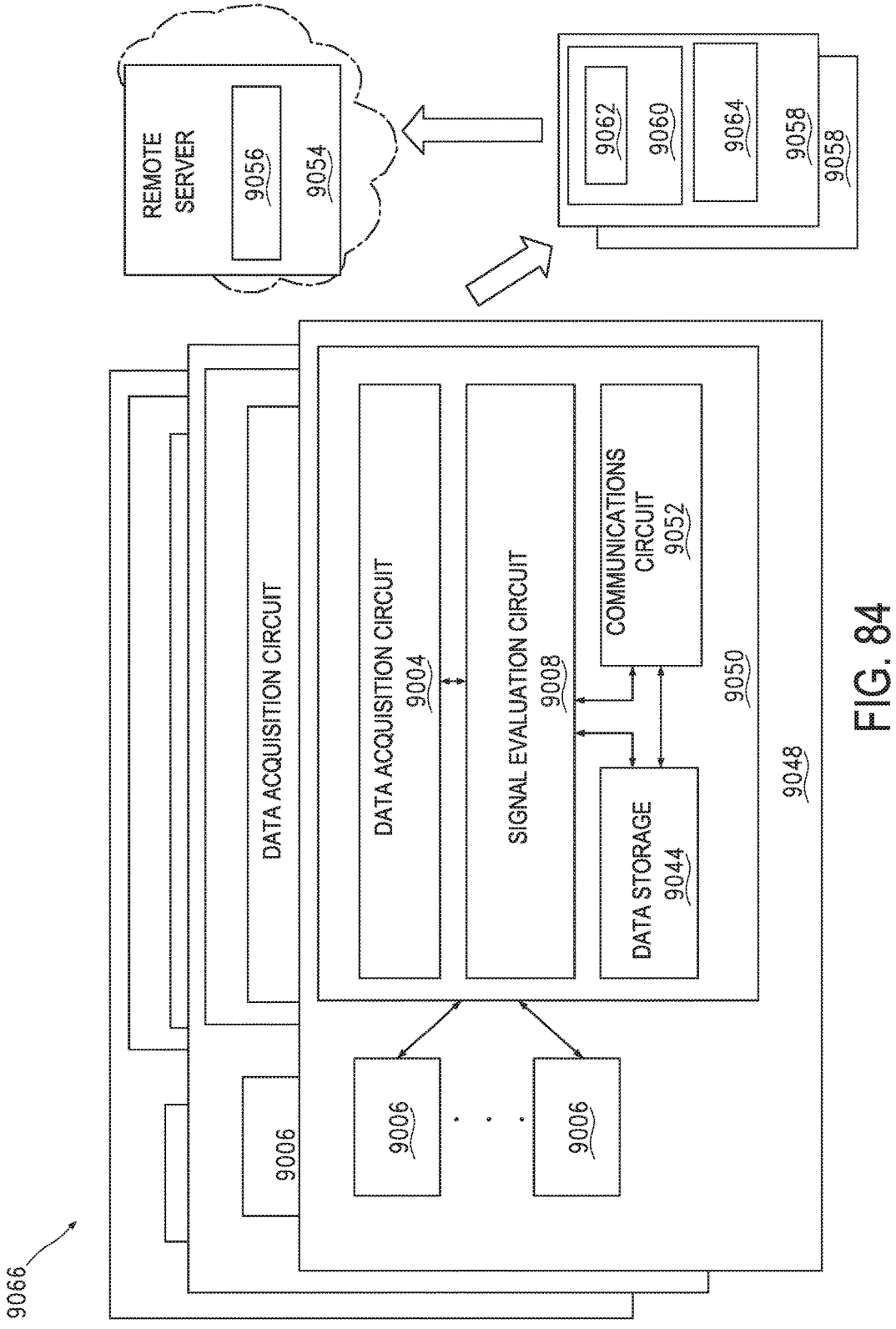
REMOTE SERVER
9056
9054
9062
9060
9064
9058
9058
DATA ACQUISITION CIRCUIT
DATA ACQUISITION CIRCUIT
9004
SIGNAL EVALUATION CIRCUIT
9008
COMMUNICATIONS CIRCUIT
9052
DATA STORAGE
9044
9050
9048
9006
9006
9006
9066

FIG. 84

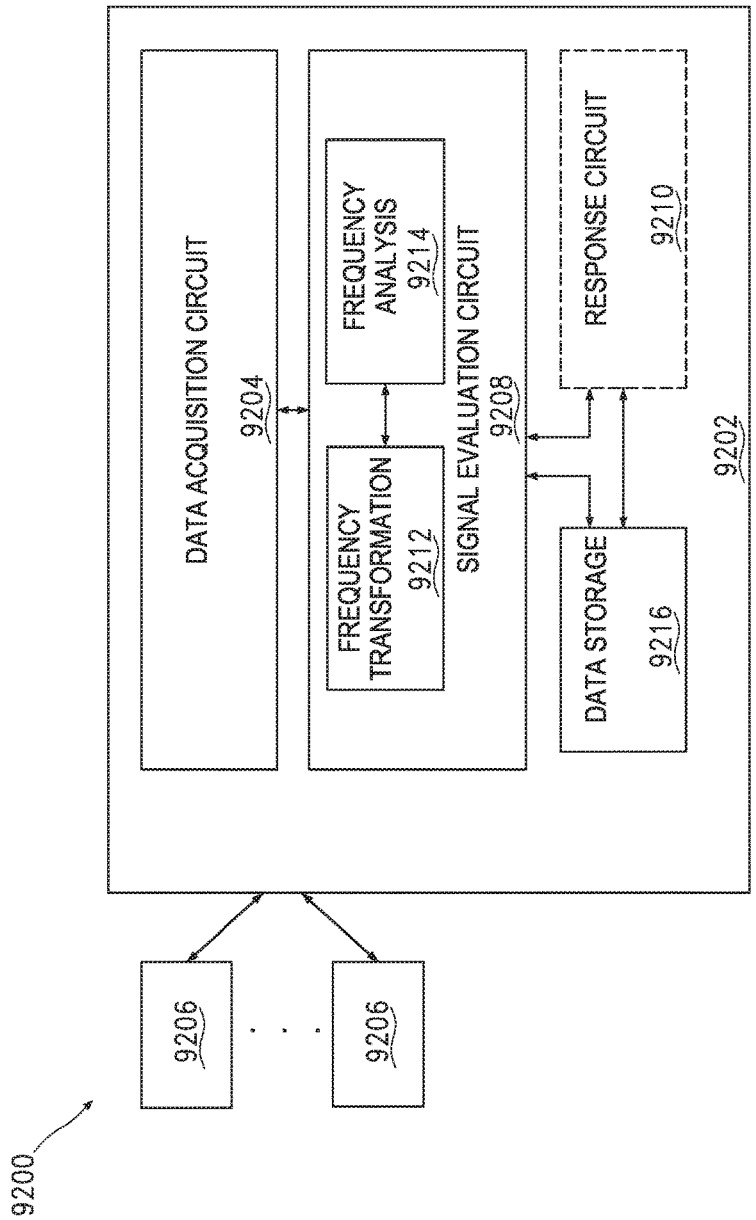
9200
9206
9206
9202
DATA ACQUISITION CIRCUIT
9204
SIGNAL EVALUATION CIRCUIT
9208
FREQUENCY TRANSFORMATION
9212
FREQUENCY ANALYSIS
9214
RESPONSE CIRCUIT
9210
DATA STORAGE
9216

FIG. 85

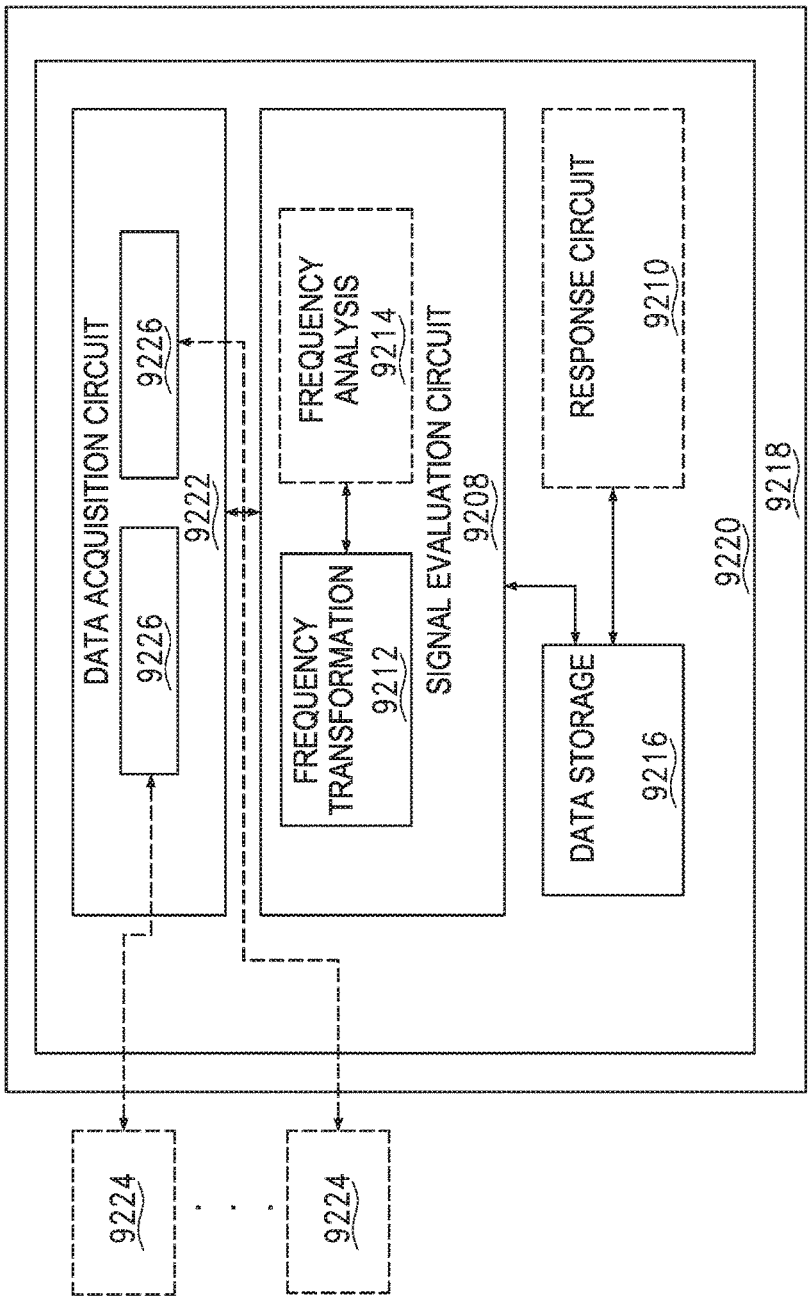
9218
9220
DATA ACQUISITION CIRCUIT
9226
9226
9222
SIGNAL EVALUATION CIRCUIT
9208
FREQUENCY TRANSFORMATION
9212
FREQUENCY ANALYSIS
9214
DATA STORAGE
9216
RESPONSE CIRCUIT
9210
9224
9224

FIG. 86

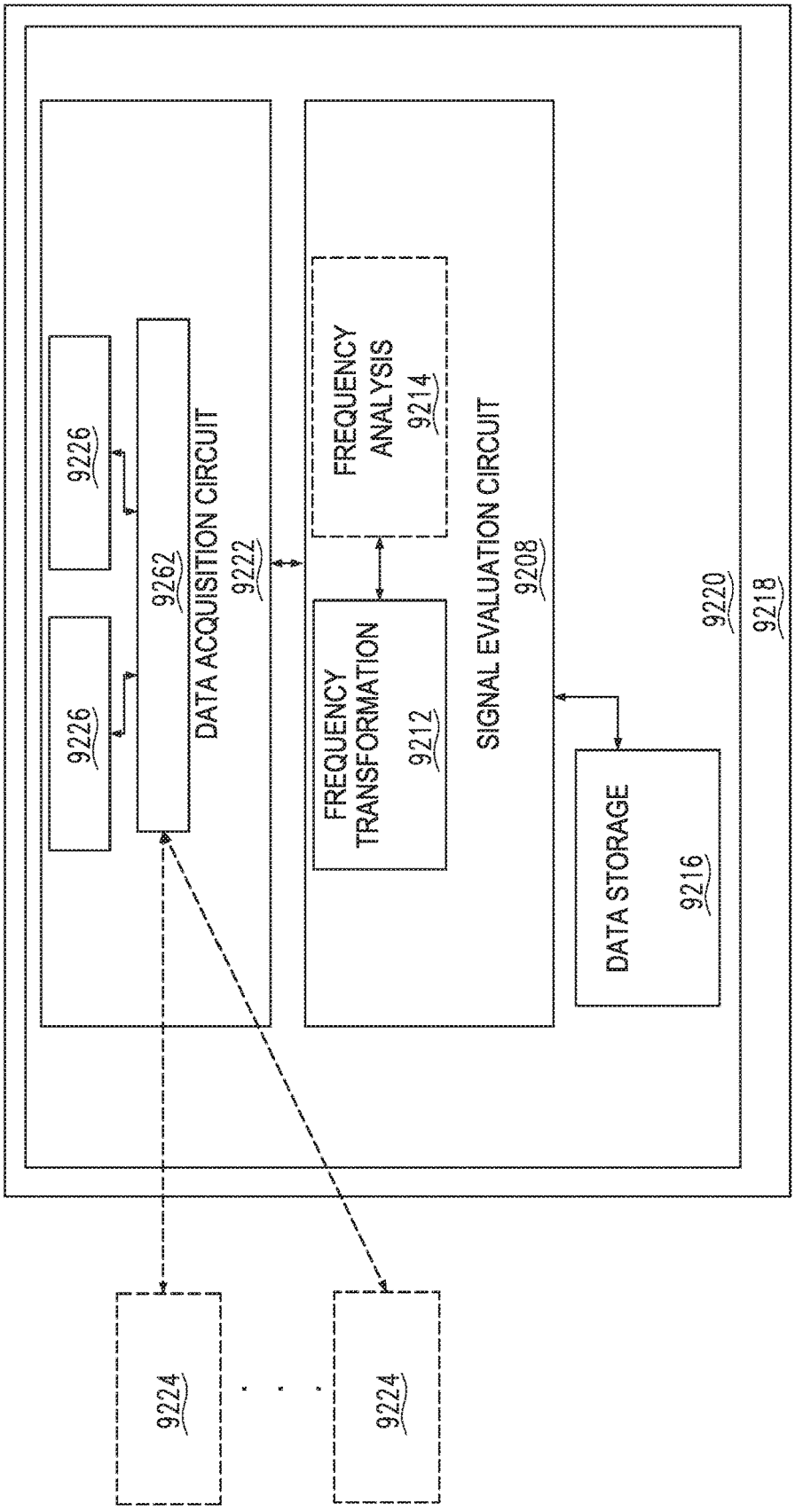
9218
9220
9222
DATA ACQUISITION CIRCUIT
9226
9226
9262
SIGNAL EVALUATION CIRCUIT
9208
FREQUENCY TRANSFORMATION
9212
FREQUENCY ANALYSIS
9214
DATA STORAGE
9216
9224
9224

FIG. 87

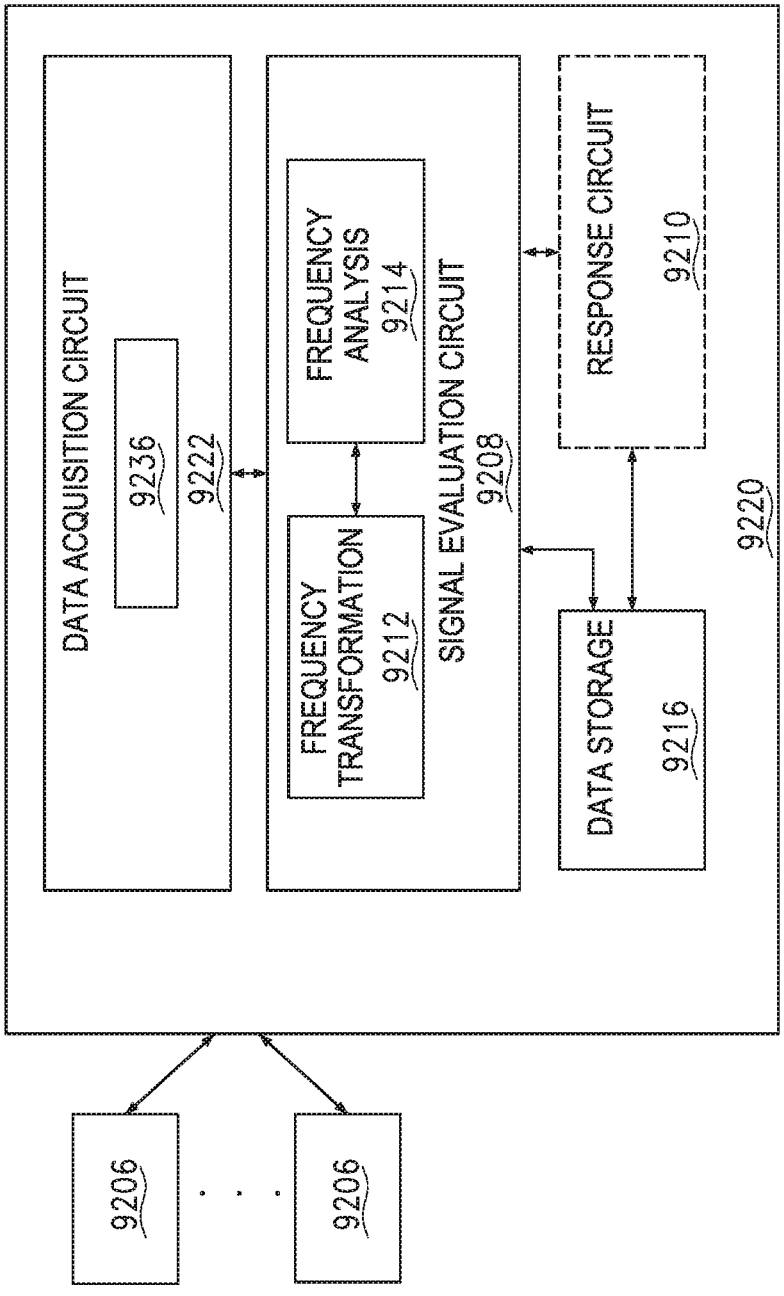
DATA ACQUISITION CIRCUIT
9236
9222
FREQUENCY TRANSFORMATION
9212
FREQUENCY ANALYSIS
9214
SIGNAL EVALUATION CIRCUIT
9208
RESPONSE CIRCUIT
9210
DATA STORAGE
9216
9220
9206
9206

FIG. 88

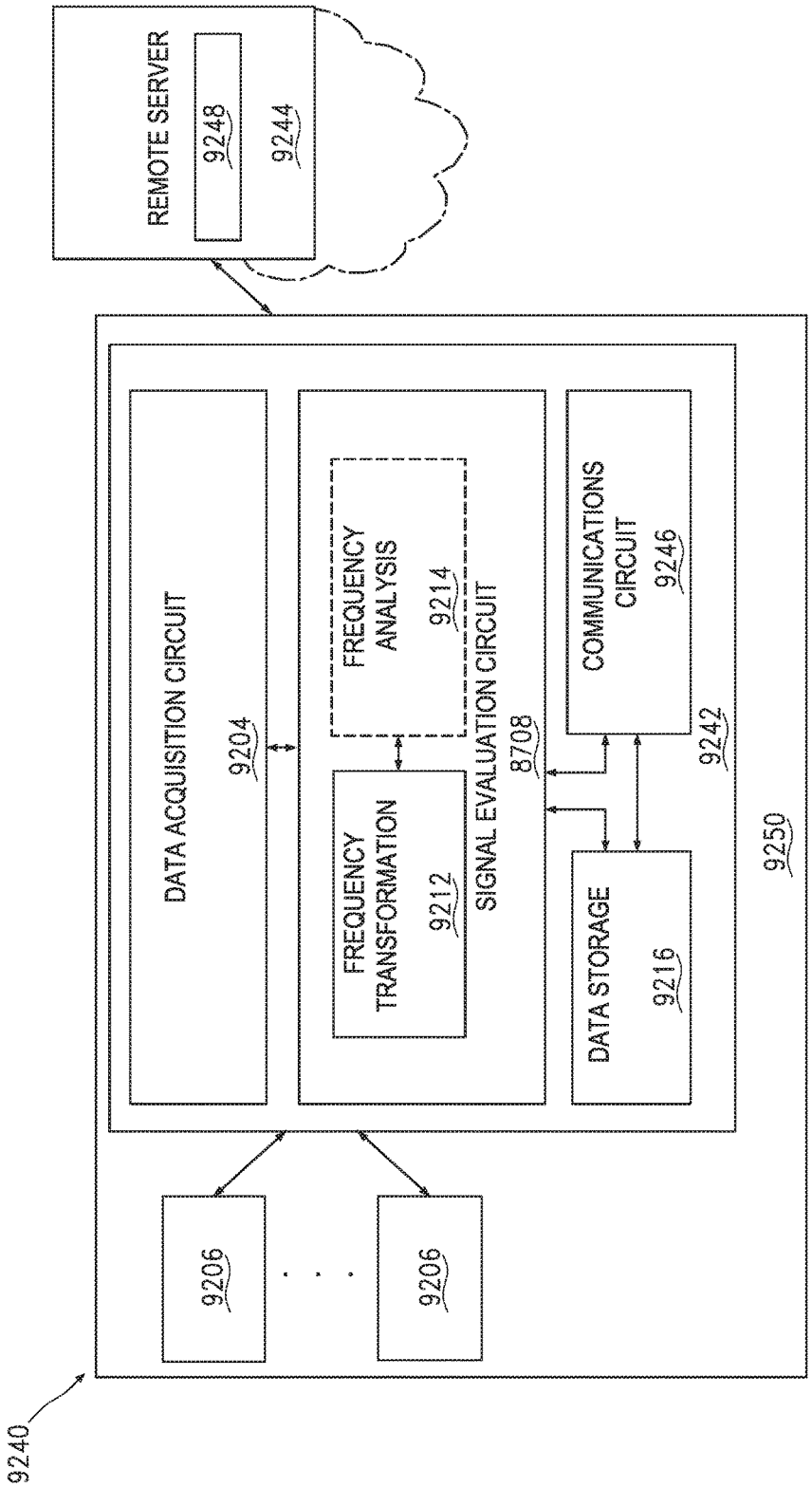
REMOTE SERVER
9248
9244
DATA ACQUISITION CIRCUIT
9204
FREQUENCY TRANSFORMATION
9212
FREQUENCY ANALYSIS
9214
SIGNAL EVALUATION CIRCUIT
8708
COMMUNICATIONS CIRCUIT
9246
DATA STORAGE
9216
9242
9250
9206
9206
9240

FIG. 89

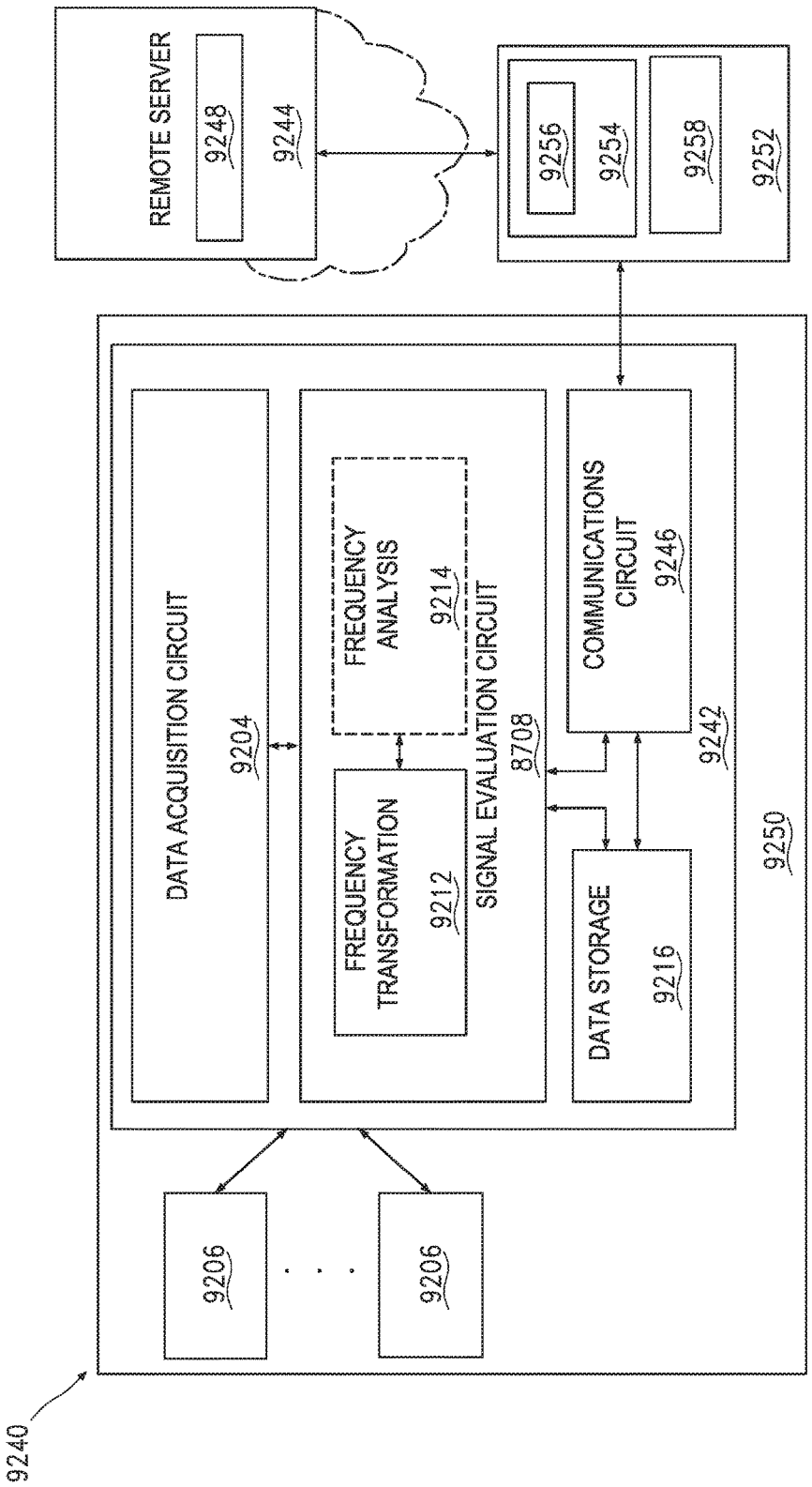
9240
9206
9206
9250
DATA ACQUISITION CIRCUIT
9204
FREQUENCY TRANSFORMATION
9212
FREQUENCY ANALYSIS
9214
SIGNAL EVALUATION CIRCUIT
8708
COMMUNICATIONS CIRCUIT
9246
9242
DATA STORAGE
9216
REMOTE SERVER
9248
9244
9256
9254
9258
9252

FIG. 90

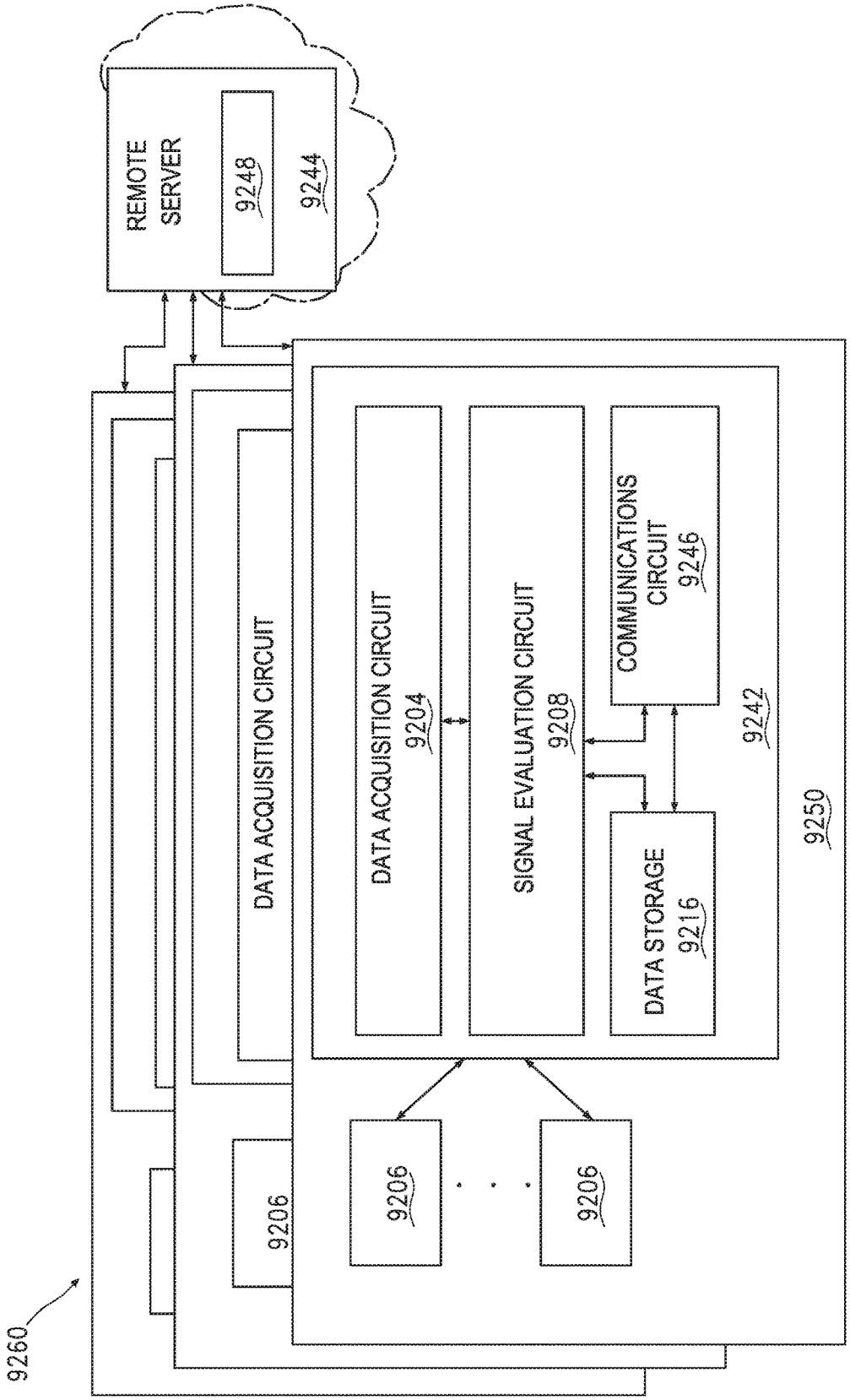
REMOTE SERVER
9248
9244
DATA ACQUISITION CIRCUIT
DATA ACQUISITION CIRCUIT 9204
SIGNAL EVALUATION CIRCUIT 9208
COMMUNICATIONS CIRCUIT 9246
DATA STORAGE 9216
9242
9250
9206
9206
9206
9260

FIG. 91

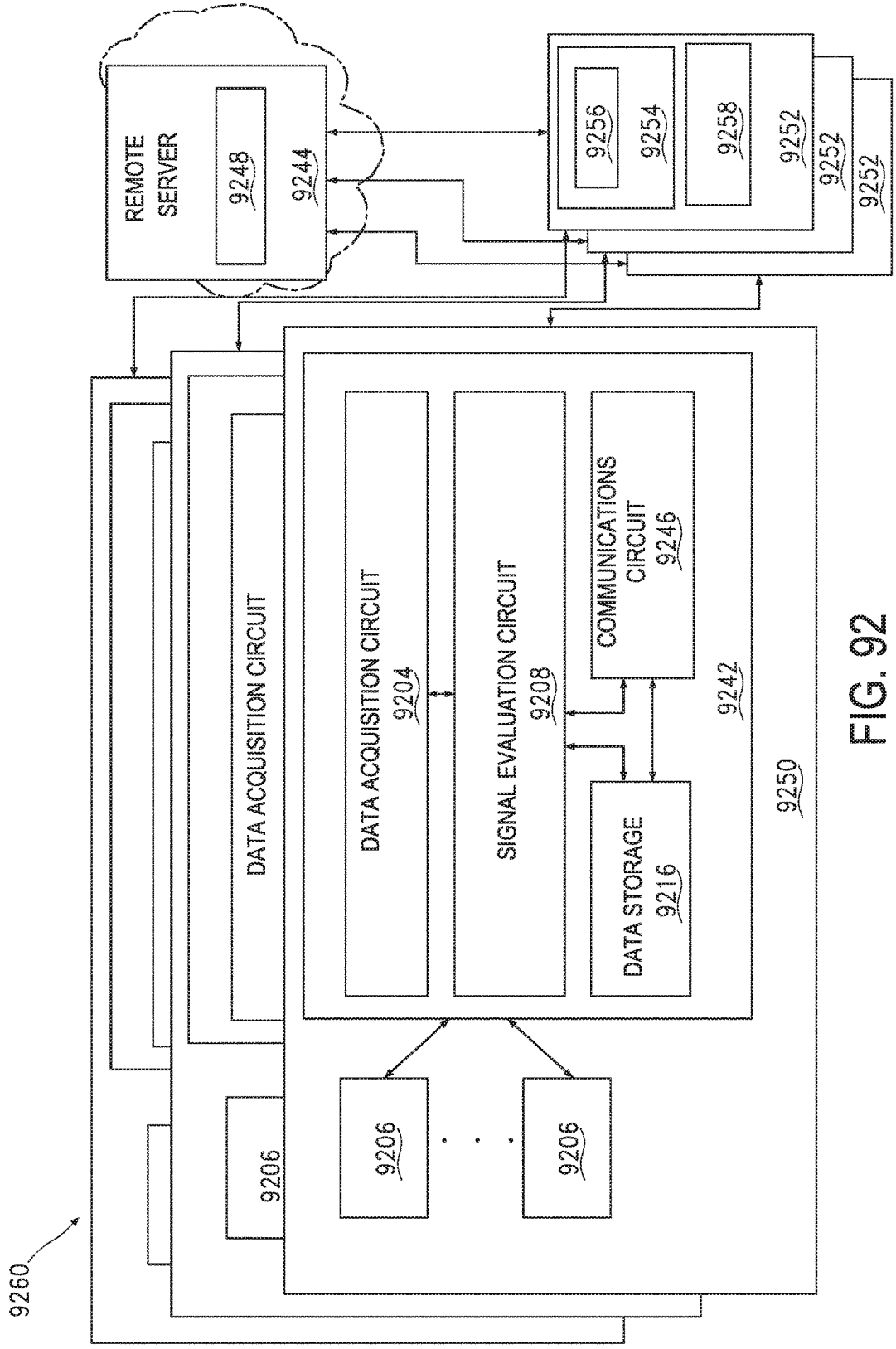
REMOTE SERVER
9248
9244
9256
9254
9258
9252
9252
9252
DATA ACQUISITION CIRCUIT
DATA ACQUISITION CIRCUIT 9204
SIGNAL EVALUATION CIRCUIT 9208
COMMUNICATIONS CIRCUIT 9246
DATA STORAGE 9216
9242
9250
9206
9206
9206
9260

FIG. 92

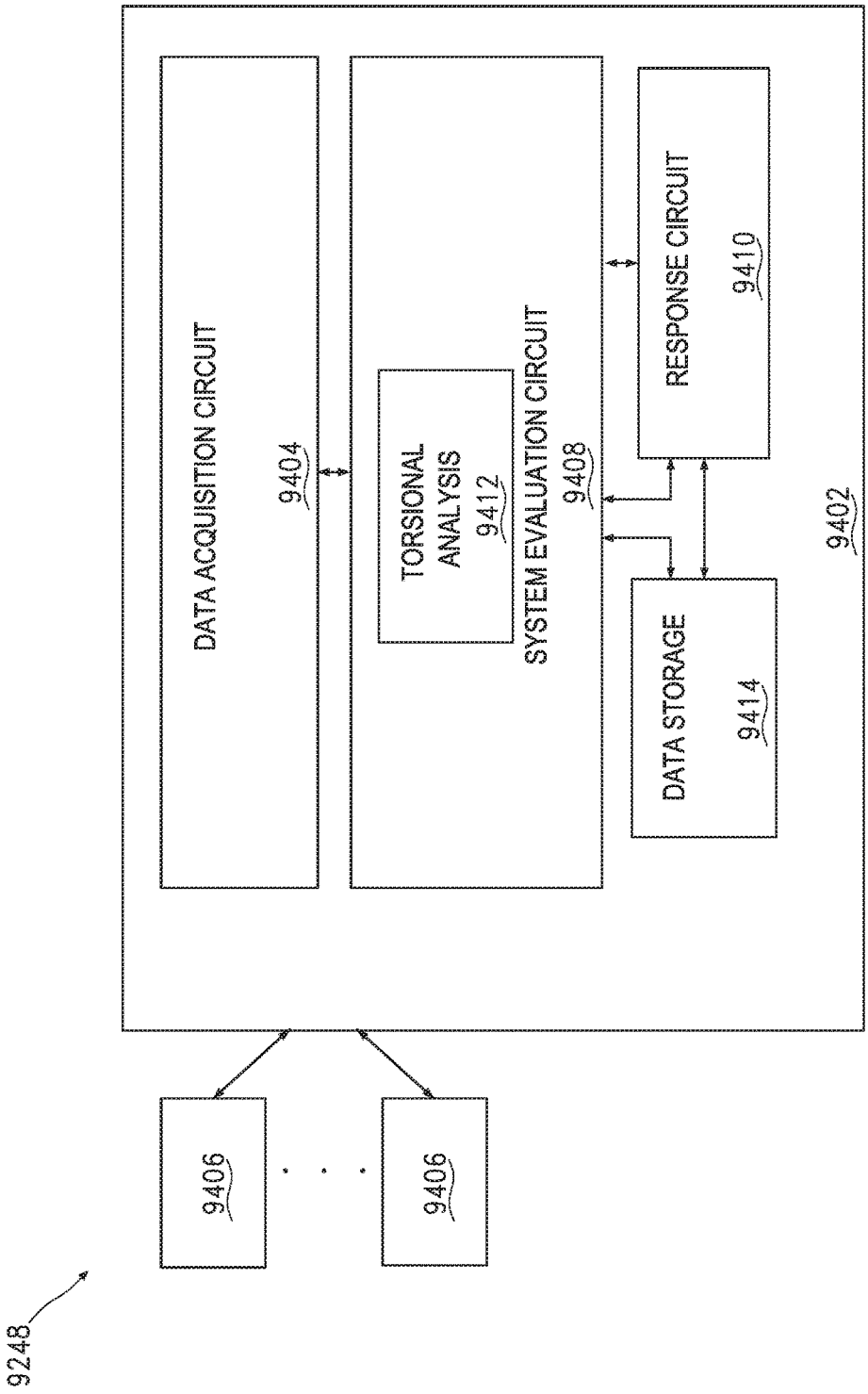
9248
9406
9406
9402
DATA ACQUISITION CIRCUIT
9404
SYSTEM EVALUATION CIRCUIT
9408
TORSIONAL ANALYSIS
9412
RESPONSE CIRCUIT
9410
DATA STORAGE
9414

FIG. 93

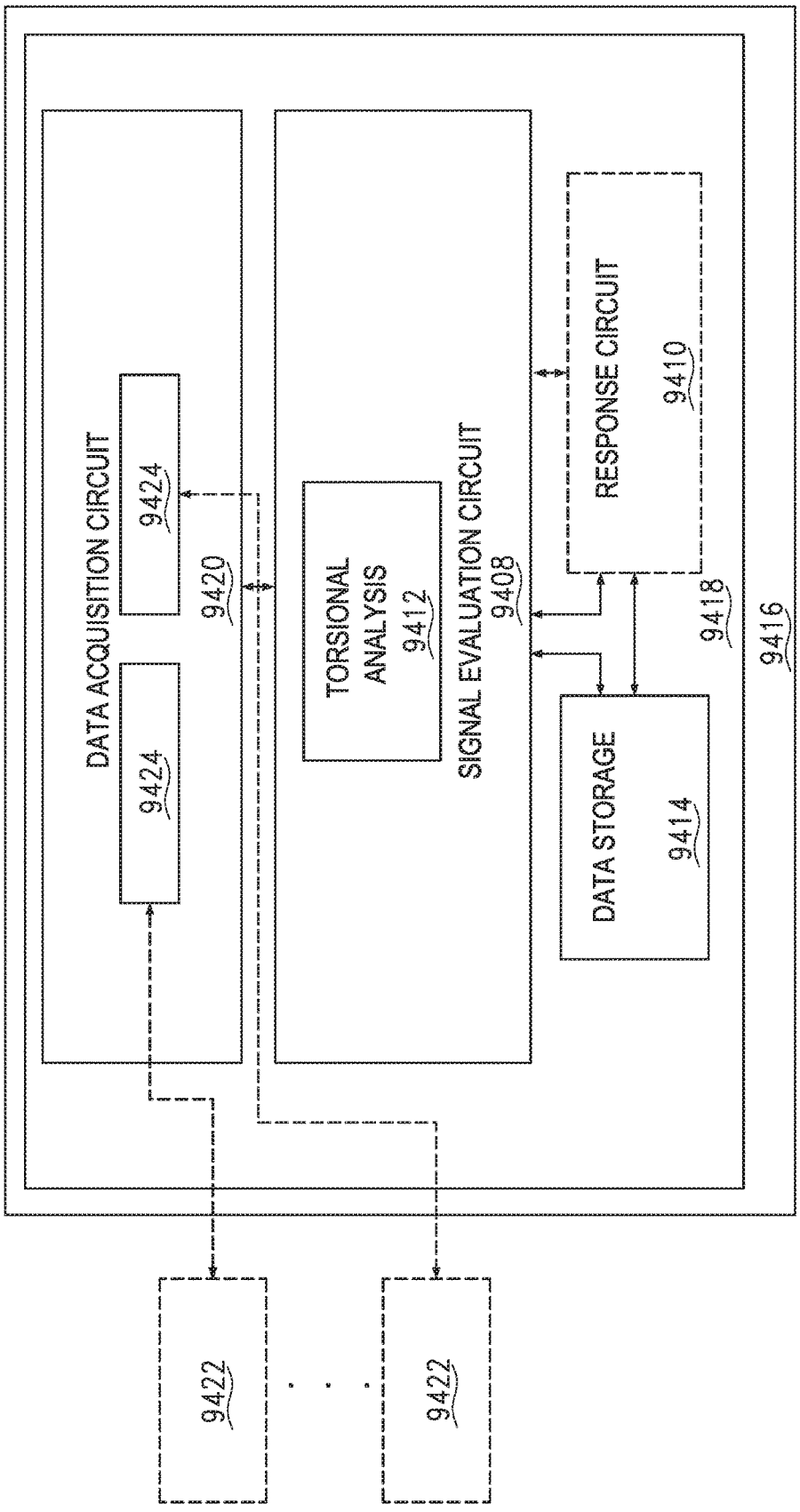
DATA ACQUISITION CIRCUIT
9424
9424
9420
TORSIONAL ANALYSIS 9412
SIGNAL EVALUATION CIRCUIT 9408
RESPONSE CIRCUIT 9410
DATA STORAGE 9414
9418
9416
9422
9422

FIG. 94

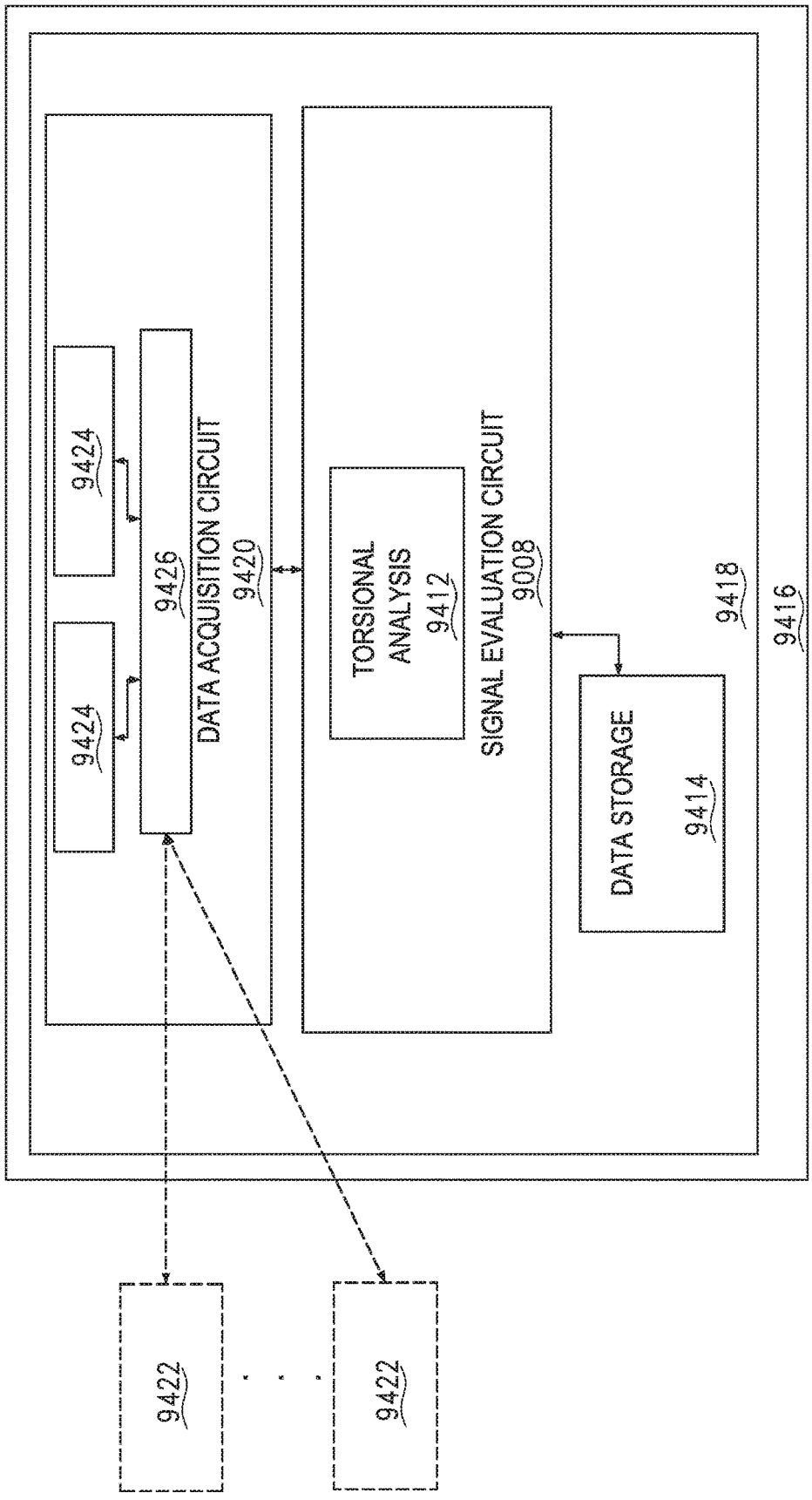
9416
9418
DATA ACQUISITION CIRCUIT
9420
9424
9426
9424
SIGNAL EVALUATION CIRCUIT
9008
TORSIONAL ANALYSIS
9412
DATA STORAGE
9414
9422
9422

FIG. 95

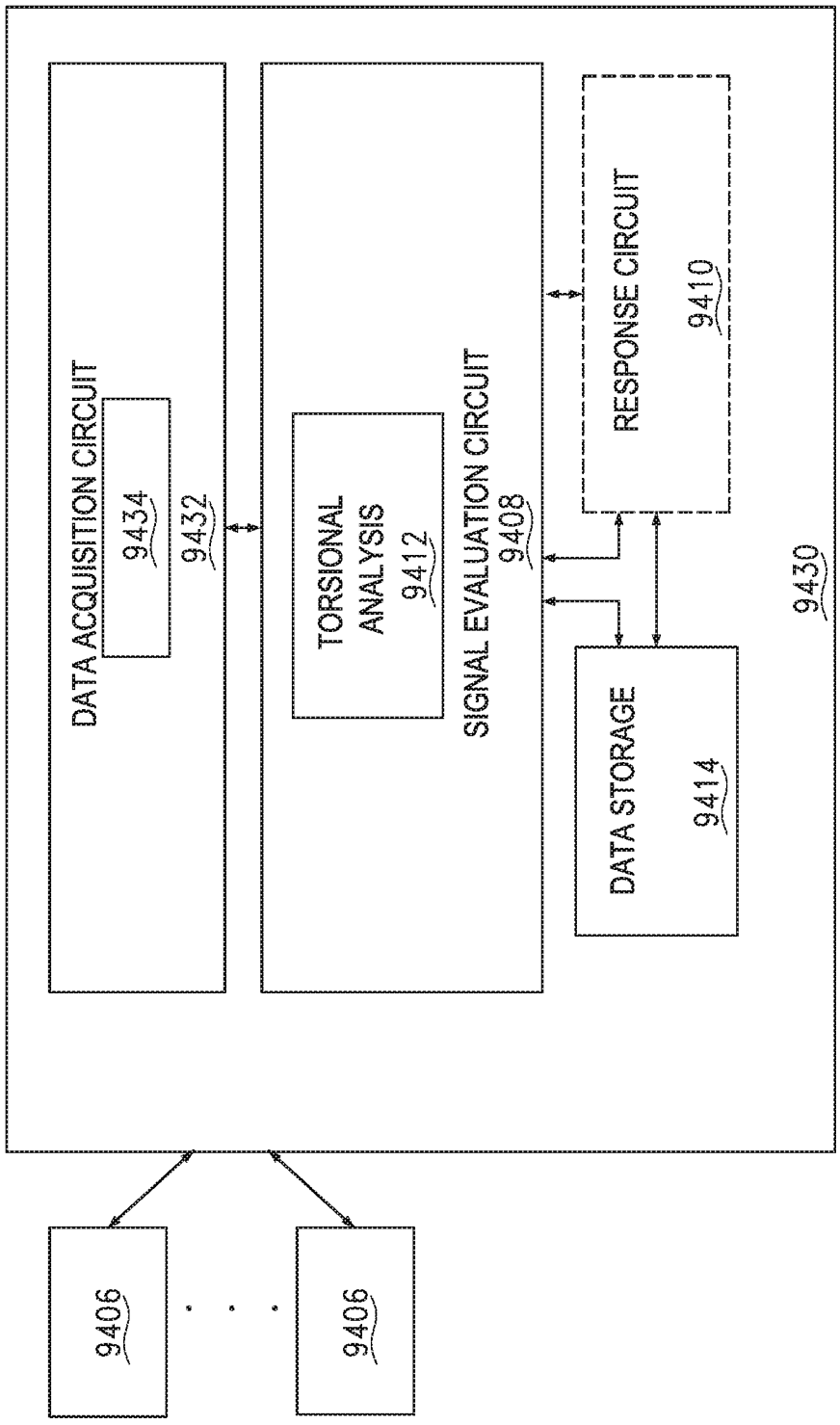
DATA ACQUISITION CIRCUIT
9434
9432
TORSIONAL ANALYSIS
9412
SIGNAL EVALUATION CIRCUIT
9408
RESPONSE CIRCUIT
9410
DATA STORAGE
9414
9430
9406
9406

FIG. 96

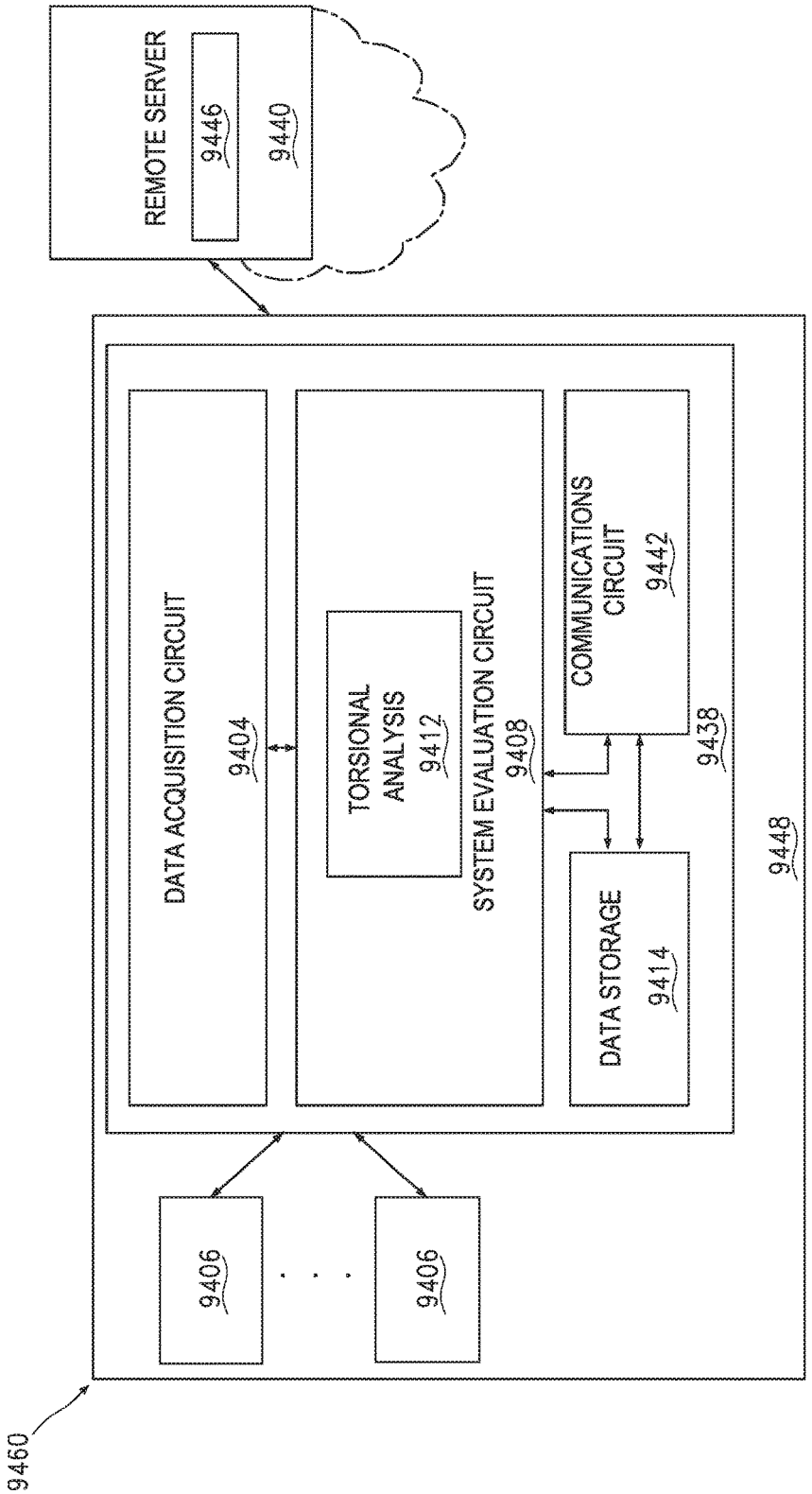
REMOTE SERVER
9446
9440
DATA ACQUISITION CIRCUIT
9404
TORSIONAL ANALYSIS
9412
SYSTEM EVALUATION CIRCUIT
9408
COMMUNICATIONS CIRCUIT
9442
9438
DATA STORAGE
9414
9448
9406
9406
9460

FIG. 97

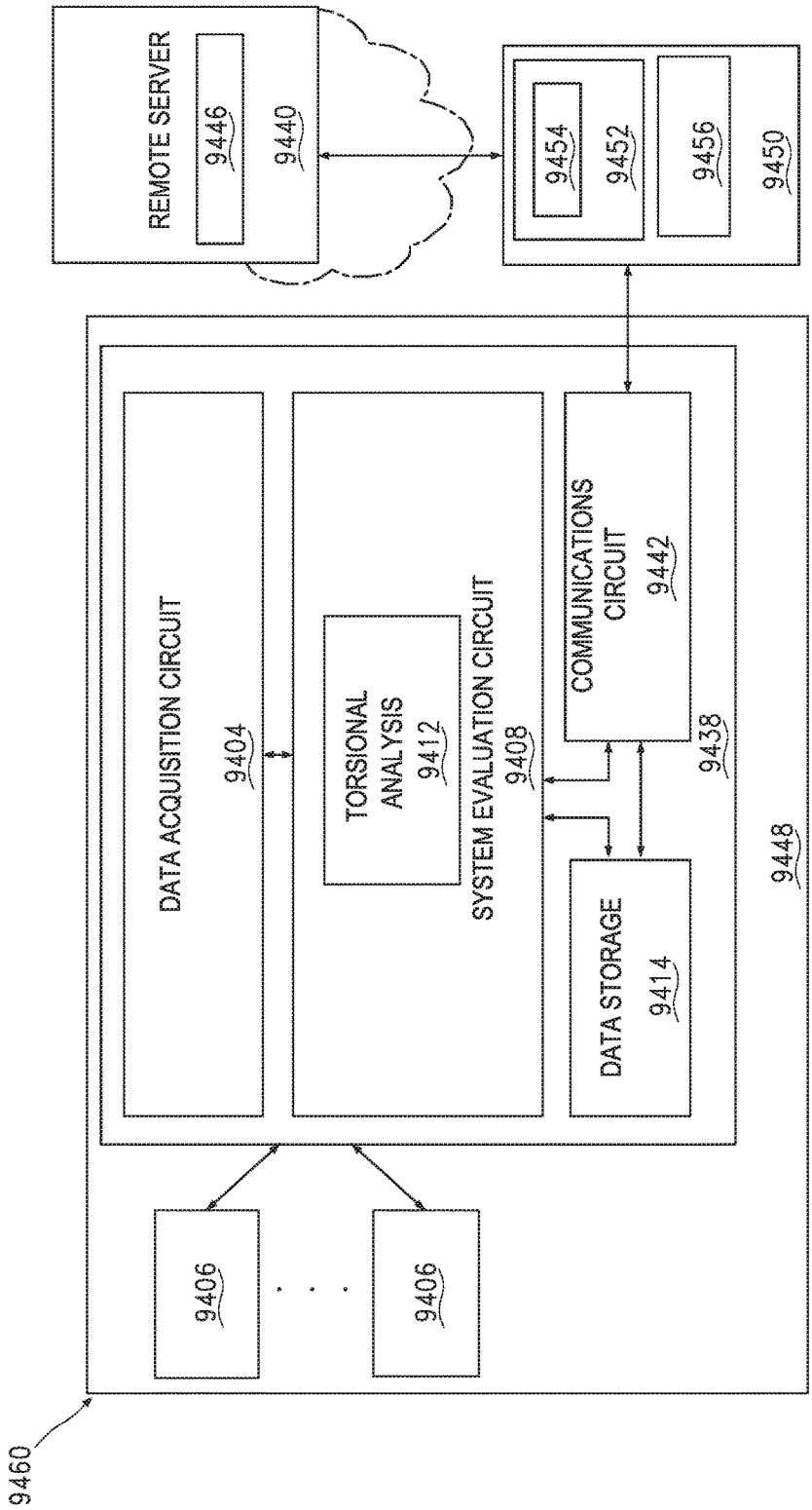
REMOTE SERVER
9446
9440
9454
9452
9456
9450
DATA ACQUISITION CIRCUIT
9404
TORSIONAL ANALYSIS
9412
SYSTEM EVALUATION CIRCUIT
9408
COMMUNICATIONS CIRCUIT
9442
9438
DATA STORAGE
9414
9448
9406
9406
9460

FIG. 98

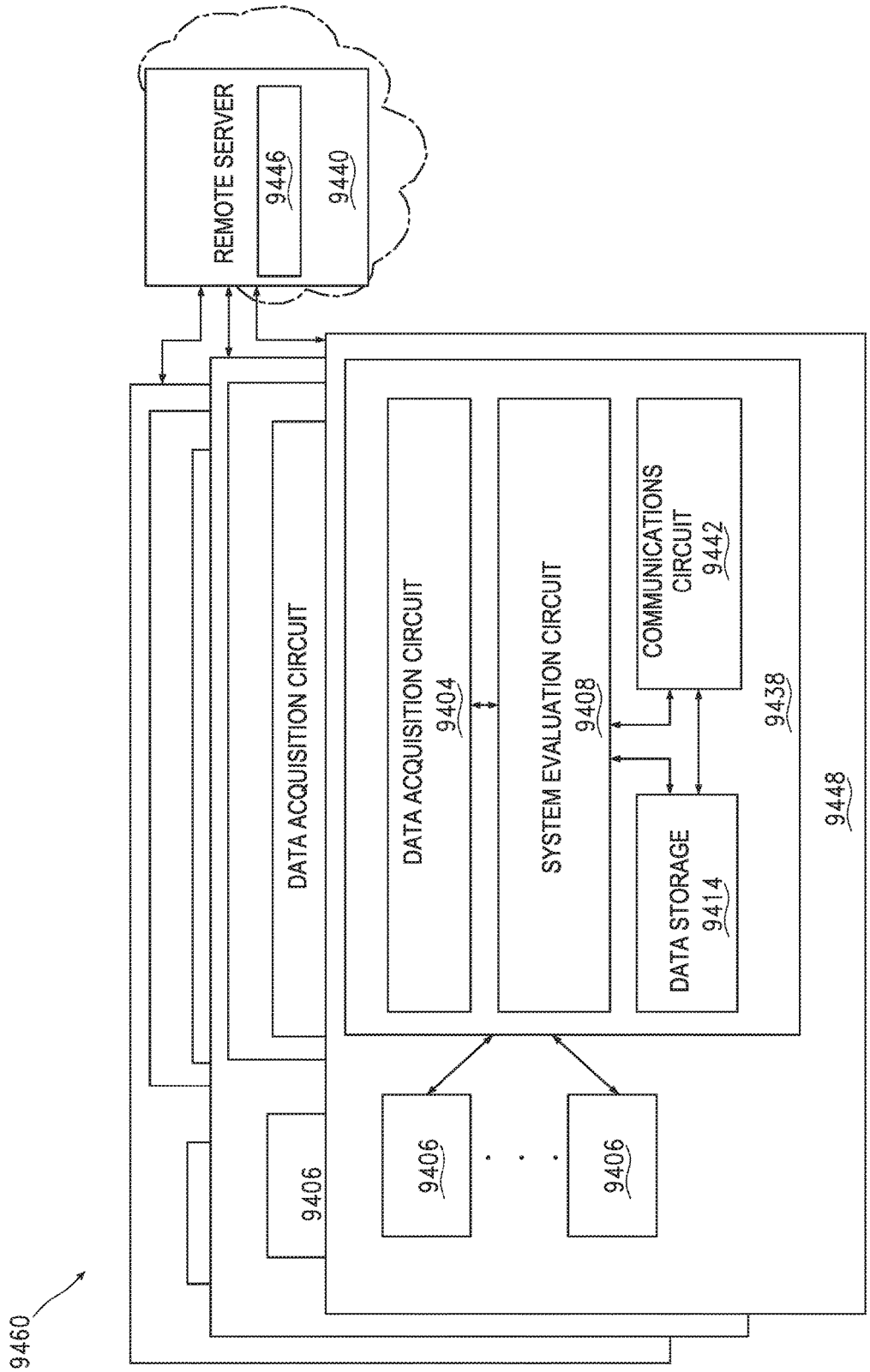
REMOTE SERVER
9446
9440
DATA ACQUISITION CIRCUIT
DATA ACQUISITION CIRCUIT
9404
SYSTEM EVALUATION CIRCUIT
9408
COMMUNICATIONS CIRCUIT
9442
DATA STORAGE
9414
9438
9448
9406
9406
9406
9460

FIG. 99

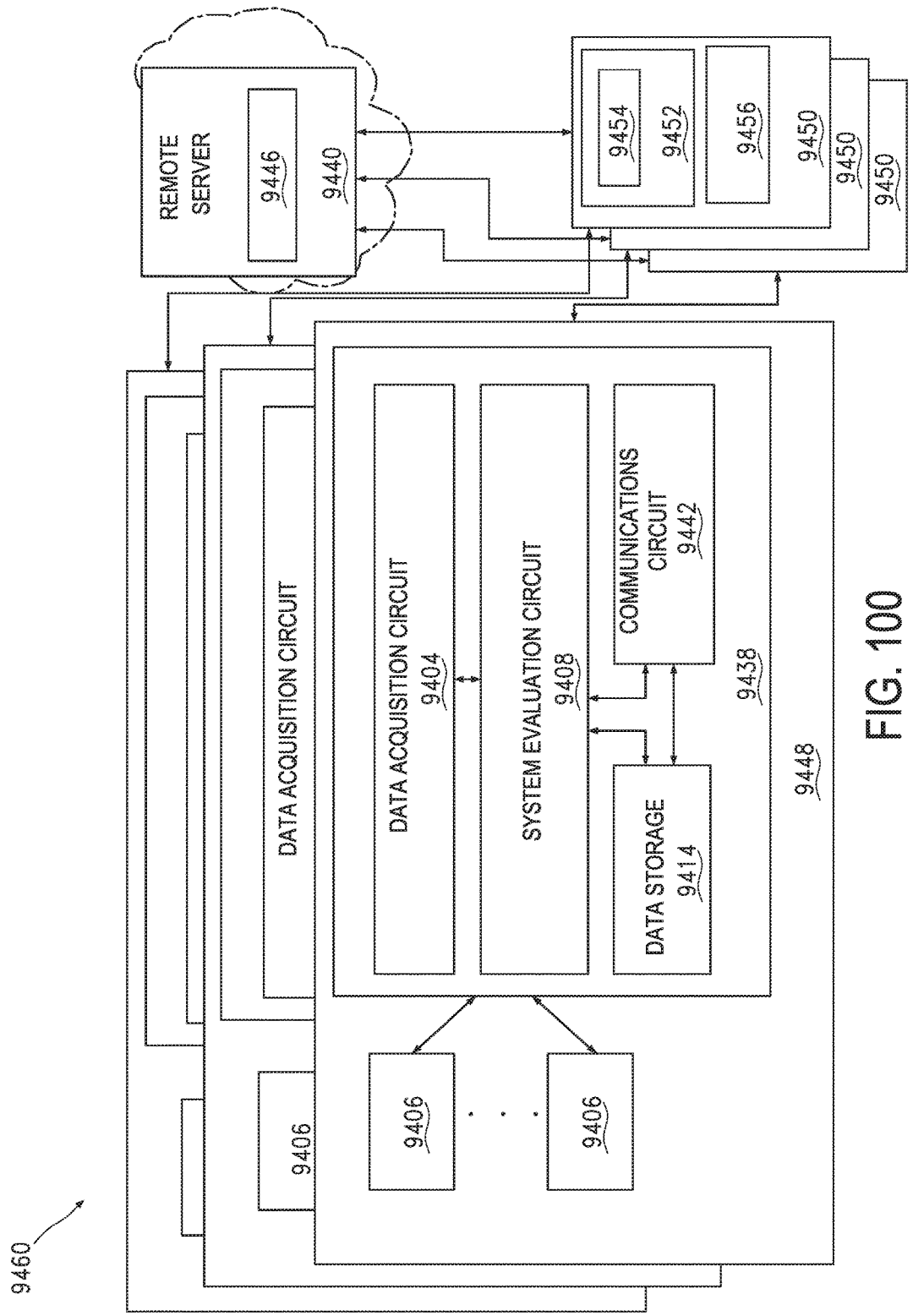
9460
REMOTE SERVER
9446
9440
9454
9452
9456
9450
9450
9450
9448
9438
DATA ACQUISITION CIRCUIT
DATA ACQUISITION CIRCUIT
9404
SYSTEM EVALUATION CIRCUIT
9408
COMMUNICATIONS CIRCUIT
9442
DATA STORAGE
9414
9406
9406
9406

FIG. 100

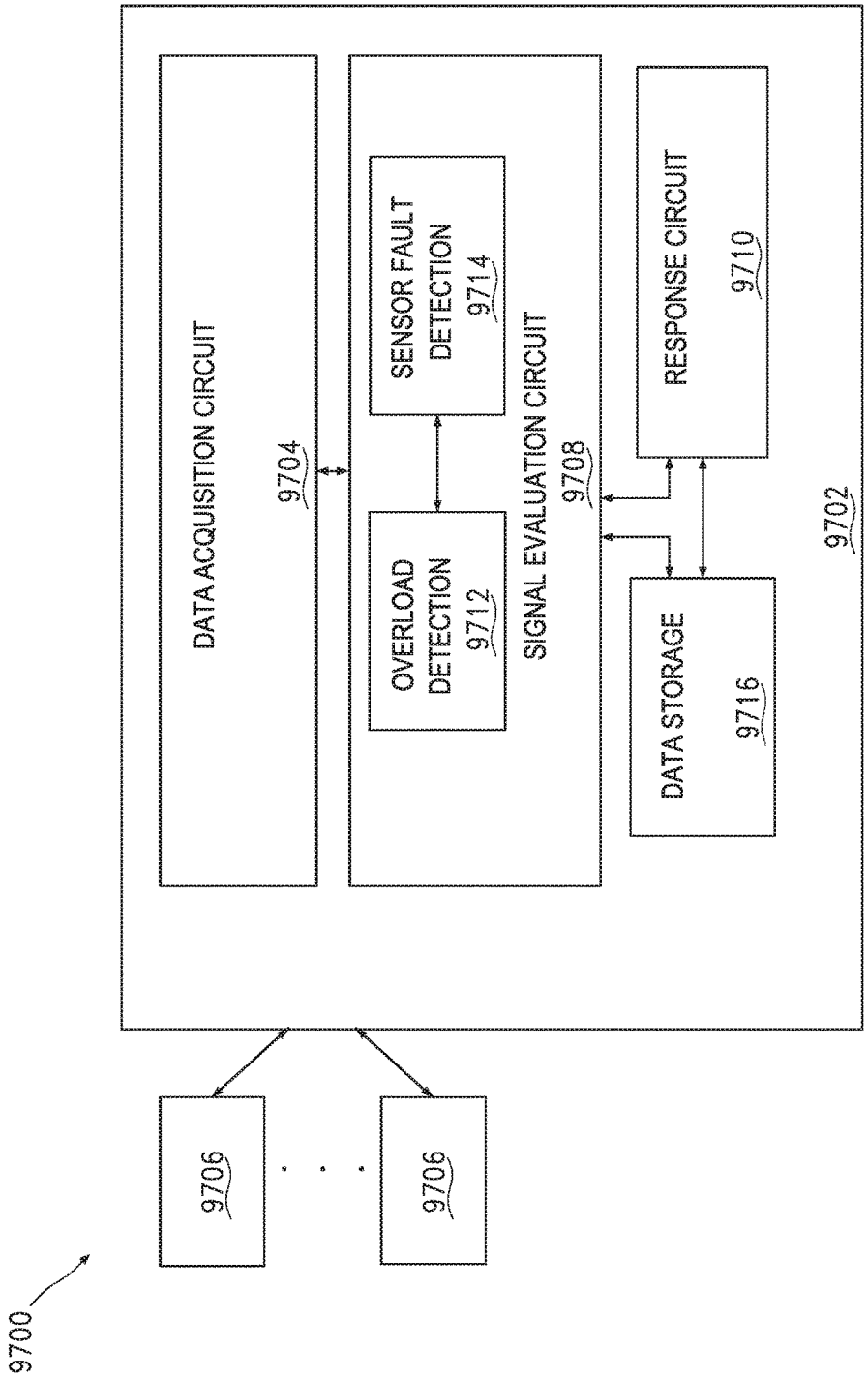
9700
9706
9706
9702
DATA ACQUISITION CIRCUIT
9704
SIGNAL EVALUATION CIRCUIT
9708
SENSOR FAULT DETECTION
9714
OVERLOAD DETECTION
9712
RESPONSE CIRCUIT
9710
DATA STORAGE
9716

FIG. 101

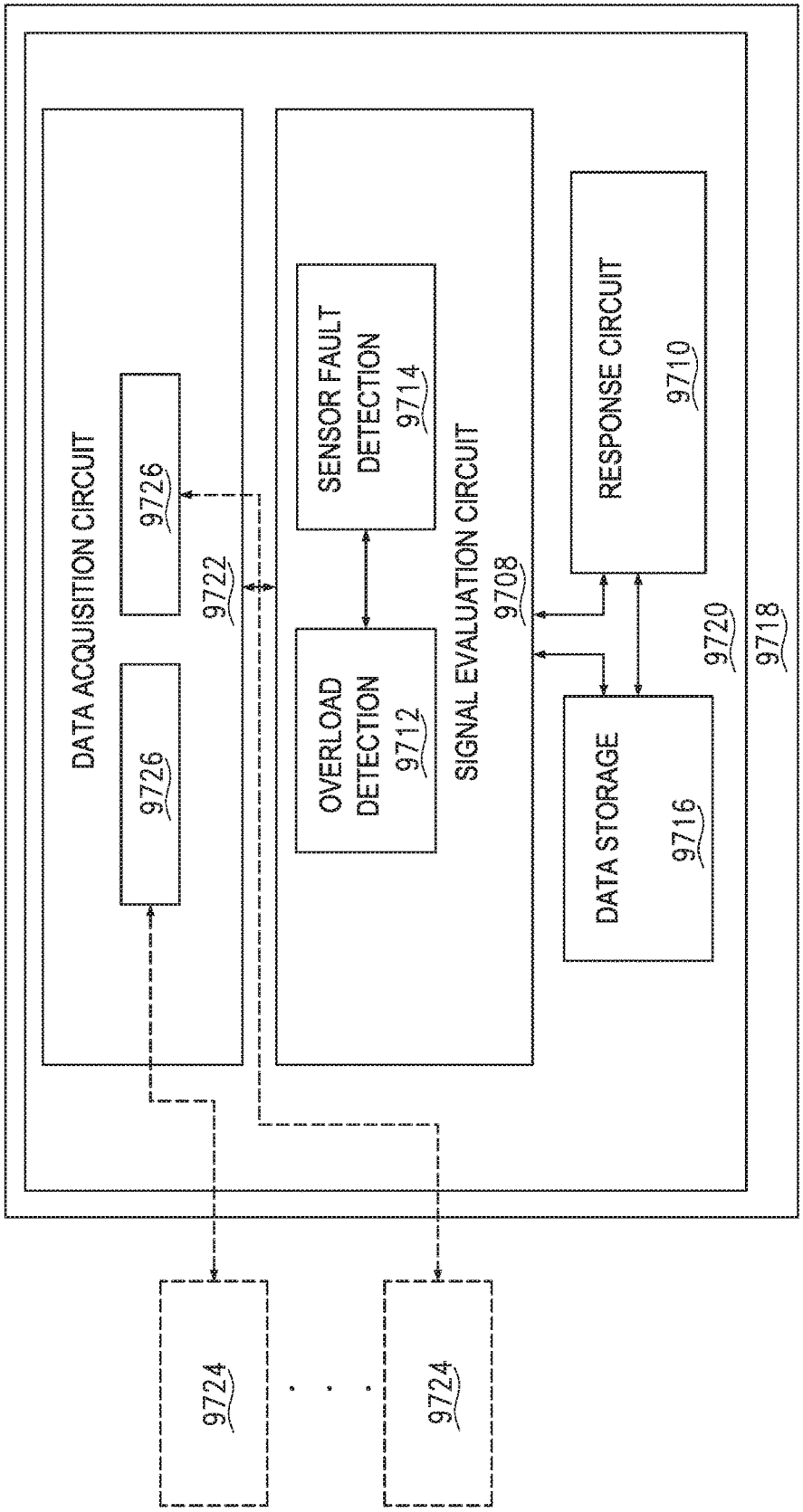
DATA ACQUISITION CIRCUIT
9726
9726
9722
SIGNAL EVALUATION CIRCUIT
9708
SENSOR FAULT DETECTION 9714
OVERLOAD DETECTION 9712
RESPONSE CIRCUIT 9710
DATA STORAGE 9716
9720
9718
9724
9724

FIG. 102

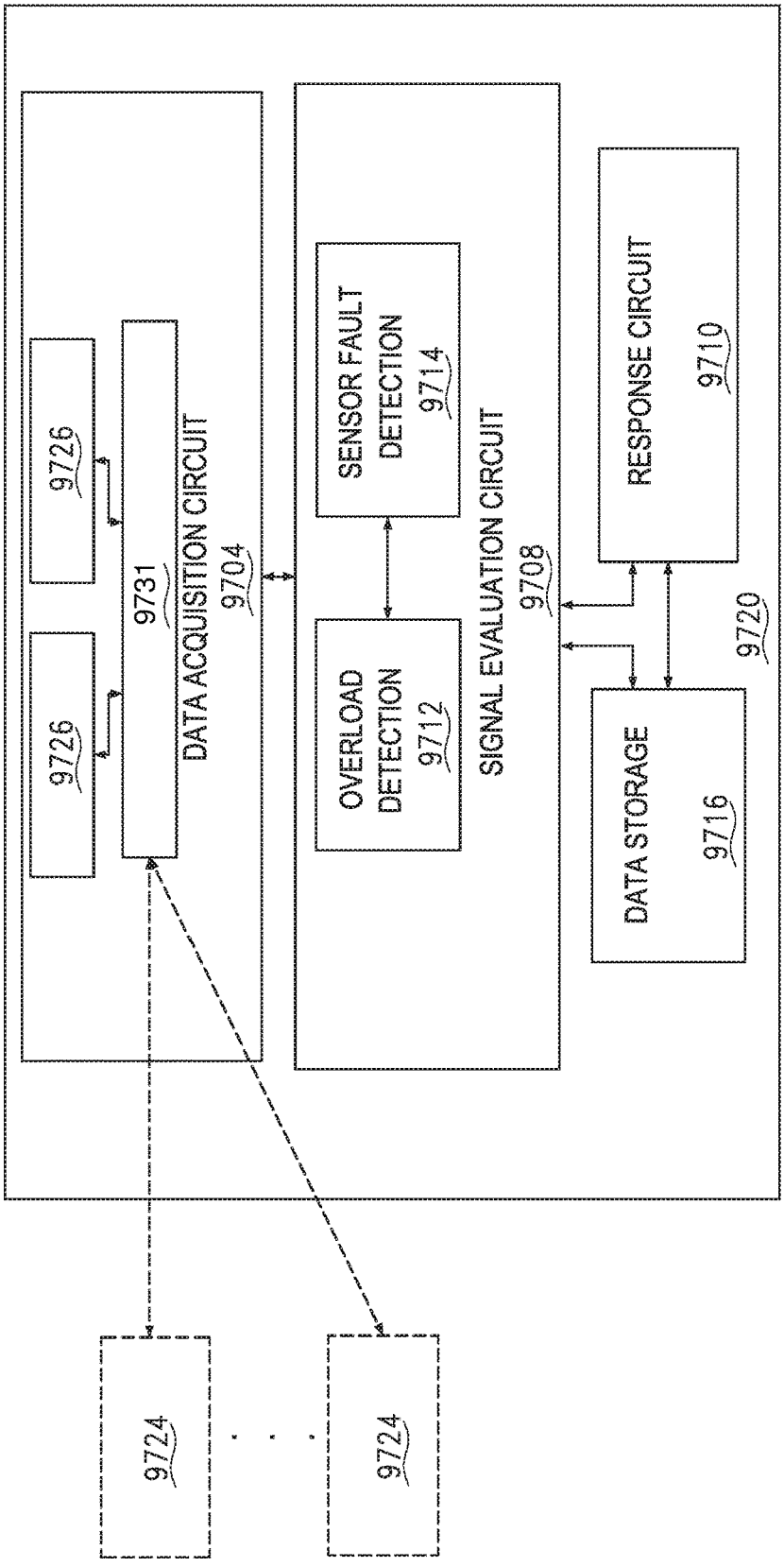
9726
9726
9731
DATA ACQUISITION CIRCUIT
9704
SENSOR FAULT DETECTION
9714
OVERLOAD DETECTION
9712
SIGNAL EVALUATION CIRCUIT
9708
RESPONSE CIRCUIT
9710
9720
DATA STORAGE
9716
9724
9724

FIG. 103

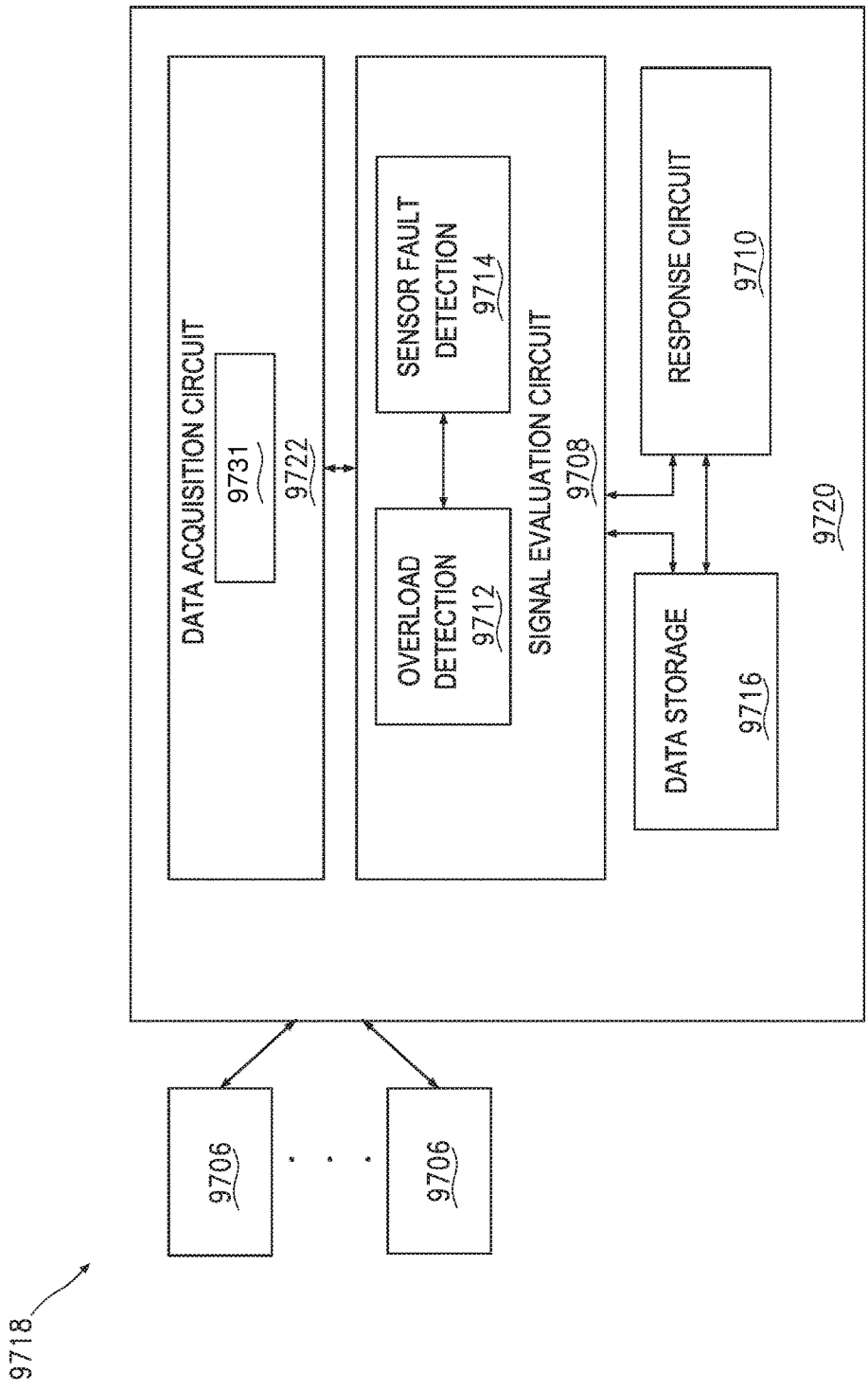
9718
9706
9706
9720
DATA ACQUISITION CIRCUIT
9731
9722
SIGNAL EVALUATION CIRCUIT
9708
SENSOR FAULT DETECTION
9714
OVERLOAD DETECTION
9712
RESPONSE CIRCUIT
9710
DATA STORAGE
9716

FIG. 104

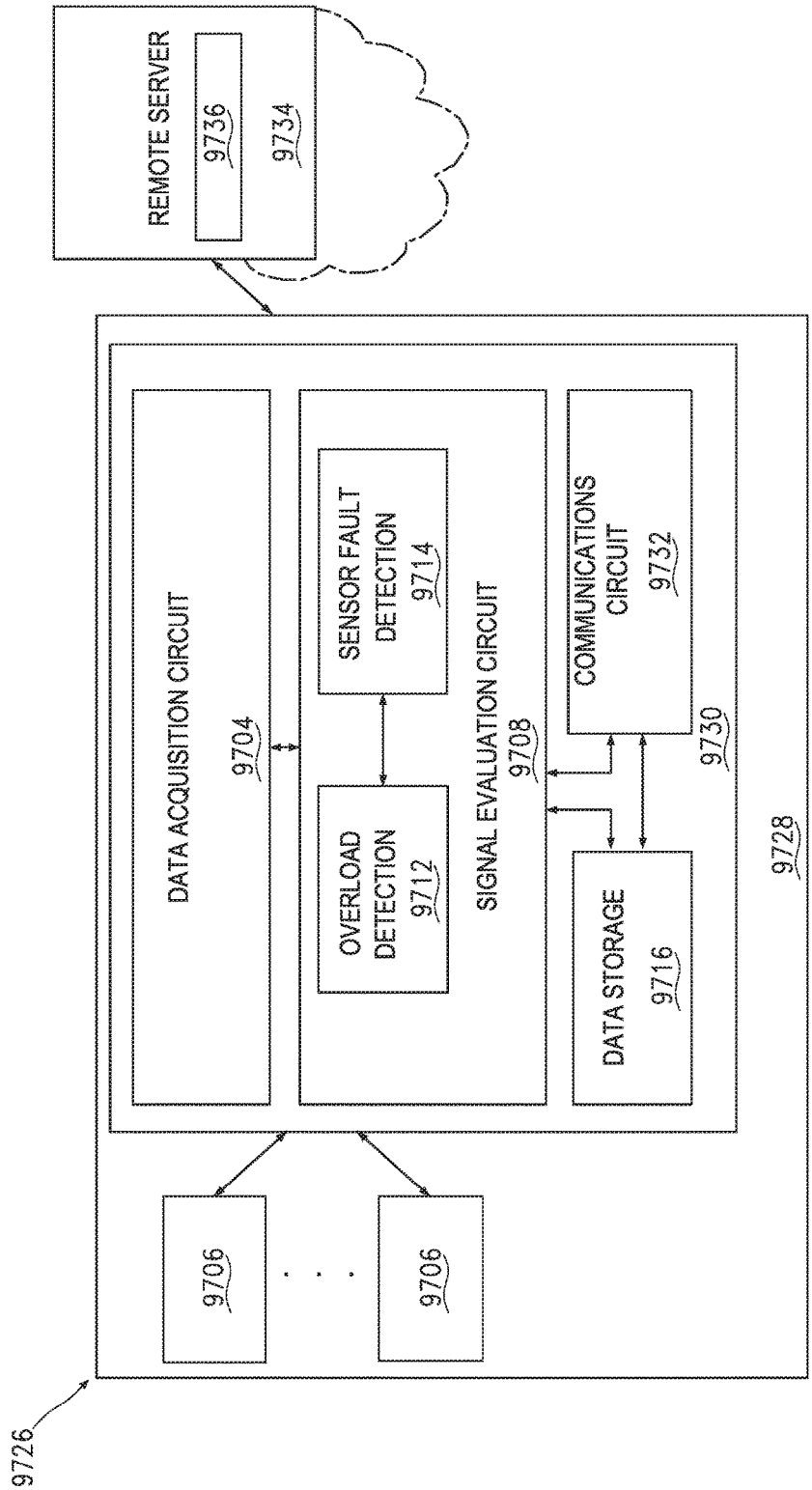
REMOTE SERVER
9736
9734
DATA ACQUISITION CIRCUIT
9704
SENSOR FAULT DETECTION
9714
OVERLOAD DETECTION
9712
SIGNAL EVALUATION CIRCUIT
9708
COMMUNICATIONS CIRCUIT
9732
9730
DATA STORAGE
9716
9728
9706
9706
9726

FIG. 105

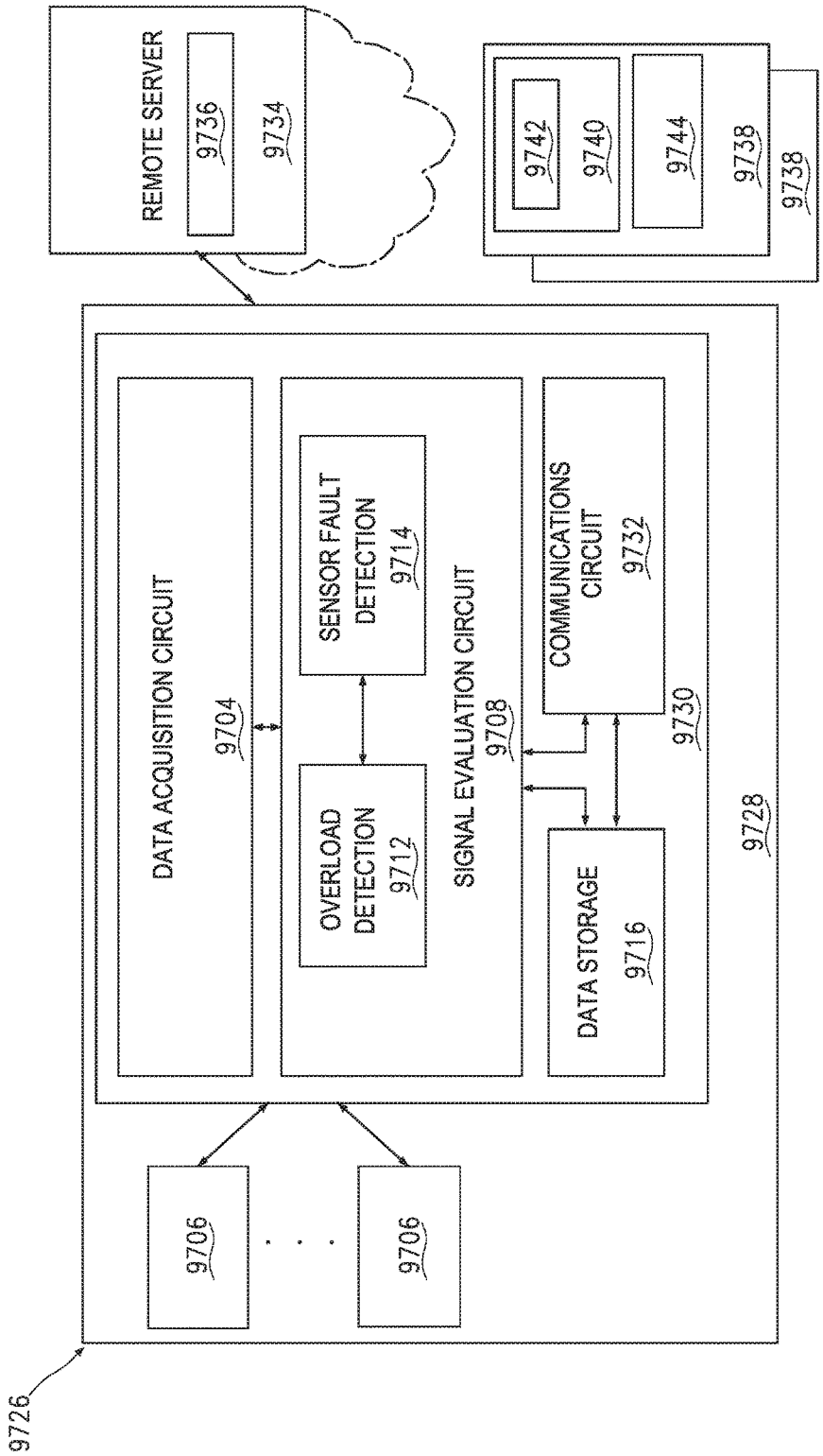
REMOTE SERVER
9736
9734
9742
9740
9744
9738
9738
DATA ACQUISITION CIRCUIT
9704
SENSOR FAULT DETECTION
9714
OVERLOAD DETECTION
9712
SIGNAL EVALUATION CIRCUIT
9708
COMMUNICATIONS CIRCUIT
9732
9730
DATA STORAGE
9716
9728
9706
9706
9726

FIG. 106

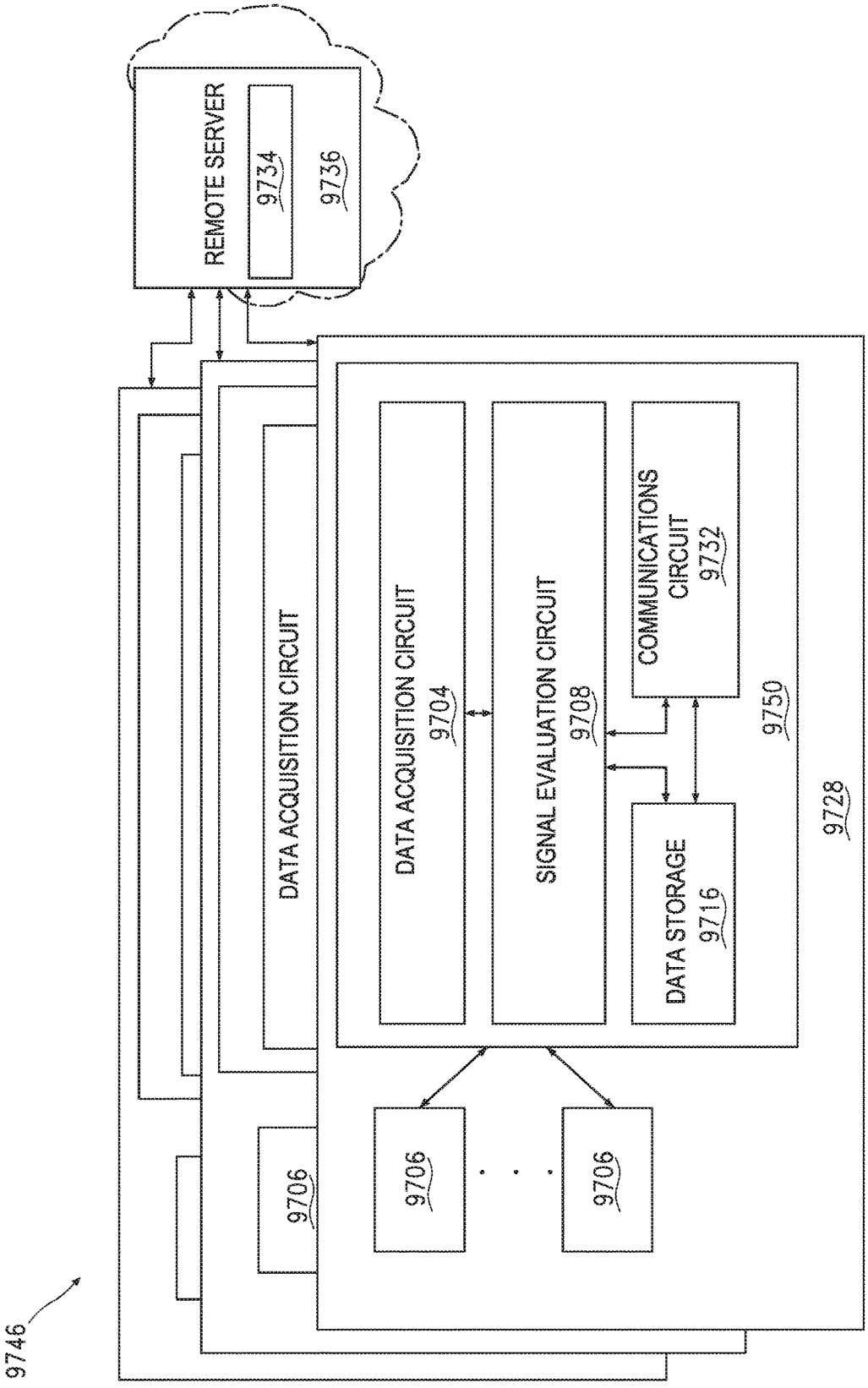
REMOTE SERVER
9734
9736
DATA ACQUISITION CIRCUIT
DATA ACQUISITION CIRCUIT
9704
SIGNAL EVALUATION CIRCUIT
9708
COMMUNICATIONS CIRCUIT
9732
DATA STORAGE
9716
9750
9728
9706
9706
9706
9746

FIG. 107

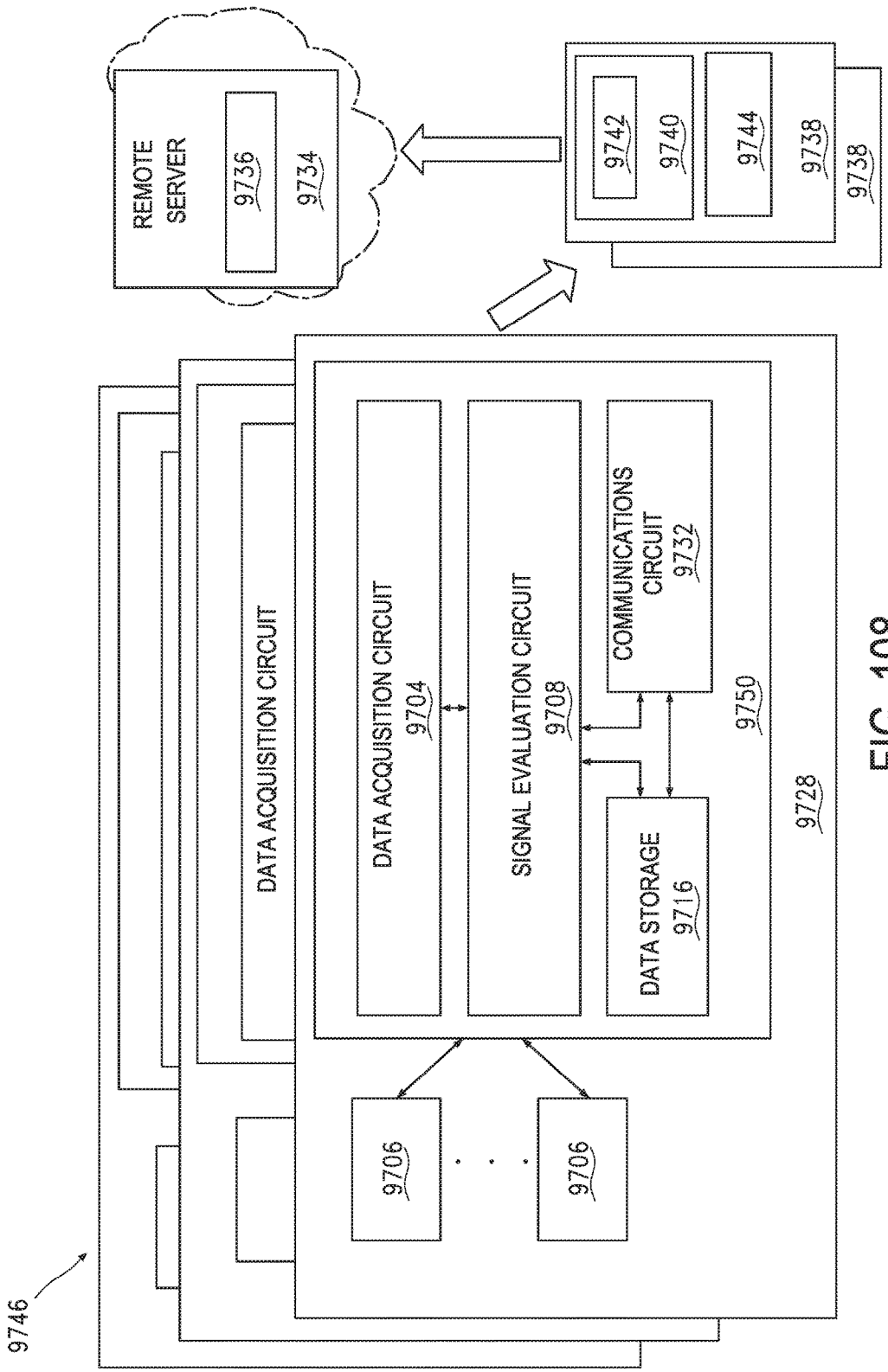
REMOTE SERVER
9736
9734
9742
9740
9744
9738
9738
9746
DATA ACQUISITION CIRCUIT
DATA ACQUISITION CIRCUIT 9704
SIGNAL EVALUATION CIRCUIT 9708
COMMUNICATIONS CIRCUIT 9732
DATA STORAGE 9716
9750
9728
9706
9706

FIG. 108

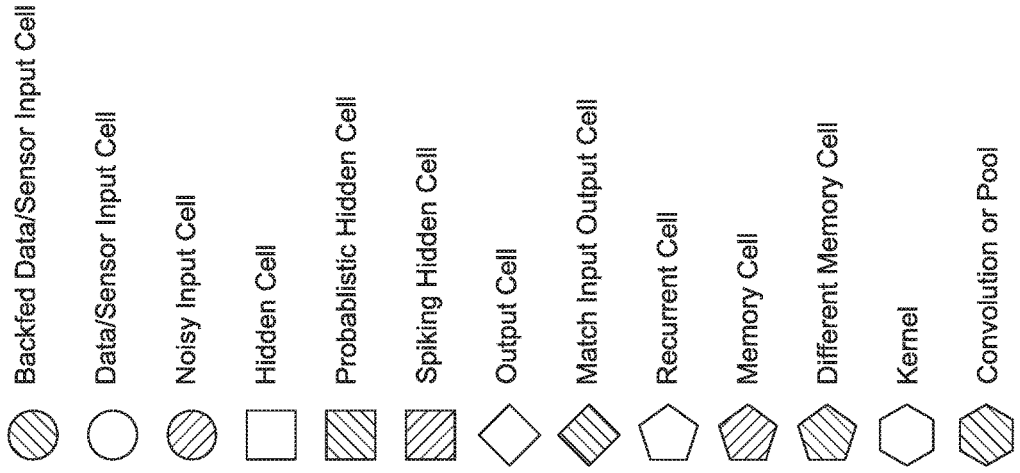
Backfed Data/Sensor Input Cell
Data/Sensor Input Cell
Noisy Input Cell
Hidden Cell
Probablistic Hidden Cell
Spiking Hidden Cell
Output Cell
Match Input Output Cell
Recurrent Cell
Memory Cell
Different Memory Cell
Kernel
Convolution or Pool

FIG. 109

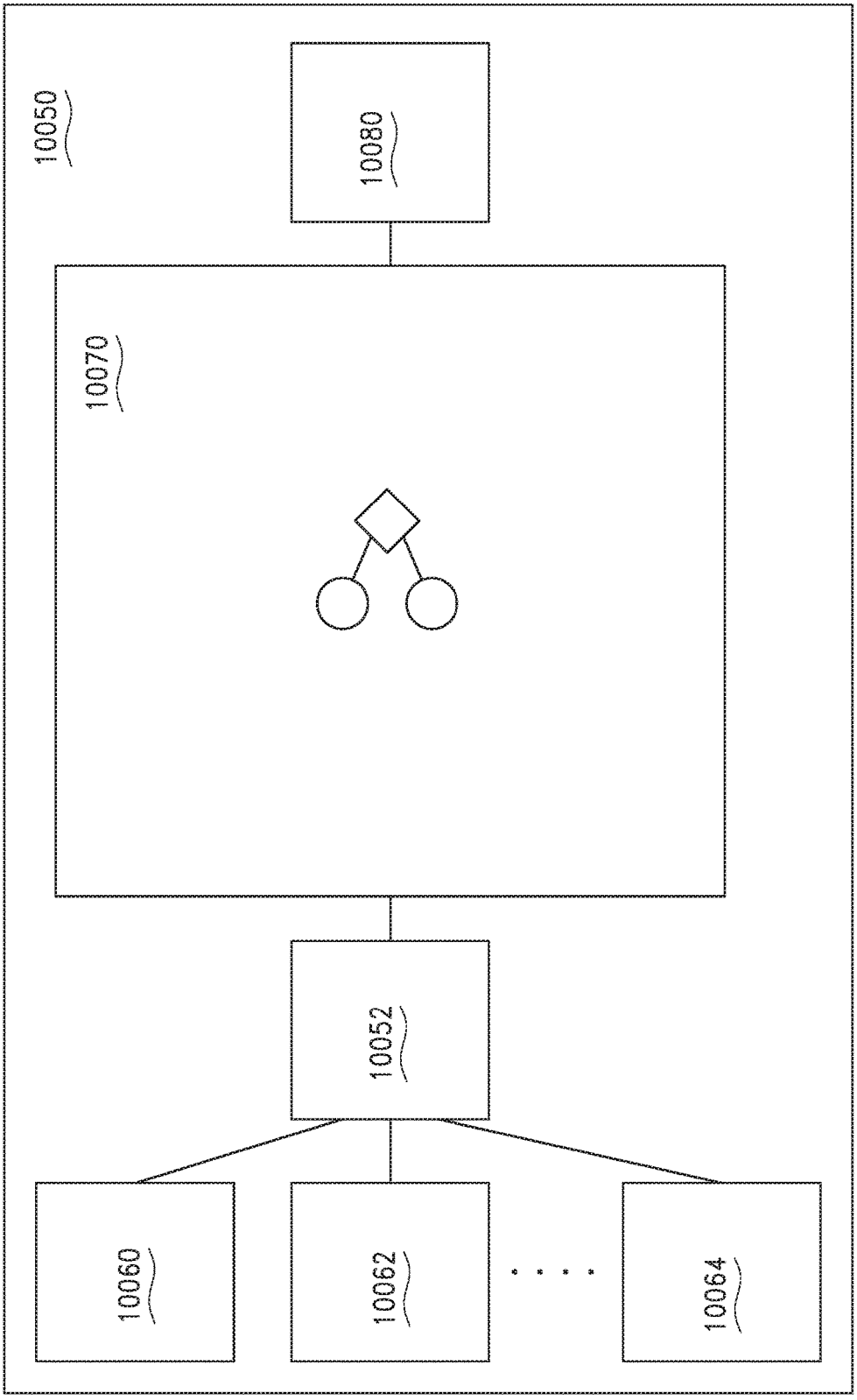


FIG. 110

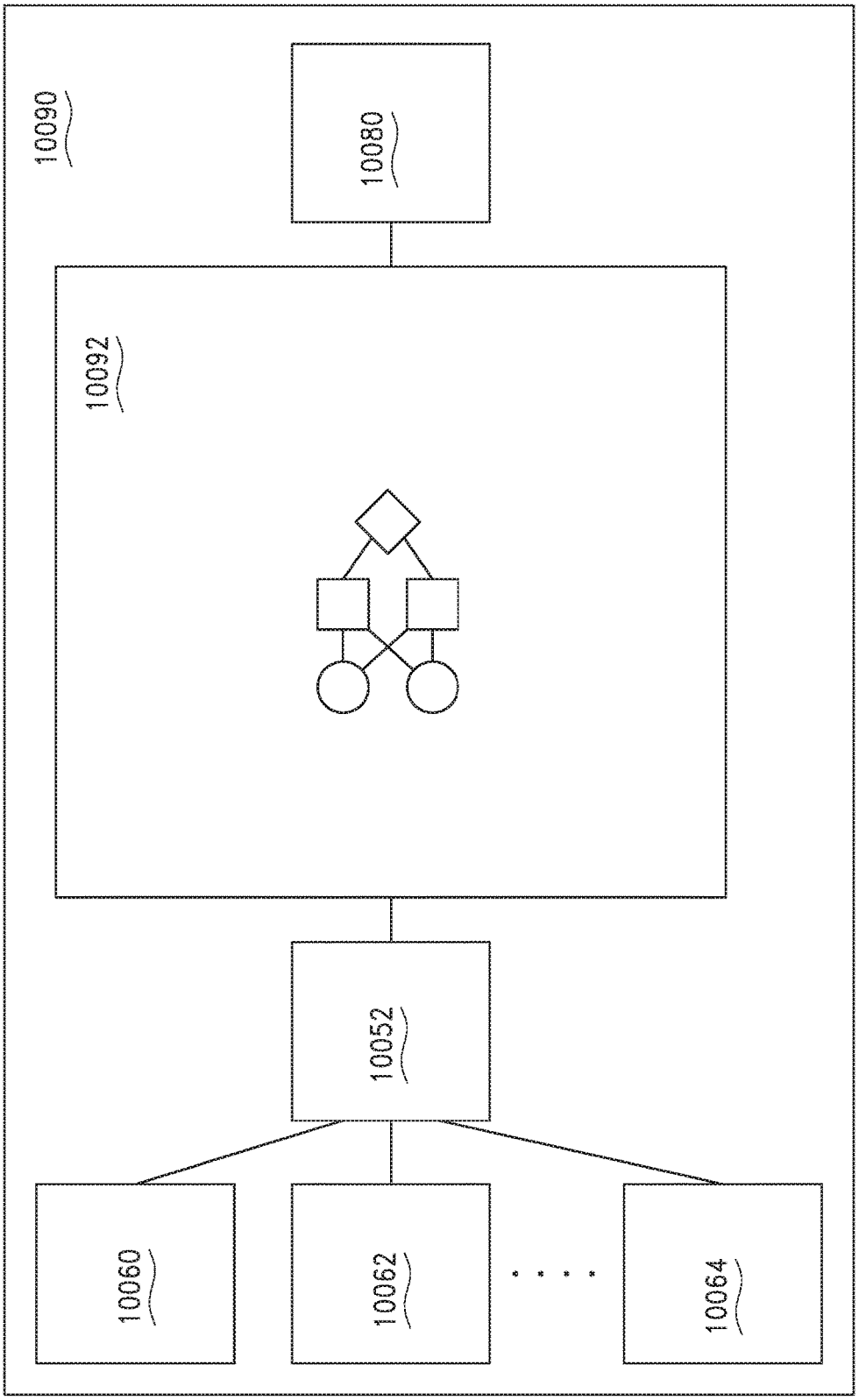


FIG. 111

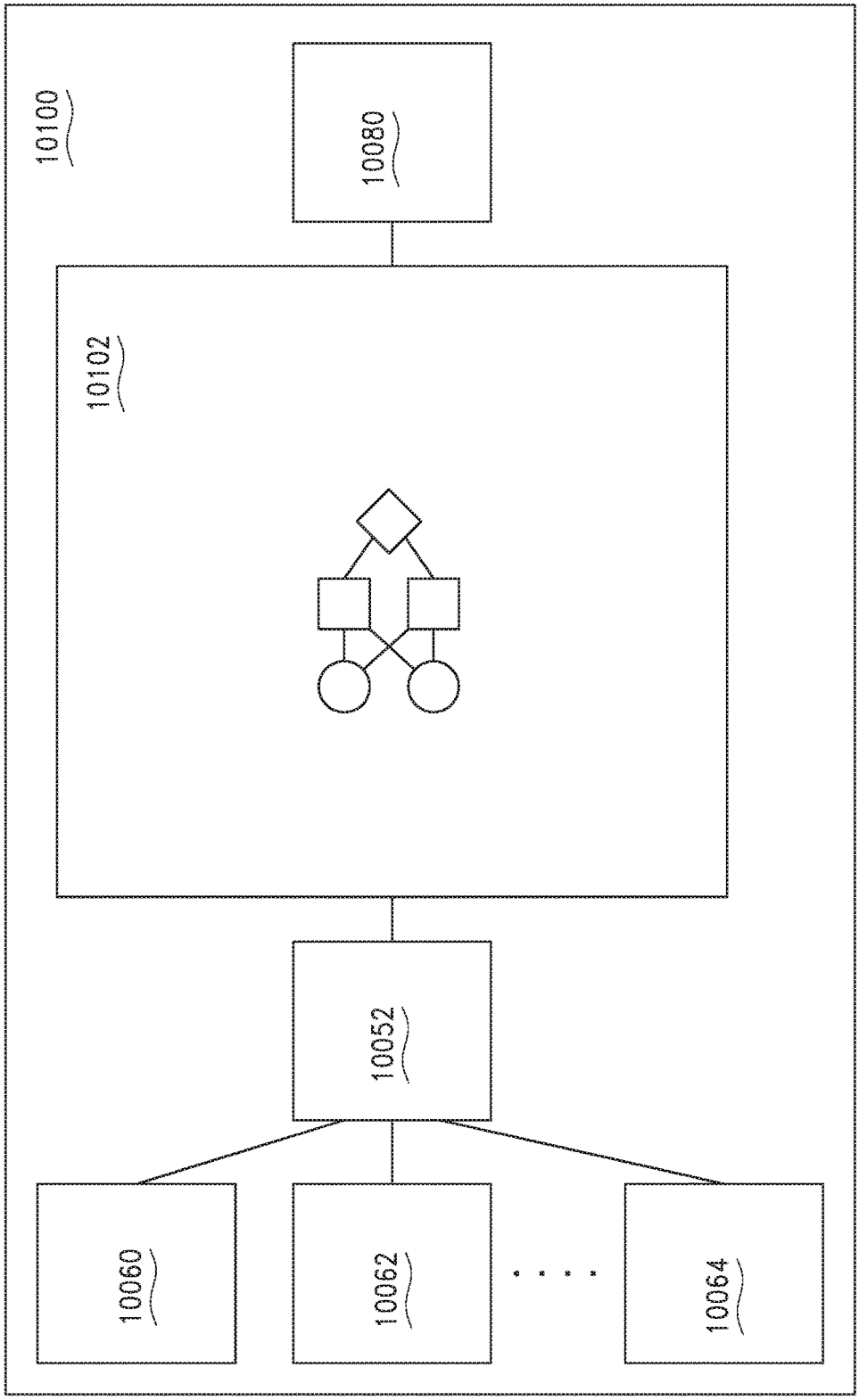


FIG. 112

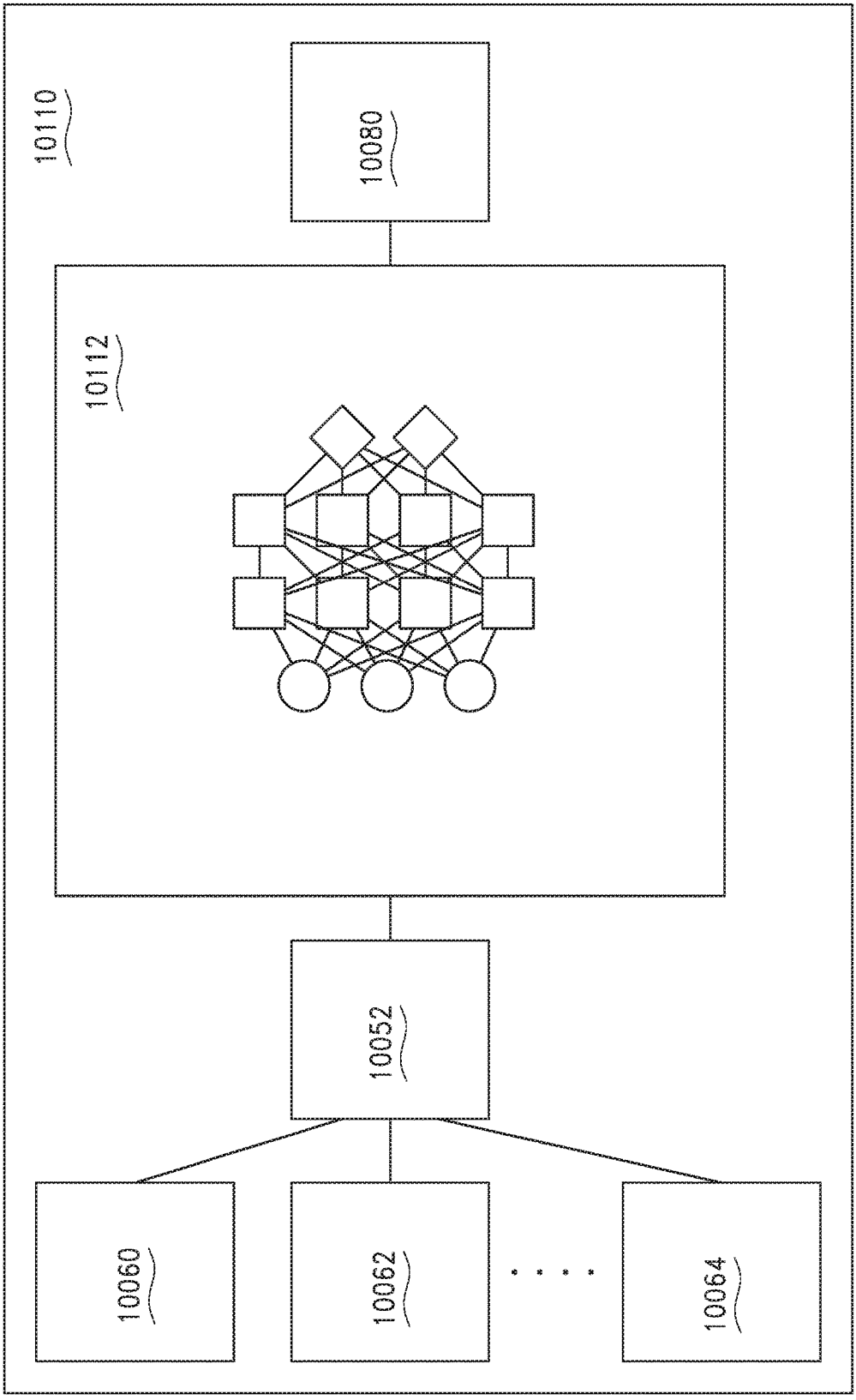


FIG. 113

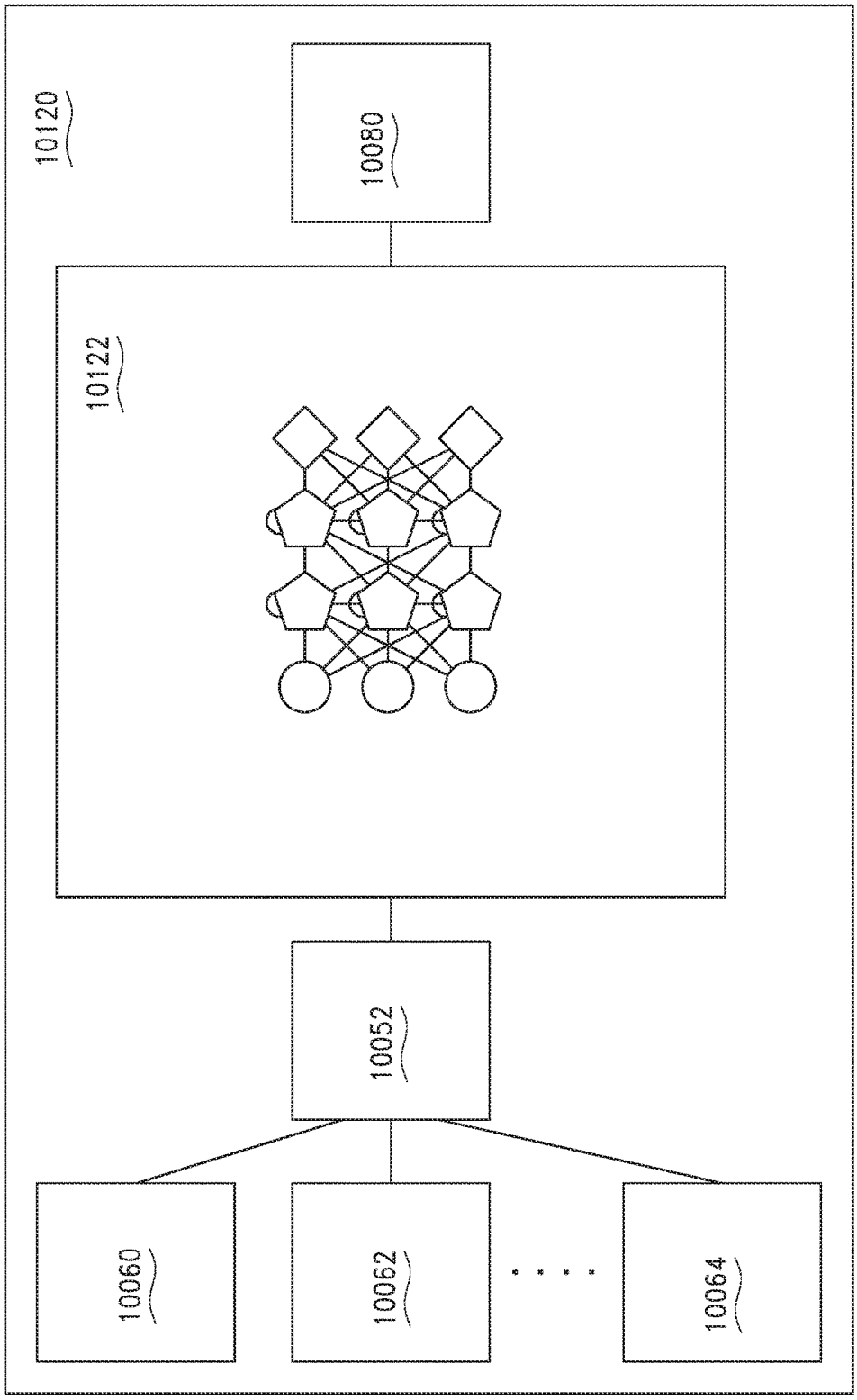


FIG. 114

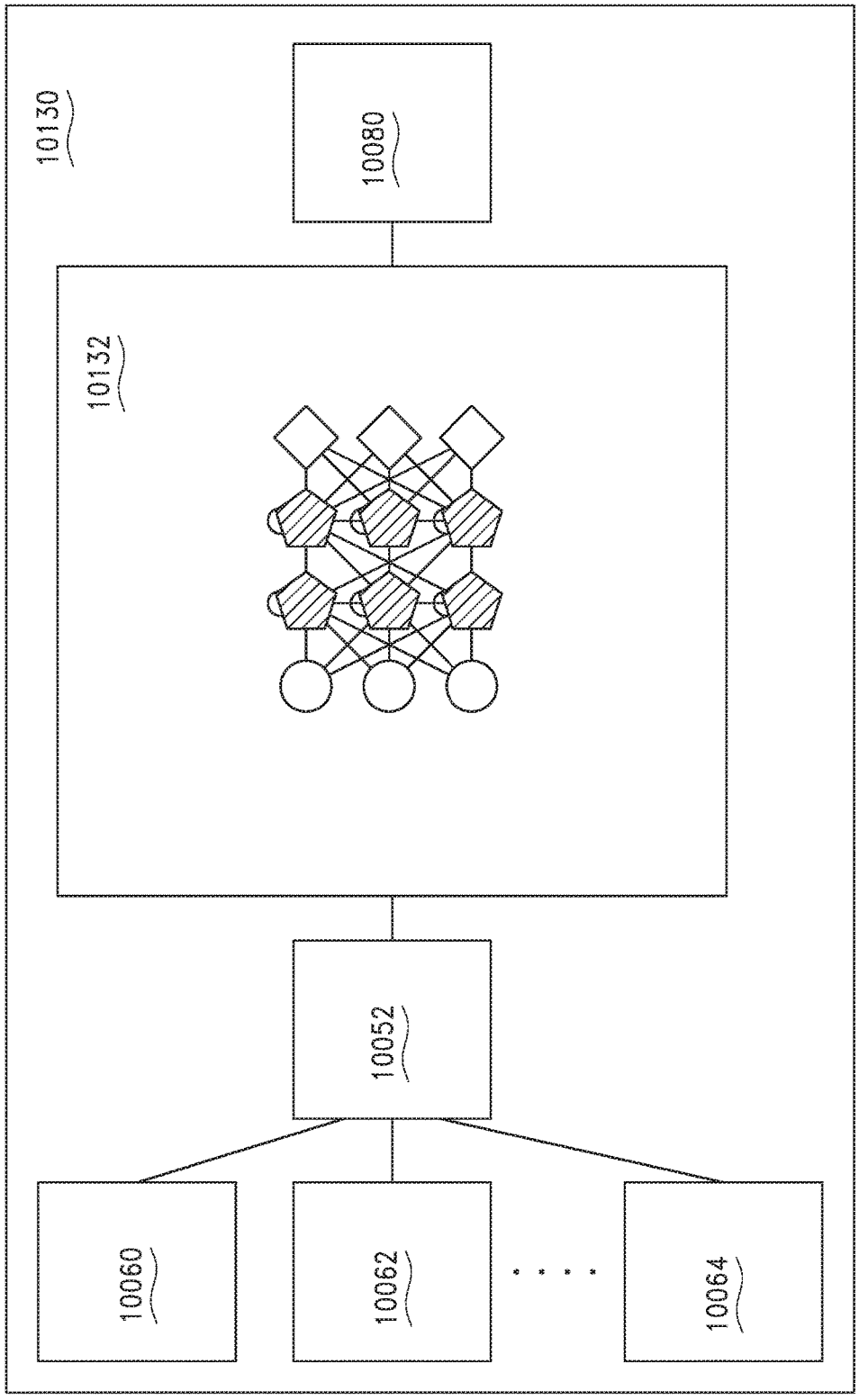


FIG. 115

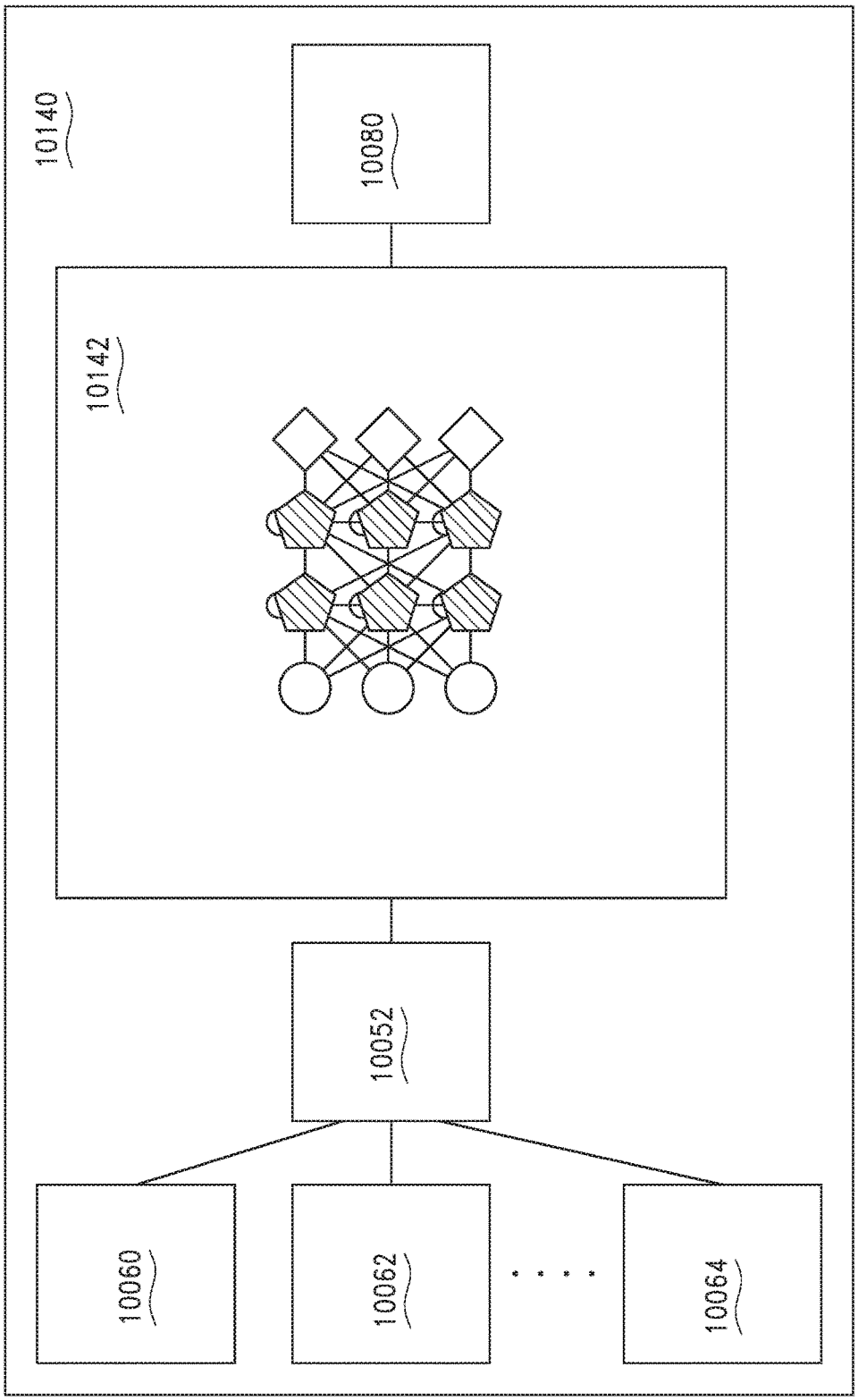


FIG. 116

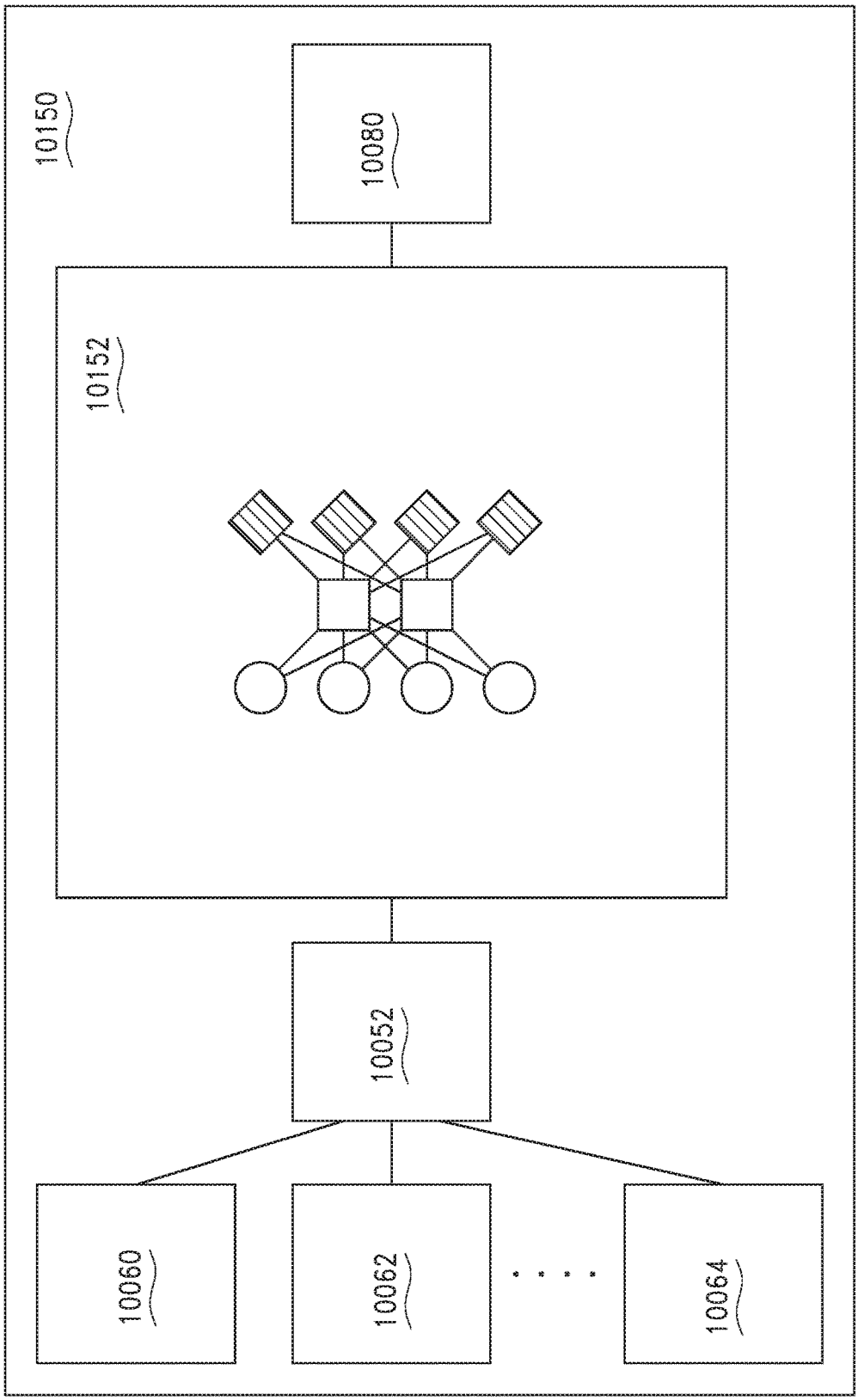


FIG. 117

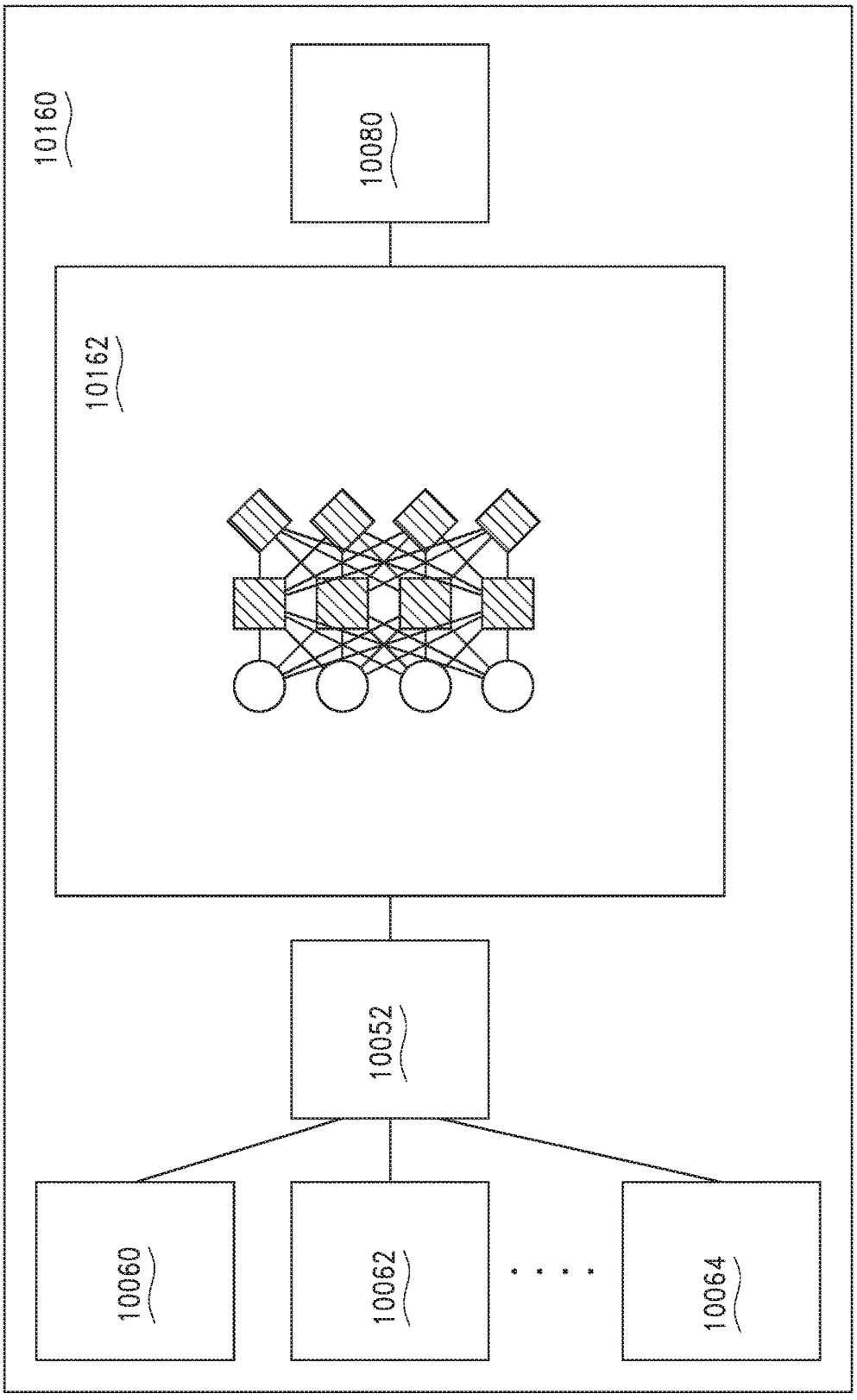


FIG. 118

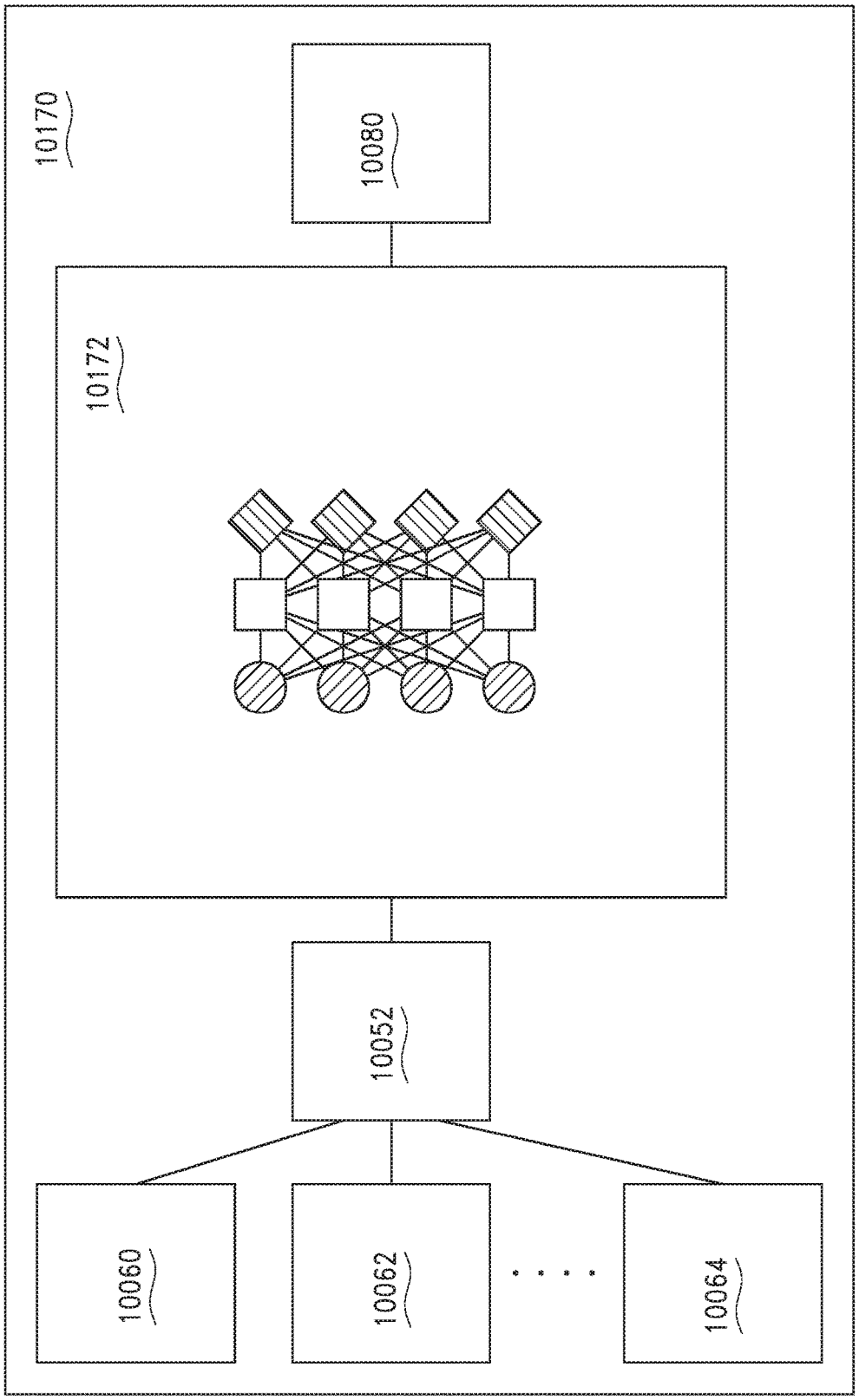


FIG. 119

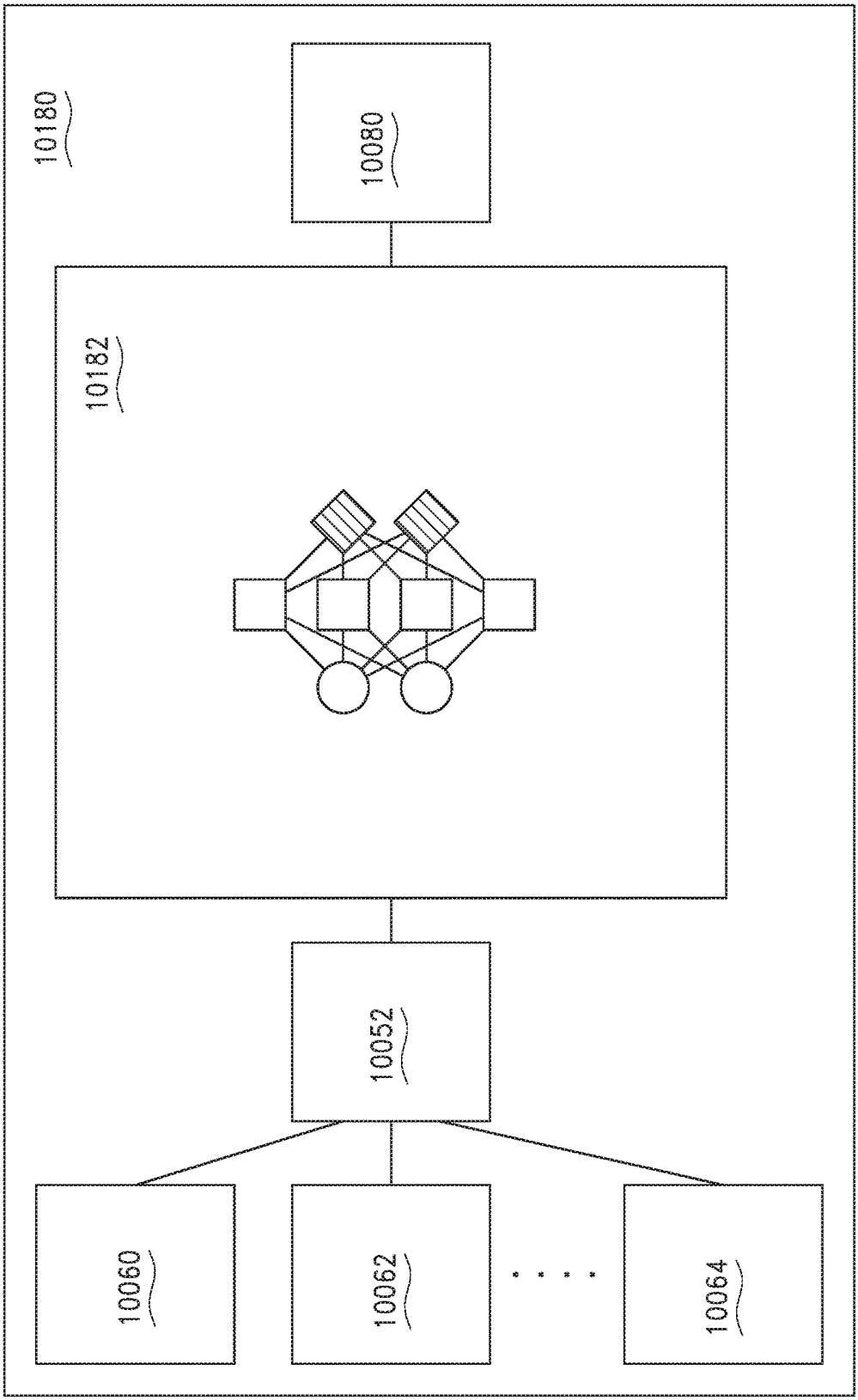


FIG. 120

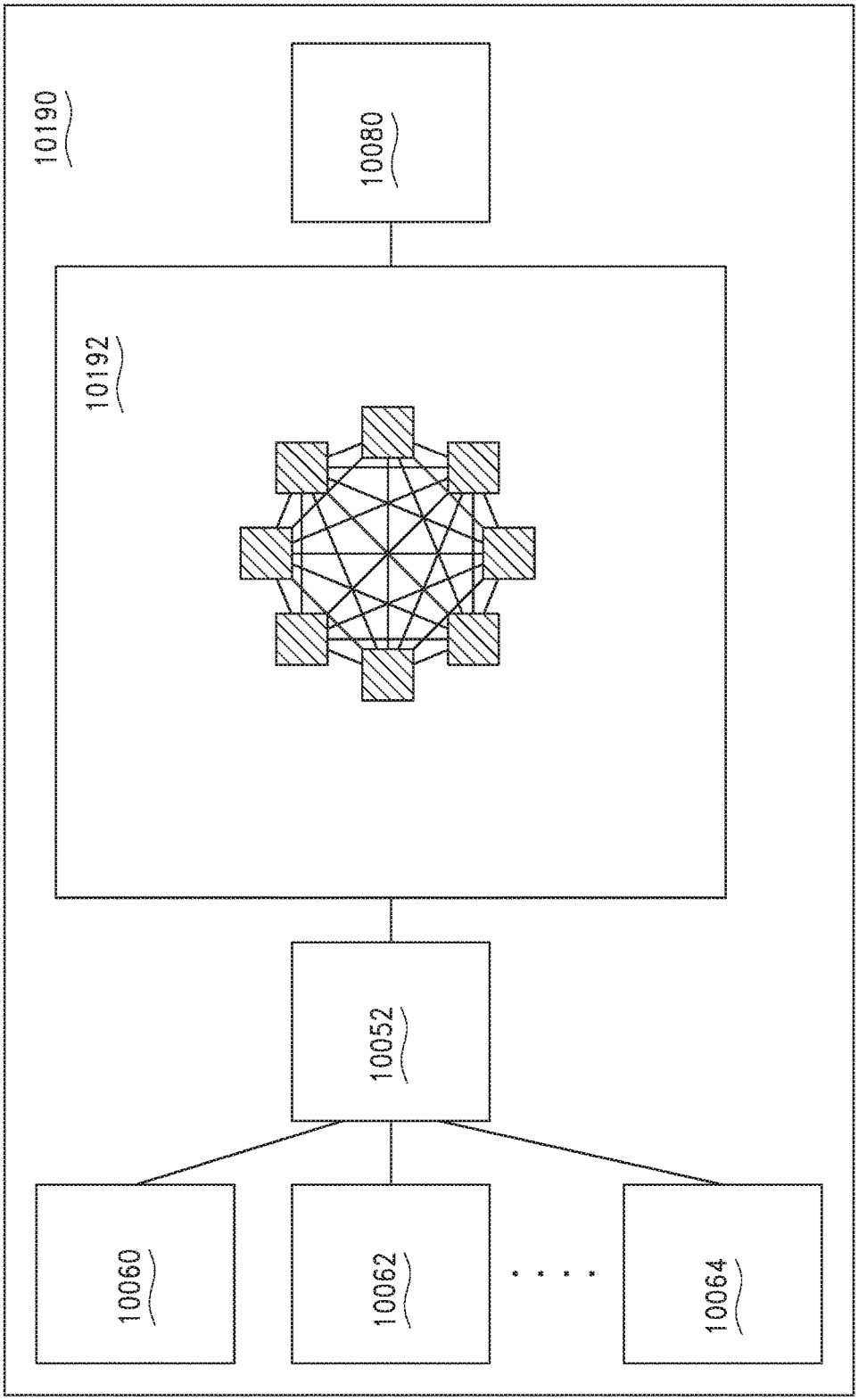


FIG. 121

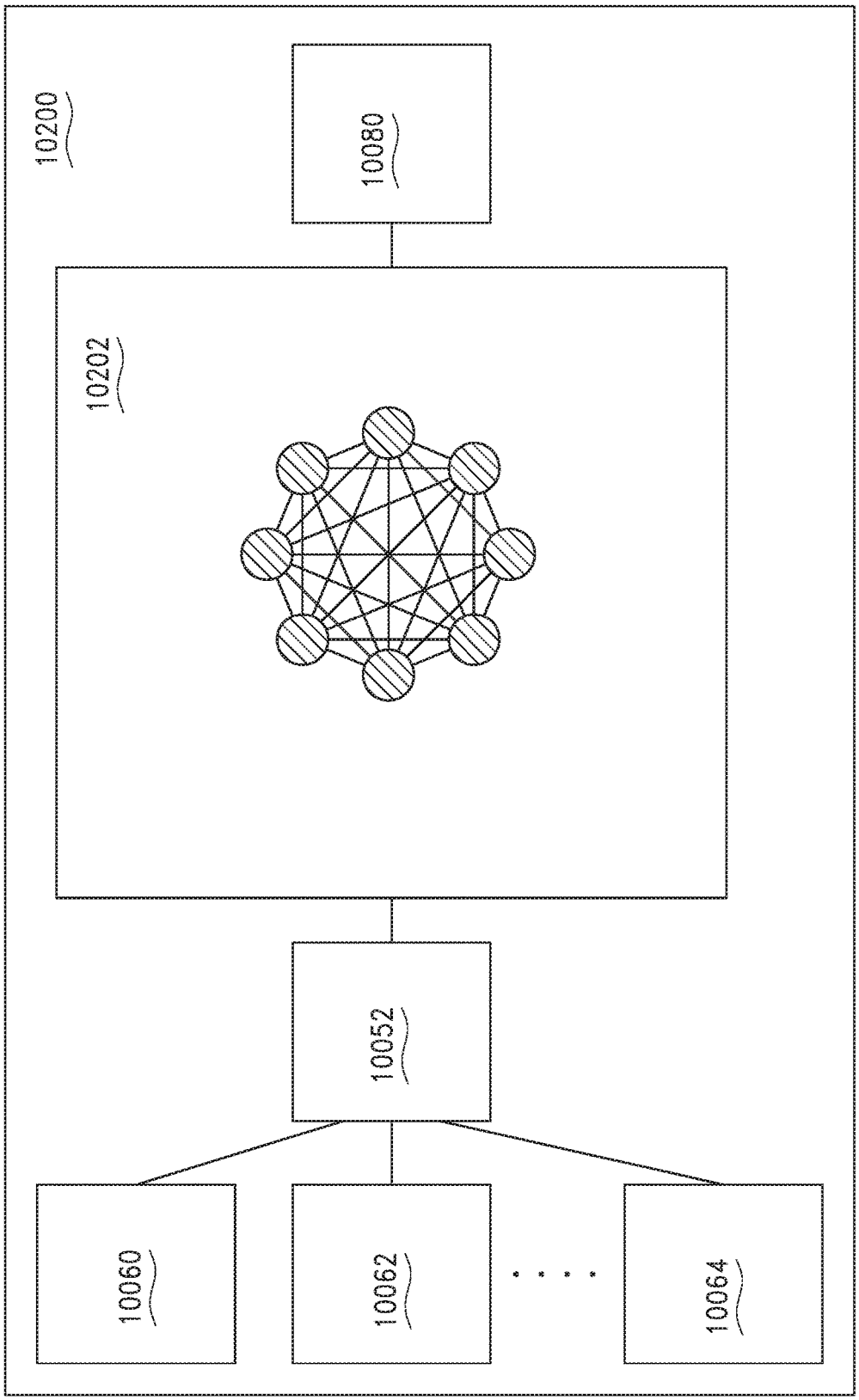


FIG. 122

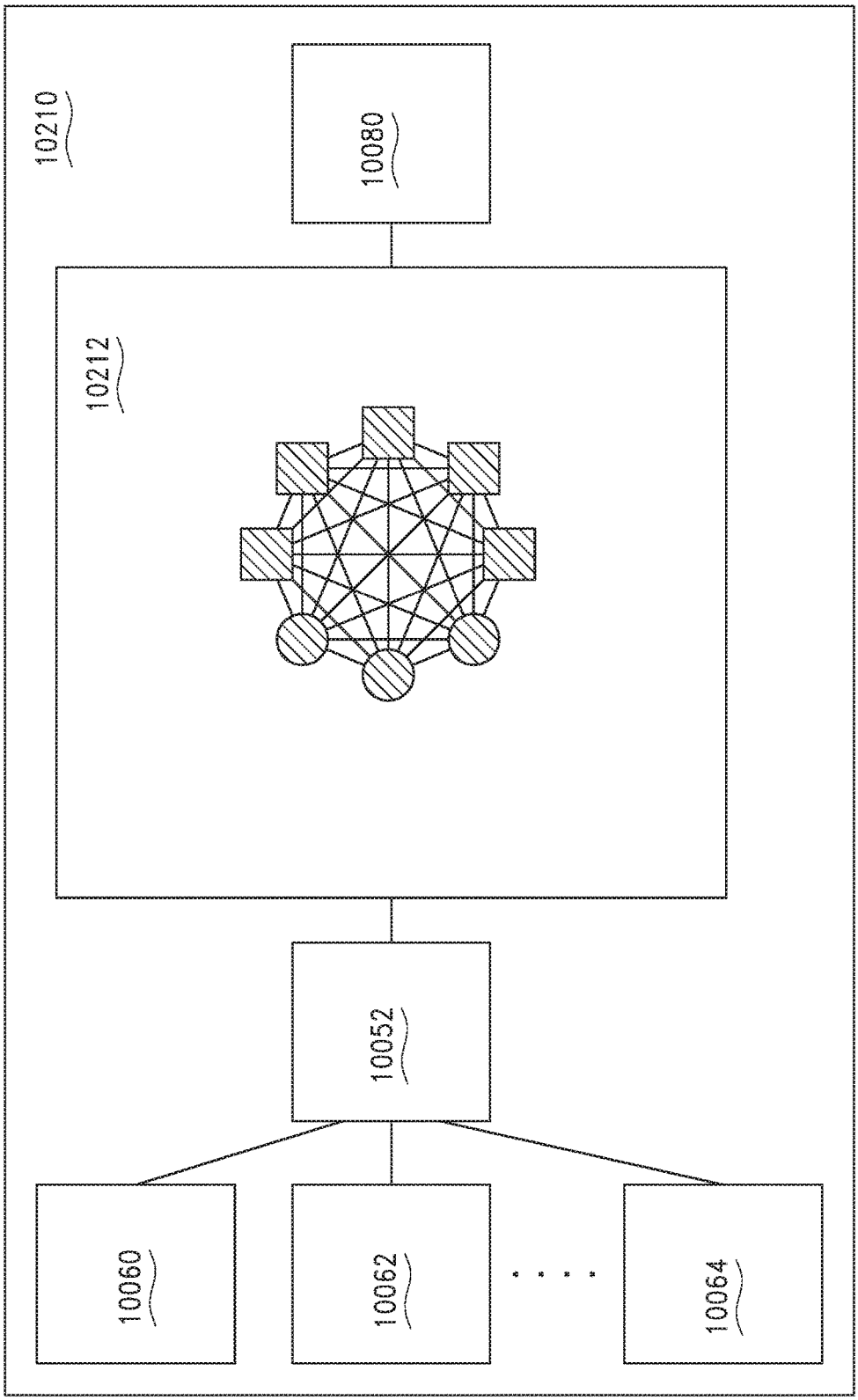


FIG. 123

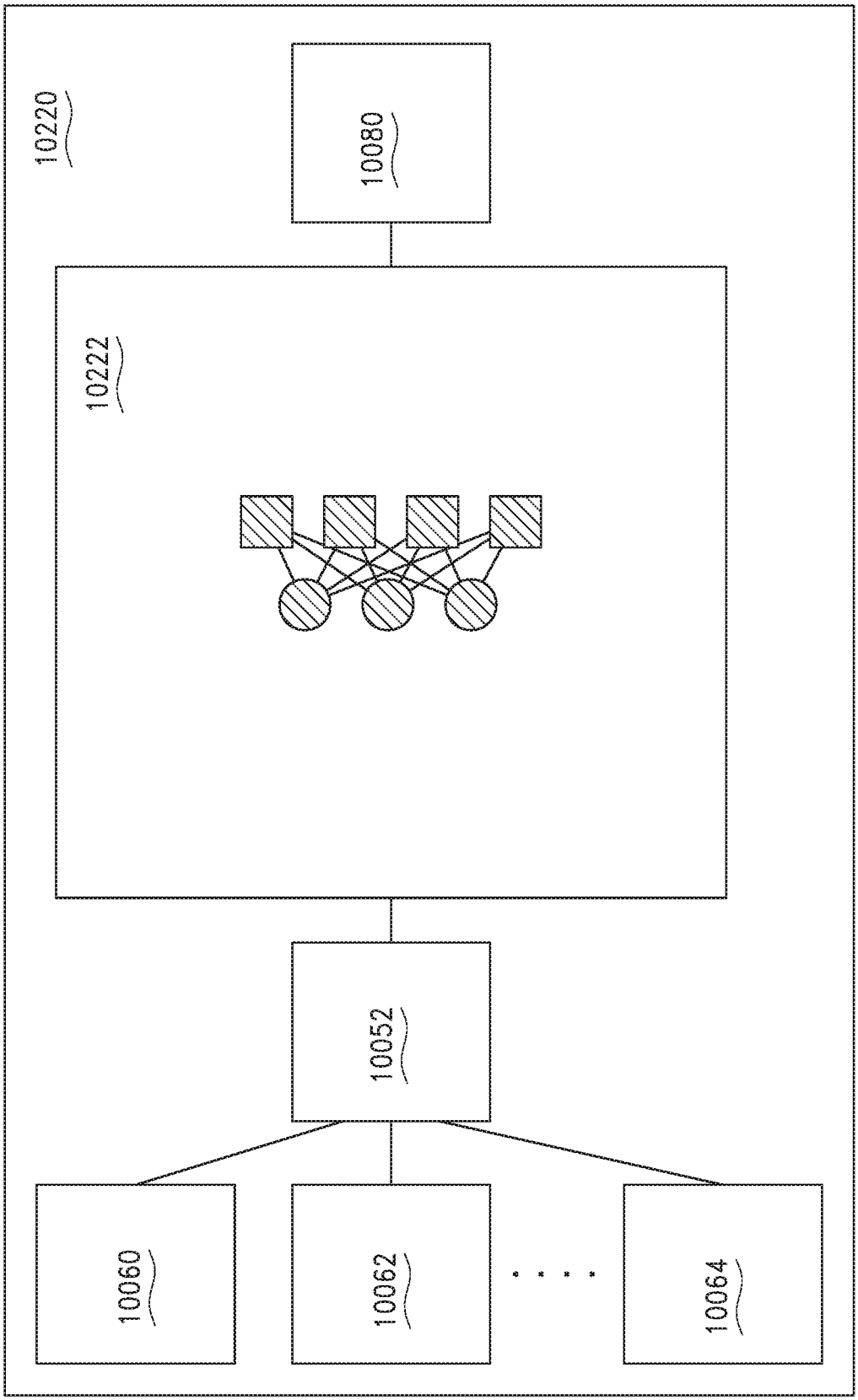


FIG. 124

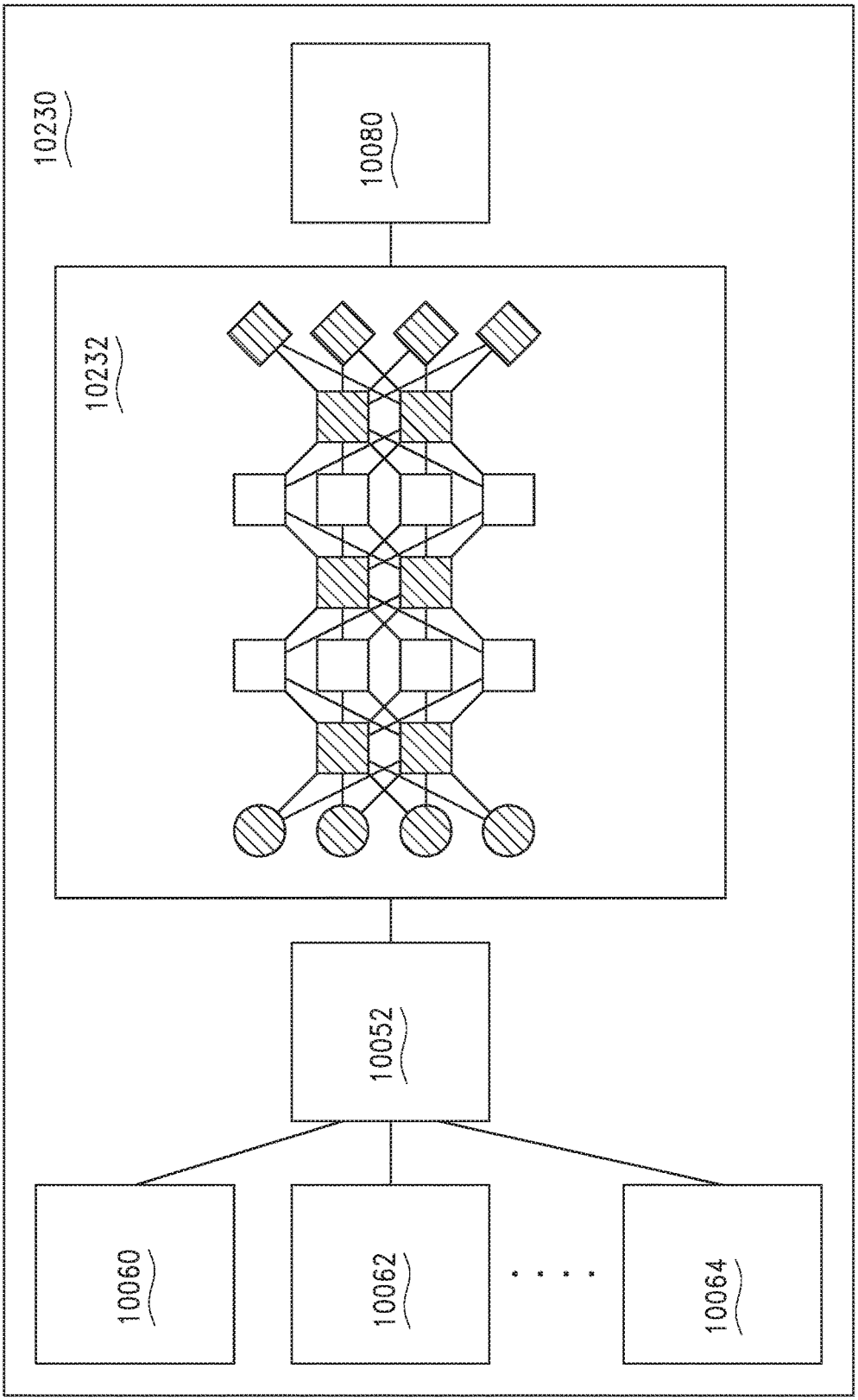


FIG. 125

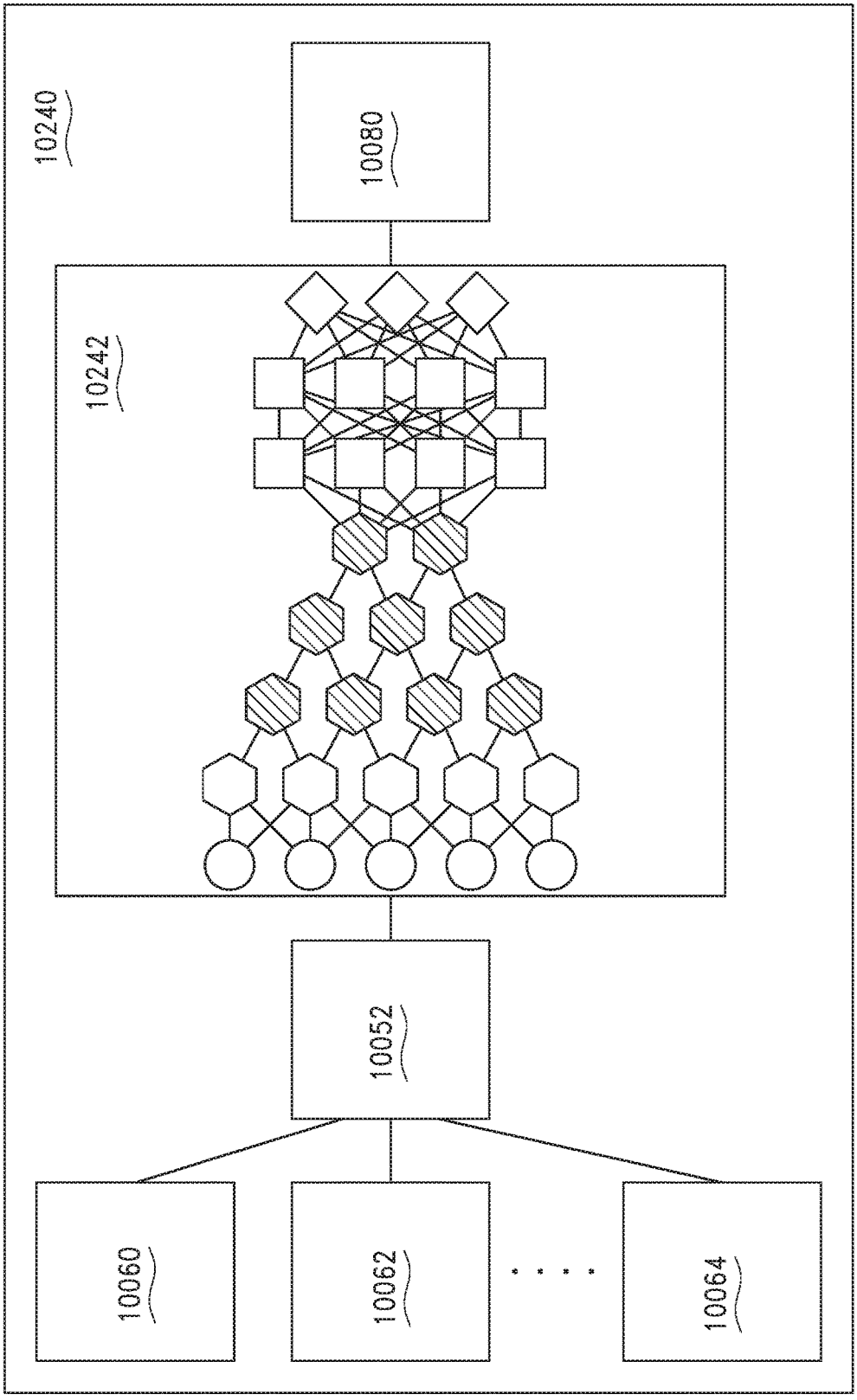


FIG. 126

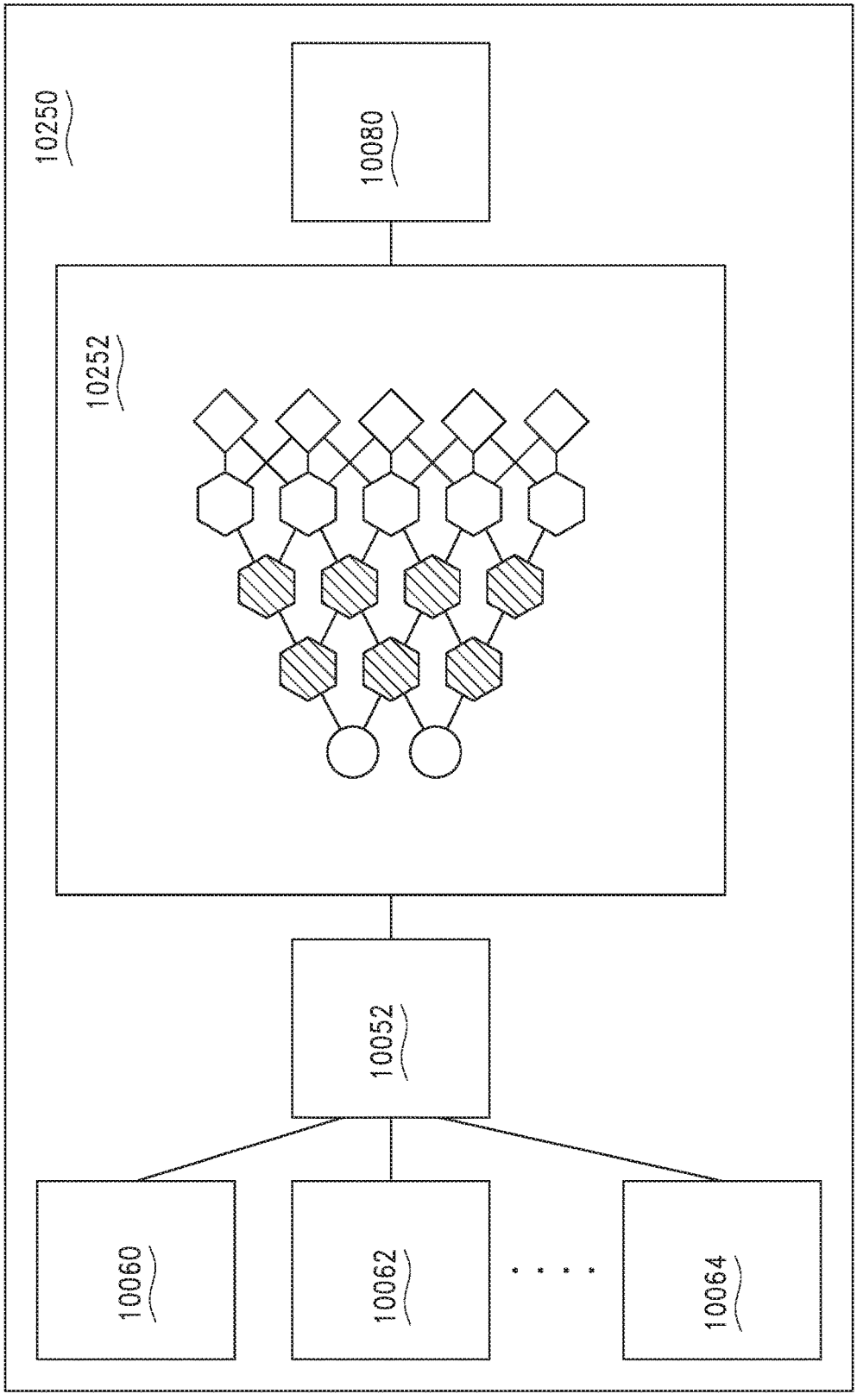


FIG. 127

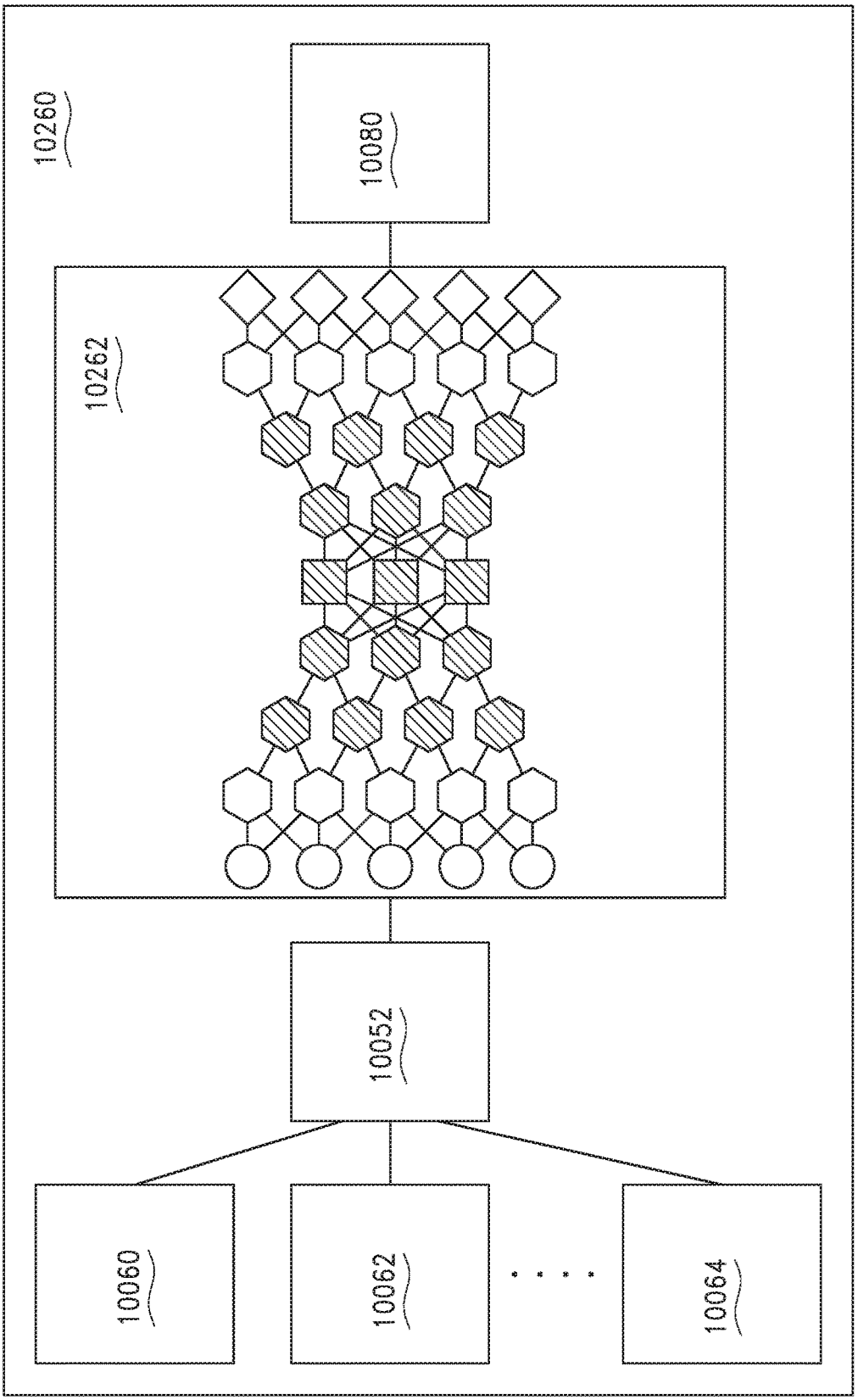


FIG. 128

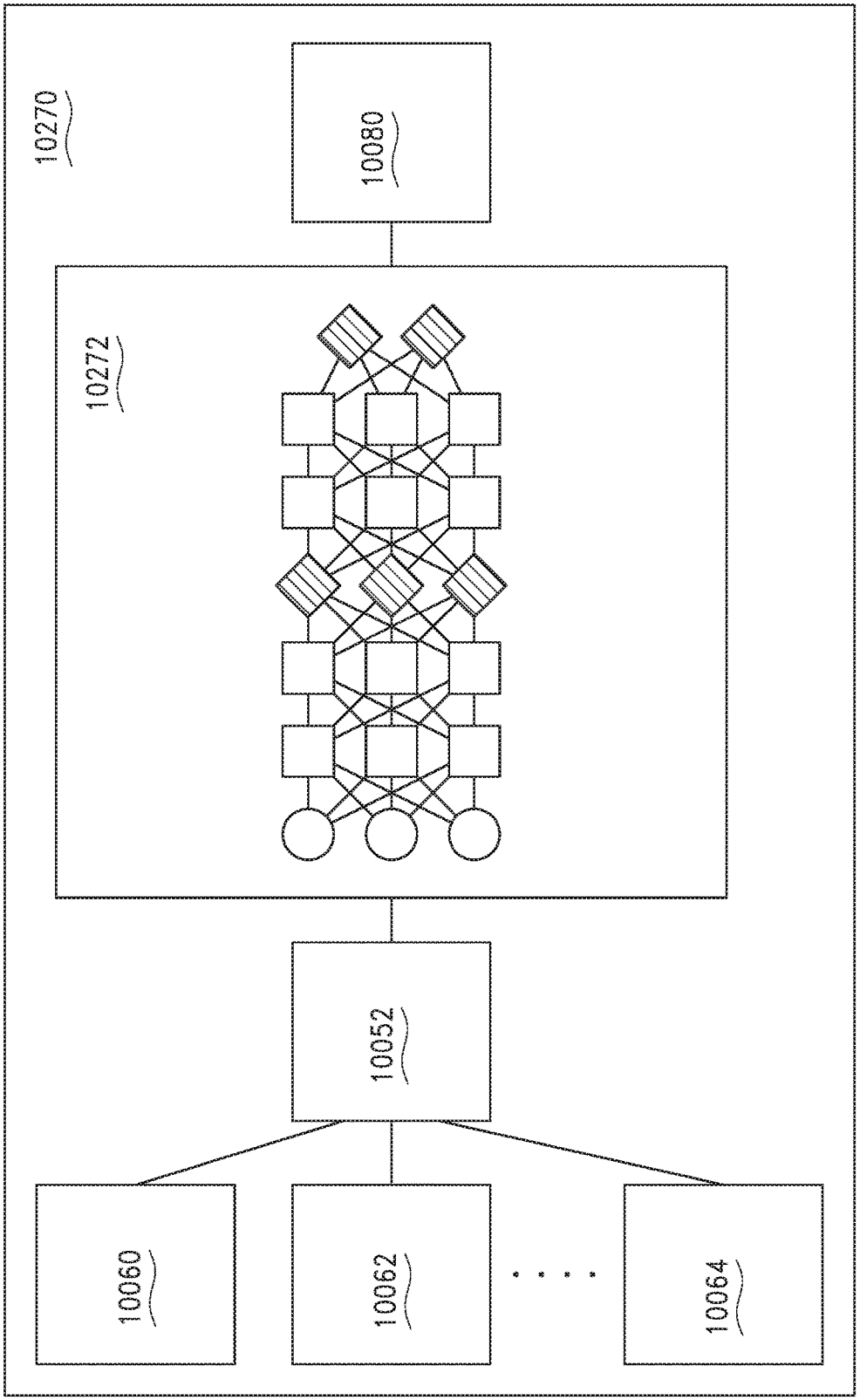


FIG. 129

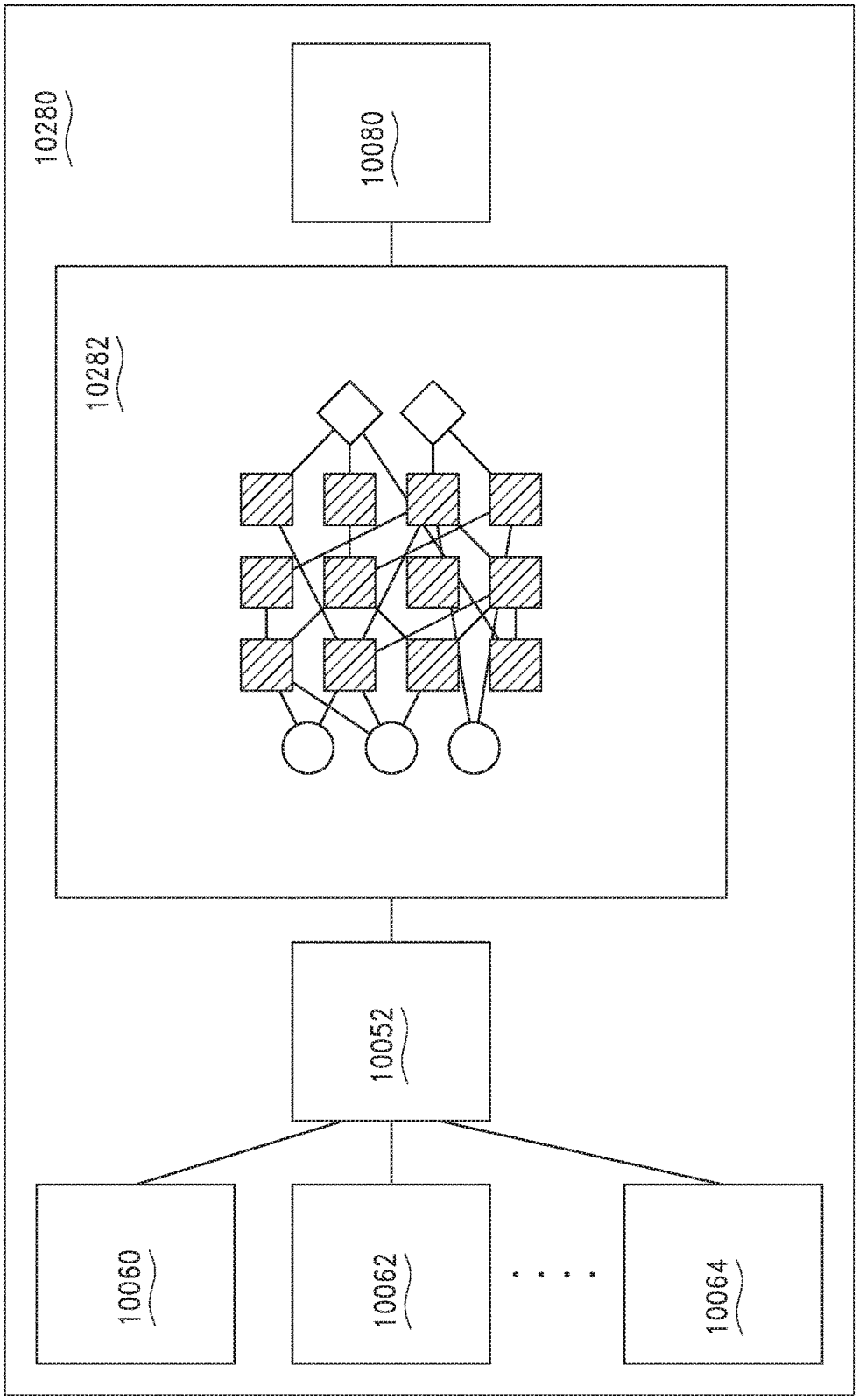


FIG. 130

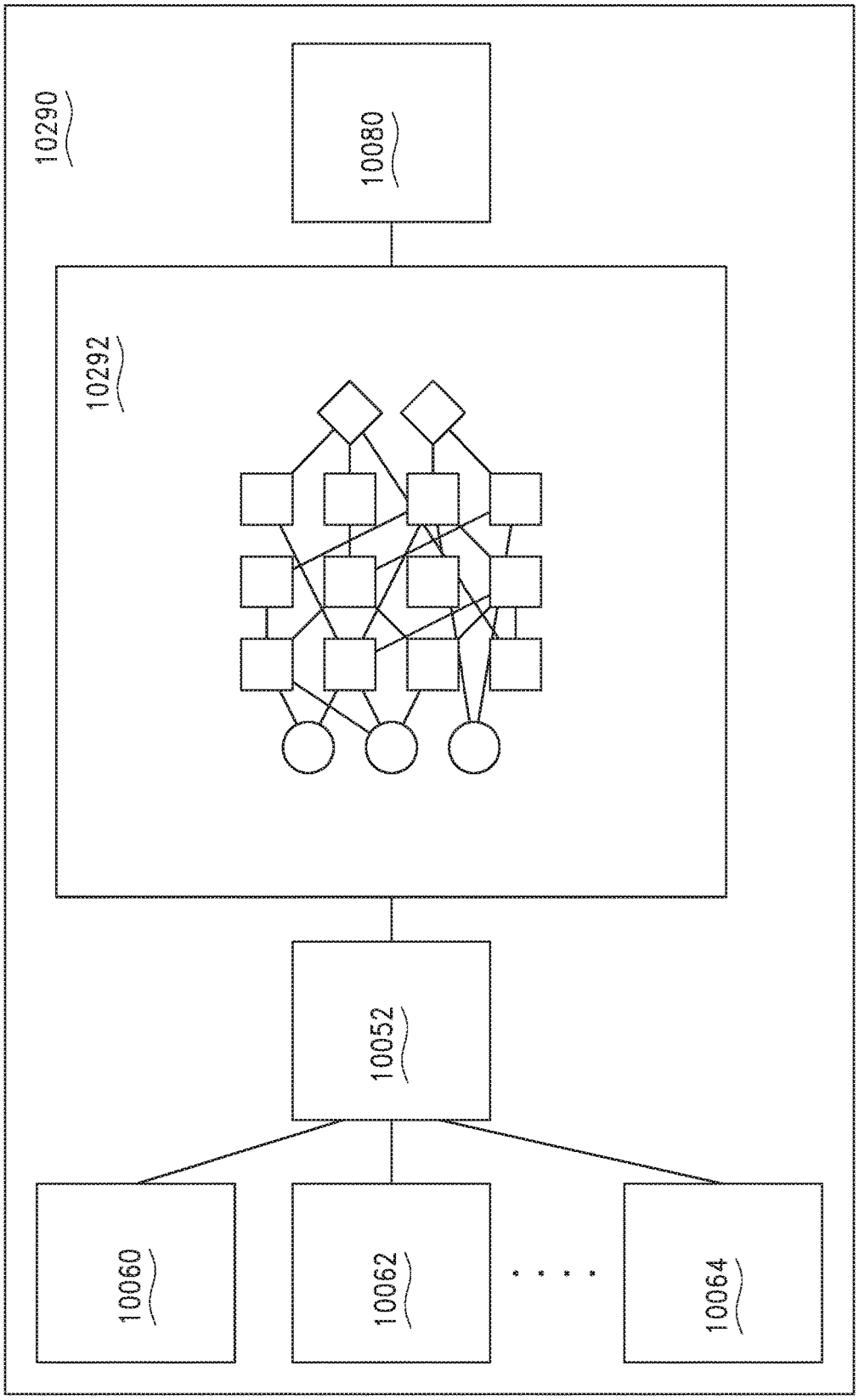


FIG. 131

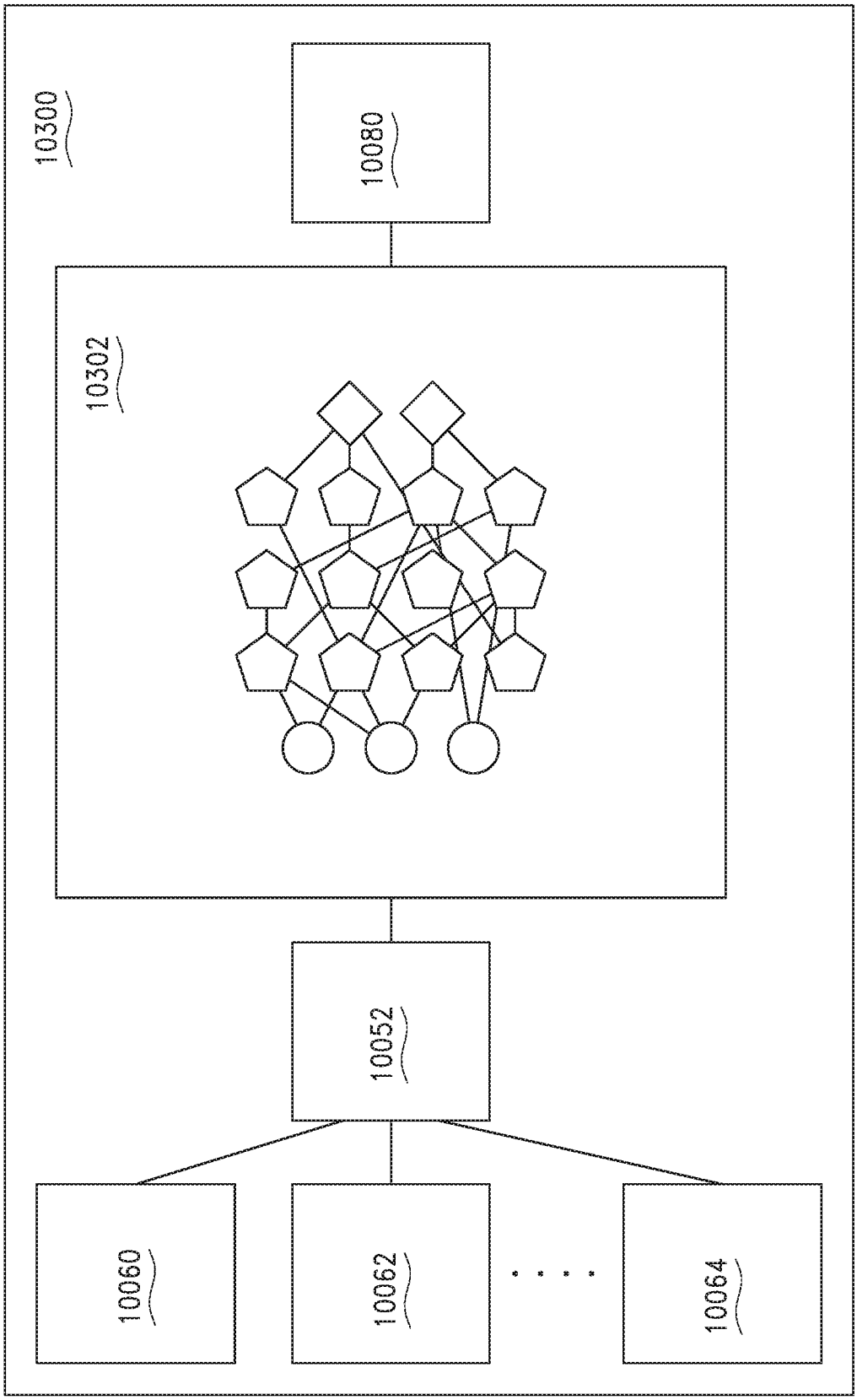


FIG. 132

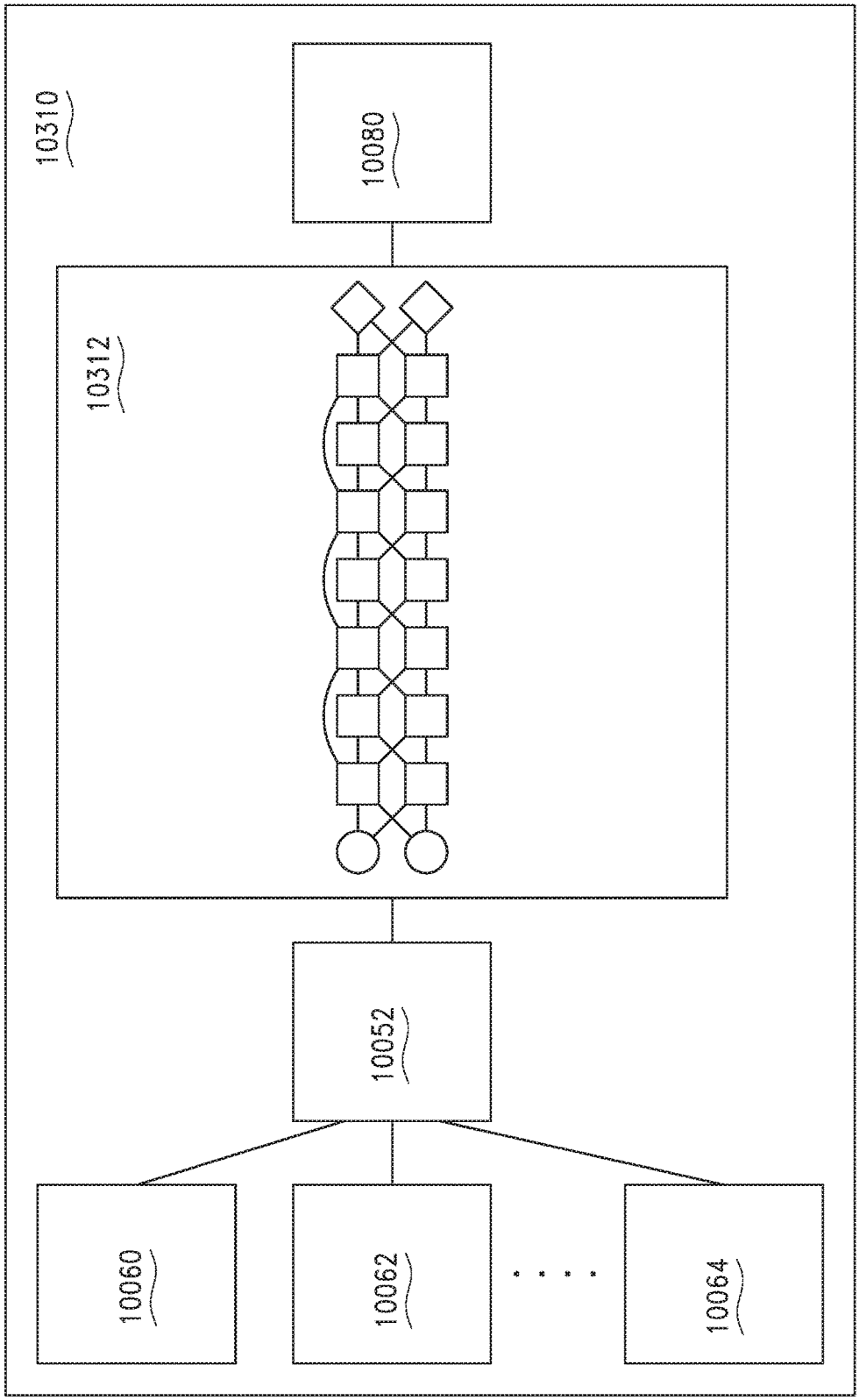


FIG. 133

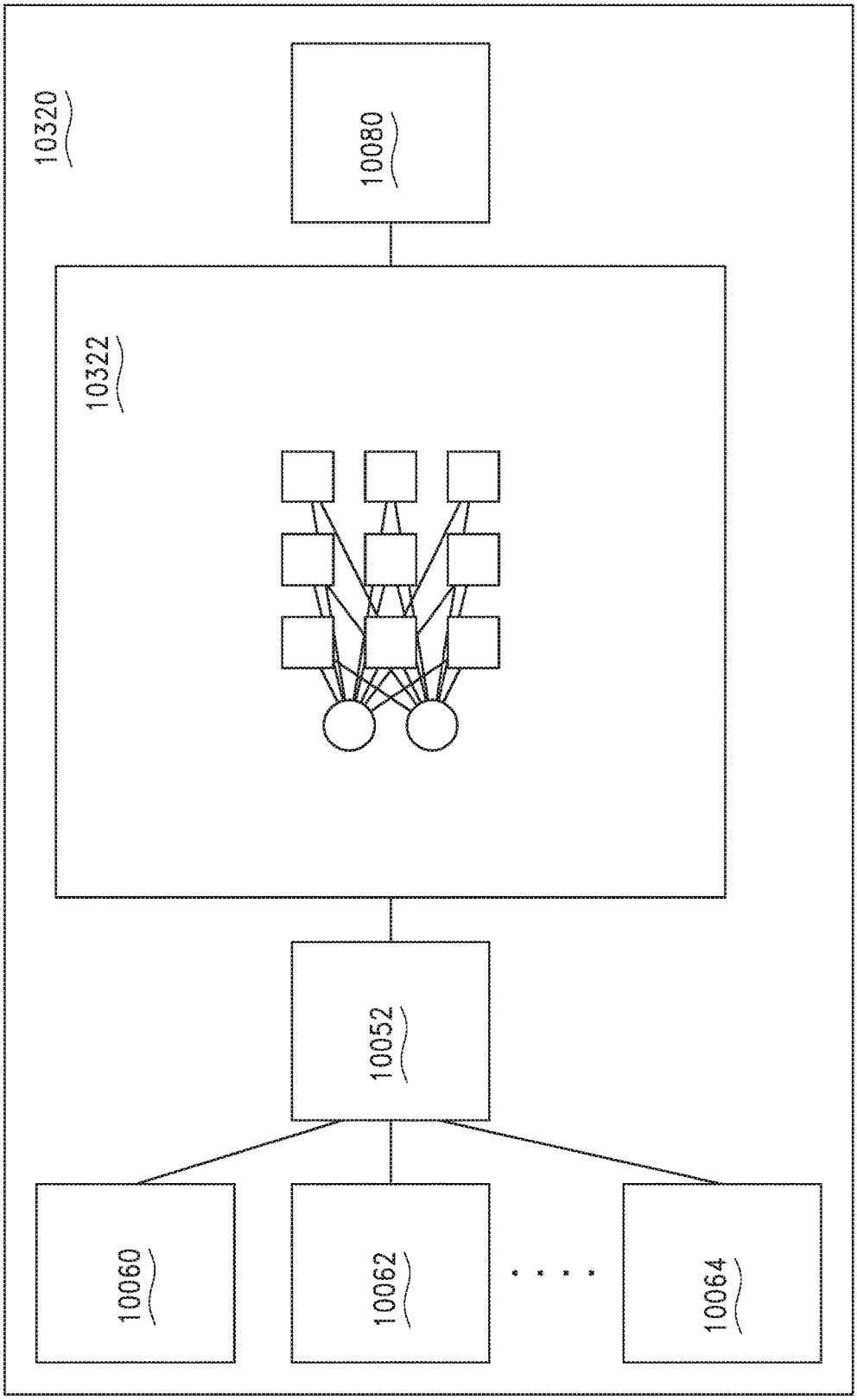


FIG. 134

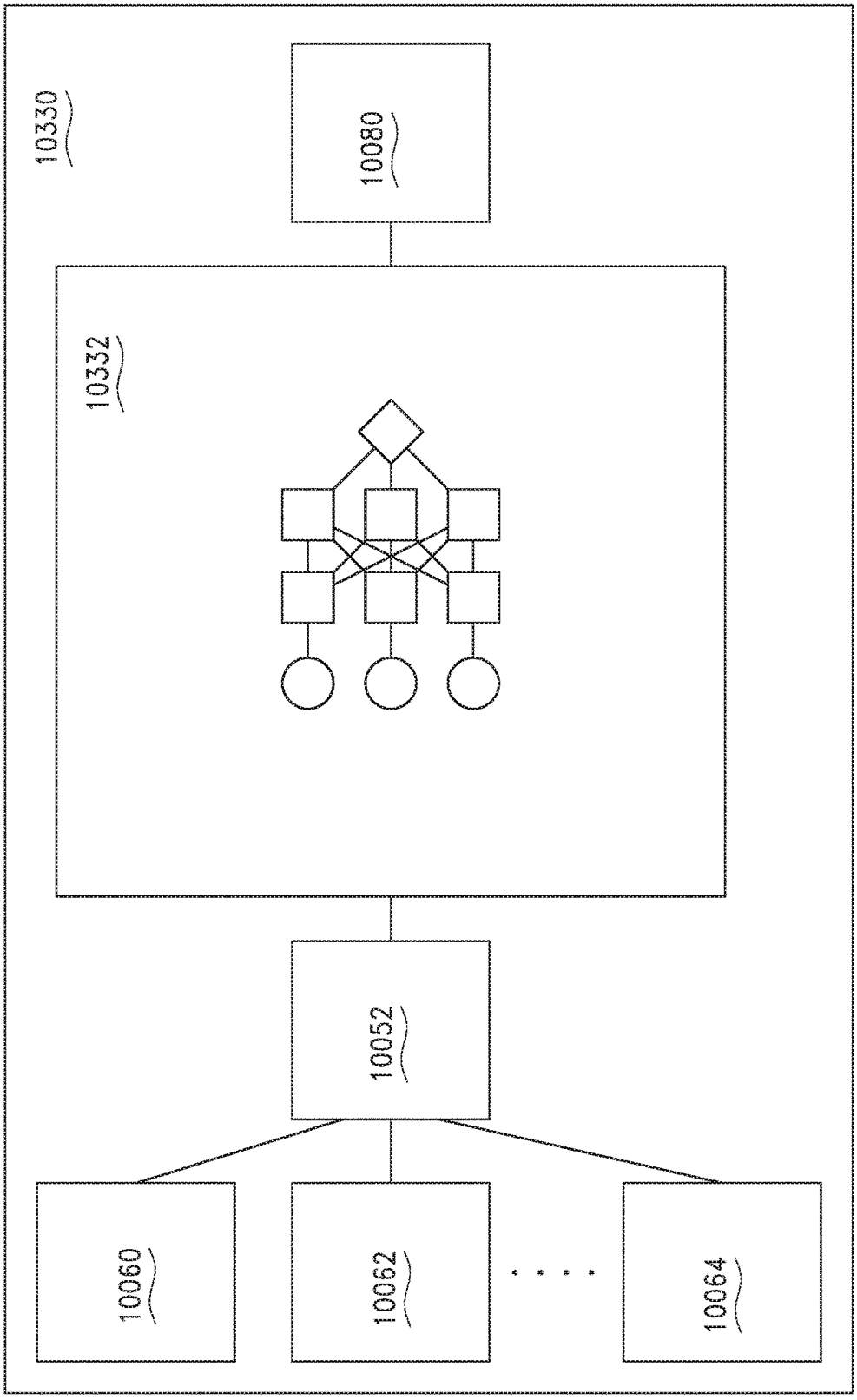


FIG. 135

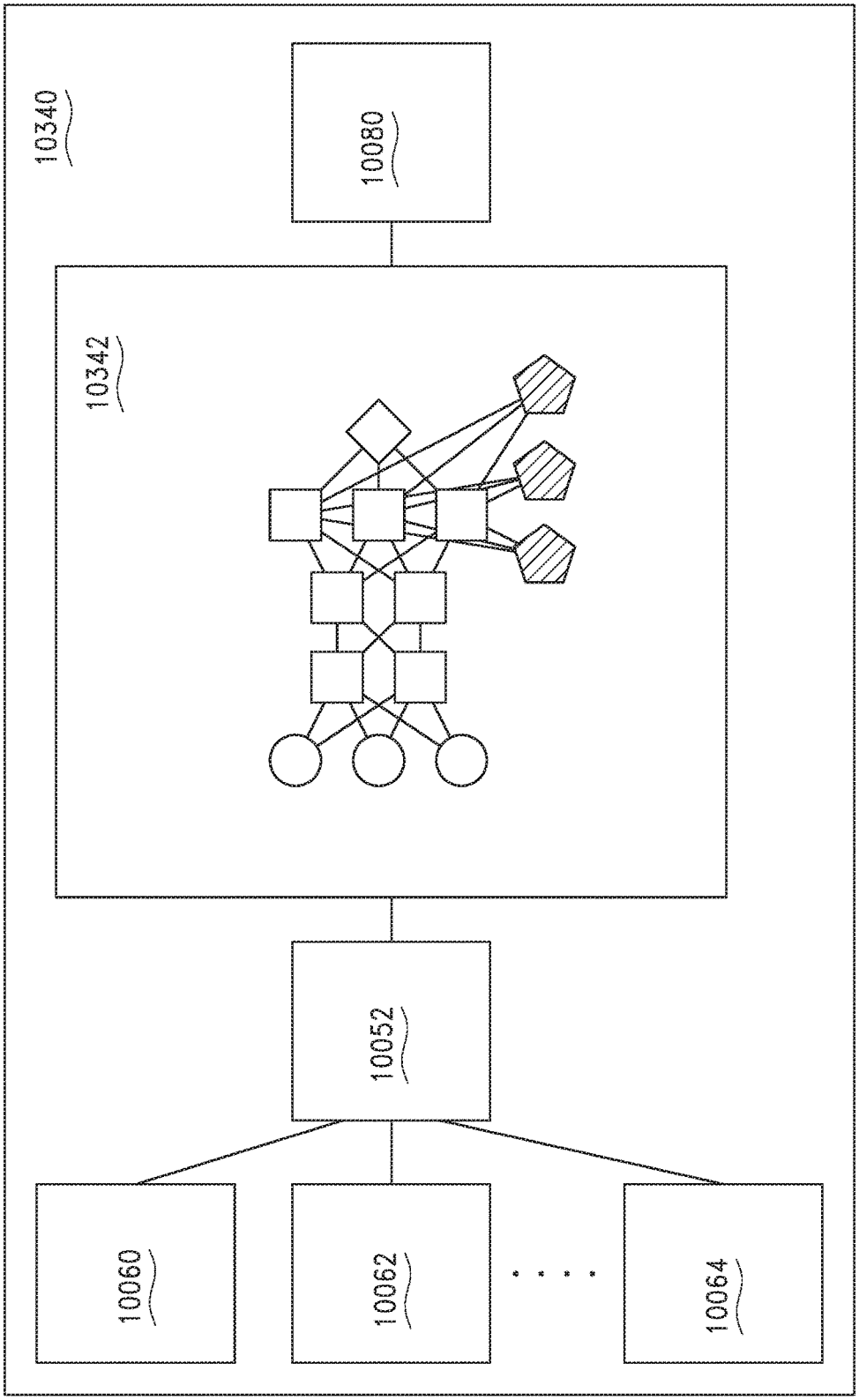


FIG. 136

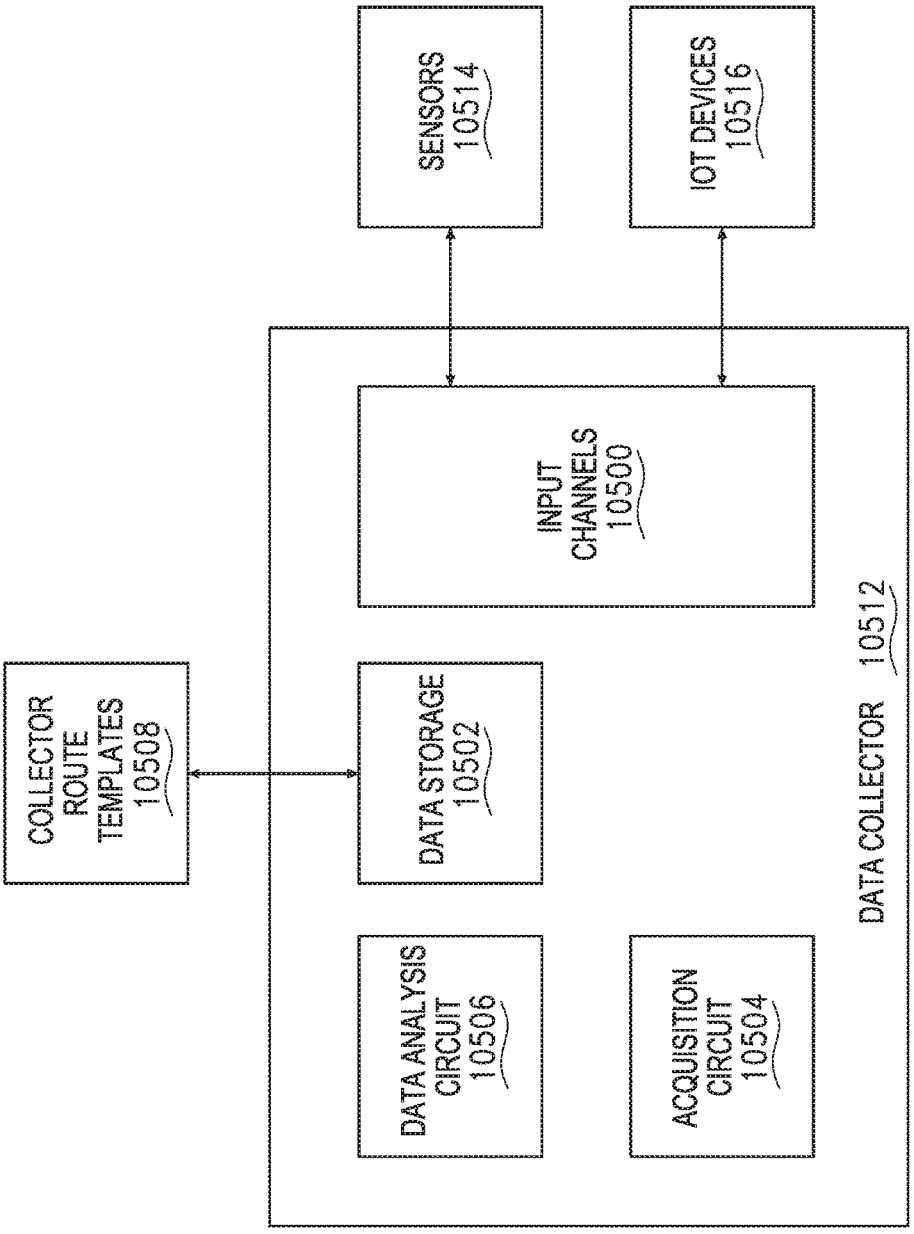
SENSORS
10514
IOT DEVICES
10516
INPUT
CHANNELS
10500
COLLECTOR
ROUTE
TEMPLATES
10508
DATA STORAGE
10502
DATA ANALYSIS
CIRCUIT
10506
ACQUISITION
CIRCUIT
10504
DATA COLLECTOR 10512

FIG. 137

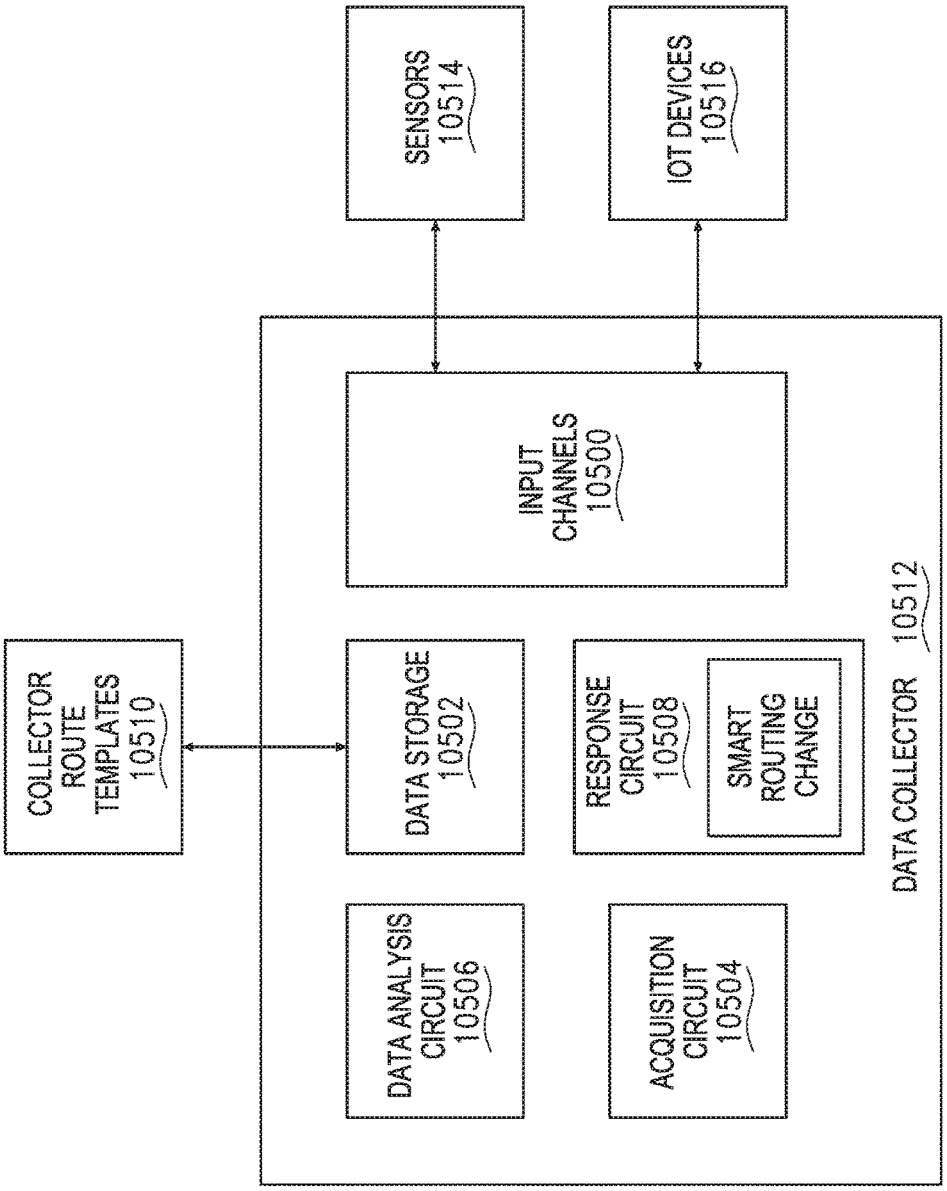
SENSORS
10514
IOT DEVICES
10516
INPUT
CHANNELS
10500
COLLECTOR
ROUTE
TEMPLATES
10510
DATA STORAGE
10502
RESPONSE
CIRCUIT
10508
SMART
ROUTING
CHANGE
DATA COLLECTOR 10512
DATA ANALYSIS
CIRCUIT
10506
ACQUISITION
CIRCUIT
10504

FIG. 138

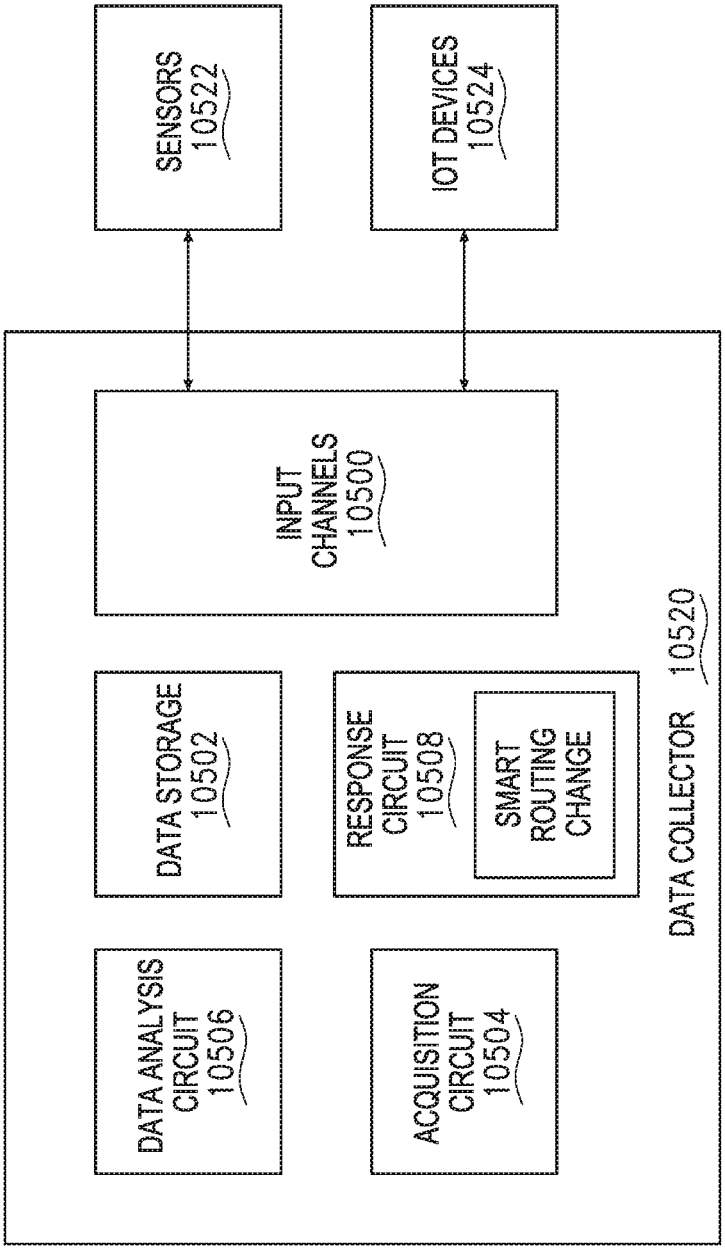
SENSORS
10522
IOT DEVICES
10524
INPUT
CHANNELS
10500
DATA STORAGE
10502
RESPONSE
CIRCUIT
10508
SMART
ROUTING
CHANGE
DATA COLLECTOR 10520
DATA ANALYSIS
CIRCUIT
10506
ACQUISITION
CIRCUIT
10504

FIG. 139

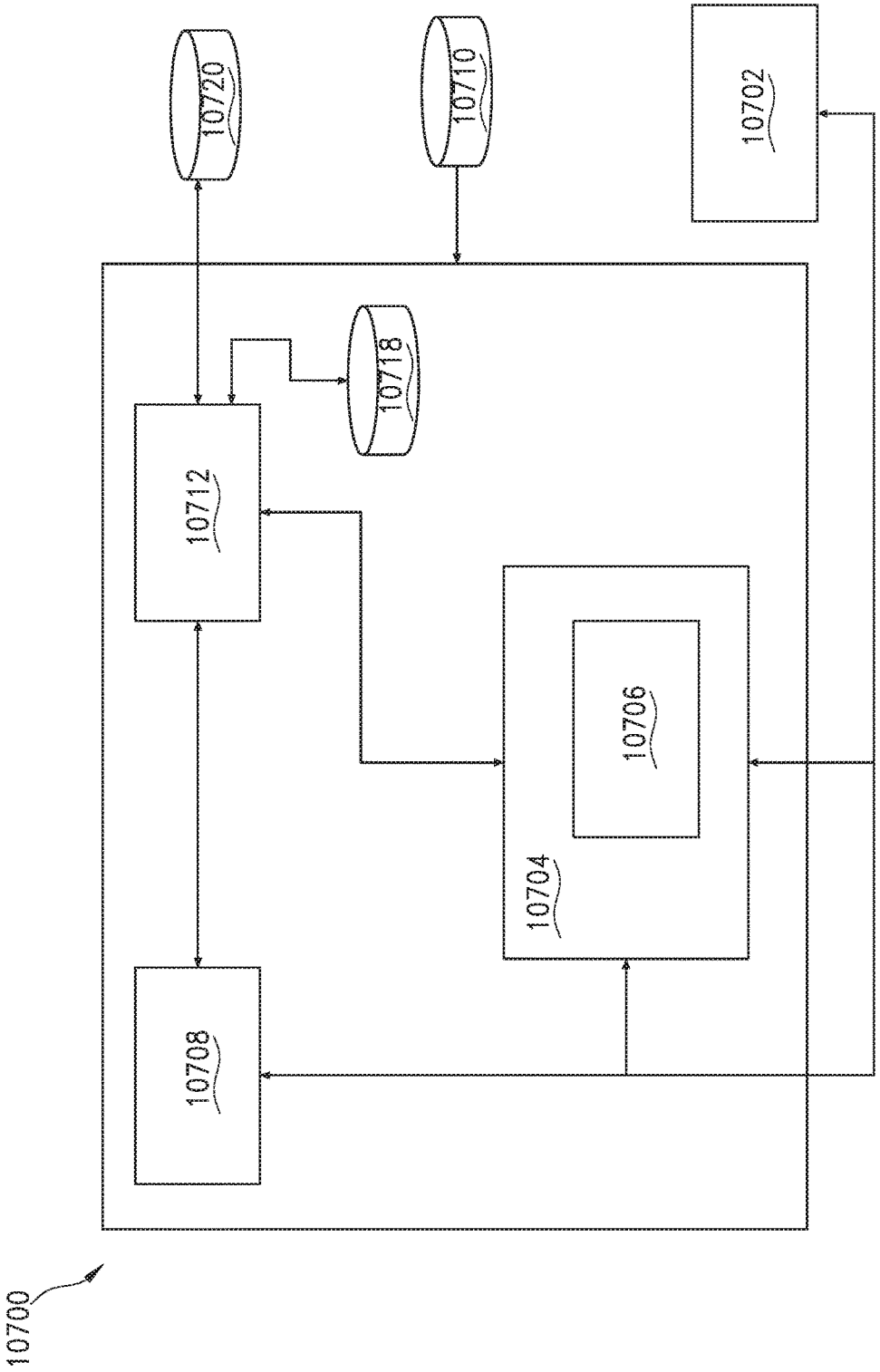


FIG. 140

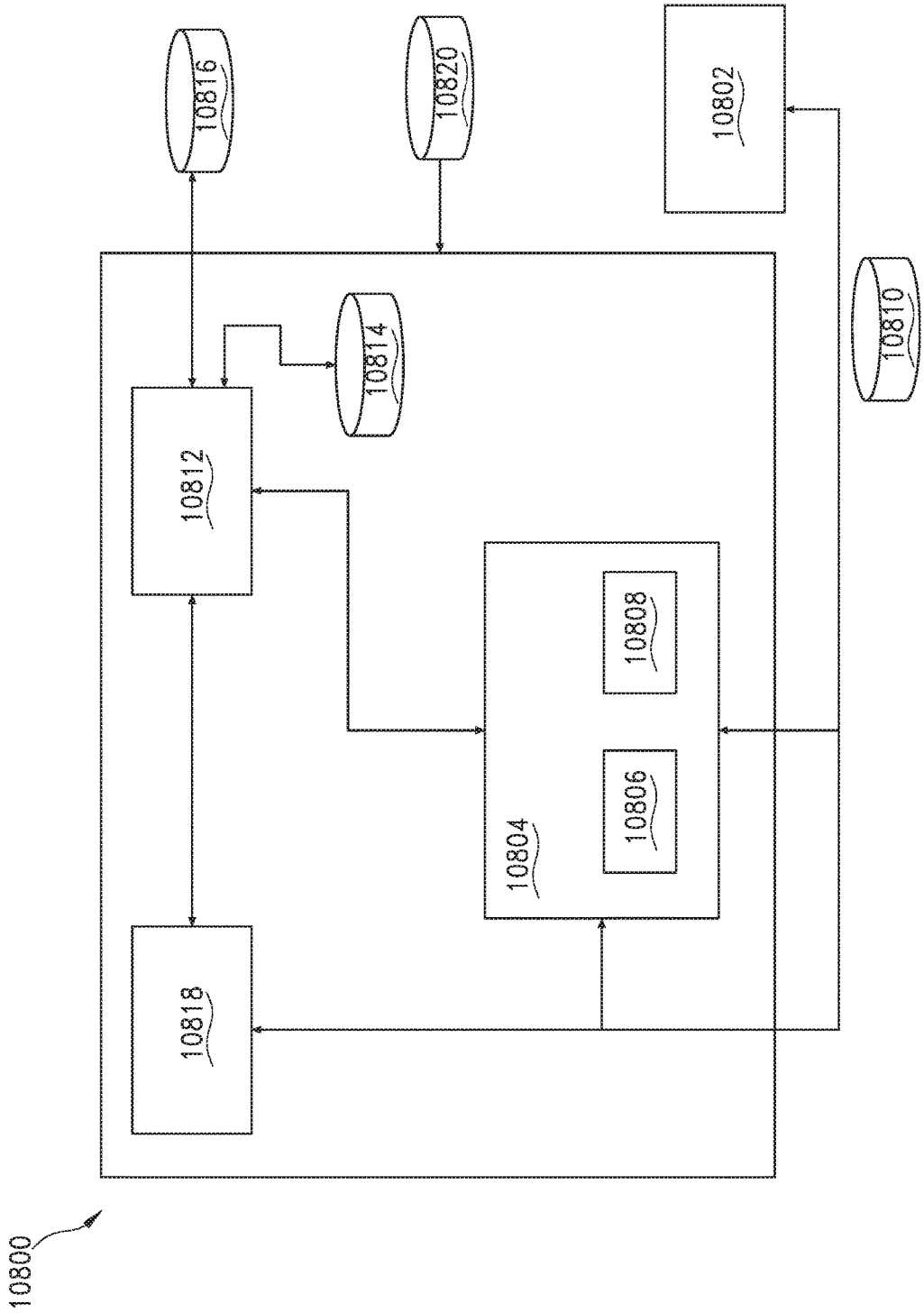
10800
10816
10820
10802
10810
10814
10812
10808
10806
10804
10818

FIG. 141

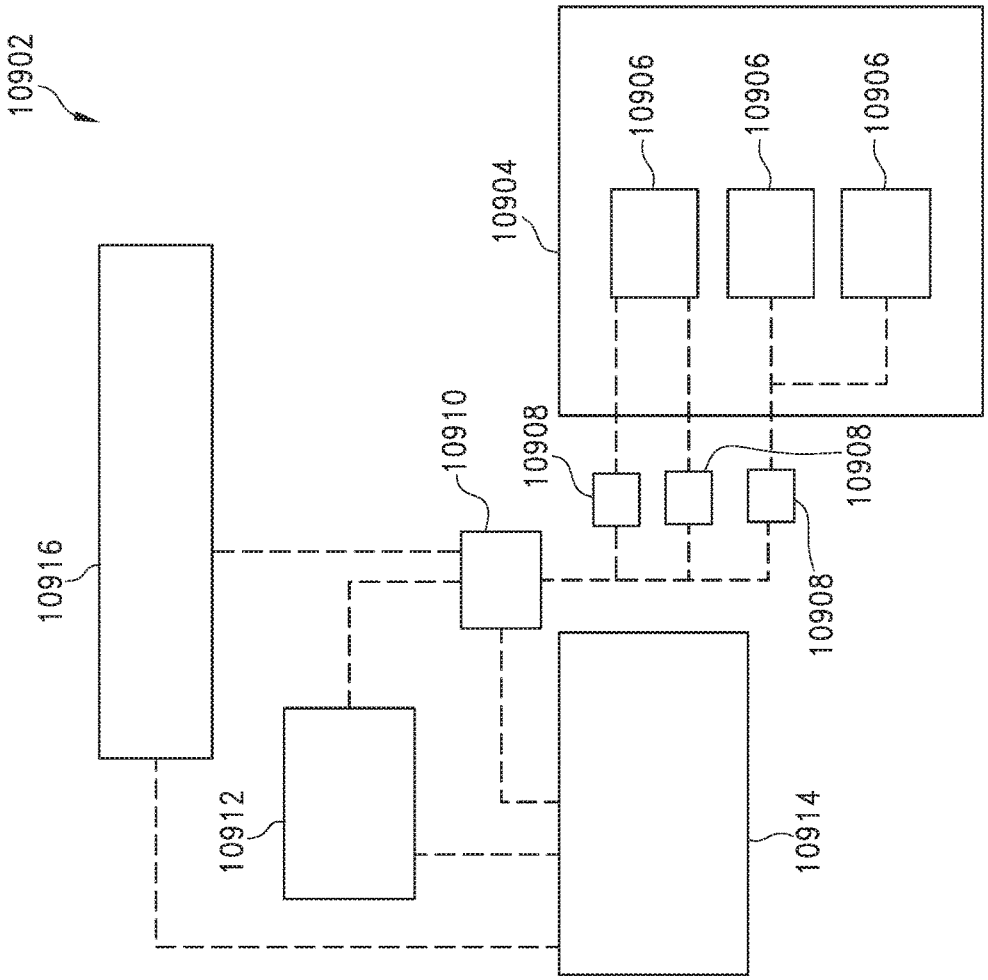
10902
10904
10906
10906
10906
10908
10908
10908
10910
10912
10914
10916

FIG. 142

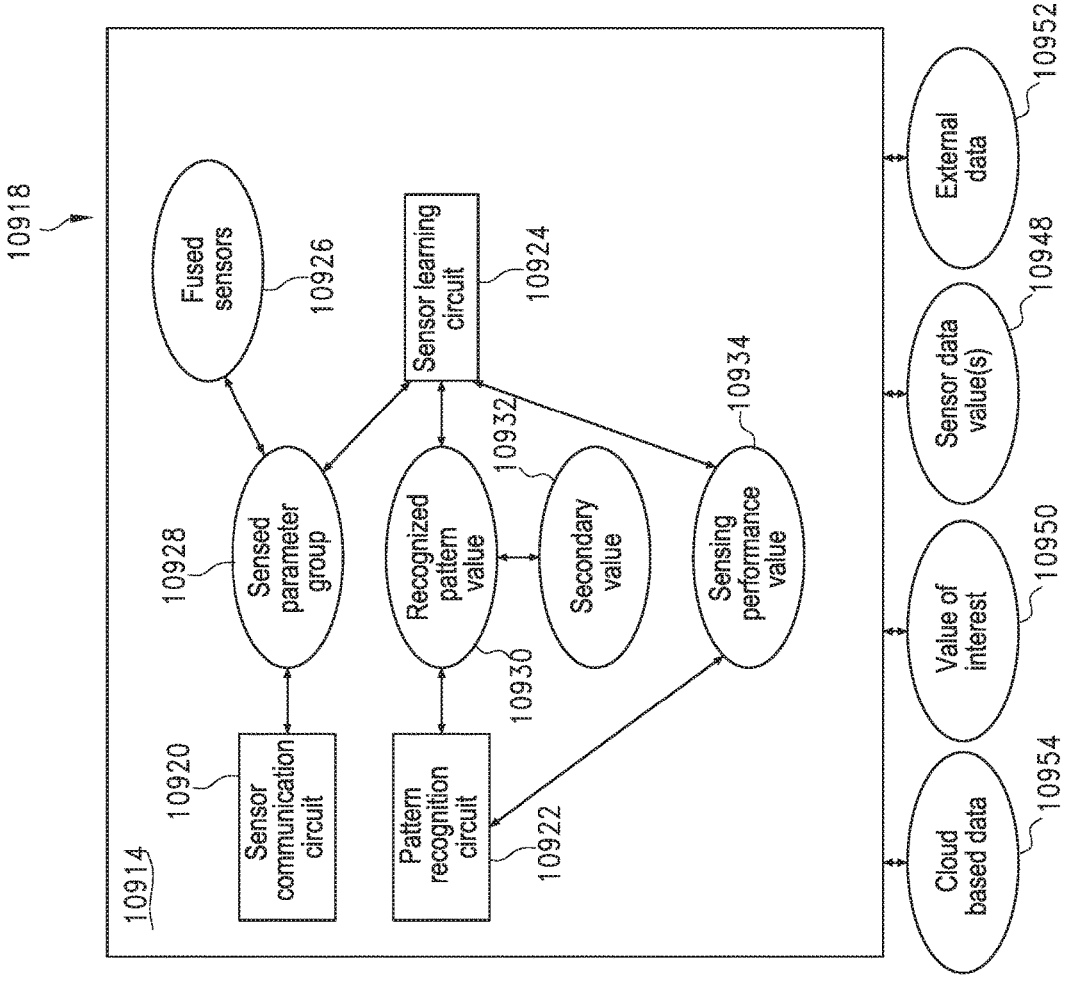
10918
10914
Sensor communication circuit
10920
Pattern recognition circuit
10922
Sensed parameter group
10928
Recognized pattern value
10930
Secondary value
10932
Sensing performance value
10934
Fused sensors
10926
Sensor learning circuit
10924
Cloud based data
10954
Value of interest
10950
Sensor data value(s)
10948
External data
10952

FIG. 143

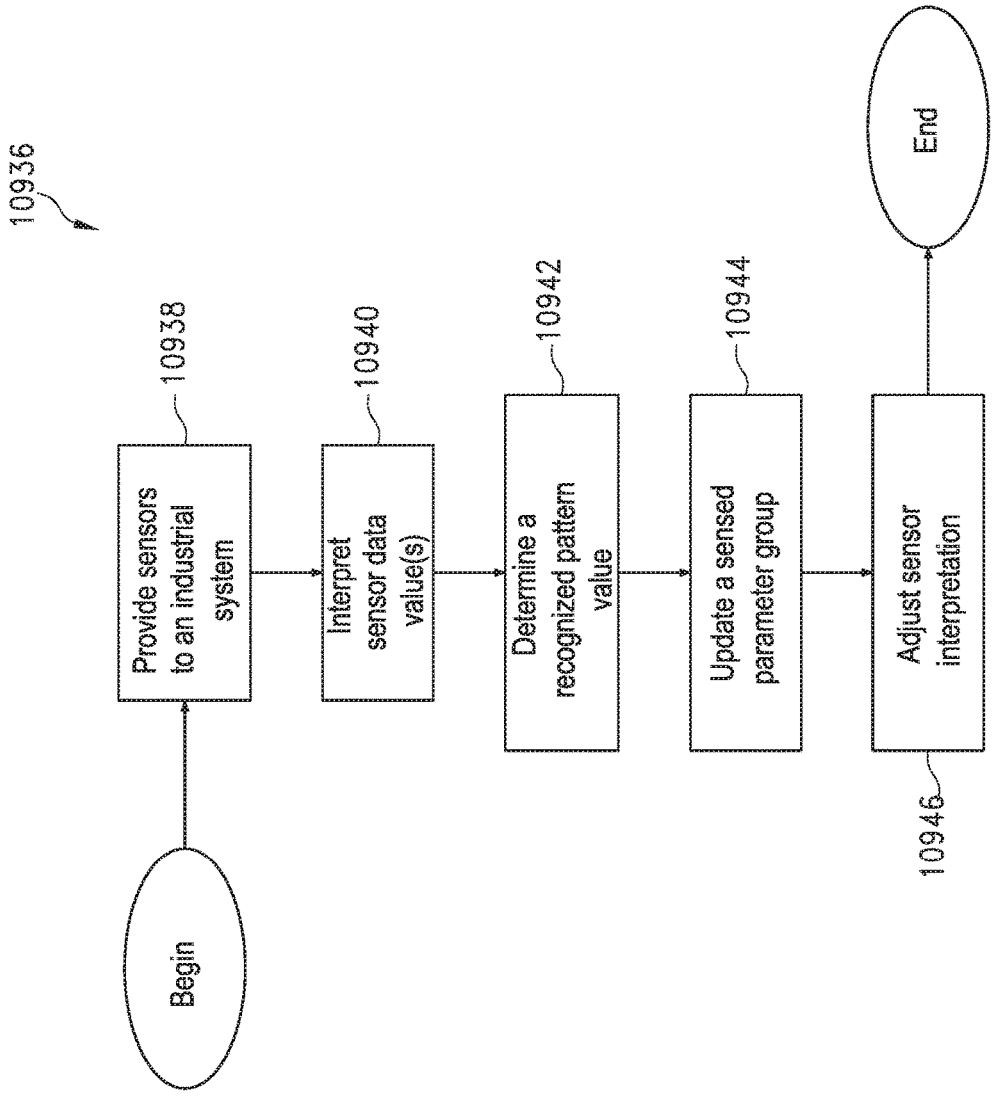
10936
Begin
Provide sensors to an industrial system
10938
Interpret sensor data value(s)
10940
Determine a recognized pattern value
10942
Update a sensed parameter group
10944
Adjust sensor interpretation
10946
End

FIG. 144

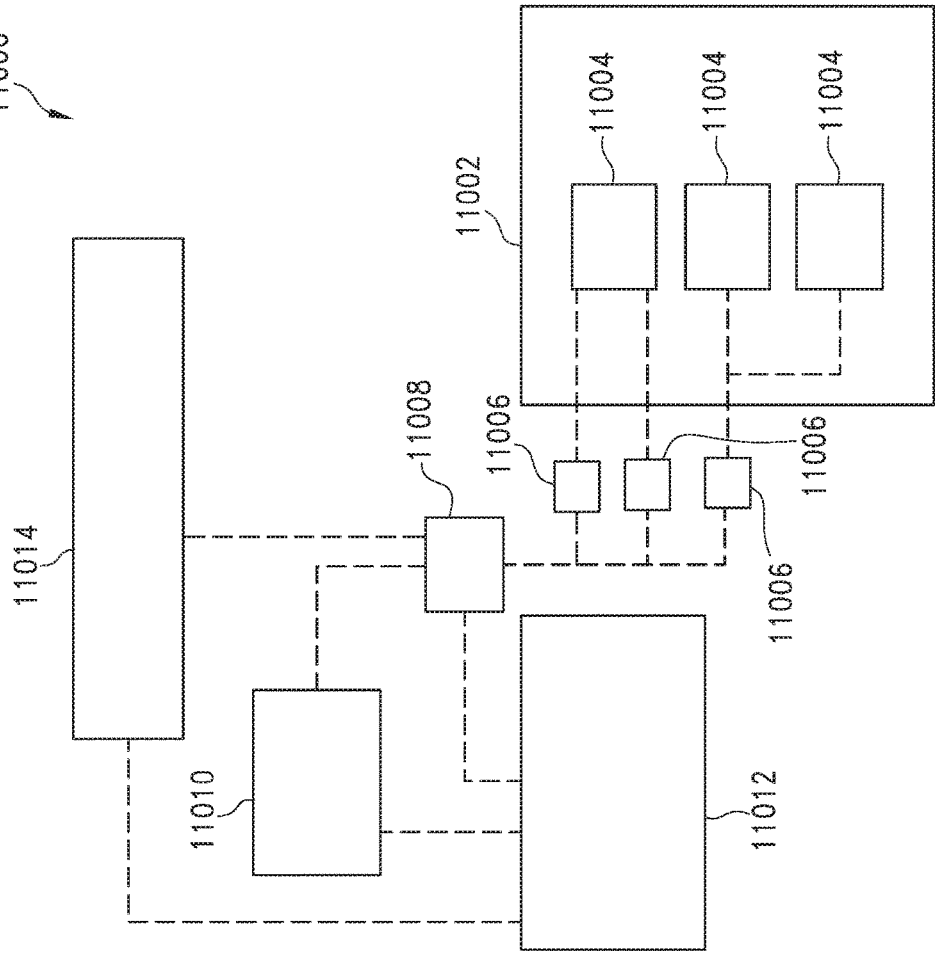
11000
11002
11004
11004
11004
11006
11006
11006
11008
11010
11012
11014

FIG. 145

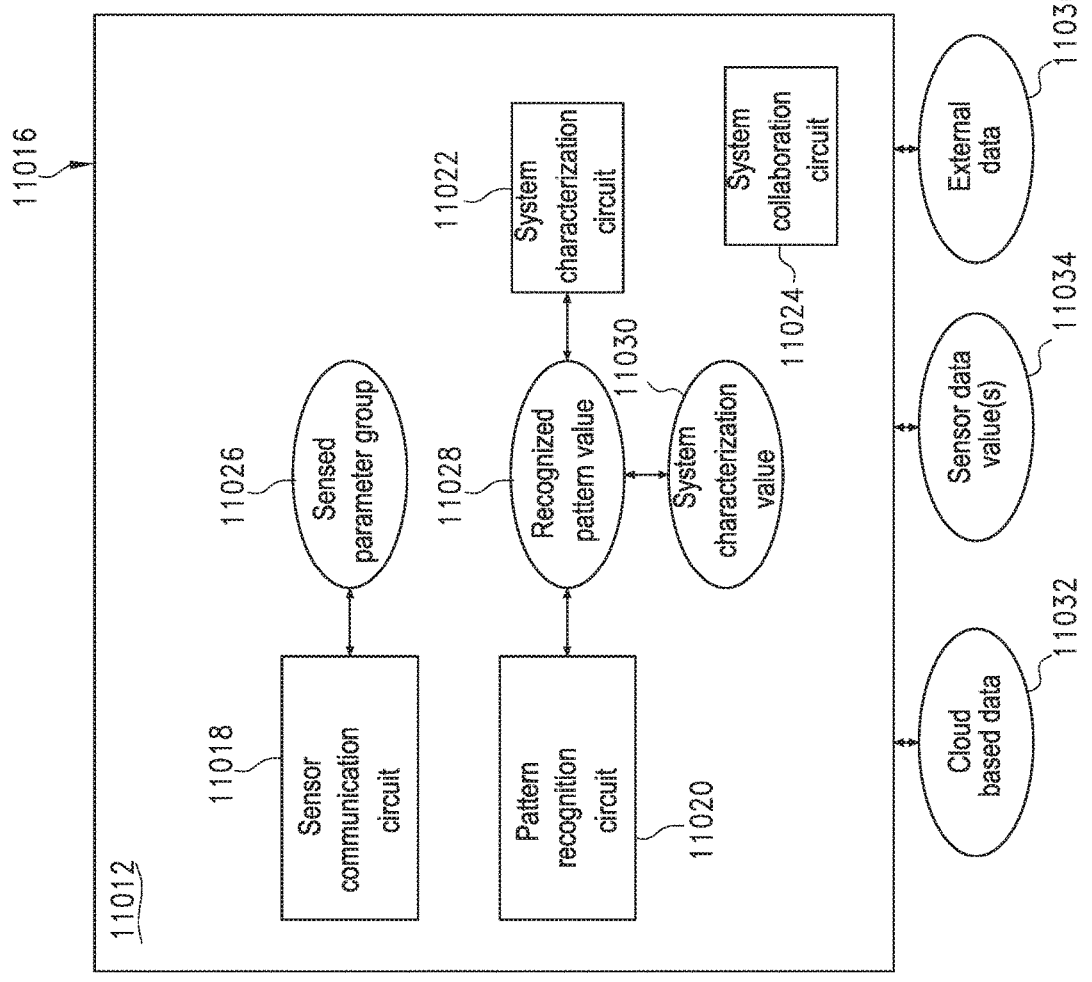
11016
11012
11018
Sensor communication circuit
11026
Sensed parameter group
11020
Pattern recognition circuit
11028
Recognized pattern value
11030
System characterization value
11022
System characterization circuit
11024
System collaboration circuit
11032
Cloud based data
11034
Sensor data value(s)
11036
External data

FIG. 146

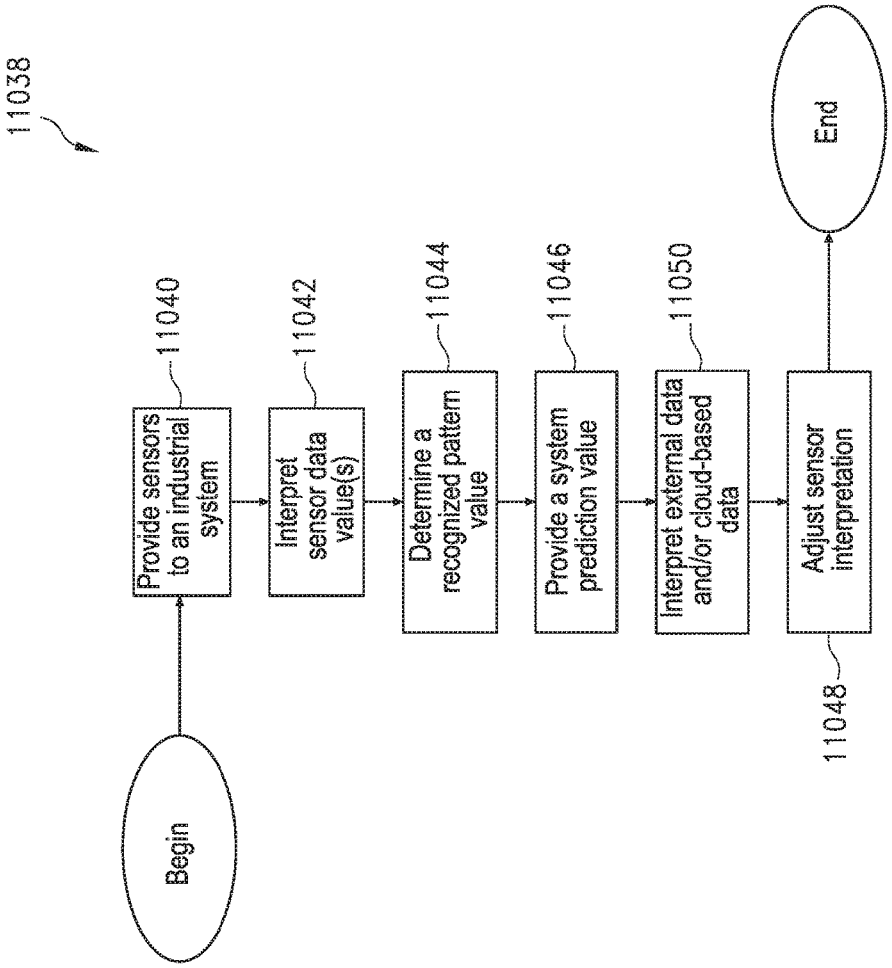
11038
Begin
Provide sensors to an industrial system
11040
Interpret sensor data value(s)
11042
Determine a recognized pattern value
11044
Provide a system prediction value
11046
Interpret external data and/or cloud-based data
11050
Adjust sensor interpretation
11048
End

FIG. 147

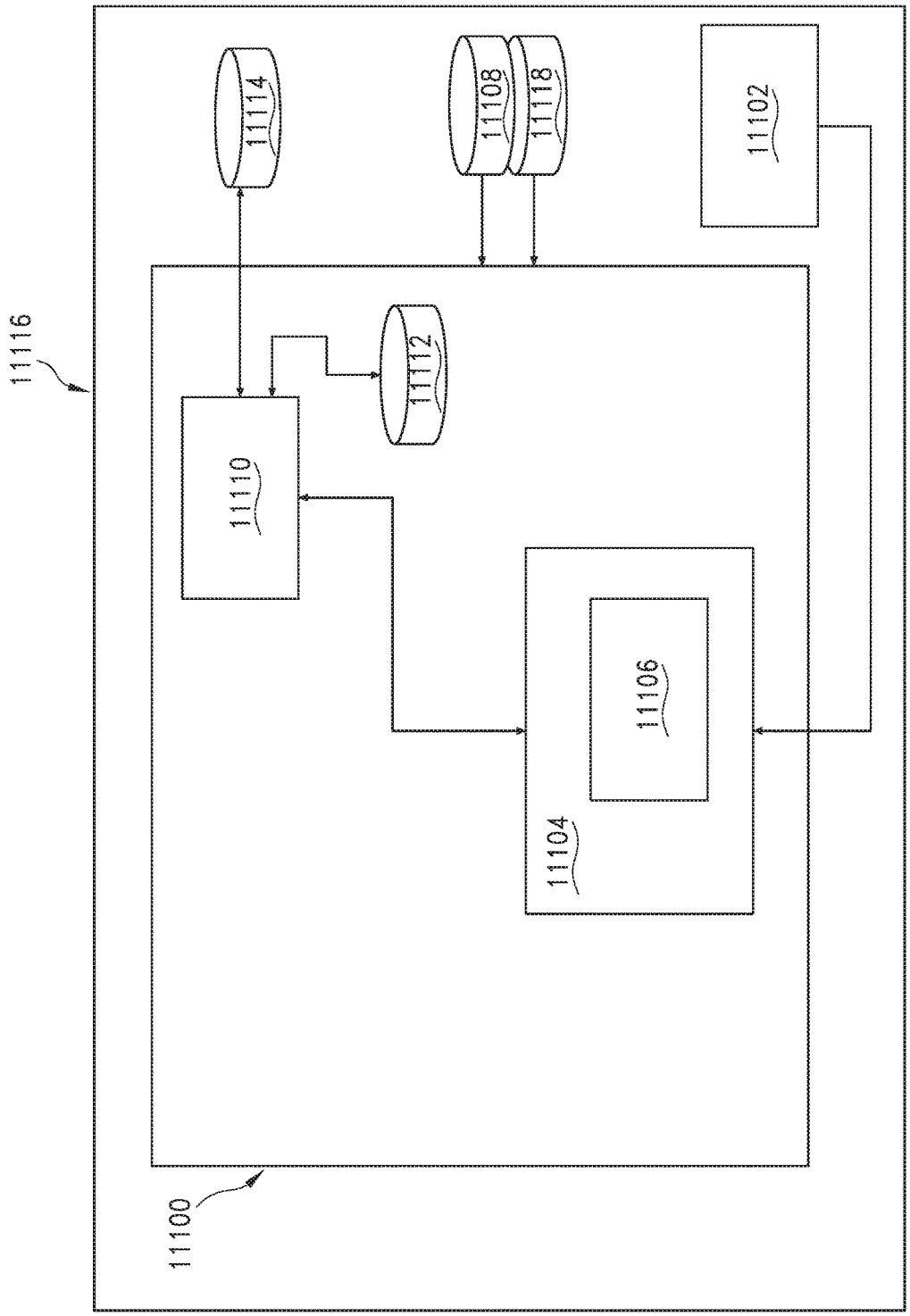
11116
11114
11108
11118
11102
11112
11110
11106
11104
11100

FIG. 148

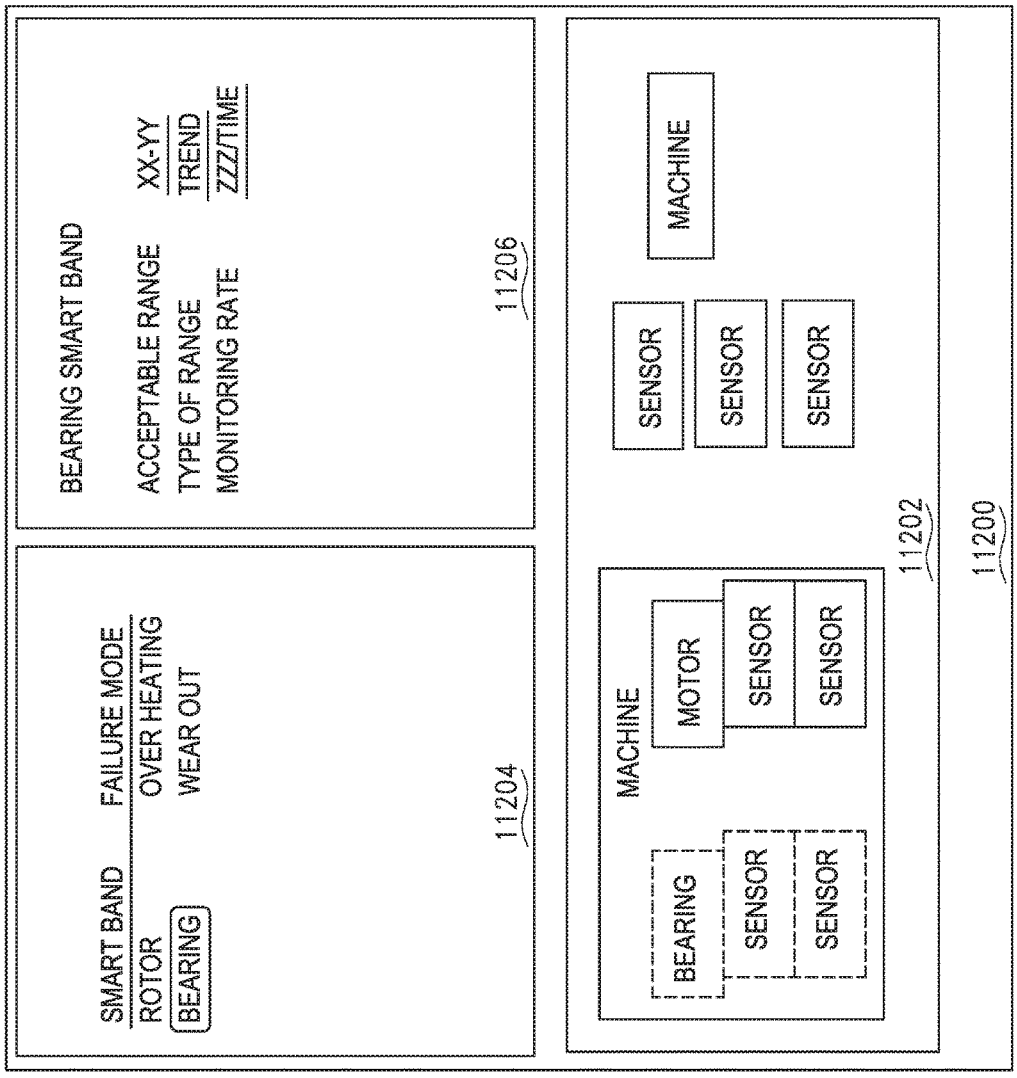
SMART BAND
FAILURE MODE
ROTOR
OVER HEATING
BEARING
WEAR OUT
11204
BEARING SMART BAND
ACCEPTABLE RANGE
XX-YY
TYPE OF RANGE
TREND
MONITORING RATE
ZZZ/TIME
11206
MACHINE
BEARING
SENSOR
SENSOR
MOTOR
SENSOR
SENSOR
11202
SENSOR
SENSOR
SENSOR
MACHINE
11200

FIG. 149

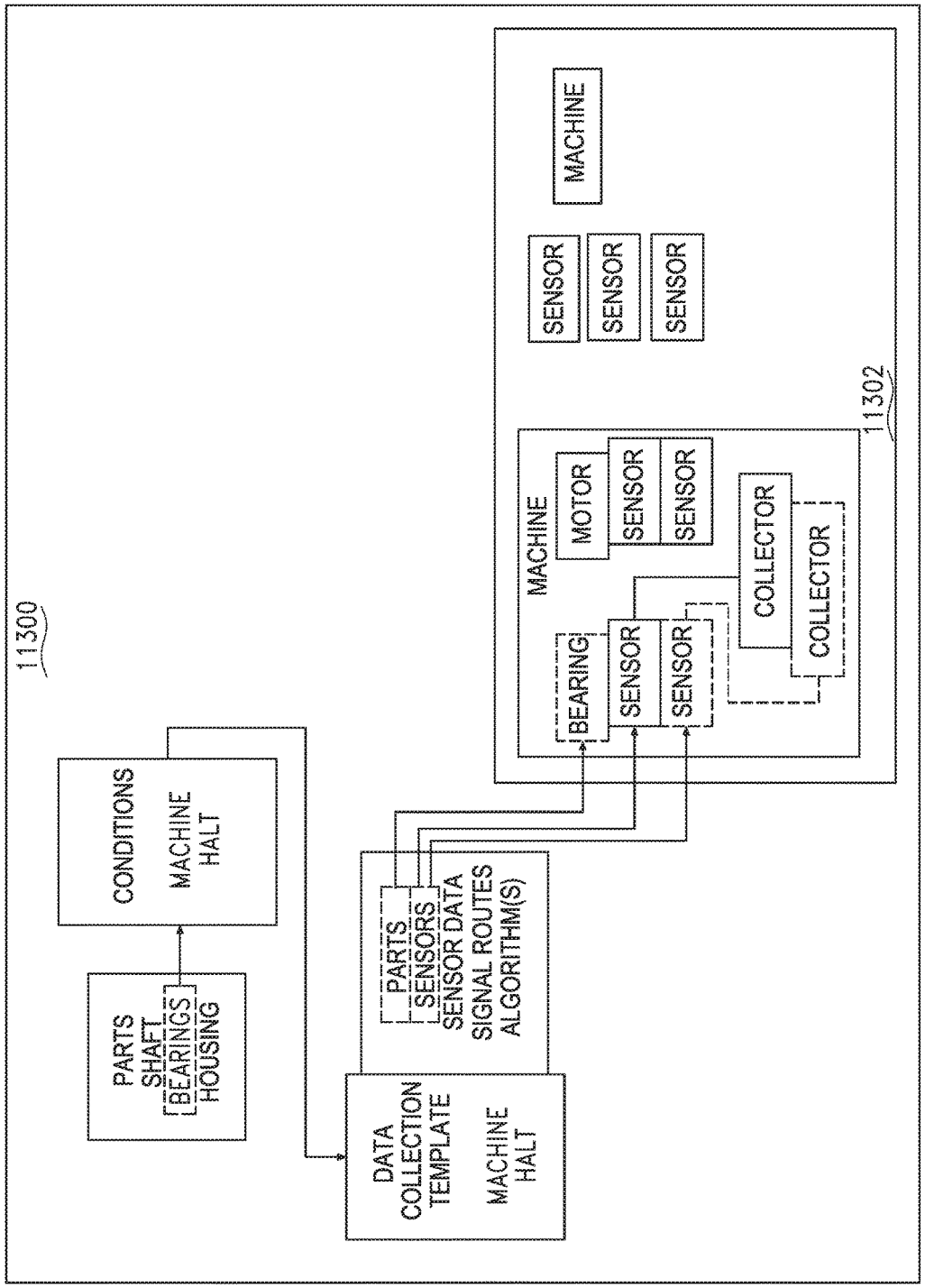
11300
CONDITIONS
MACHINE HALT
PARTS
SHAFT
BEARINGS
HOUSING
DATA COLLECTION TEMPLATE
MACHINE HALT
PARTS
SENSORS
SENSOR DATA
SIGNAL ROUTES
ALGORITHM(S)
MACHINE
SENSOR
SENSOR
SENSOR
11302
MACHINE
MOTOR
SENSOR
SENSOR
BEARING
SENSOR
SENSOR
COLLECTOR
COLLECTOR

FIG. 150

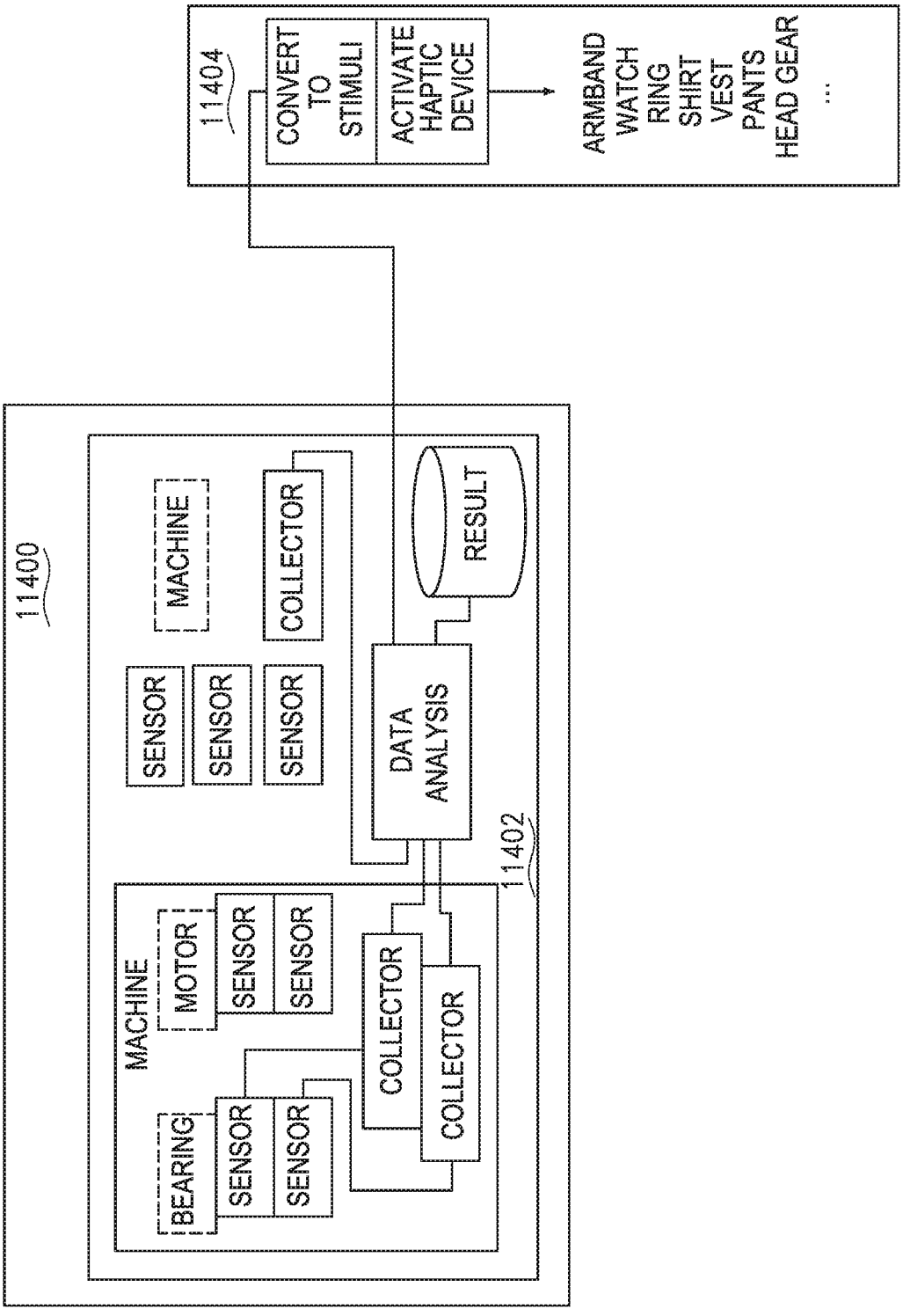
11400
MACHINE
SENSOR
SENSOR
SENSOR
COLLECTOR
DATA ANALYSIS
RESULT
11402
MACHINE
MOTOR
SENSOR
SENSOR
BEARING
SENSOR
SENSOR
COLLECTOR
COLLECTOR
11404
CONVERT TO STIMULI
ACTIVATE HAPTIC DEVICE
ARMBAND
WATCH
RING
SHIRT
VEST
PANTS
HEAD GEAR
...

FIG. 151

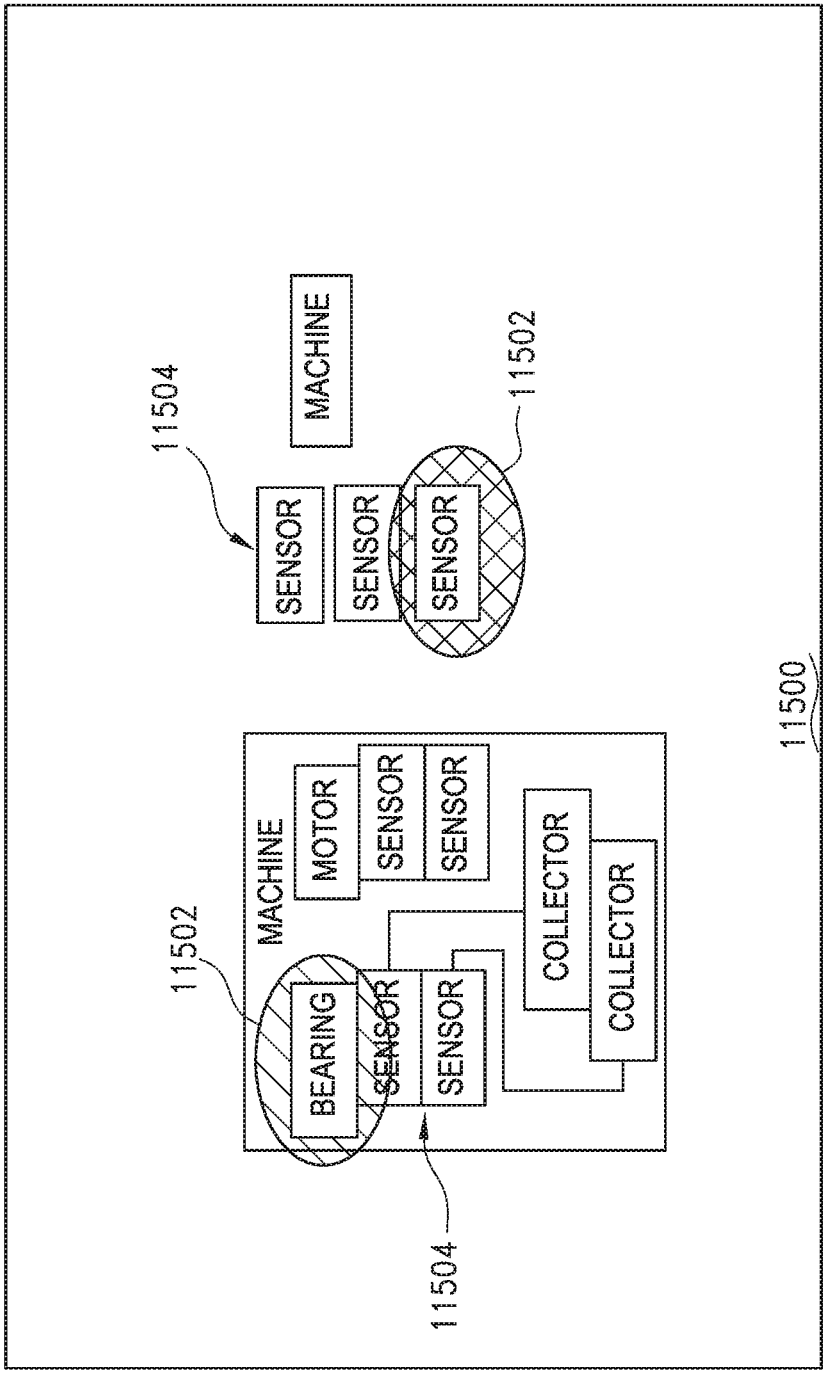
11500
MACHINE
SENSOR
SENSOR
SENSOR
11502
11504
MACHINE
BEARING
SENSOR
SENSOR
MOTOR
SENSOR
SENSOR
COLLECTOR
COLLECTOR
11502
11504

FIG. 152

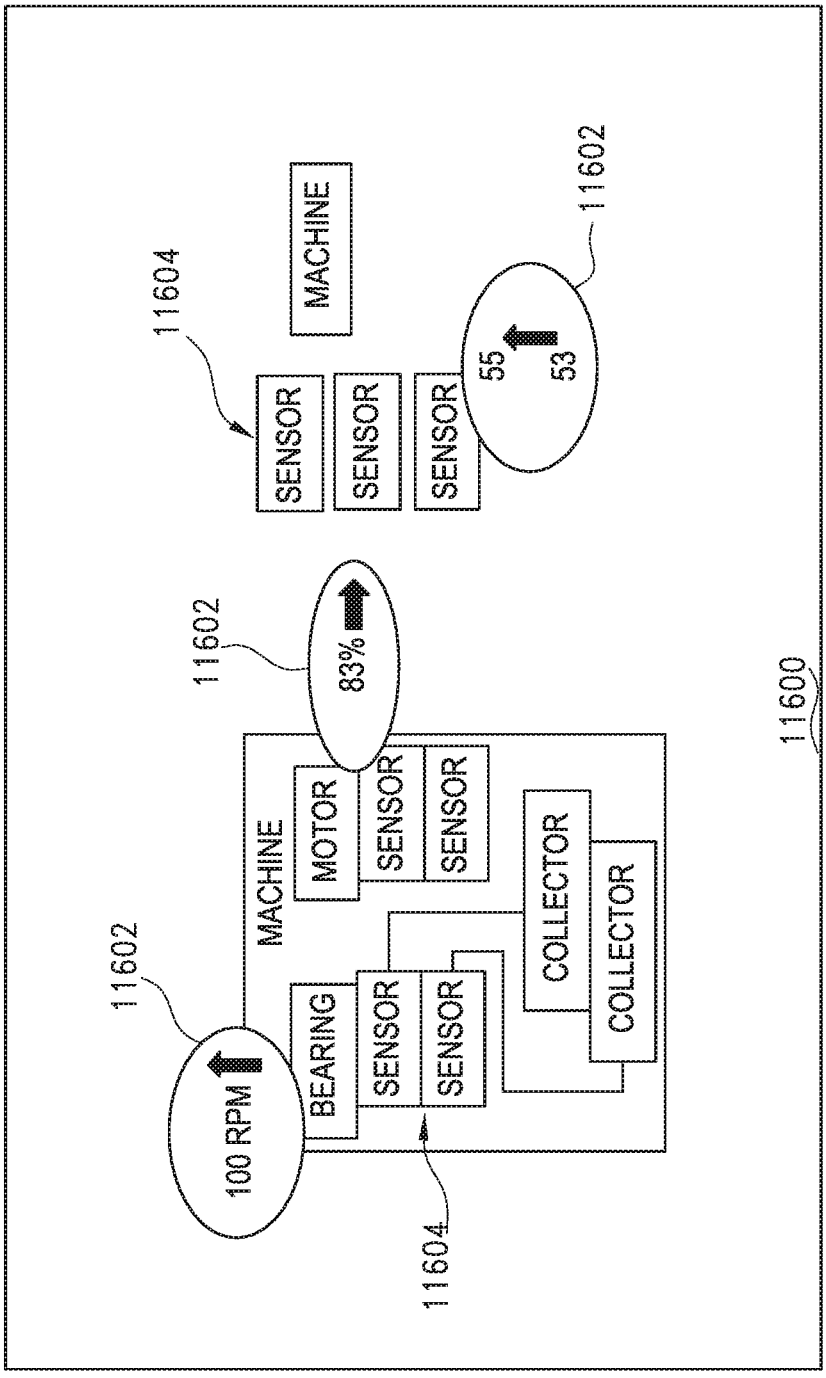
11600
MACHINE
11602
100 RPM
BEARING
SENSOR
SENSOR
11604
MACHINE
11602
83%
MOTOR
SENSOR
SENSOR
COLLECTOR
COLLECTOR
11604
SENSOR
SENSOR
SENSOR
11602
55
53

FIG. 153

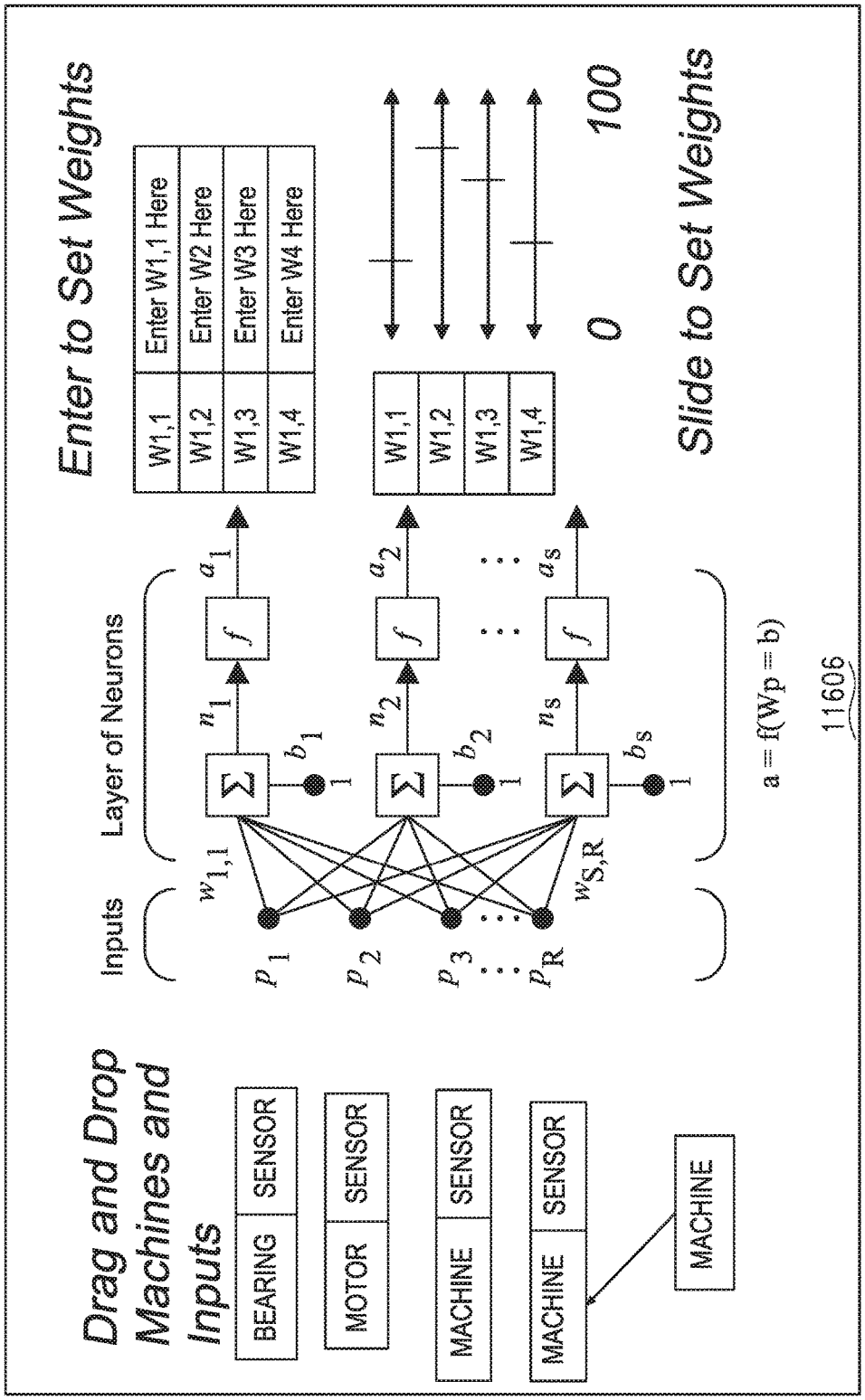
Drag and Drop Machines and Inputs
BEARING
SENSOR
MOTOR
SENSOR
MACHINE
SENSOR
MACHINE
SENSOR
MACHINE
Inputs
Layer of Neurons
Enter to Set Weights
W1,1
W1,2
W1,3
W1,4
Enter W1,1 Here
Enter W2 Here
Enter W3 Here
Enter W4 Here
Slide to Set Weights
0
100
a = f(Wp = b)
11606

FIG. 154

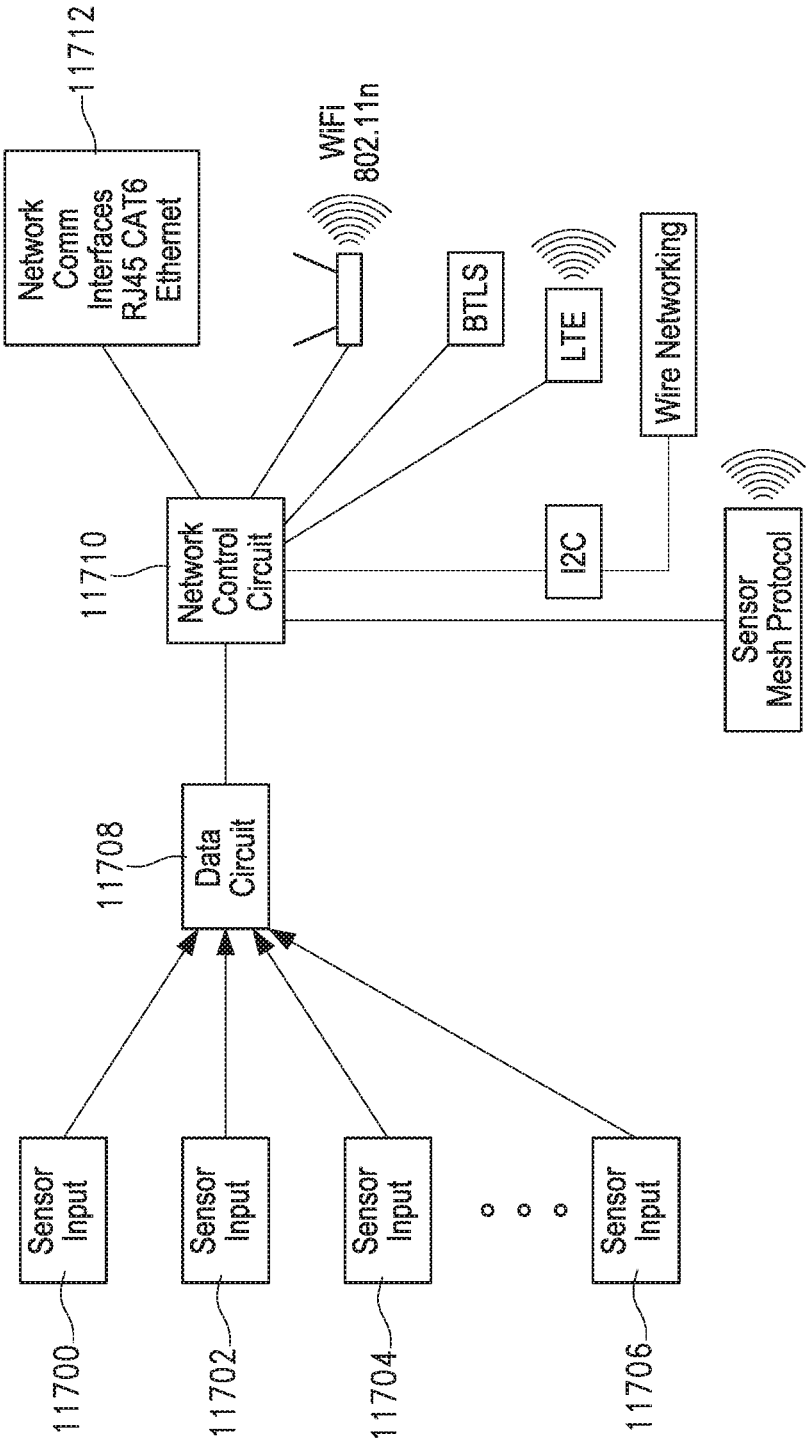
11712
Network Comm Interfaces RJ45 CAT6 Ethernet
WiFi 802.11n
BTLS
LTE
Wire Networking
11710
Network Control Circuit
I2C
Sensor Mesh Protocol
11708
Data Circuit
Sensor Input
Sensor Input
Sensor Input
Sensor Input
11700
11702
11704
11706

FIG. 155

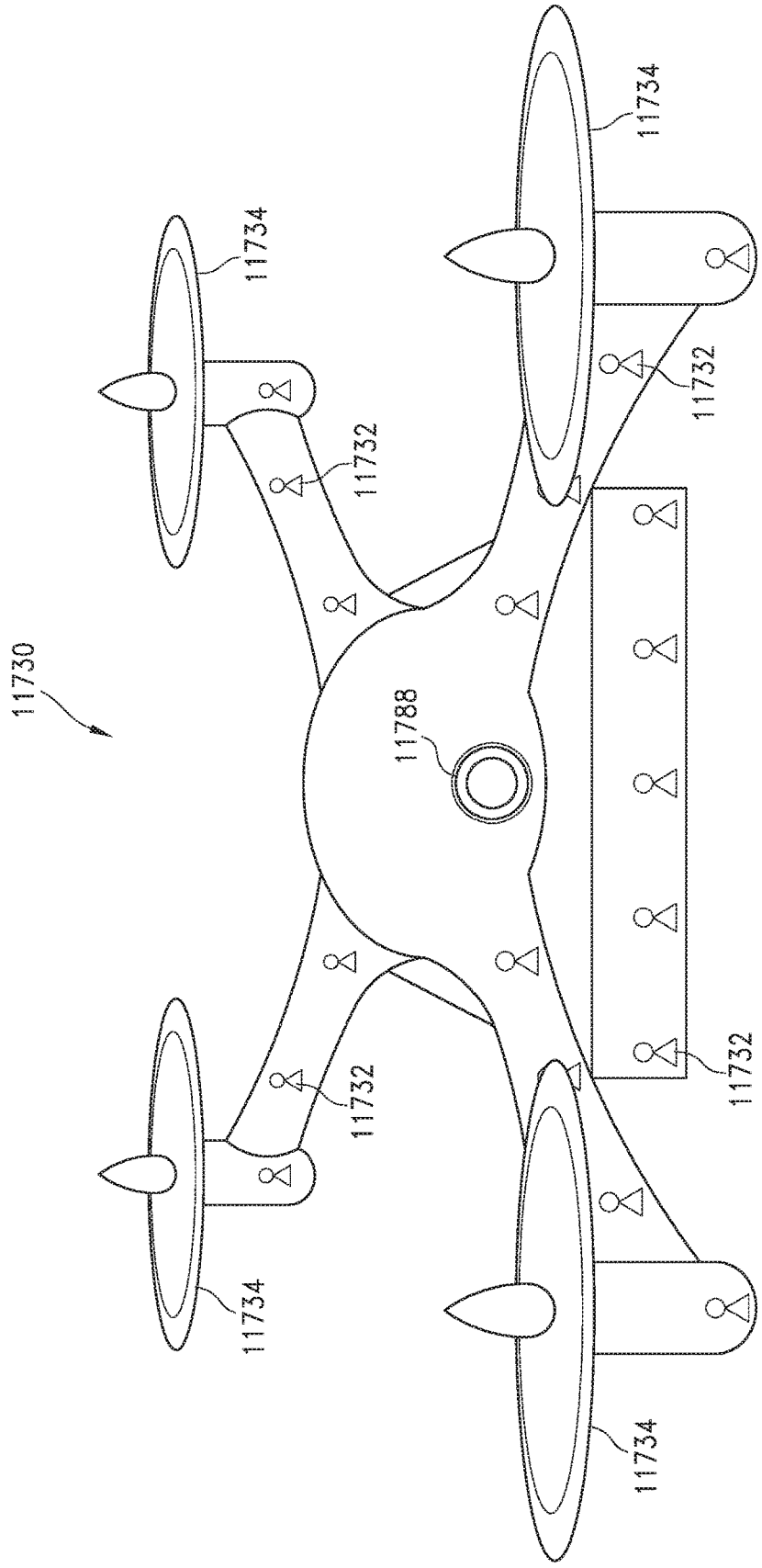
11730
11734
11734
11734
11734
11732
11732
11732
11732
11788

FIG. 156

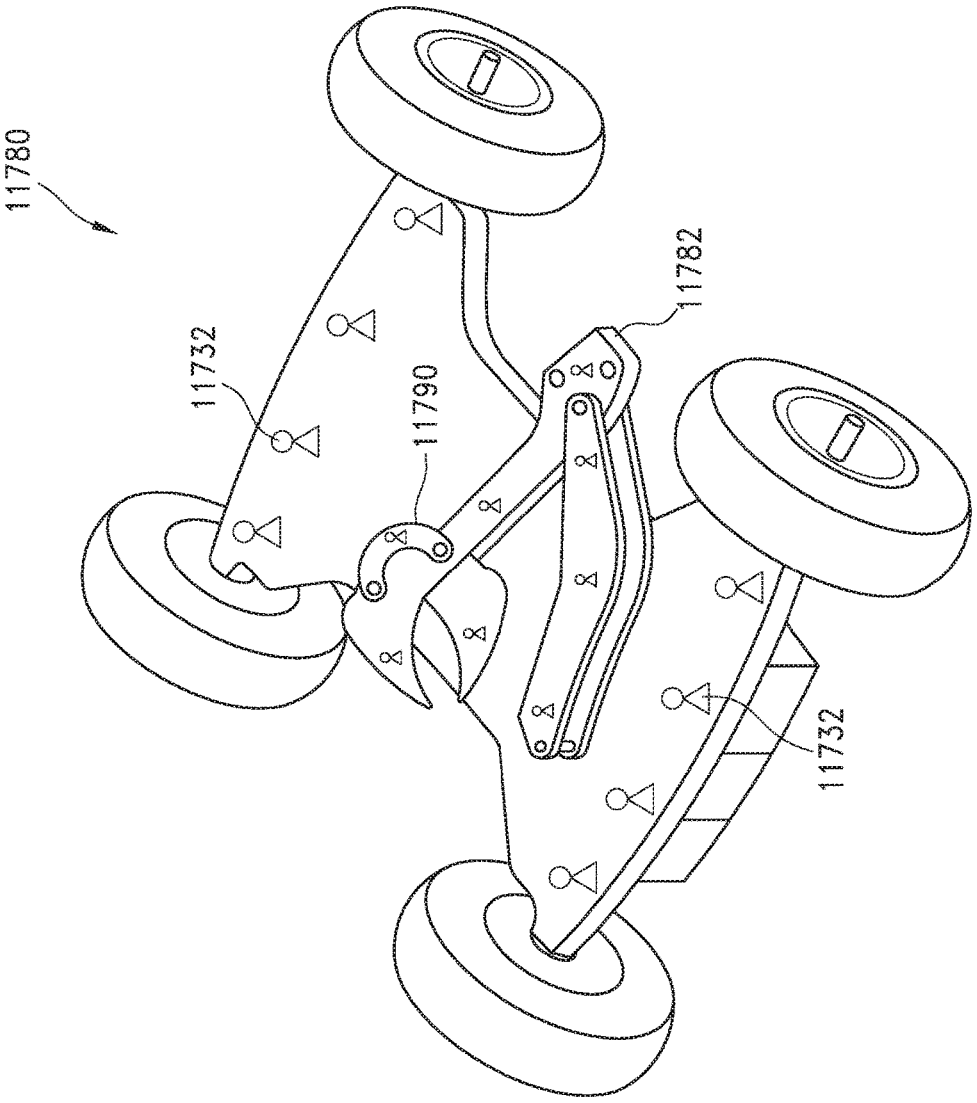


FIG. 157

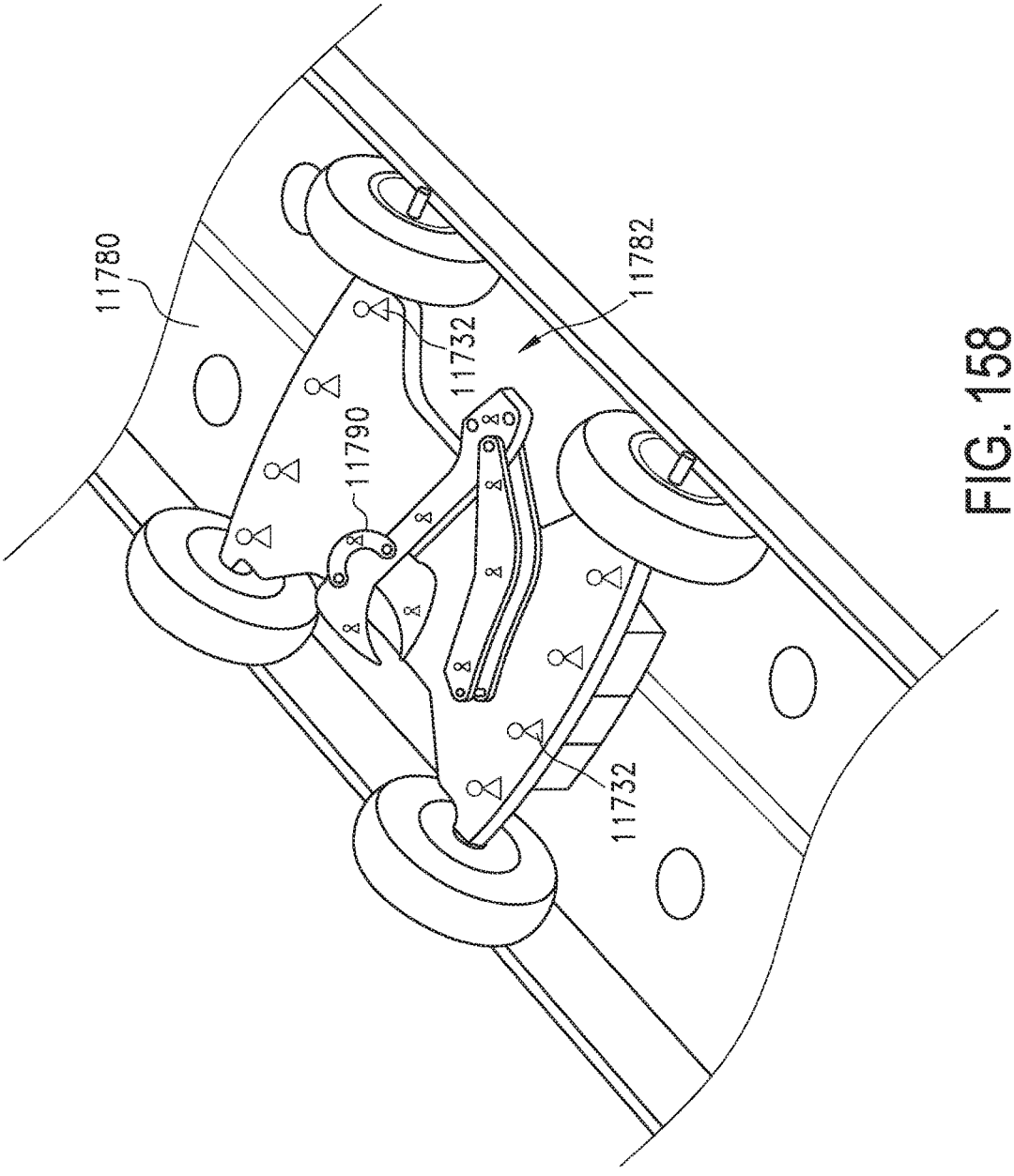


FIG. 158

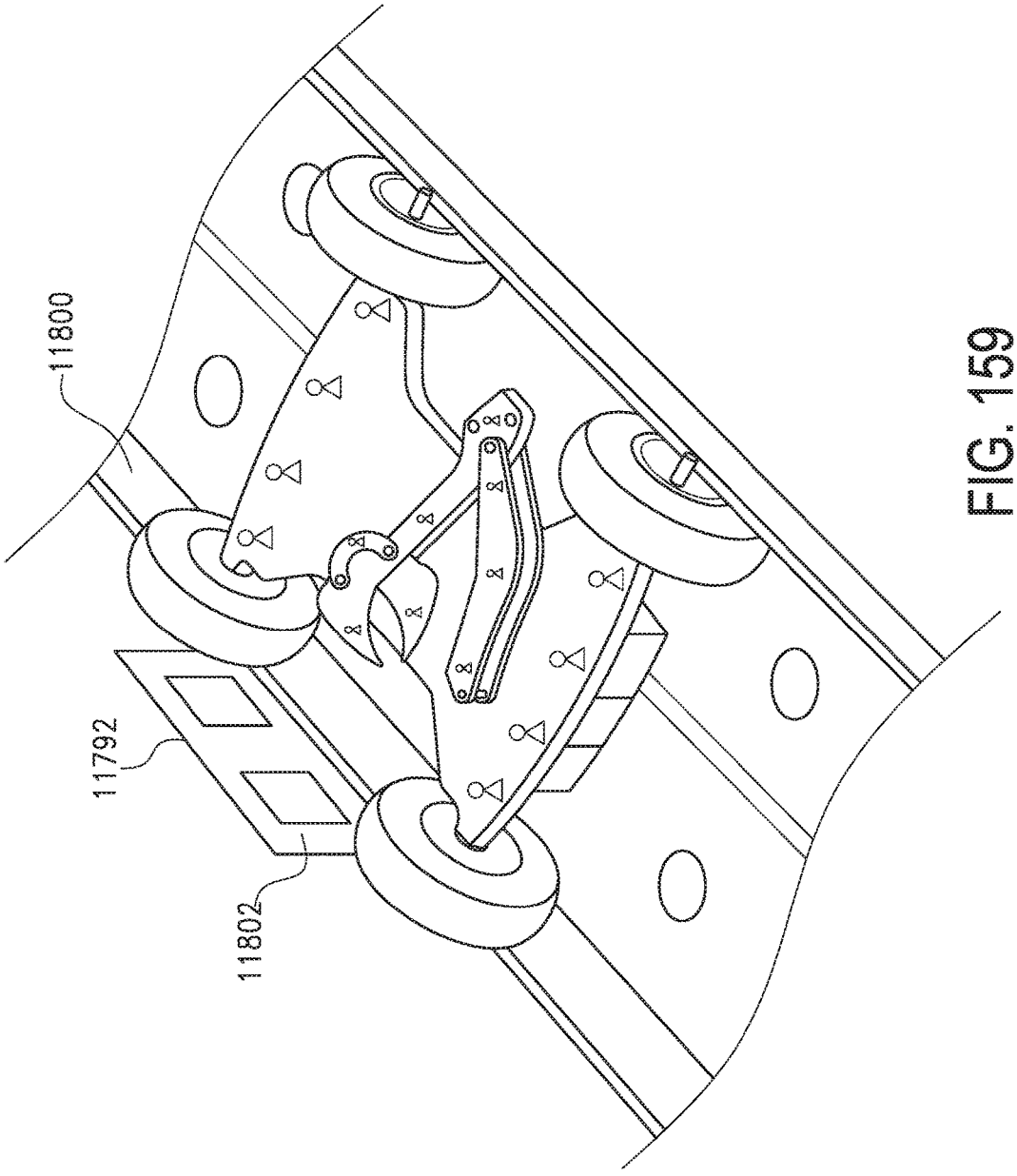


FIG. 159

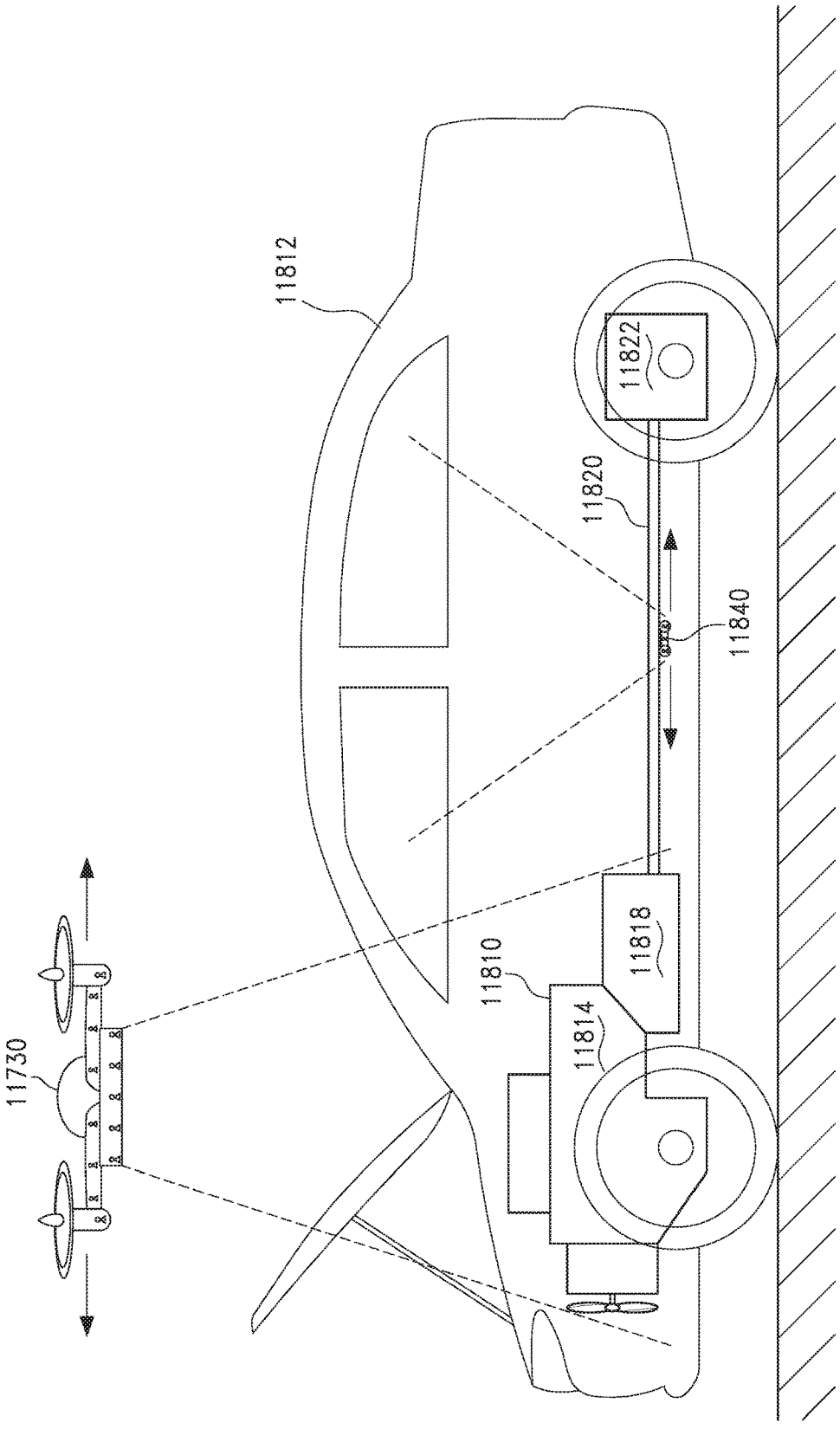


FIG. 160

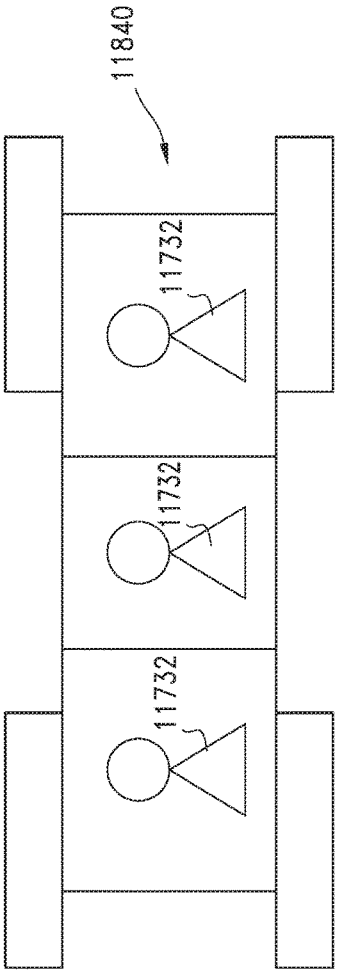


FIG. 161

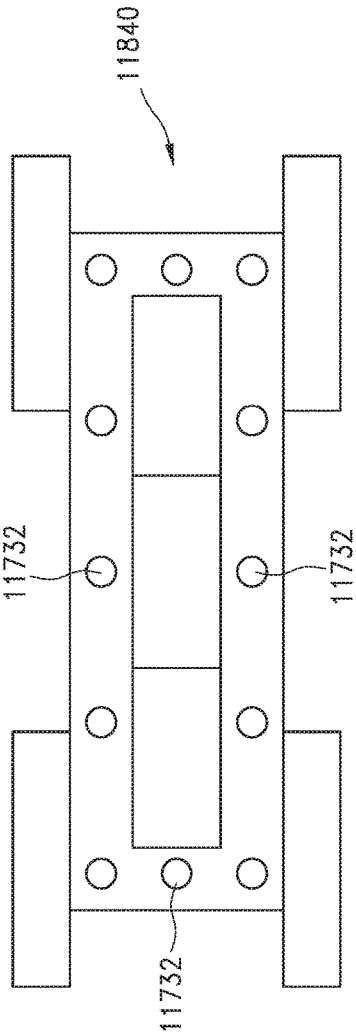


FIG. 162

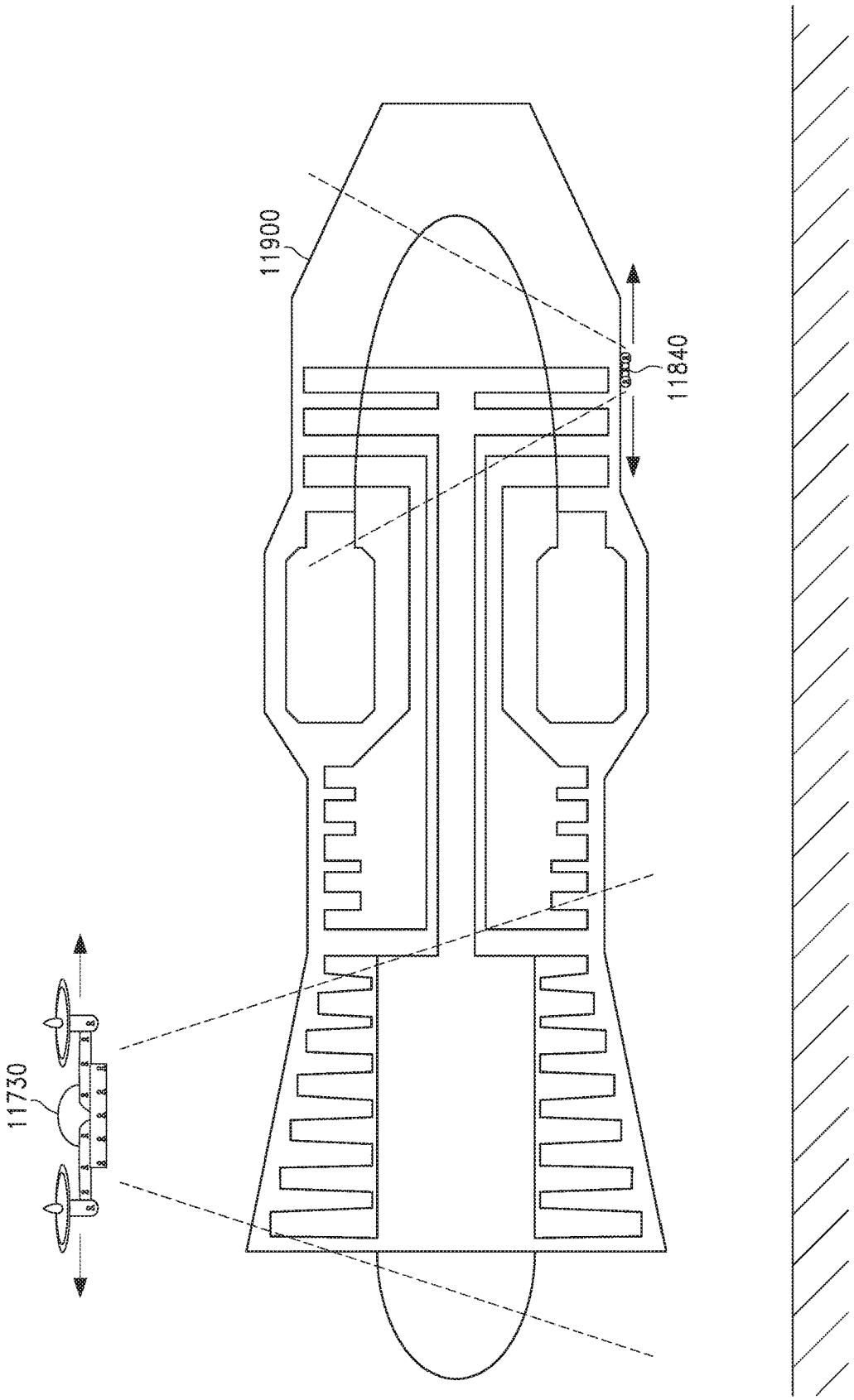


FIG. 163

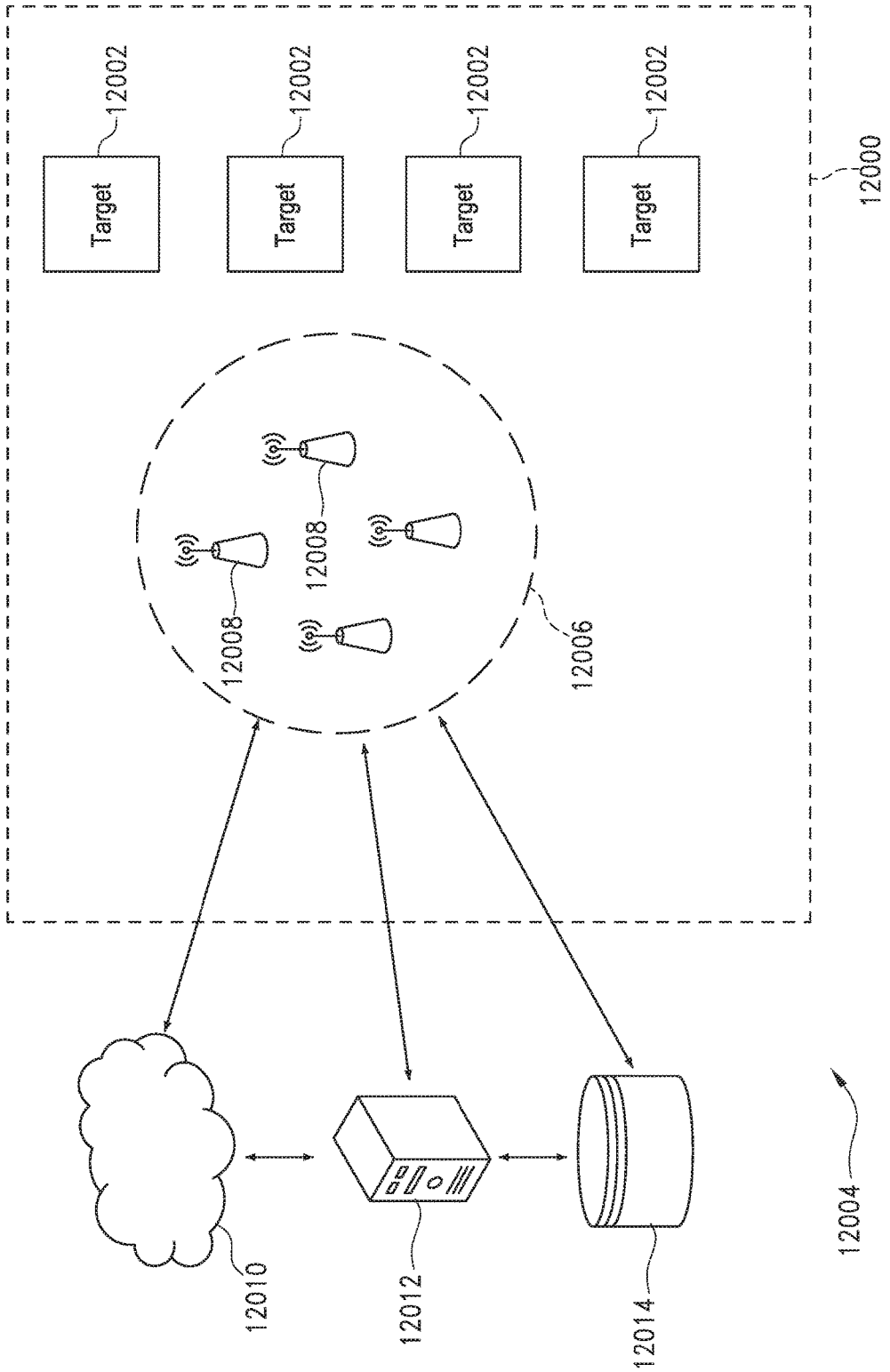
Target
12002
Target
12002
Target
12002
Target
12002
12000
12008
12008
12006
12010
12012
12014
12004

FIG. 164

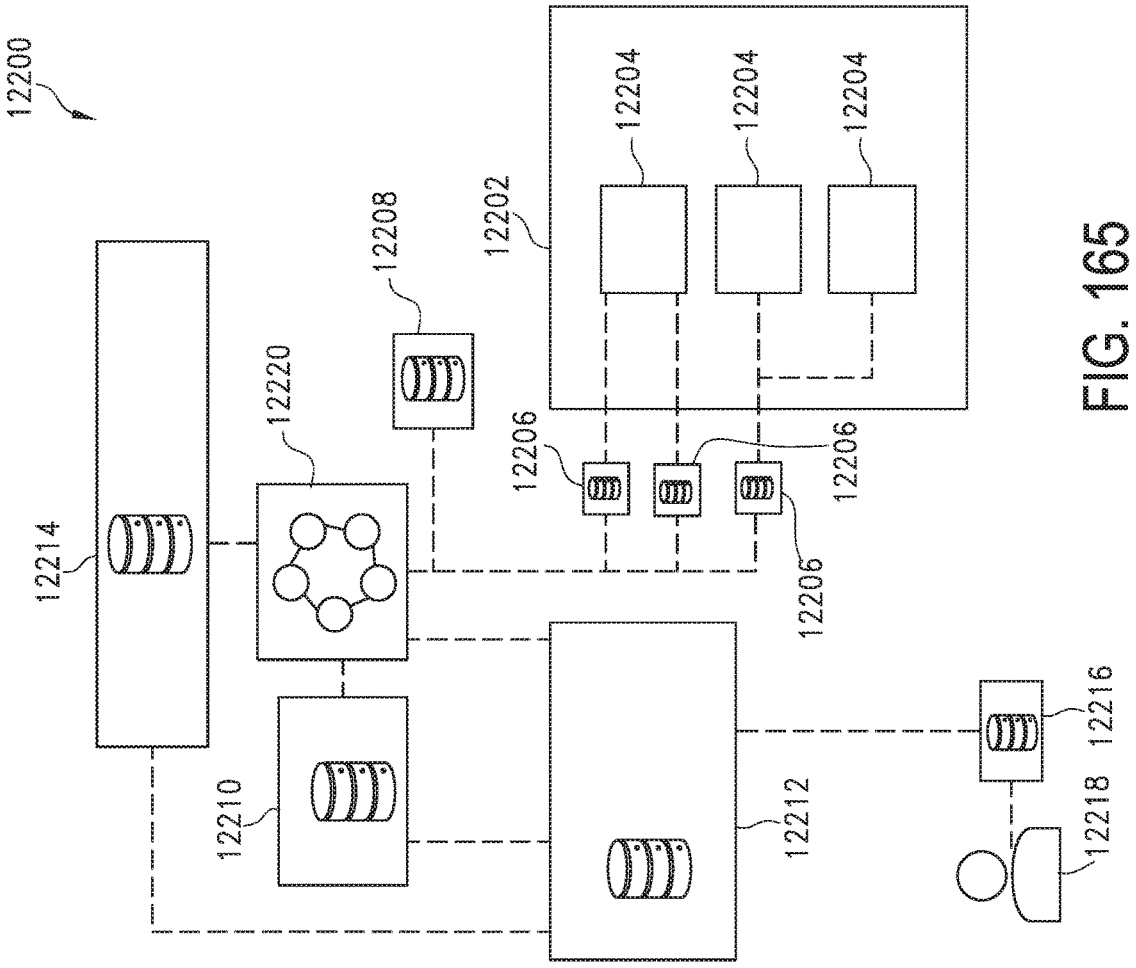
12200
12202
12204
12204
12204
12206
12206
12206
12208
12210
12212
12214
12216
12218
12220

FIG. 165

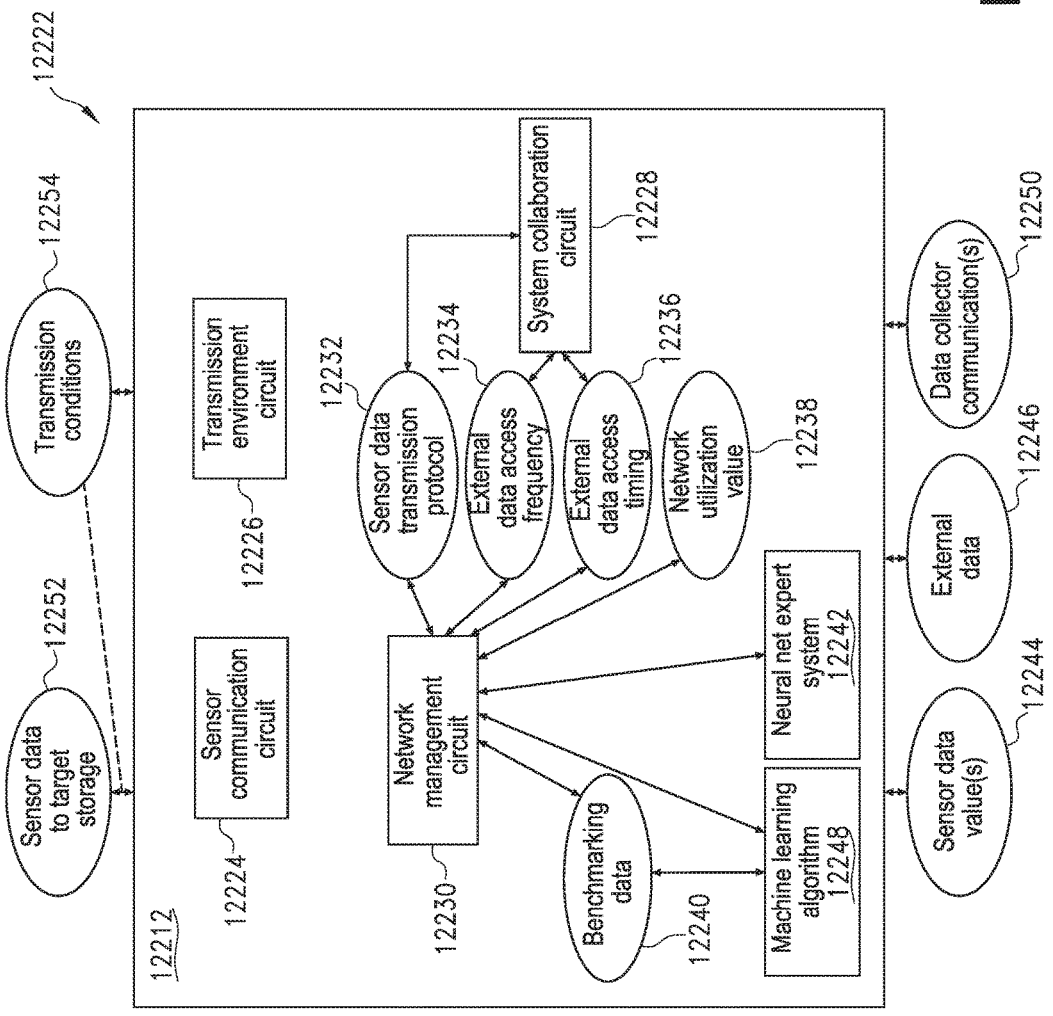
12222
12254
Transmission conditions
12252
Sensor data to target storage
12212
Sensor communication circuit
12224
Transmission environment circuit
12226
12232
Sensor data transmission protocol
12234
External data access frequency
System collaboration circuit
12228
12236
External data access timing
Network utilization value
12238
Network management circuit
12230
Benchmarking data
12240
Machine learning algorithm 12248
Neural net expert system 12242
Data collector communication(s)
12250
External data
12246
Sensor data value(s)
12244

FIG. 166

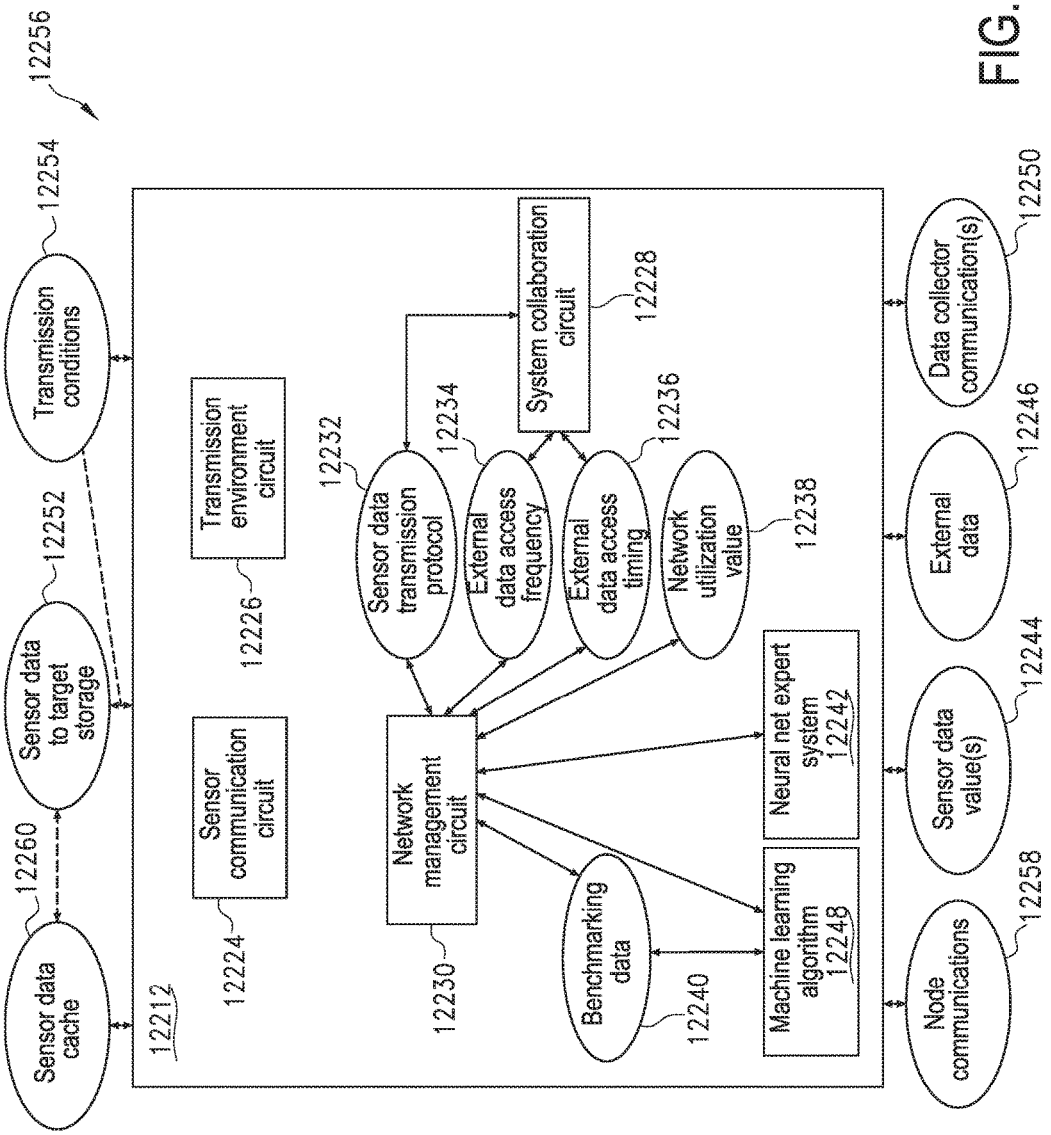
12256
12254
Transmission conditions
12252
Sensor data to target storage
12260
Sensor data cache
12212
Sensor communication circuit
12224
Transmission environment circuit
12226
Network management circuit
12230
12232
Sensor data transmission protocol
12234
External data access frequency
System collaboration circuit
12228
12236
External data access timing
Network utilization value
12238
Benchmarking data
12240
Machine learning algorithm 12248
Neural net expert system 12242
Node communications
12258
Sensor data value(s)
12244
External data
12246
Data collector communication(s)
12250

FIG. 167

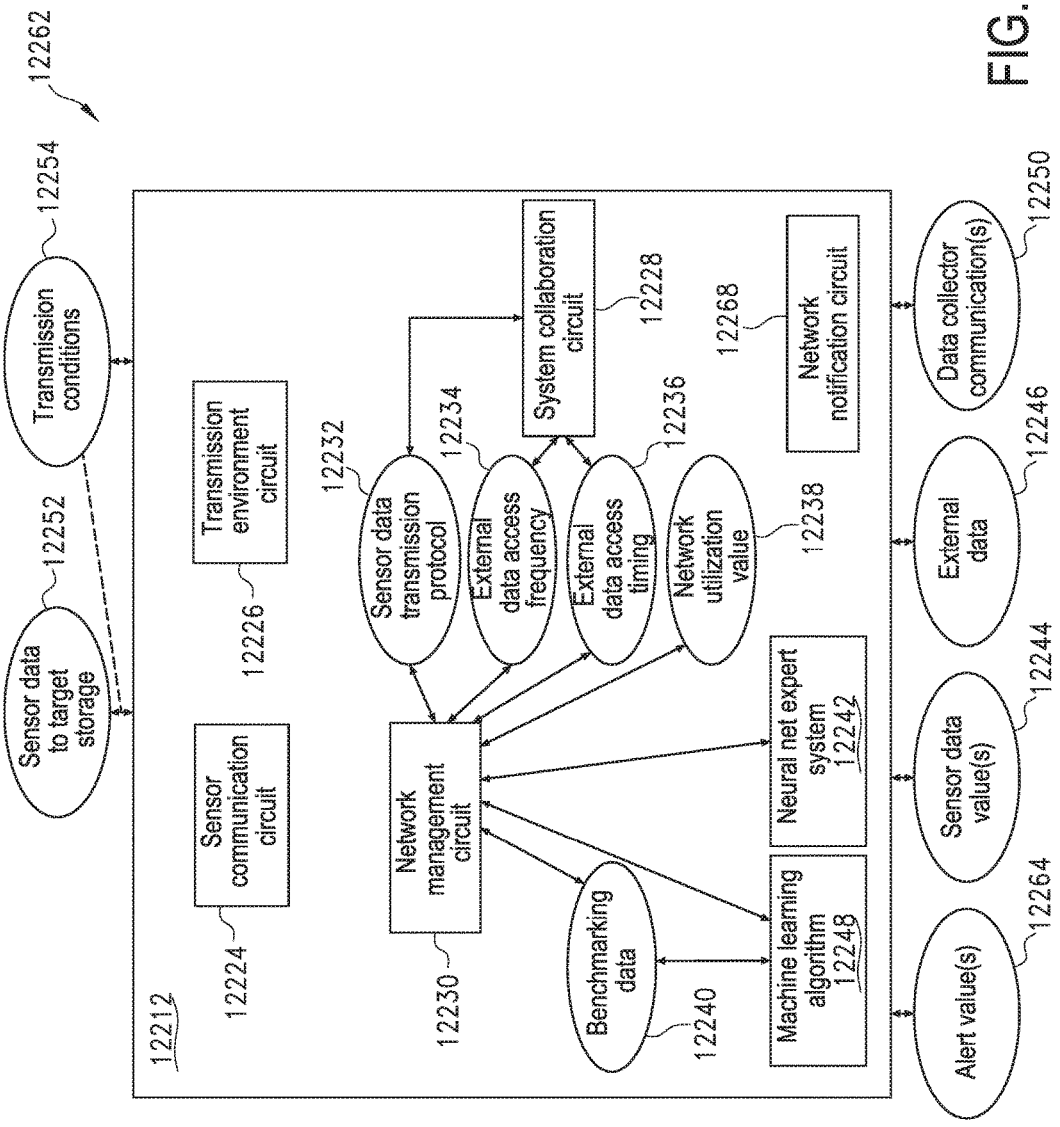
12262
12254
Transmission conditions
12252
Sensor data to target storage
12212
Sensor communication circuit
12224
Transmission environment circuit
12226
Network management circuit
12230
12232
Sensor data transmission protocol
12234
External data access frequency
System collaboration circuit
12228
12236
External data access timing
12268
Network notification circuit
Network utilization value
12238
Benchmarking data
12240
Machine learning algorithm 12248
Neural net expert system 12242
Alert value(s)
12264
Sensor data value(s)
12244
External data
12246
Data collector communication(s)
12250

FIG. 168

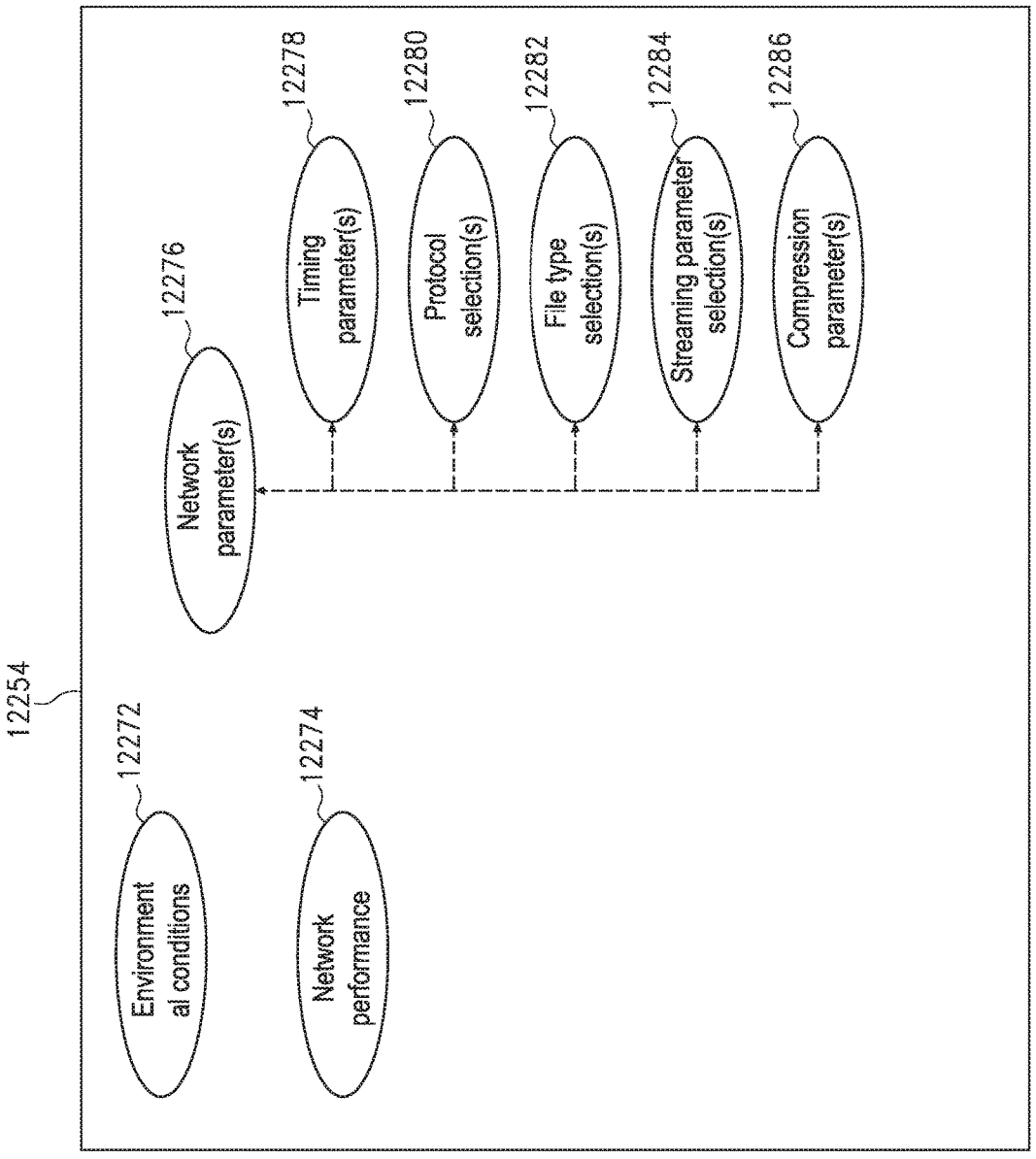
12254
12272
Environmental conditions
12274
Network performance
12276
Network parameter(s)
12278
Timing parameter(s)
12280
Protocol selection(s)
12282
File type selection(s)
12284
Streaming parameter selection(s)
12286
Compression parameter(s)

FIG. 169

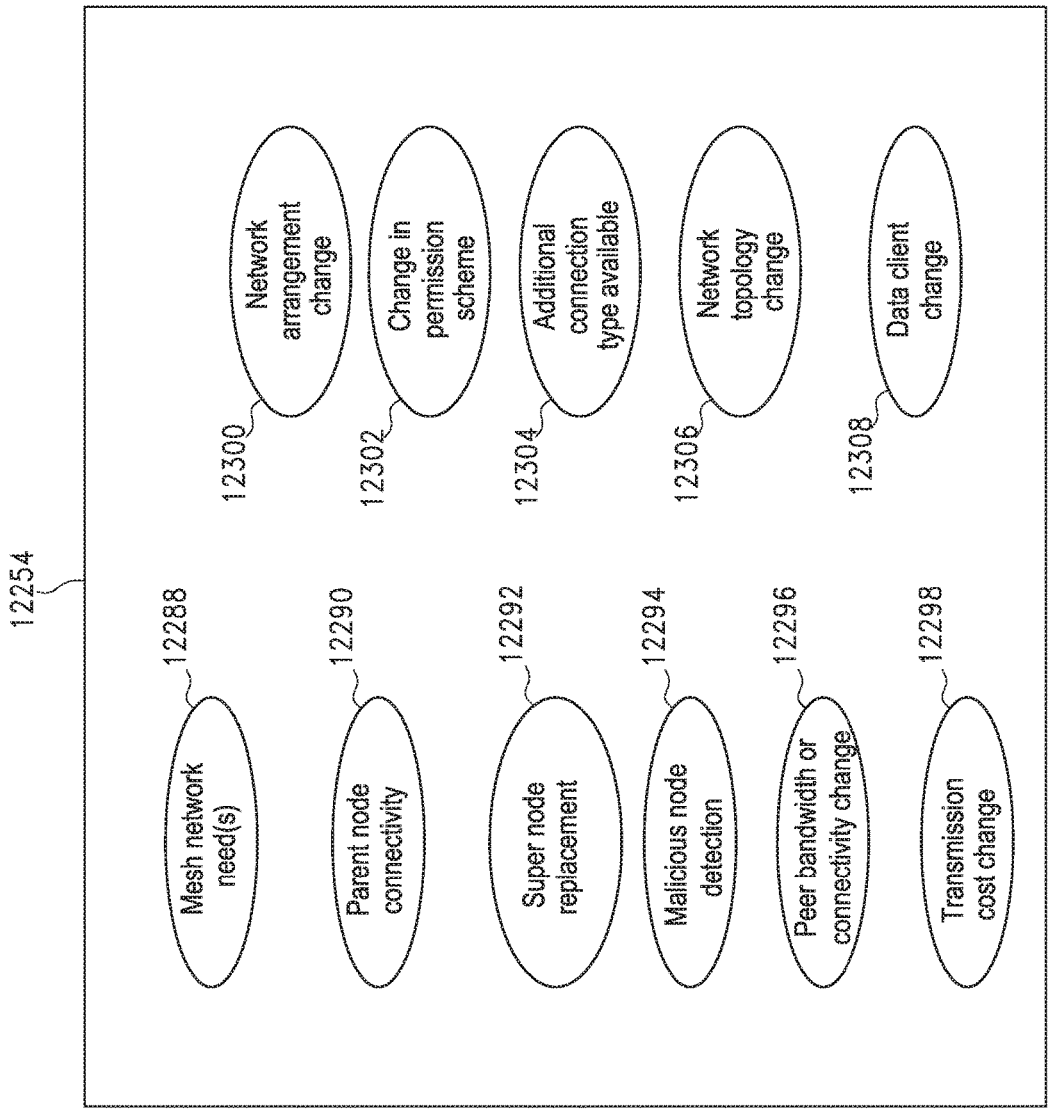
12254
12288
Mesh network need(s)
12290
Parent node connectivity
12292
Super node replacement
12294
Malicious node detection
12296
Peer bandwidth or connectivity change
12298
Transmission cost change
12300
Network arrangement change
12302
Change in permission scheme
12304
Additional connection type available
12306
Network topology change
12308
Data client change

FIG. 170

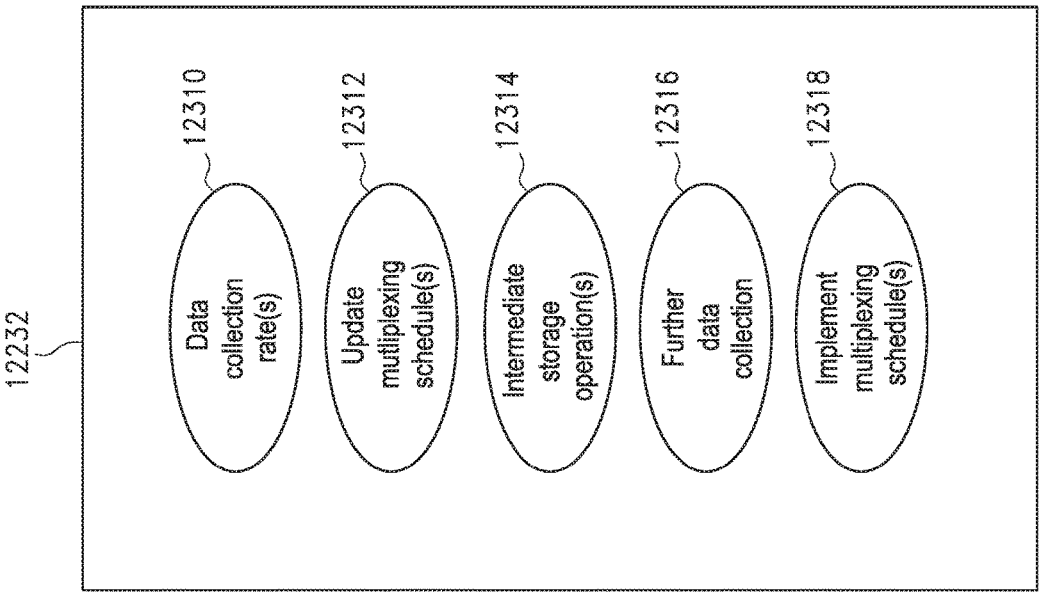
12232
12310
Data collection rate(s)
12312
Update multiplexing schedule(s)
12314
Intermediate storage operation(s)
12316
Further data collection
12318
Implement multiplexing schedule(s)

FIG. 171

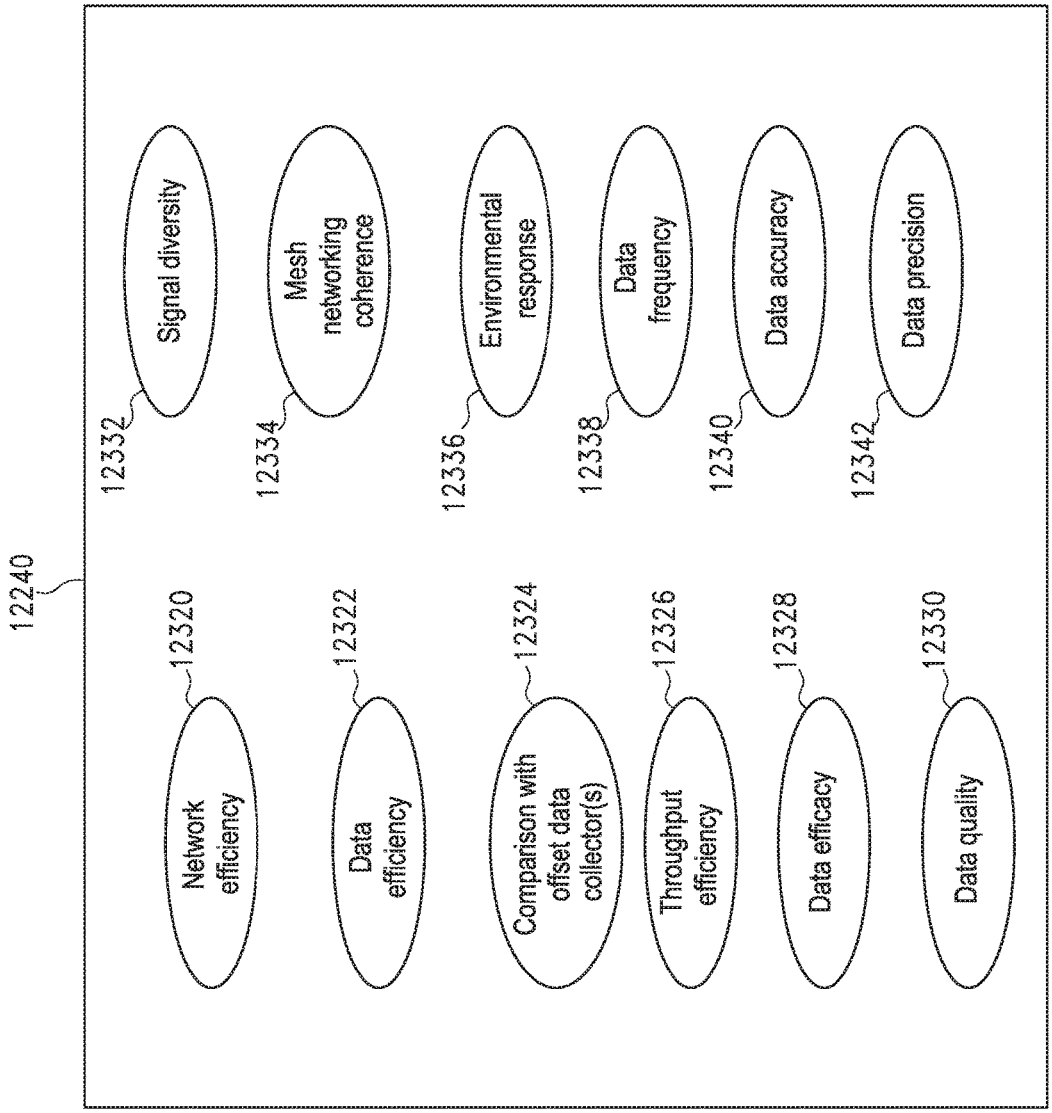
12240
12320
Network efficiency
12322
Data efficiency
12324
Comparison with offset data collector(s)
12326
Throughput efficiency
12328
Data efficacy
12330
Data quality
12332
Signal diversity
12334
Mesh networking coherence
12336
Environmental response
12338
Data frequency
12340
Data accuracy
12342
Data precision

FIG. 172

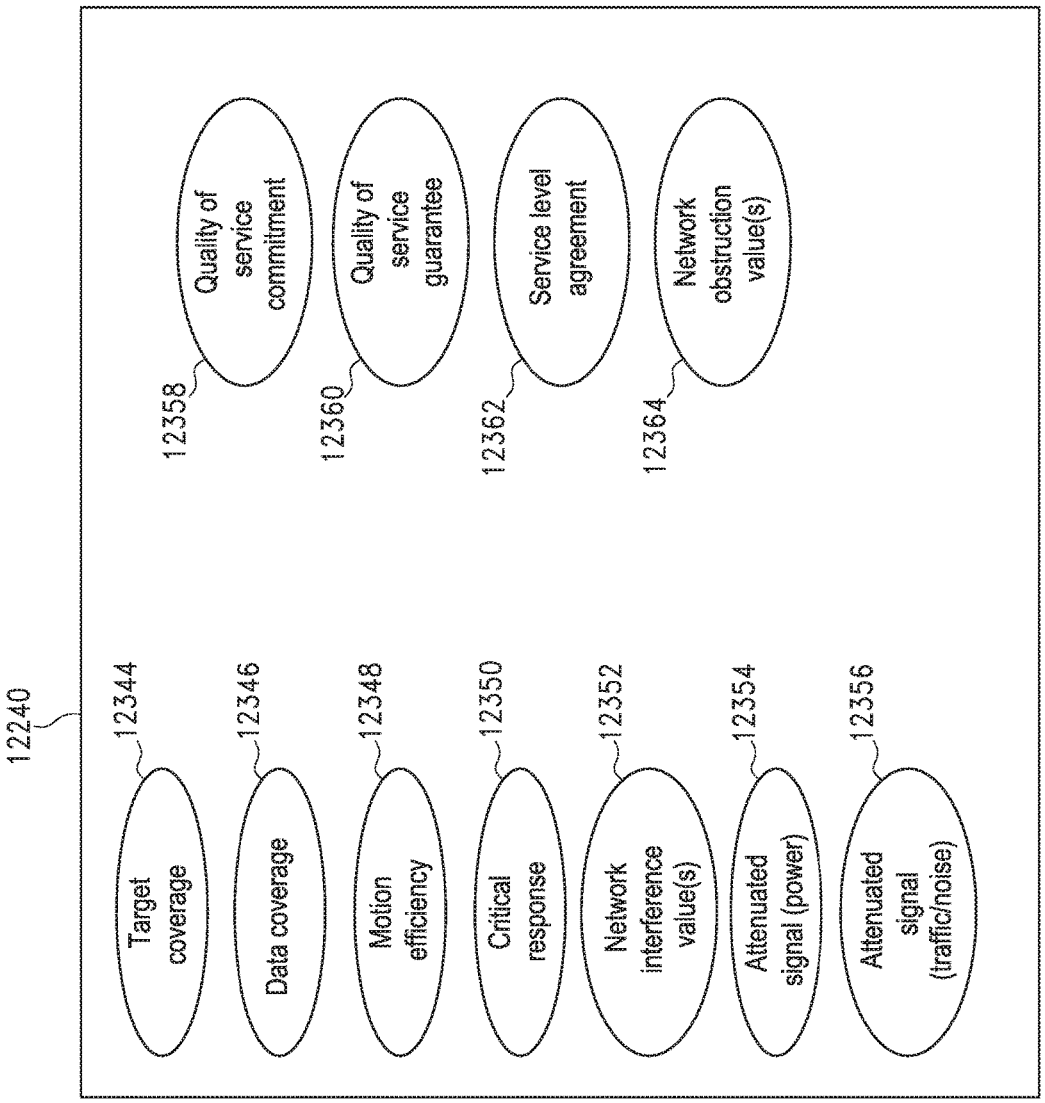
12240
12344
Target coverage
12346
Data coverage
12348
Motion efficiency
12350
Critical response
12352
Network interference value(s)
12354
Attenuated signal (power)
12356
Attenuated signal (traffic/noise)
12358
Quality of service commitment
12360
Quality of service guarantee
12362
Service level agreement
12364
Network obstruction value(s)

FIG. 173

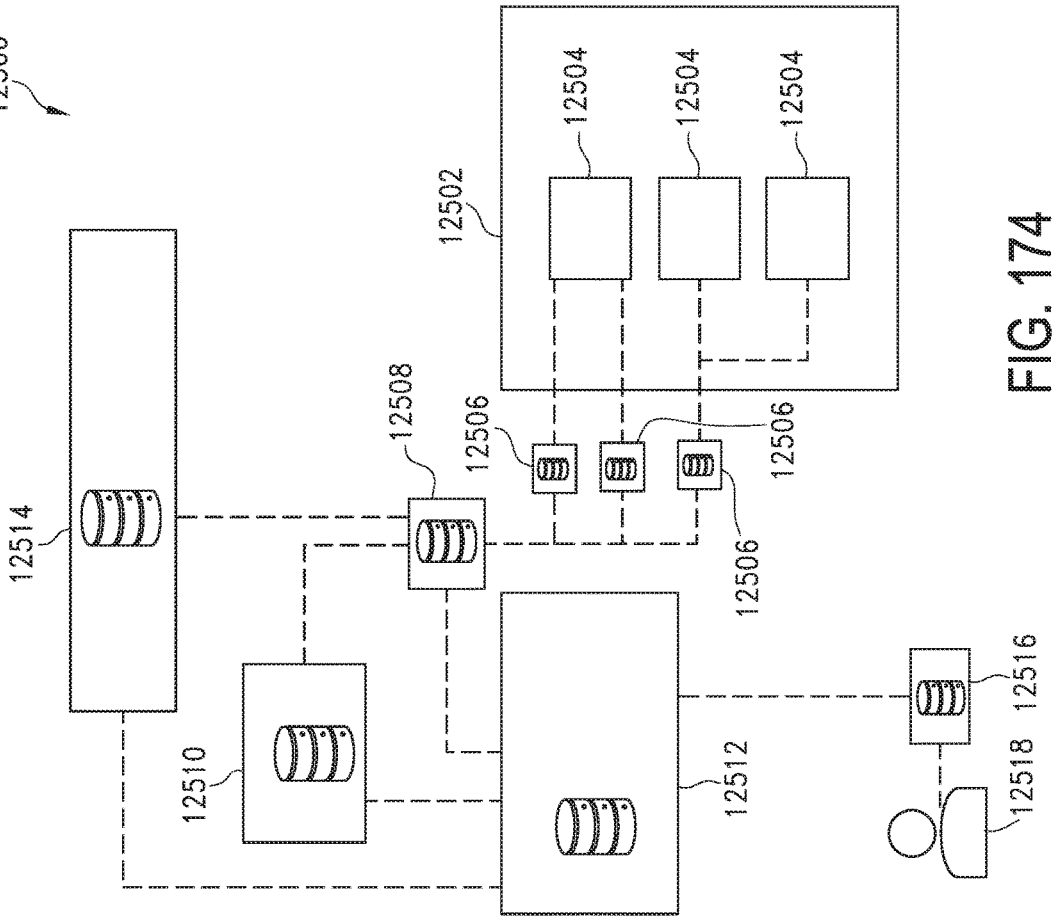
12500
12502
12504
12504
12504
12506
12506
12506
12508
12510
12512
12514
12516
12518

FIG. 174

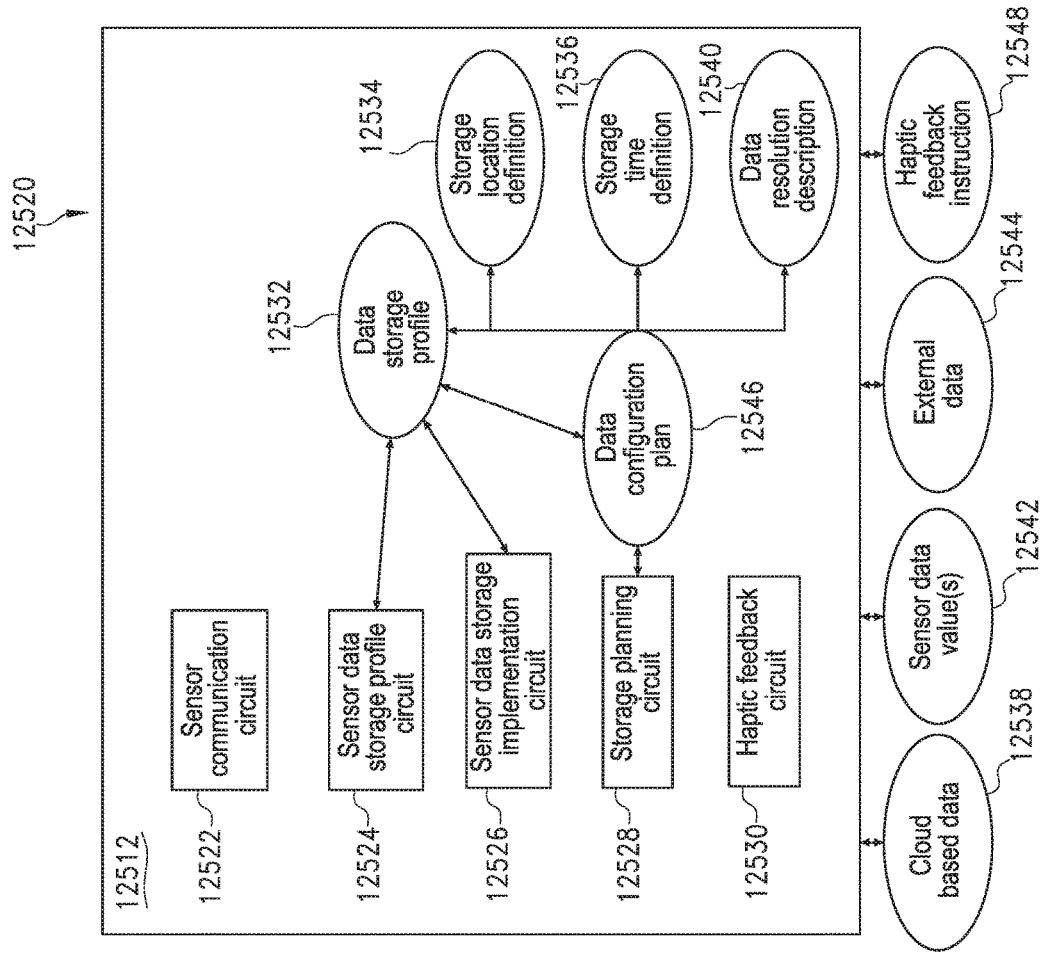
12520
12512
Sensor communication circuit
12522
Sensor data storage profile circuit
12524
Sensor data storage implementation circuit
12526
Storage planning circuit
12528
Haptic feedback circuit
12530
Data storage profile
12532
Storage location definition
12534
Storage time definition
12536
Data resolution description
12540
Data configuration plan
12546
Cloud based data
12538
Sensor data value(s)
12542
External data
12544
Haptic feedback instruction
12548

FIG. 175

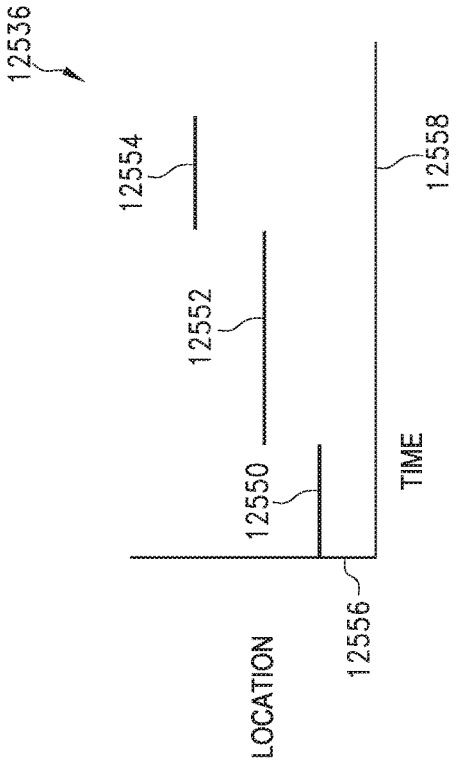


FIG. 176

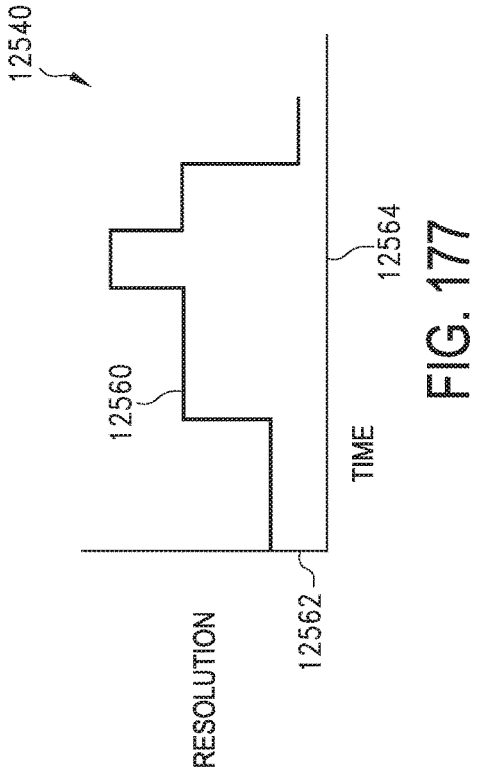


FIG. 177

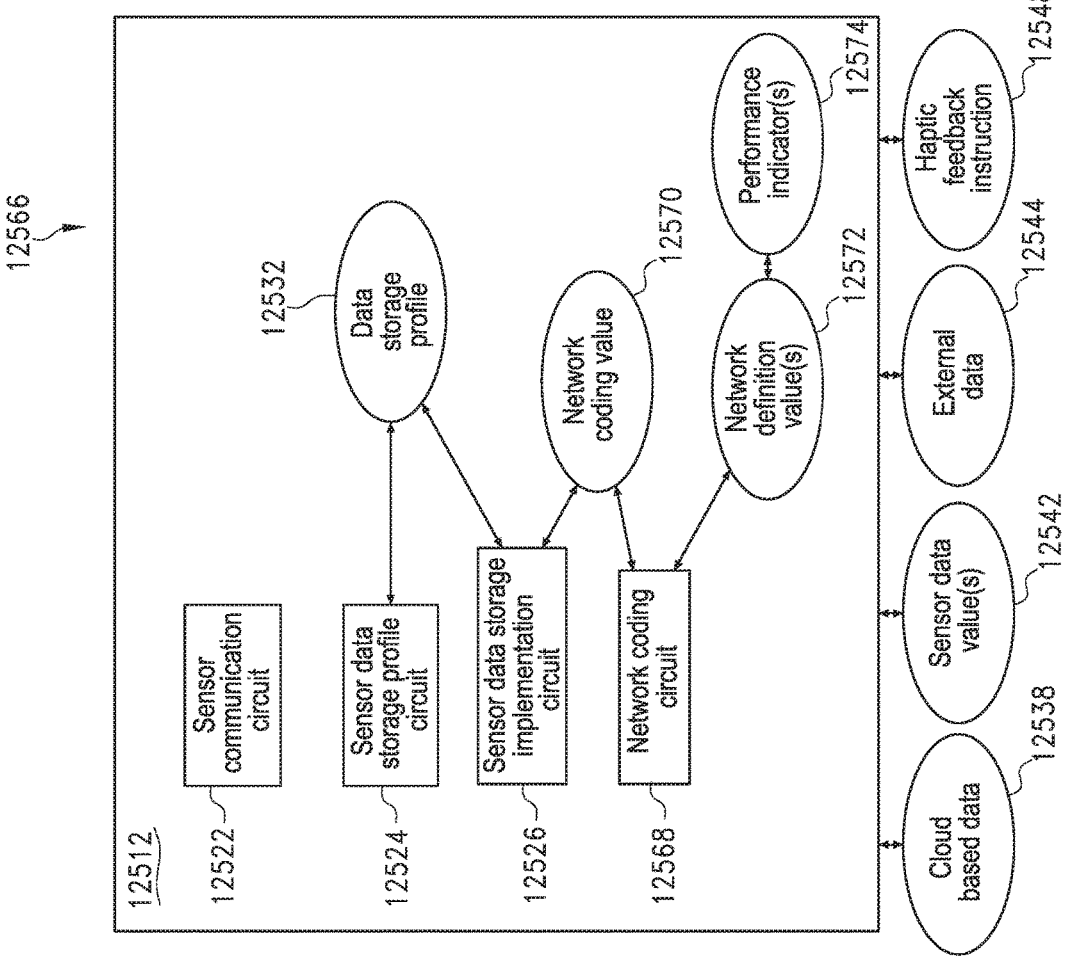
12566
12512
12522
Sensor communication circuit
12524
Sensor data storage profile circuit
12526
Sensor data storage implementation circuit
12568
Network coding circuit
12532
Data storage profile
Network coding value
12570
Network definition value(s)
12572
Performance indicator(s)
12574
Cloud based data
12538
Sensor data value(s)
12542
External data
12544
Haptic feedback instruction
12548

FIG. 178

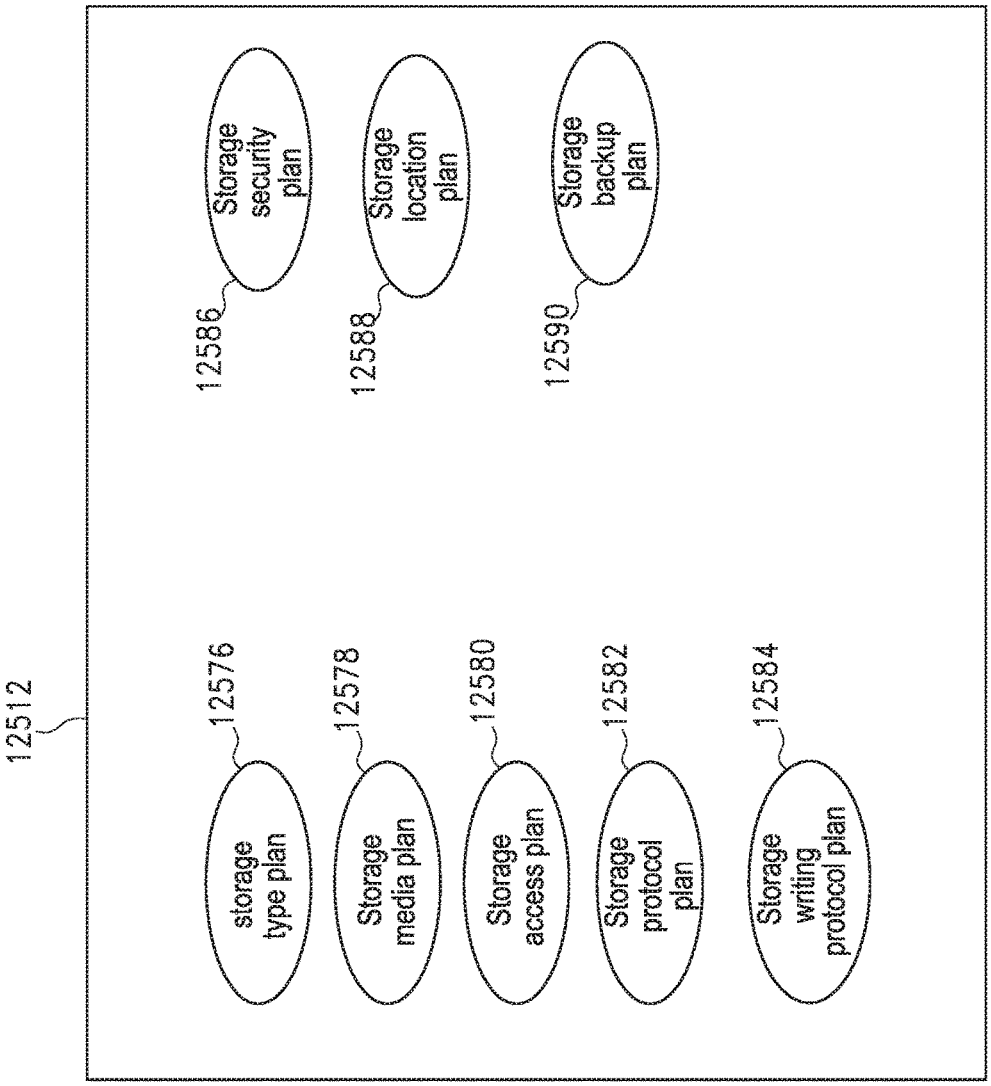
12512
12576
storage type plan
12578
Storage media plan
12580
Storage access plan
12582
Storage protocol plan
12584
Storage writing protocol plan
12586
Storage security plan
12588
Storage location plan
12590
Storage backup plan

FIG. 179

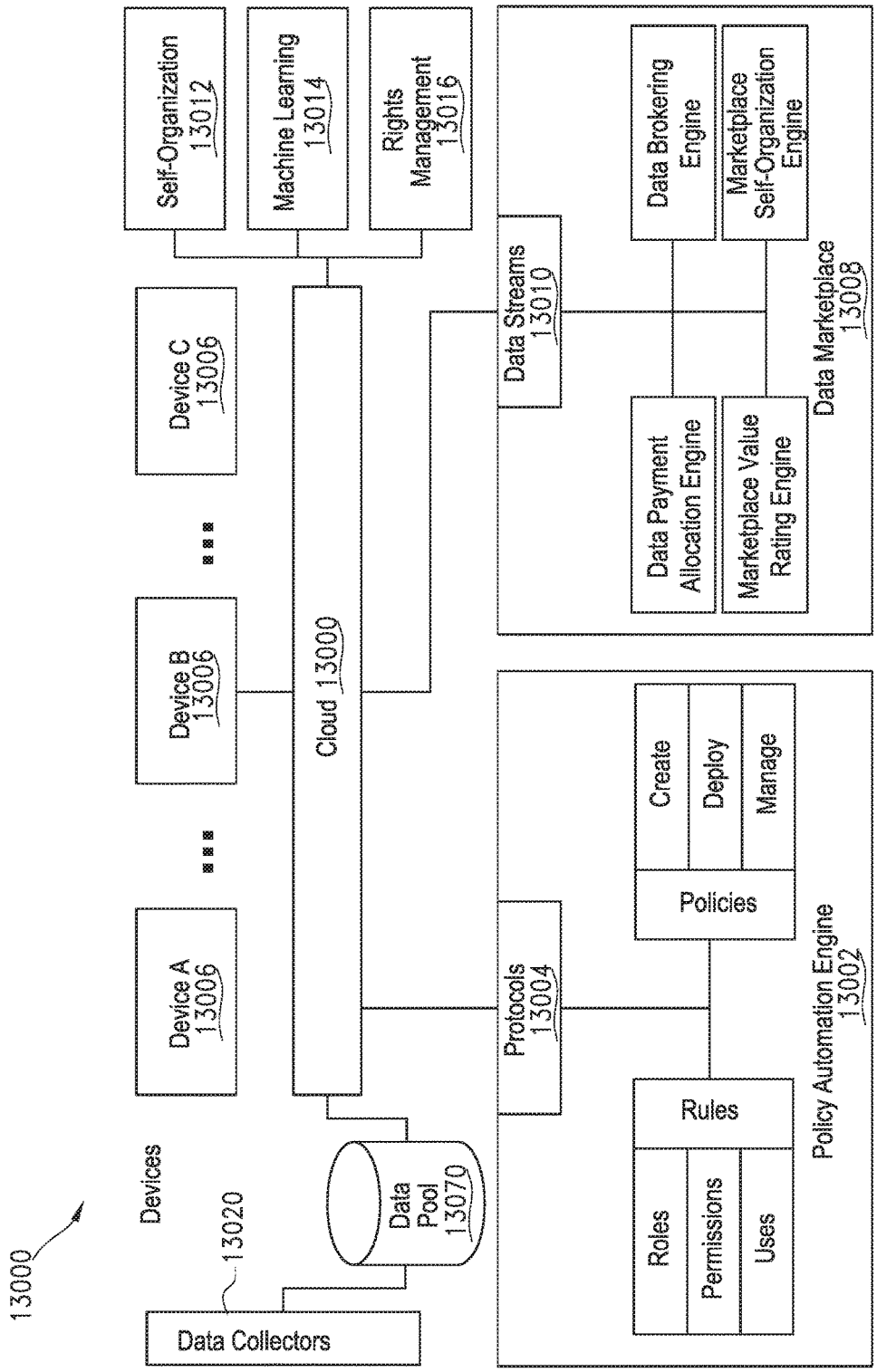
13000
Devices
13020
Data Collectors
Device A 13006
Device B 13006
Device C 13006
Cloud 13000
Data Pool 13070
Self-Organization 13012
Machine Learning 13014
Rights Management 13016
Protocols 13004
Policy Automation Engine 13002
Create
Deploy
Manage
Policies
Rules
Roles
Permissions
Uses
Data Streams 13010
Data Marketplace 13008
Data Brokering Engine
Marketplace Self-Organization Engine
Data Payment Allocation Engine
Marketplace Value Rating Engine

FIG. 180

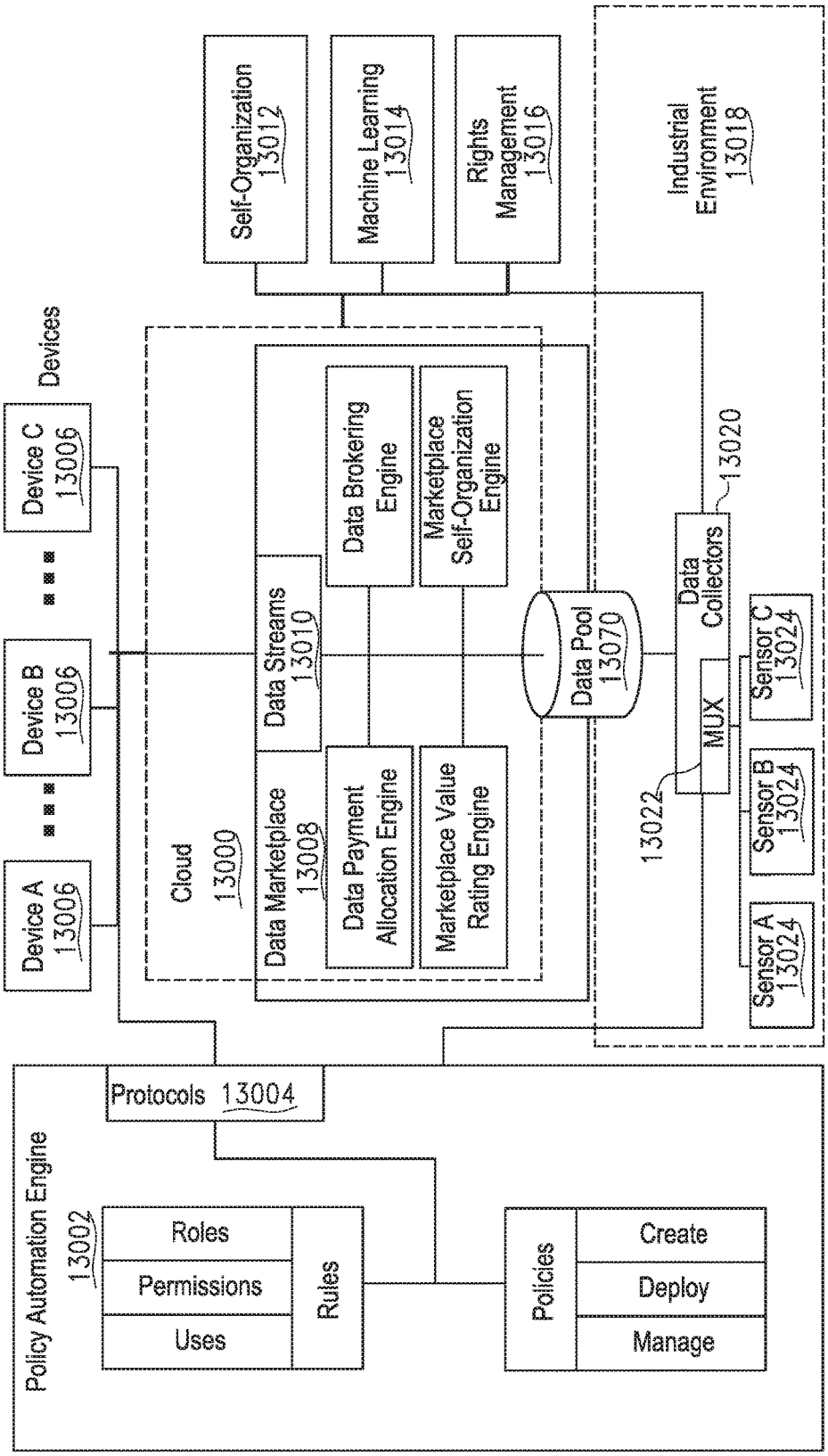
Self-Organization 13012
Machine Learning 13014
Rights Management 13016
Industrial Environment 13018
Devices
Device C 13006
Device B 13006
Device A 13006
Cloud 13000
Data Marketplace 13008
Data Streams 13010
Data Brokering Engine
Marketplace Self-Organization Engine
Data Payment Allocation Engine
Marketplace Value Rating Engine
Data Pool 13070
13020
Data Collectors
MUX
13022
Sensor C 13024
Sensor B 13024
Sensor A 13024
Protocols 13004
Policy Automation Engine 13002
Roles
Permissions
Uses
Rules
Policies
Create
Deploy
Manage

FIG. 181

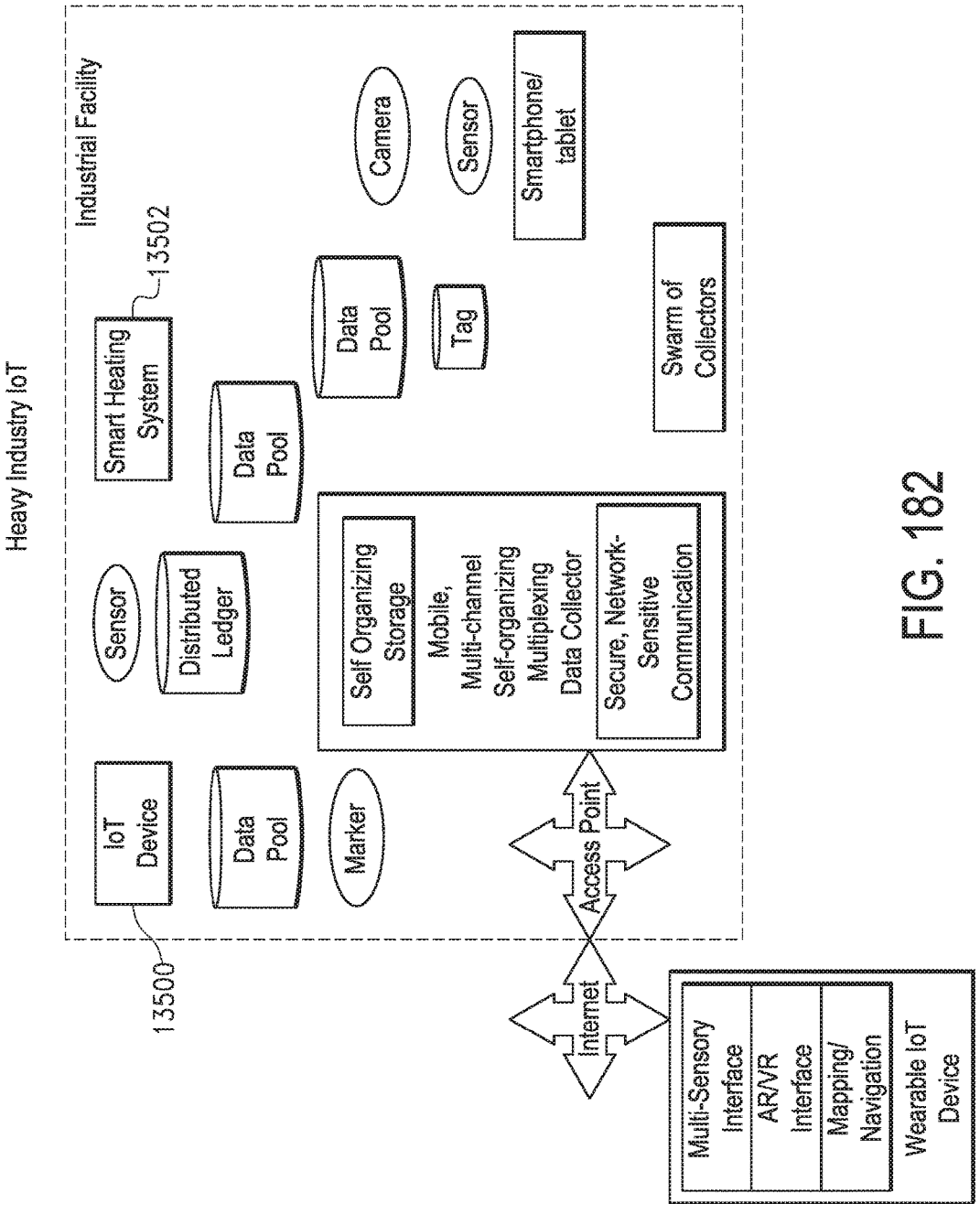
Heavy Industry IoT
Industrial Facility
13500
IoT Device
Data Pool
Marker
Sensor
Distributed Ledger
Smart Heating System
13502
Data Pool
Self Organizing Storage
Mobile, Multi-channel Self-organizing Multiplexing Data Collector
Secure, Network-Sensitive Communication
Data Pool
Tag
Camera
Sensor
Smartphone/ tablet
Swarm of Collectors
Access Point
Internet
Multi-Sensory Interface
AR/VR Interface
Mapping/ Navigation
Wearable IoT Device

FIG. 182

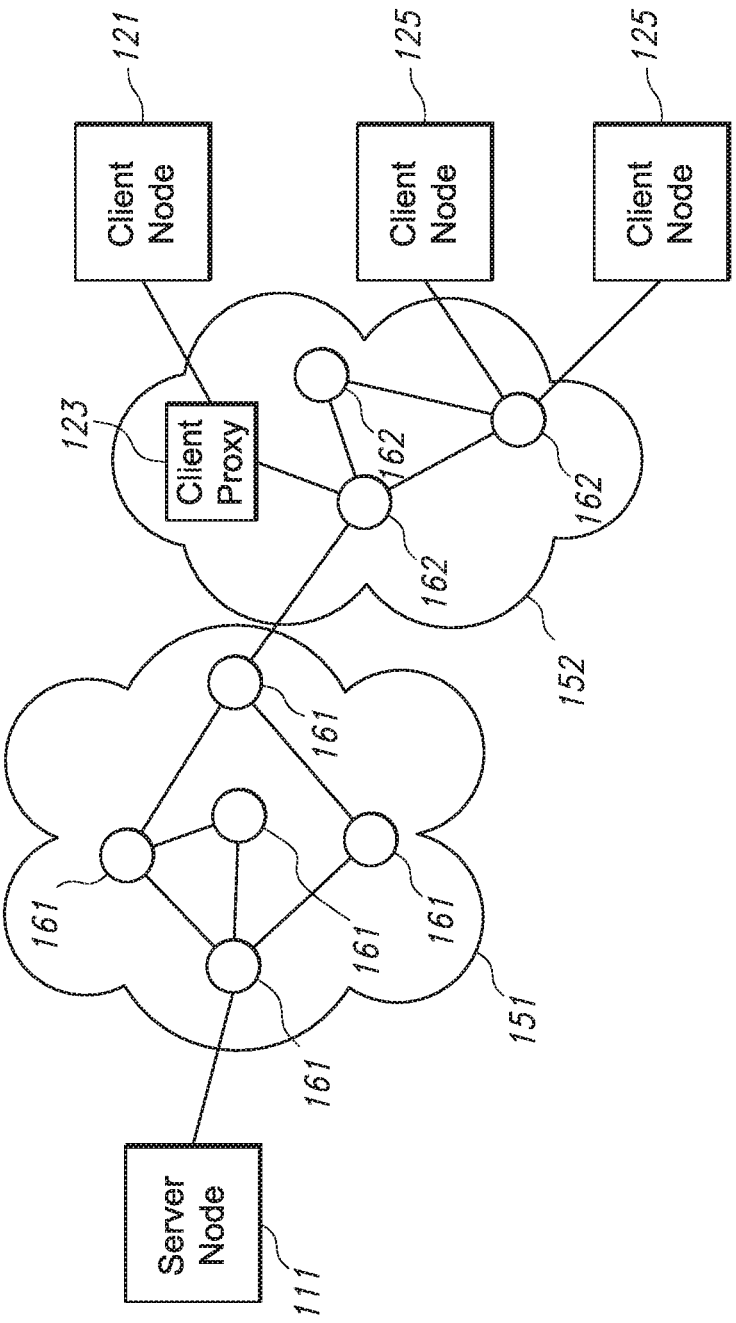
Client Node
121
Client Node
125
Client Node
125
Client Proxy
123
162
162
162
152
161
161
161
161
151
161
Server Node
111

FIG. 183

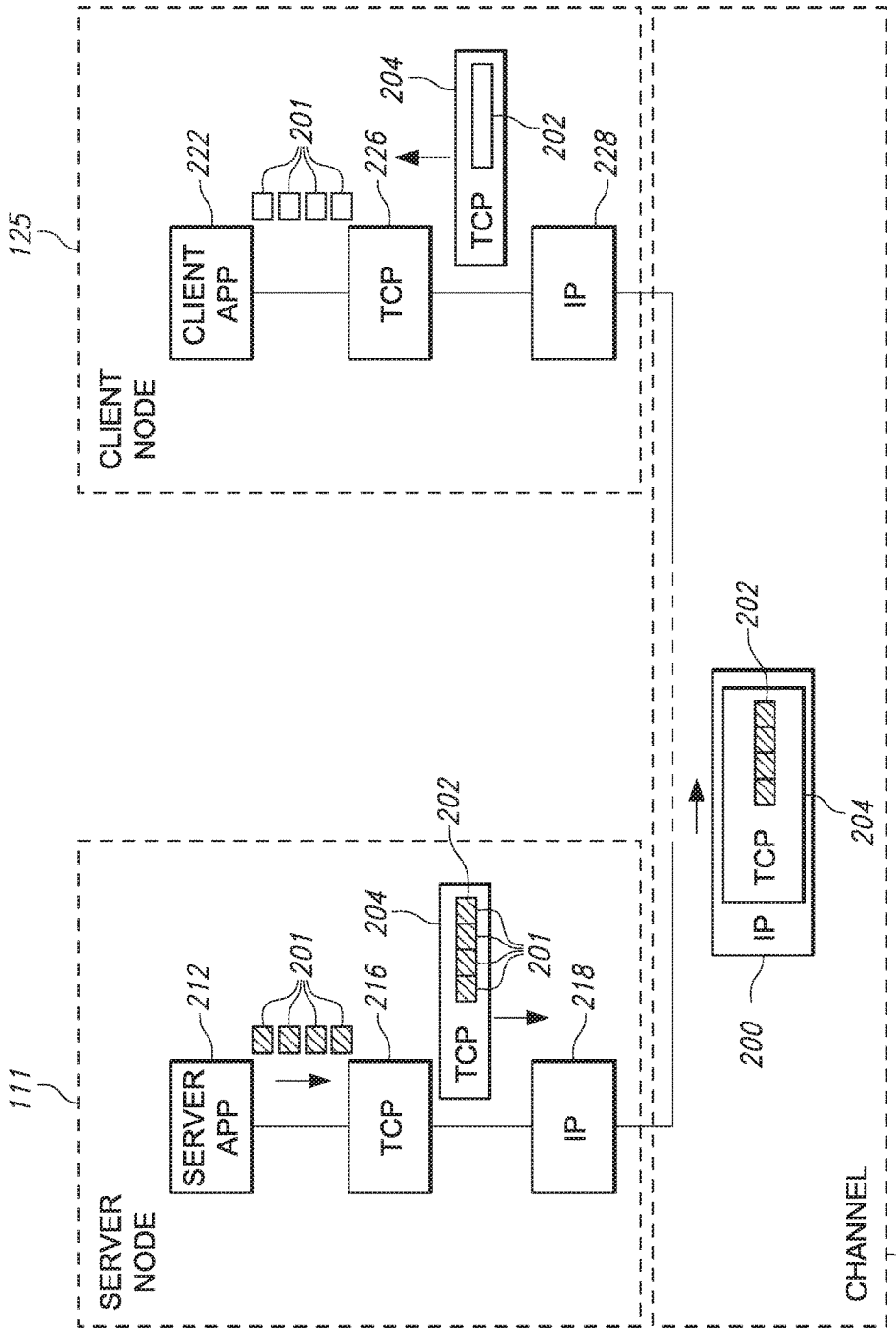
125
CLIENT NODE
CLIENT APP
222
201
TCP
226
204
TCP
202
IP
228
111
SERVER NODE
SERVER APP
212
201
TCP
216
204
202
TCP
201
IP
218
202
IP
TCP
204
200
CHANNEL
230

FIG. 184

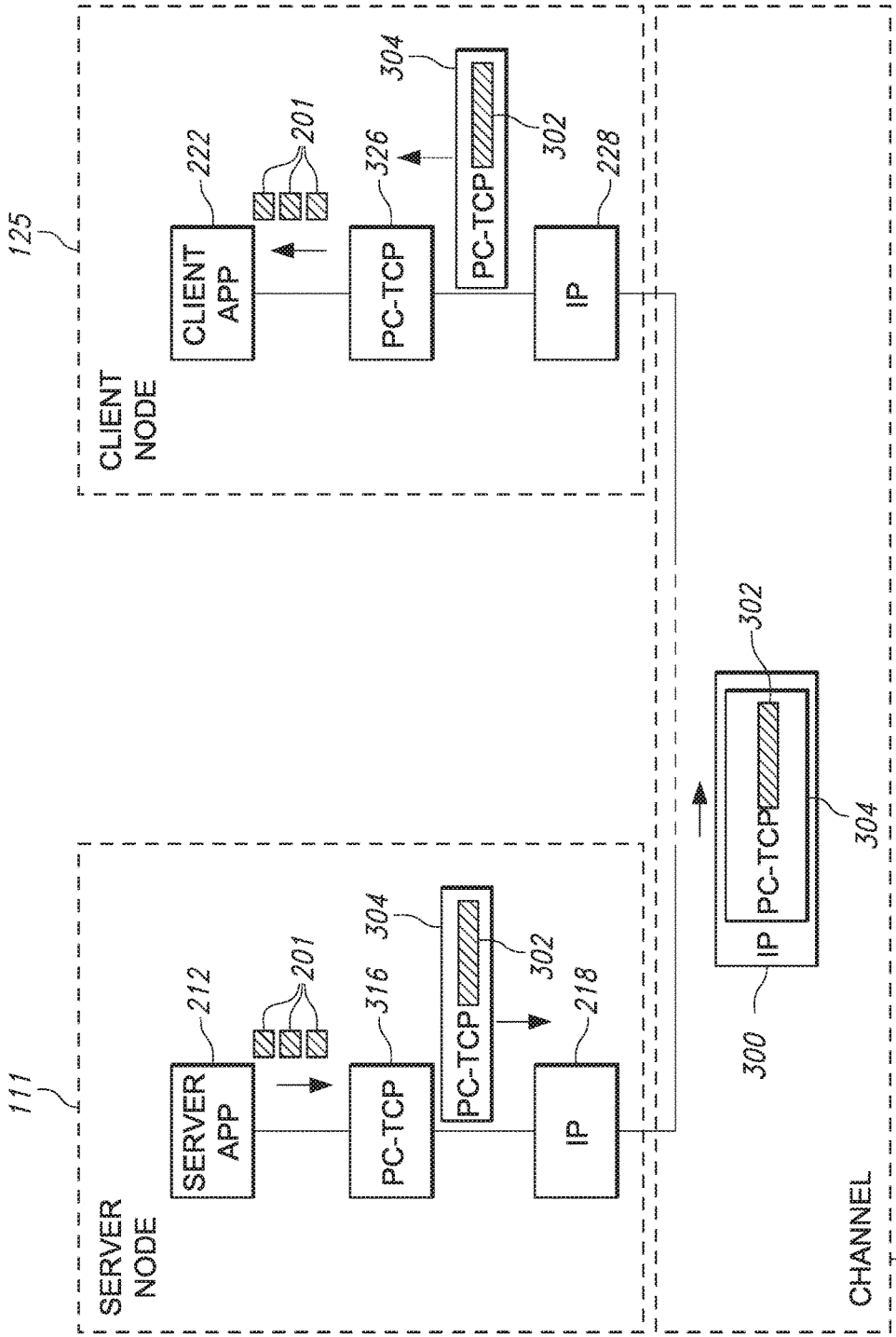
125
CLIENT NODE
CLIENT APP
222
201
PC-TCP
326
304
PC-TCP
302
IP
228
111
SERVER NODE
SERVER APP
212
201
PC-TCP
316
304
PC-TCP
302
IP
218
300
IP
PC-TCP
302
304
CHANNEL
230

FIG. 185

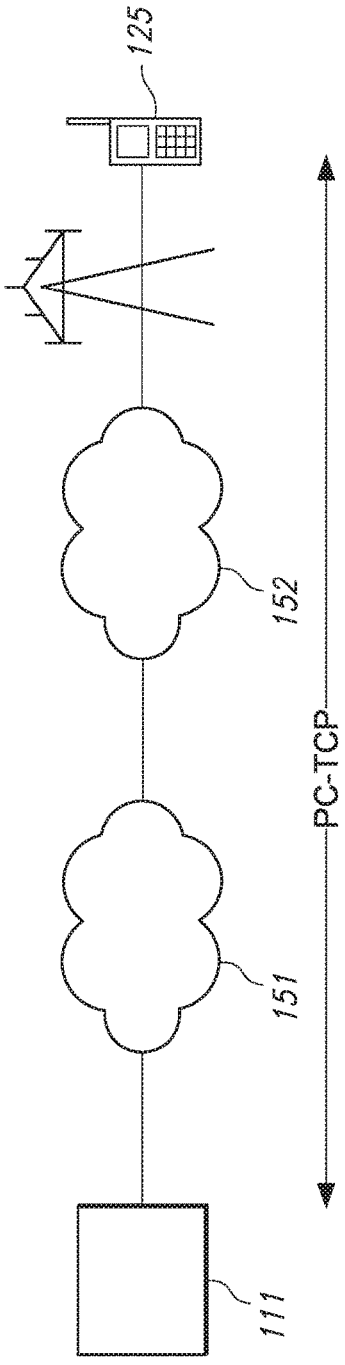


FIG. 186

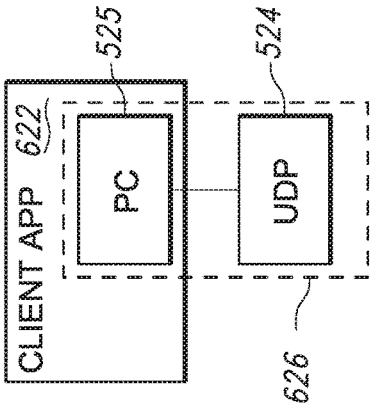


FIG. 188

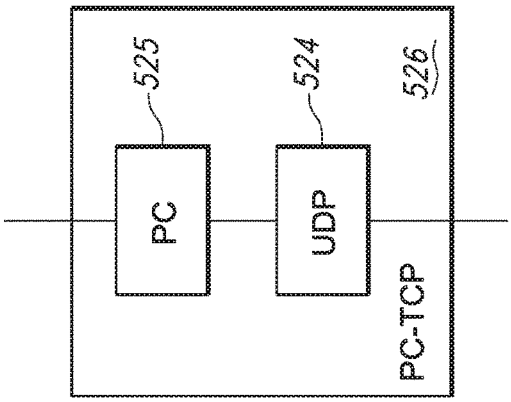


FIG. 187

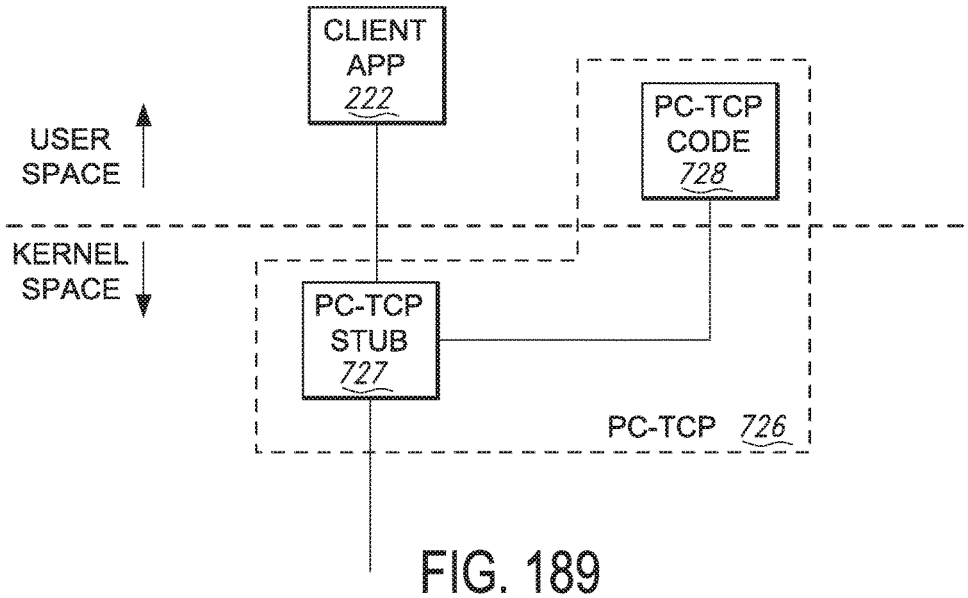


FIG. 189

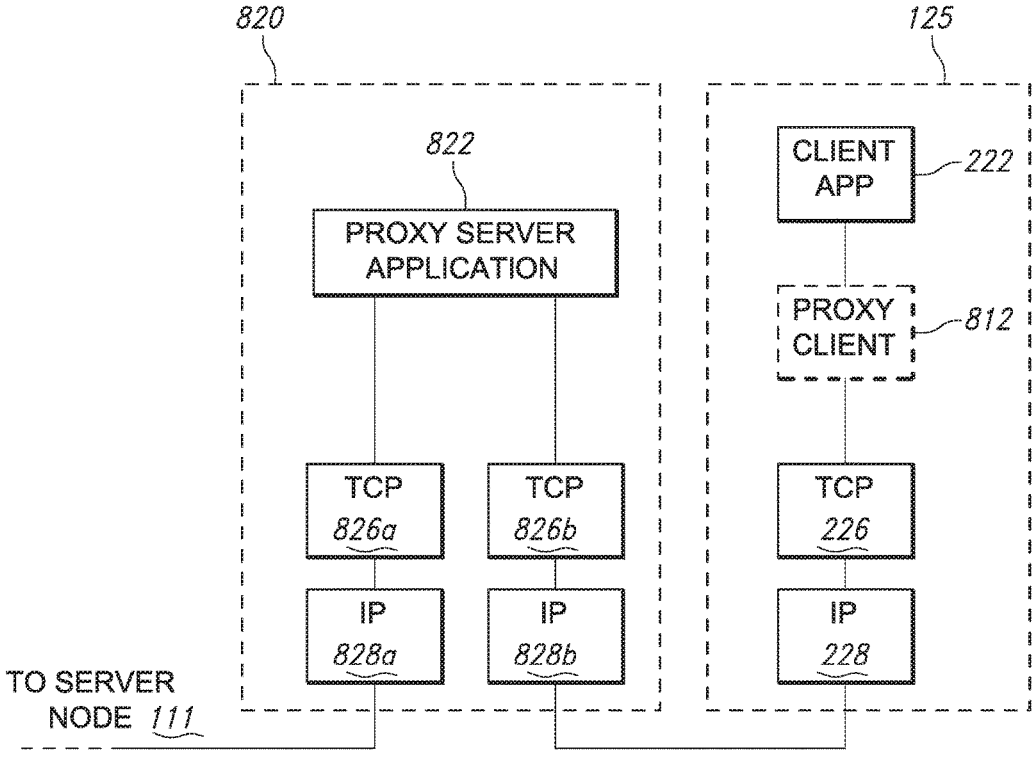


FIG. 190

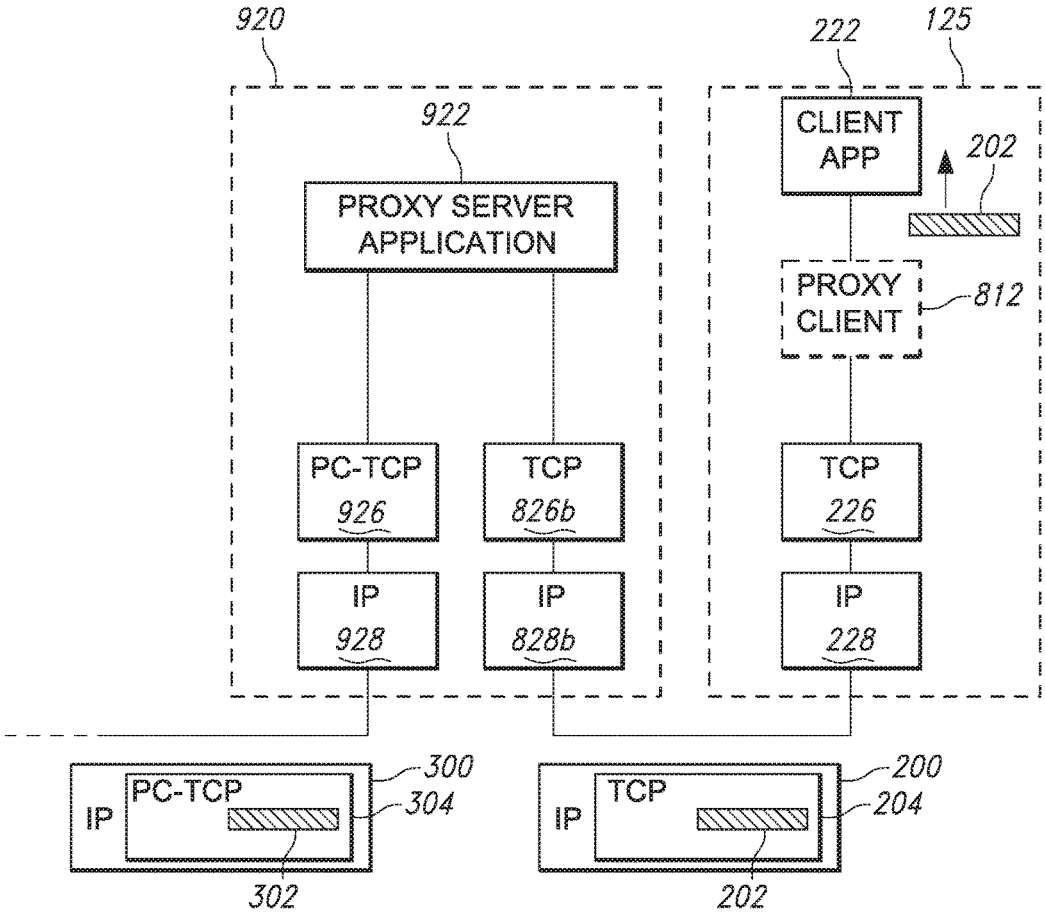


FIG. 191

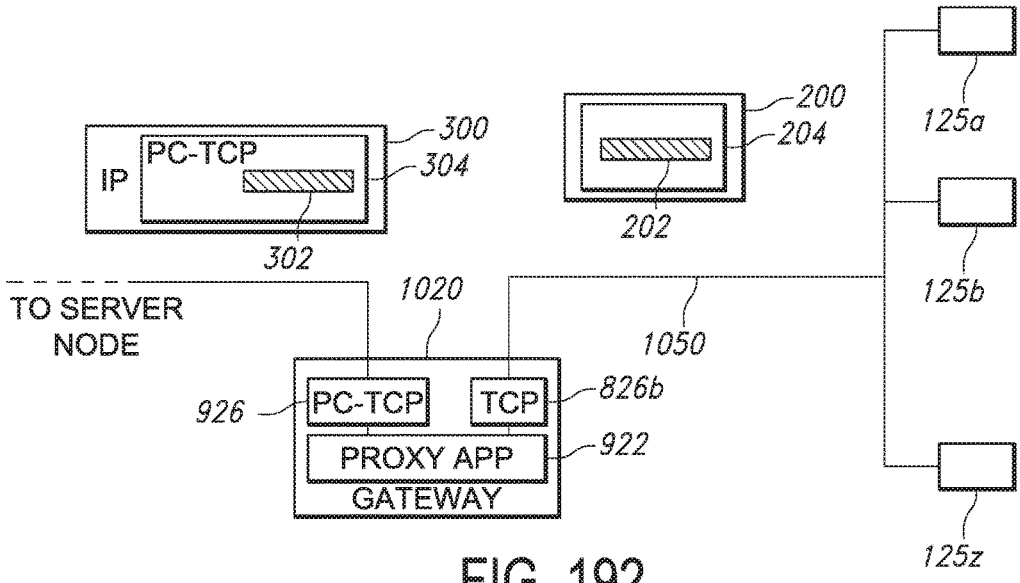


FIG. 192

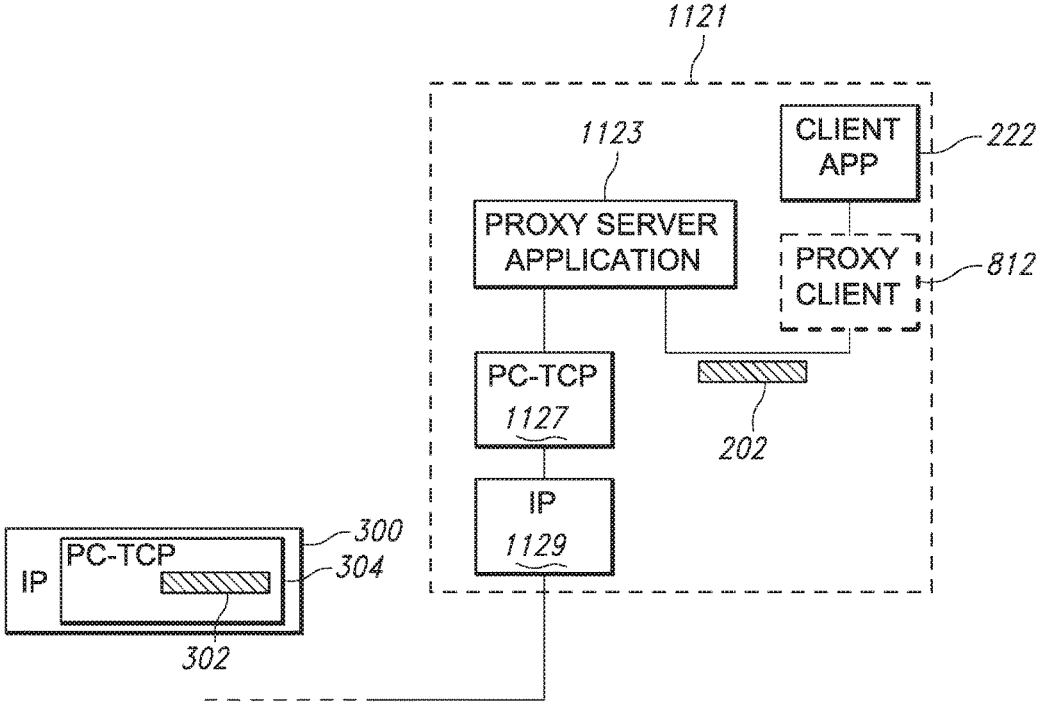


FIG. 193

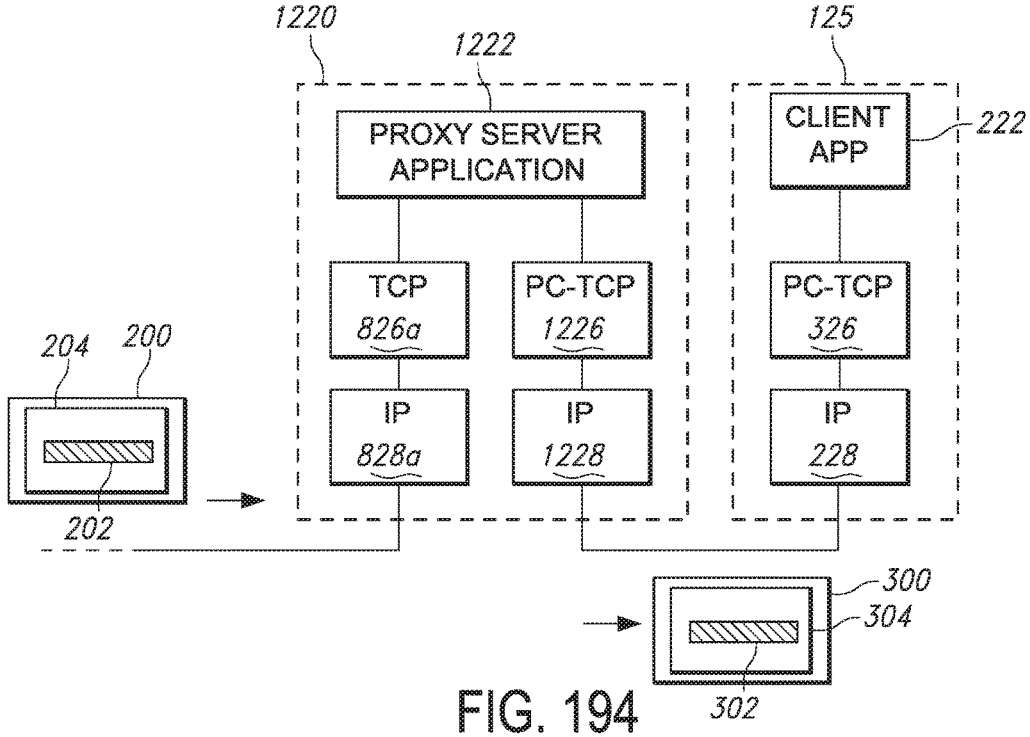


FIG. 194

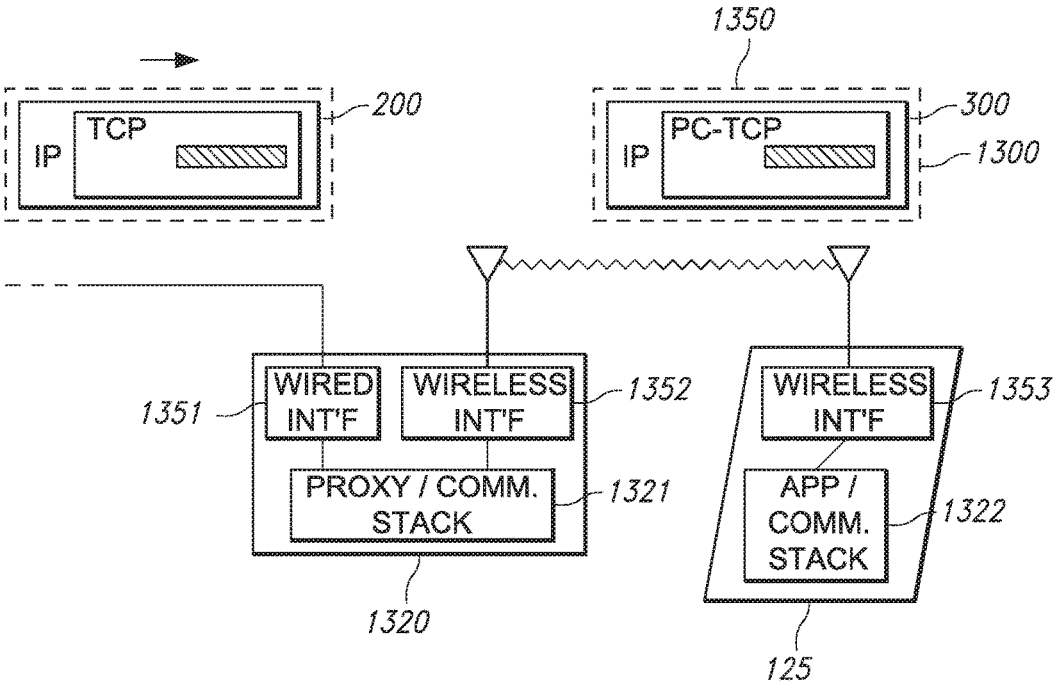


FIG. 195

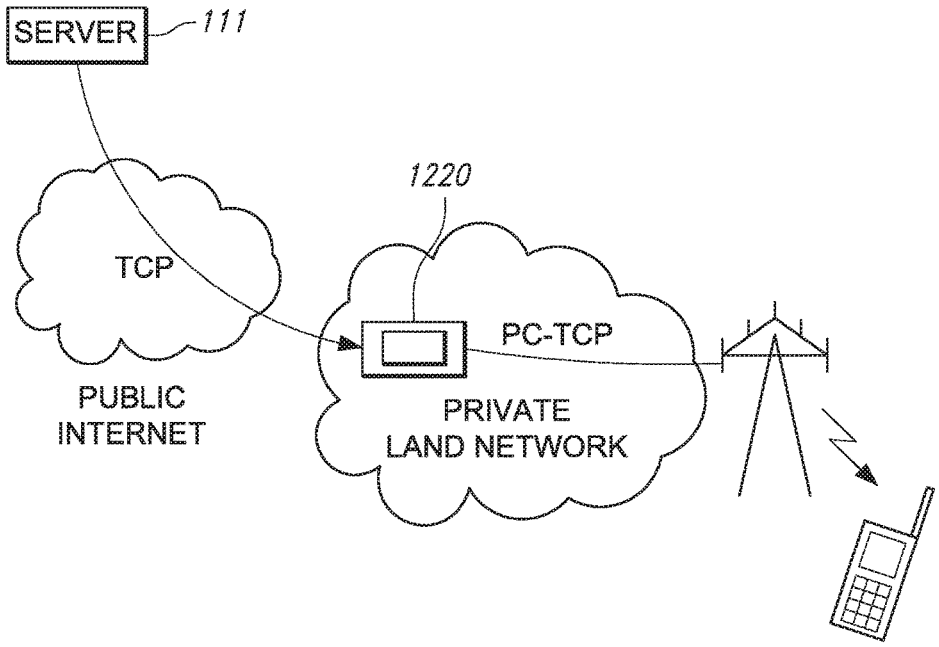


FIG. 196

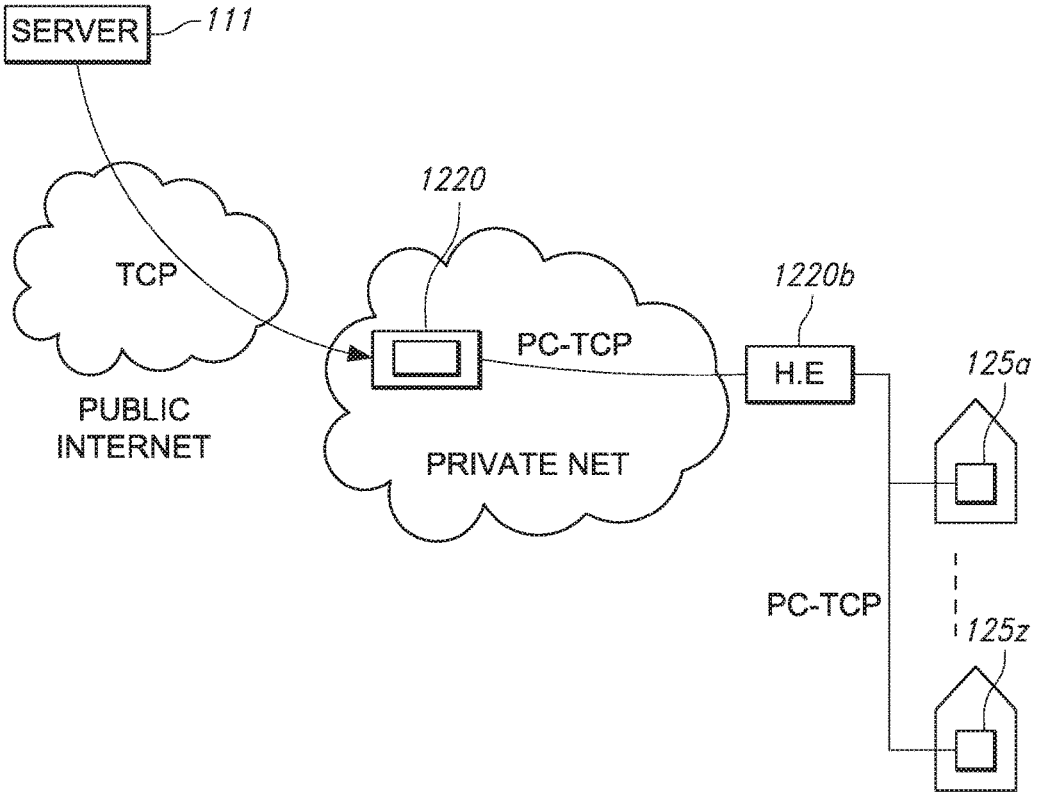


FIG. 197

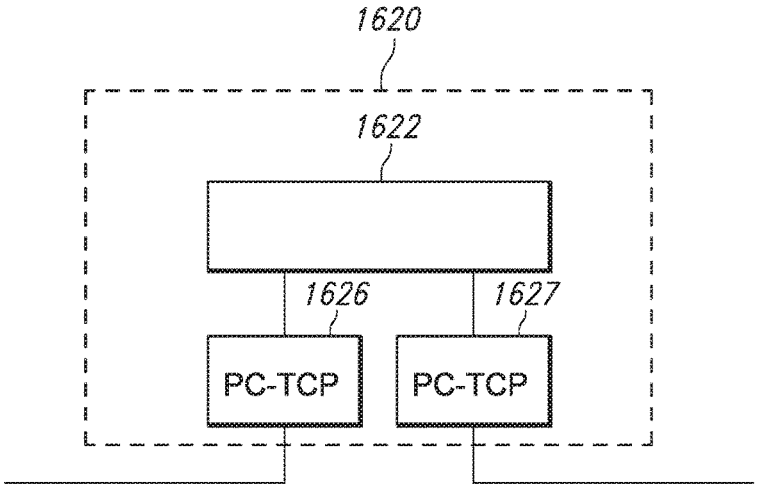


FIG. 198

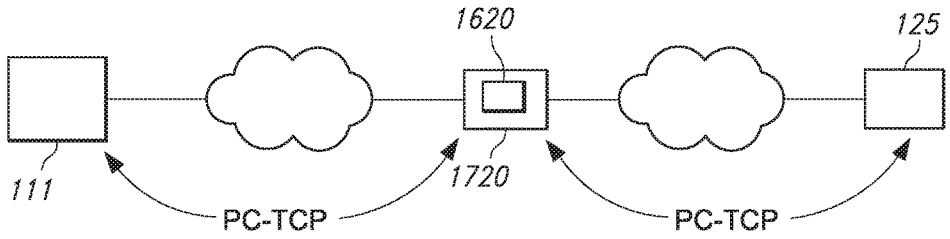


FIG. 199

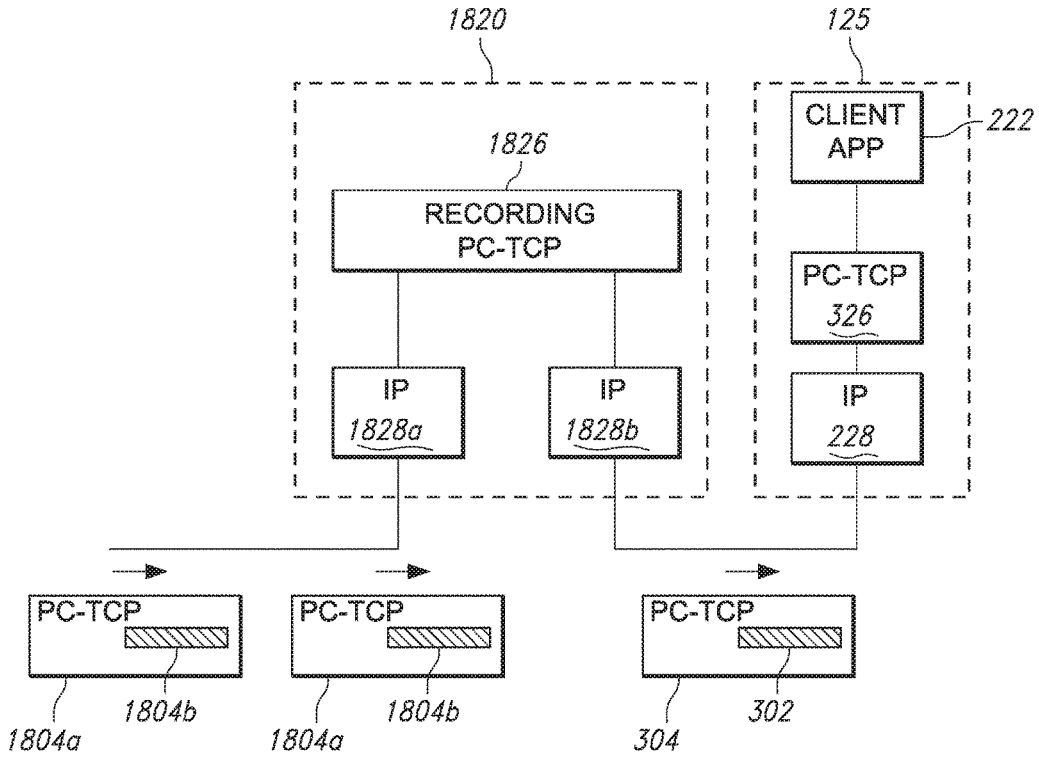


FIG. 200

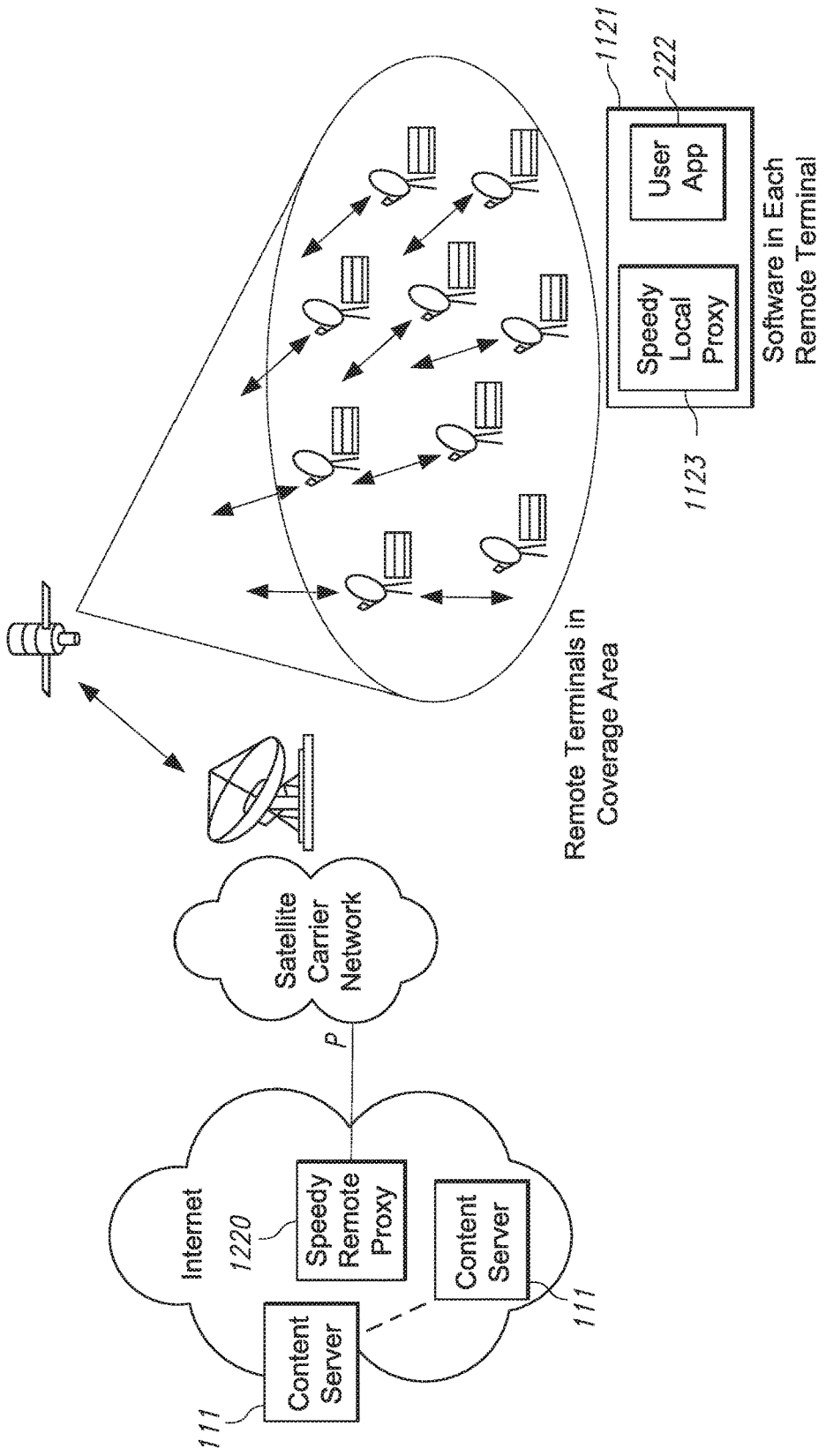
Internet
1220
Speedy Remote Proxy
Content Server
Content Server
111
111
P
Satellite Carrier Network
Remote Terminals in Coverage Area
1121
222
User App
Speedy Local Proxy
Software in Each Remote Terminal
1123

FIG. 201

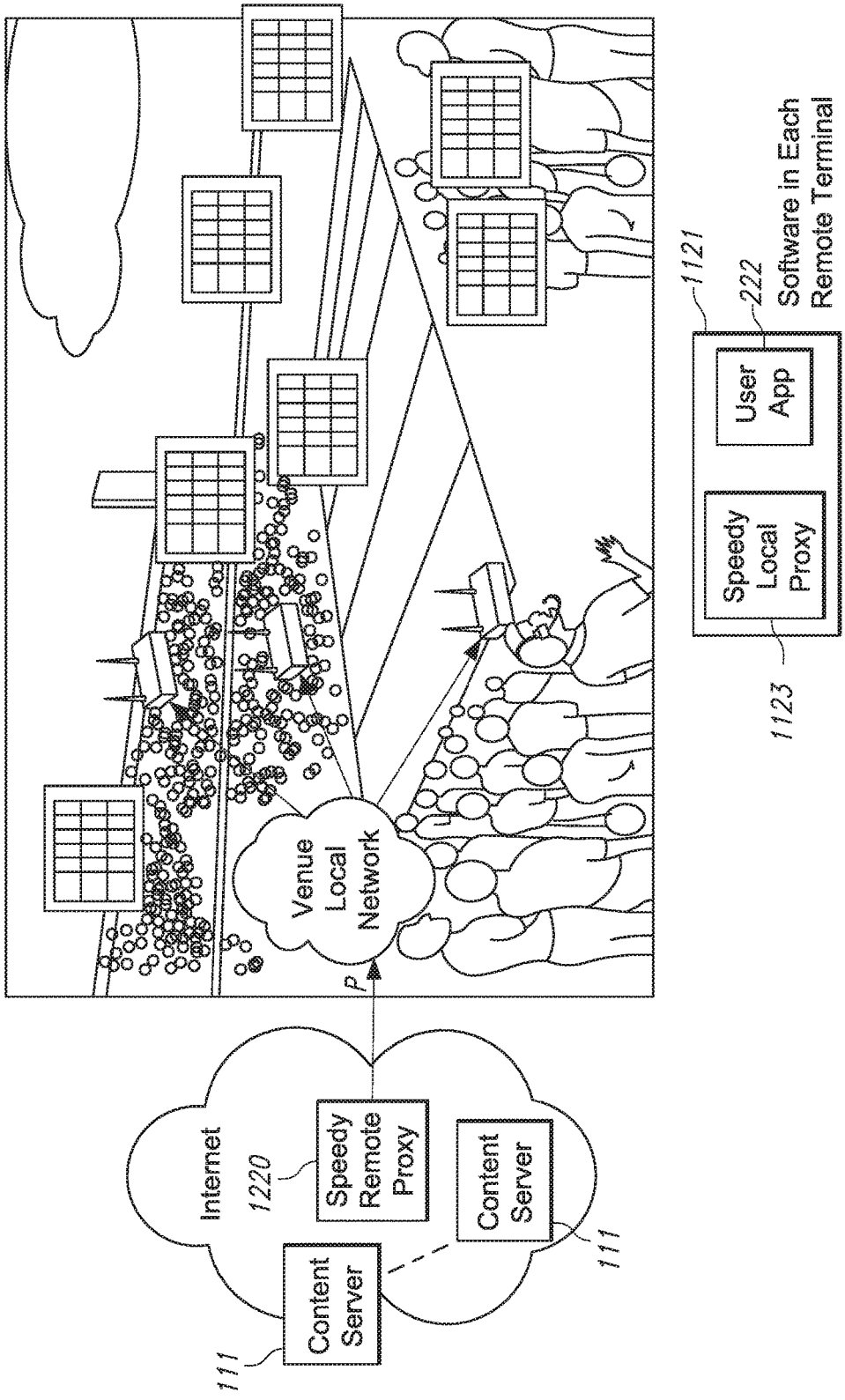
Venue Local Network
P
Internet
1220
Speedy Remote Proxy
Content Server
111
Content Server
111
1121
222
Software in Each Remote Terminal
User App
Speedy Local Proxy
1123

FIG. 202

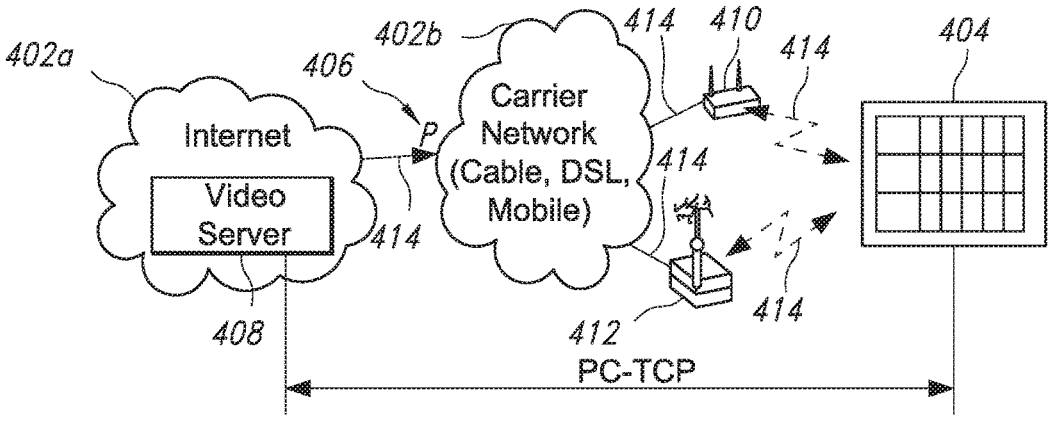


FIG. 203

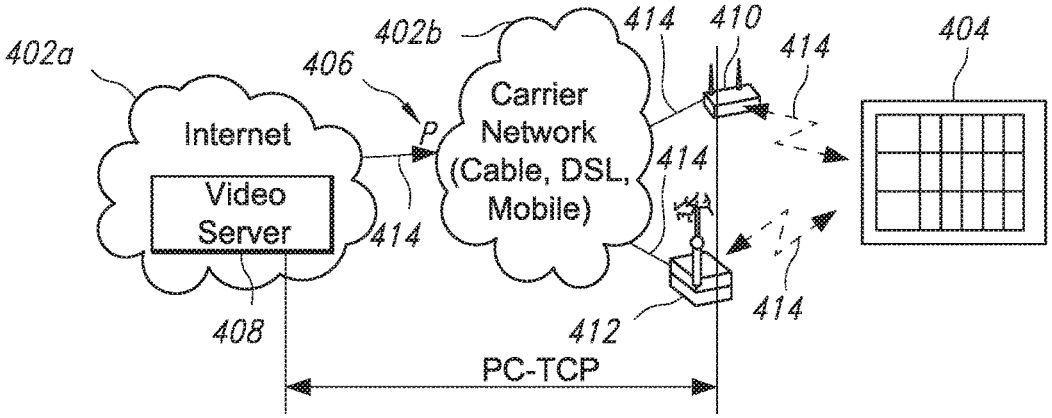


FIG. 204

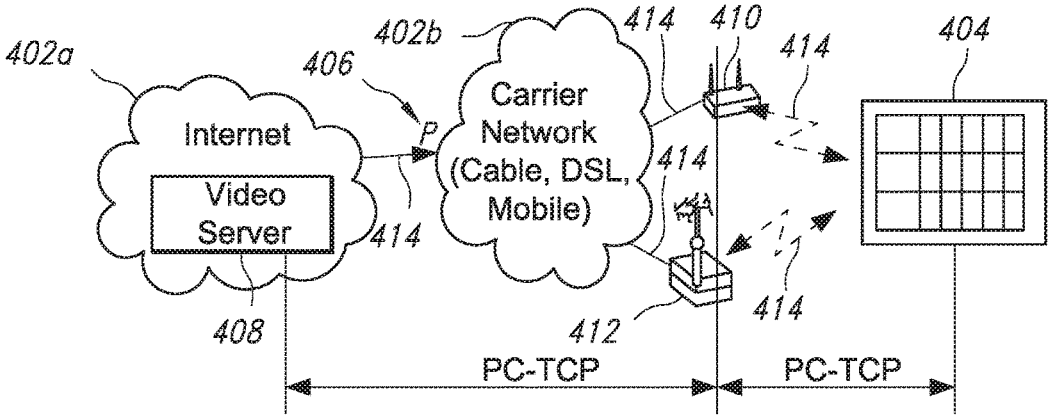


FIG. 205

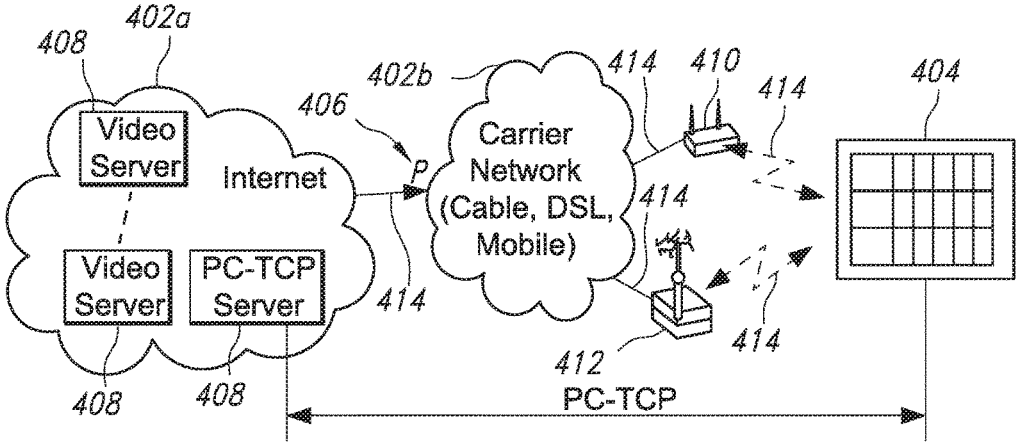


FIG. 206

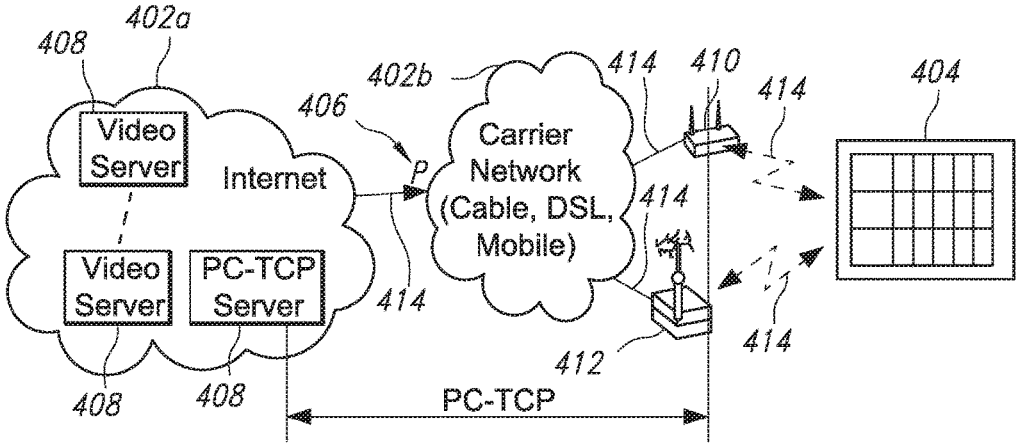


FIG. 207

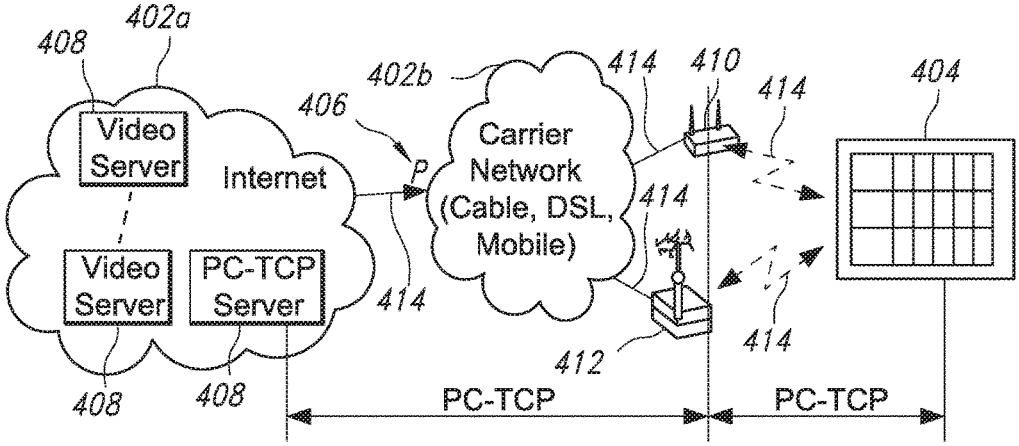


FIG. 208

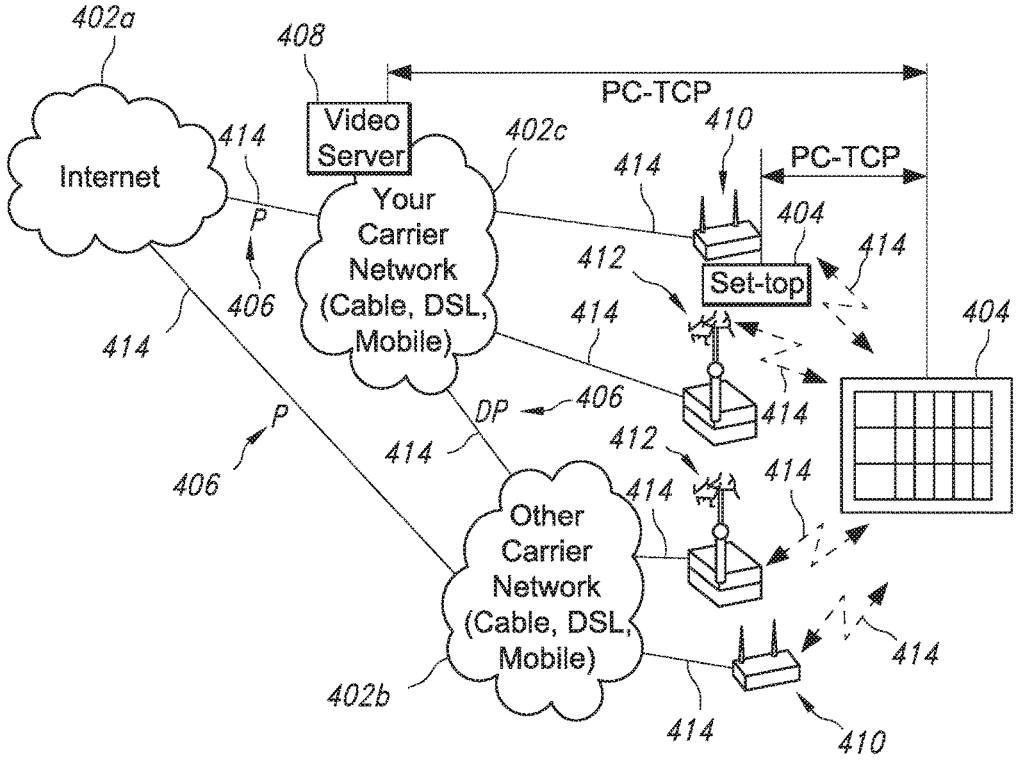


FIG. 209

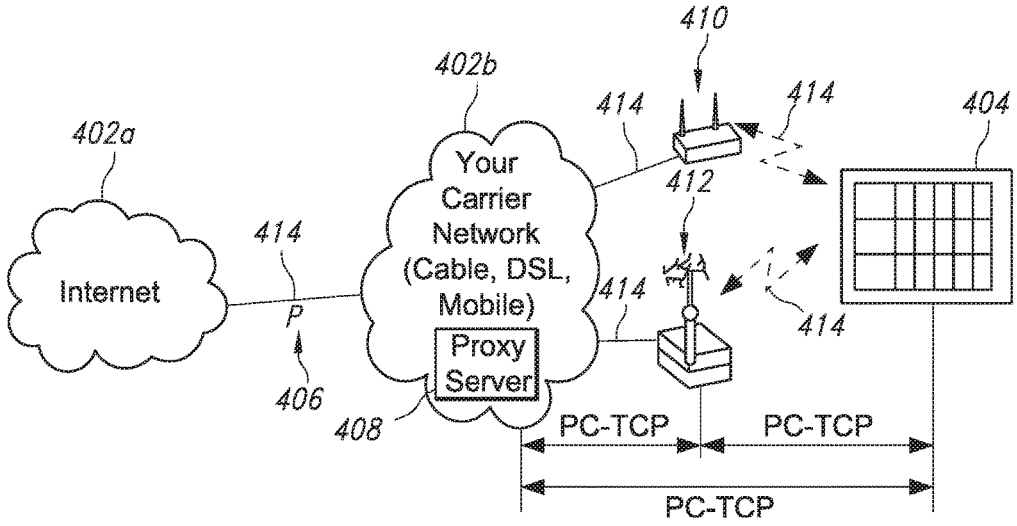


FIG. 210

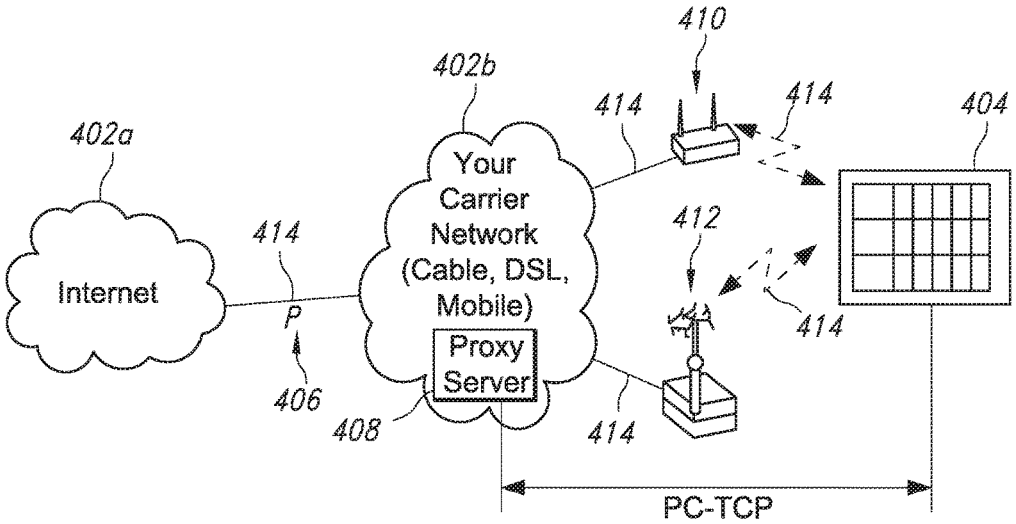


FIG. 211

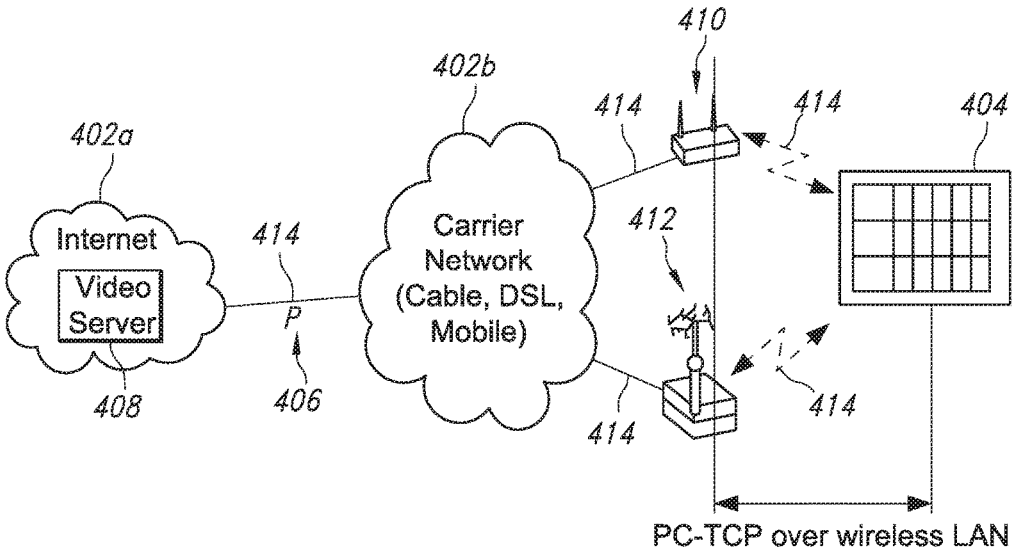


FIG. 212

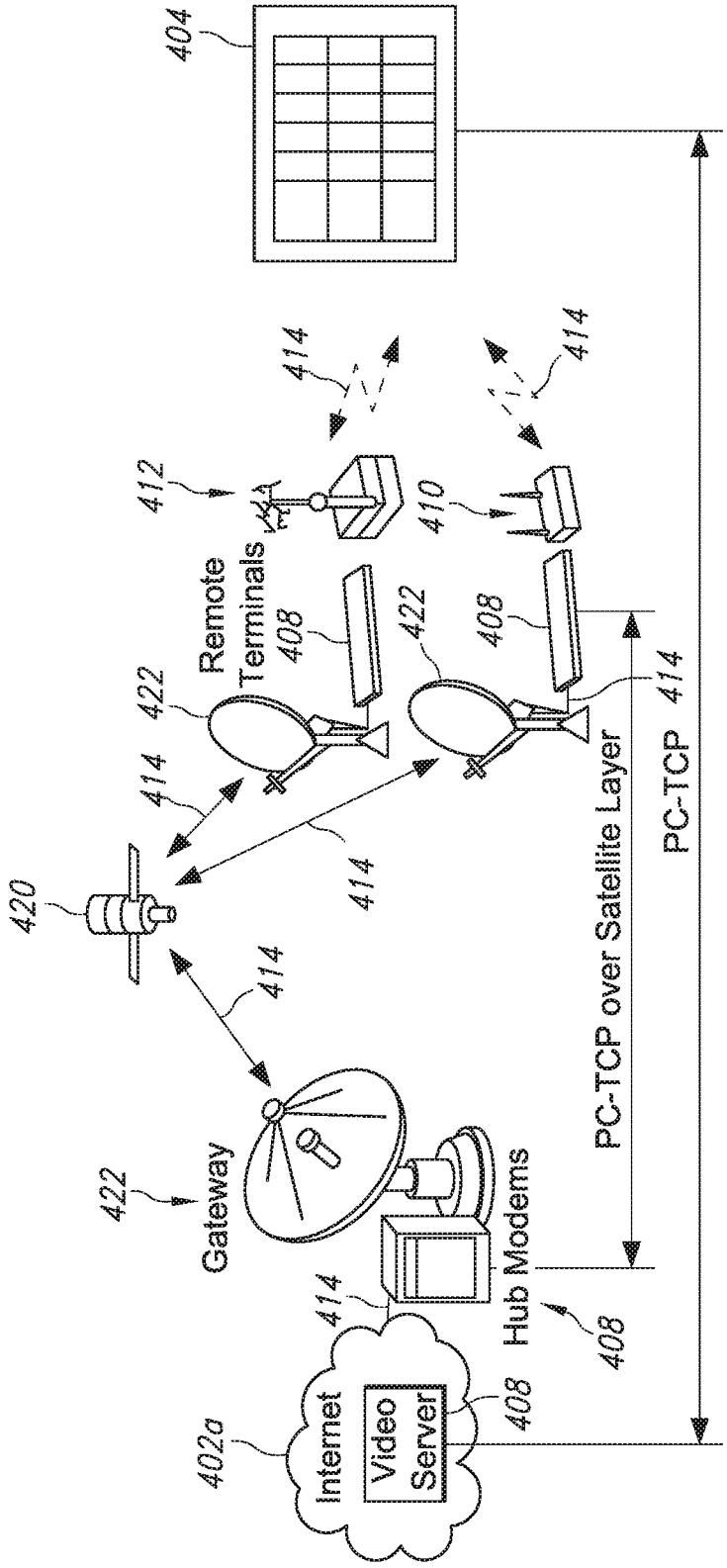
404
414
414
412
410
Remote Terminals
408
422
408
422
414
414
420
414
422
Gateway
414
408
Hub Modems
PC-TCP over Satellite Layer
PC-TCP
414
408
402a
Internet
Video Server

FIG. 213

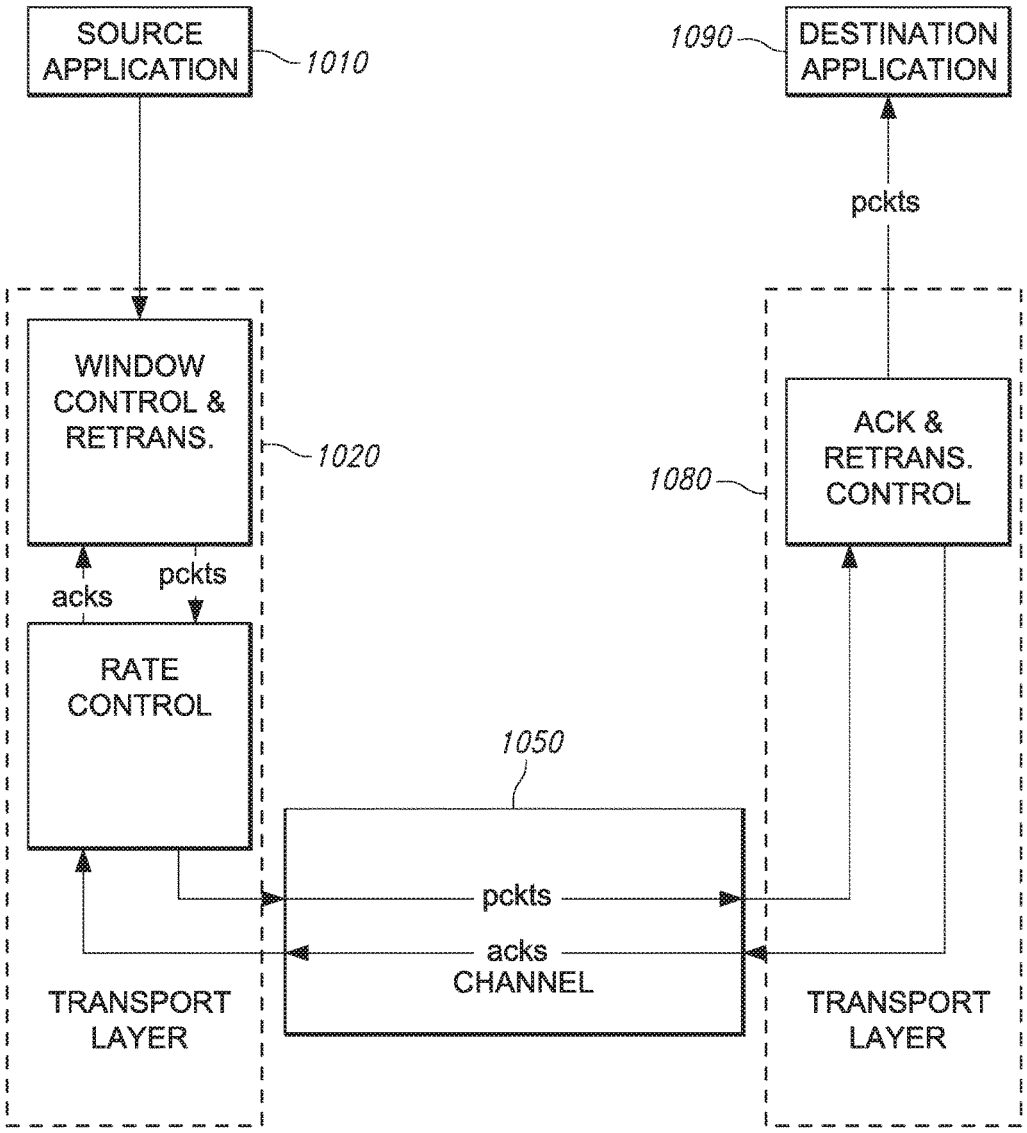
SOURCE APPLICATION
1010
1090
DESTINATION APPLICATION
pckts
WINDOW CONTROL & RETRANS.
1020
ACK & RETRANS. CONTROL
1080
acks
pckts
RATE CONTROL
1050
pckts
acks
CHANNEL
TRANSPORT LAYER
TRANSPORT LAYER

FIG. 214

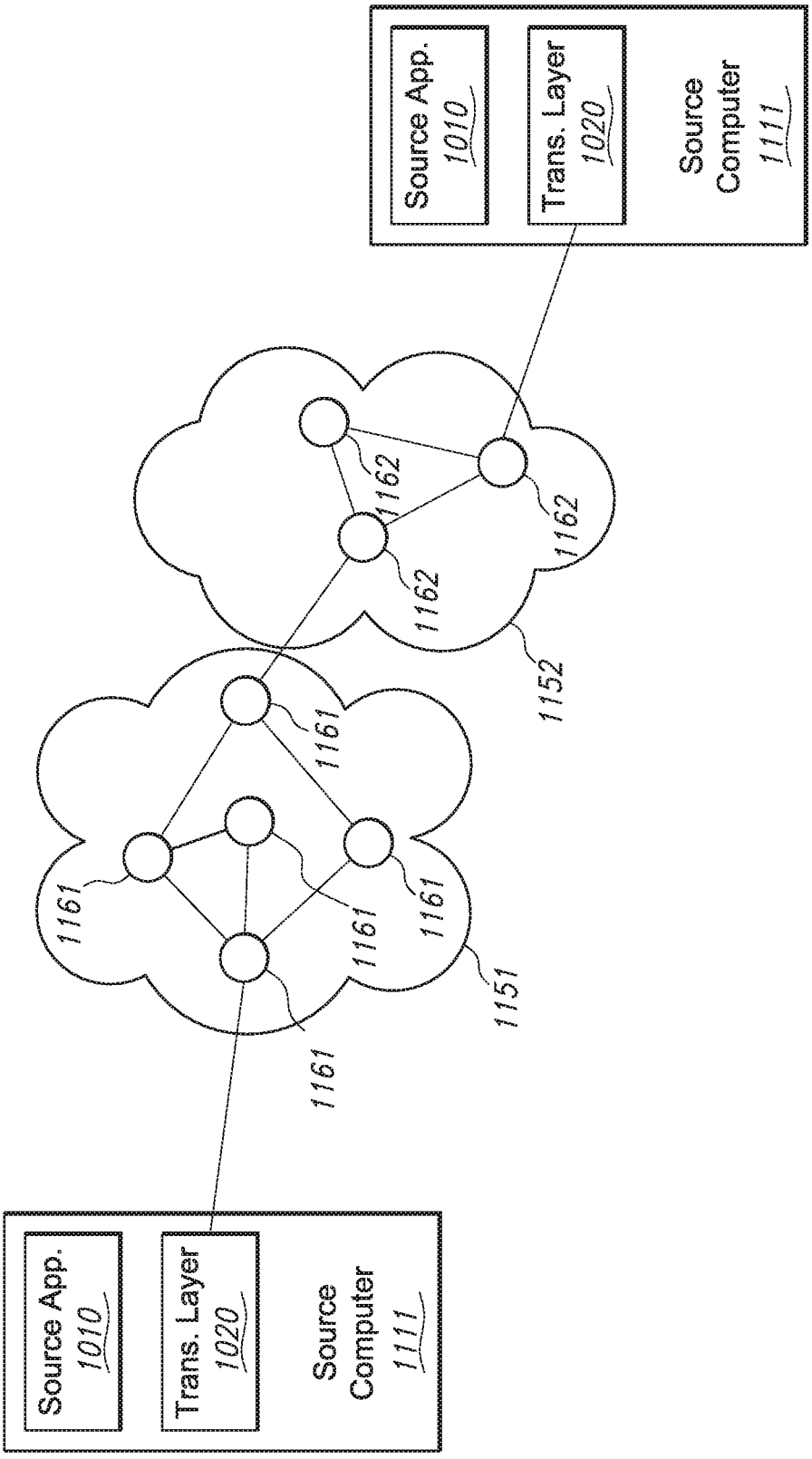
Source App.
1010
Trans. Layer
1020
Source Computer
1111
Source App.
1010
Trans. Layer
1020
Source Computer
1111
1161
1161
1161
1161
1161
1151
1152
1162
1162
1162

FIG. 215

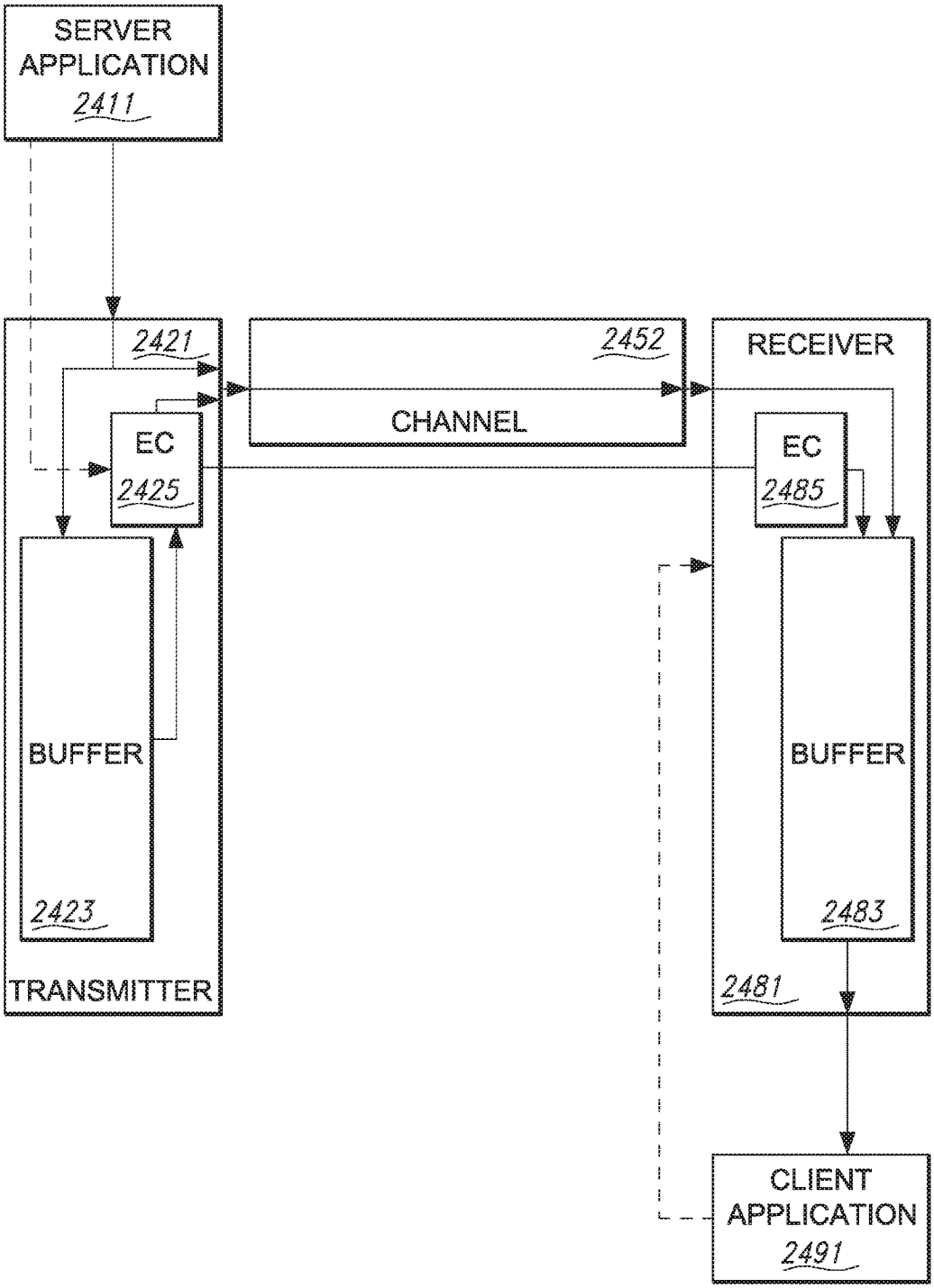
SERVER APPLICATION
2411
2421
2452
RECEIVER
CHANNEL
EC
2425
EC
2485
BUFFER
2423
BUFFER
2483
TRANSMITTER
2481
CLIENT APPLICATION
2491

FIG. 216

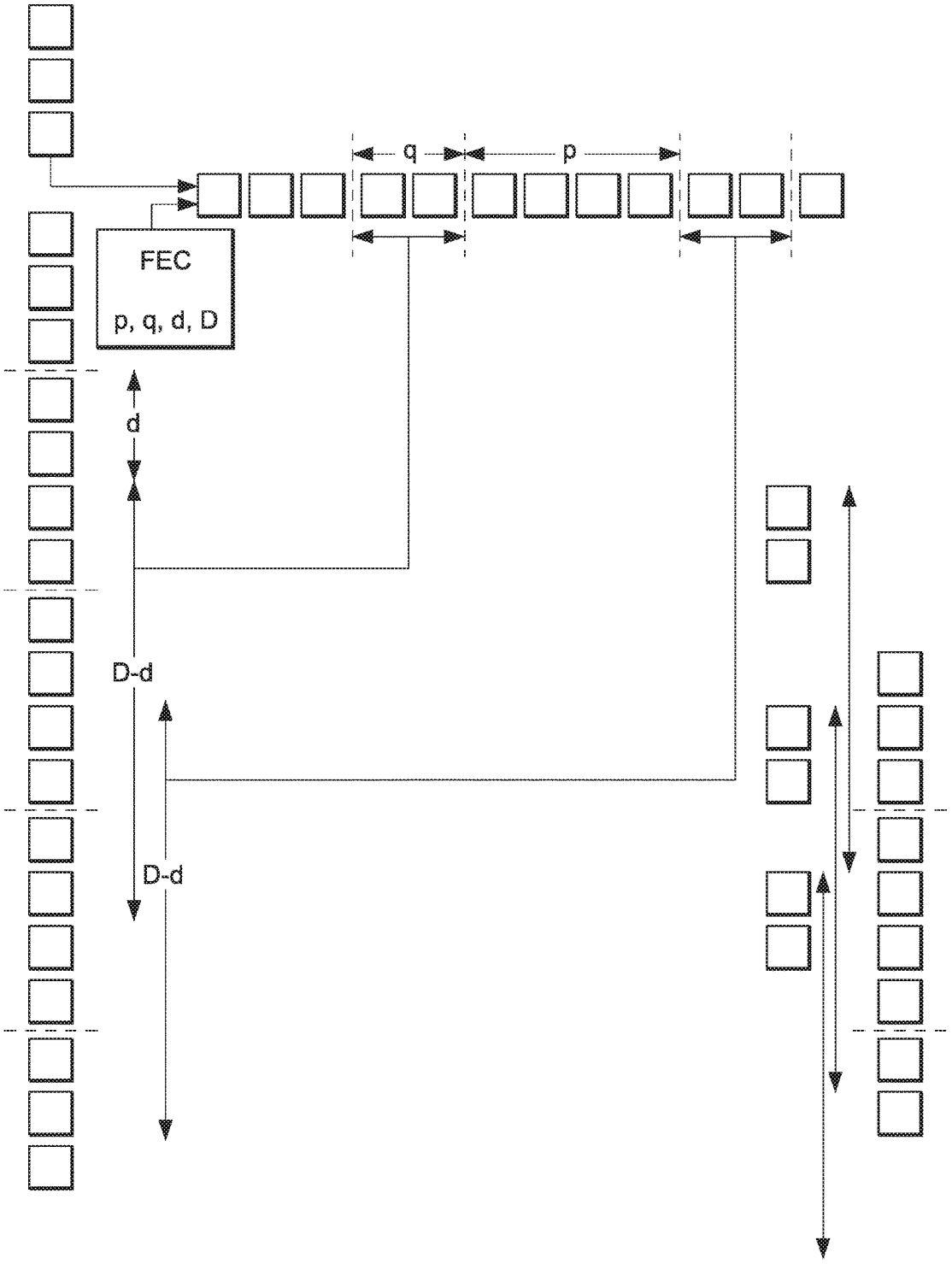


FIG. 217

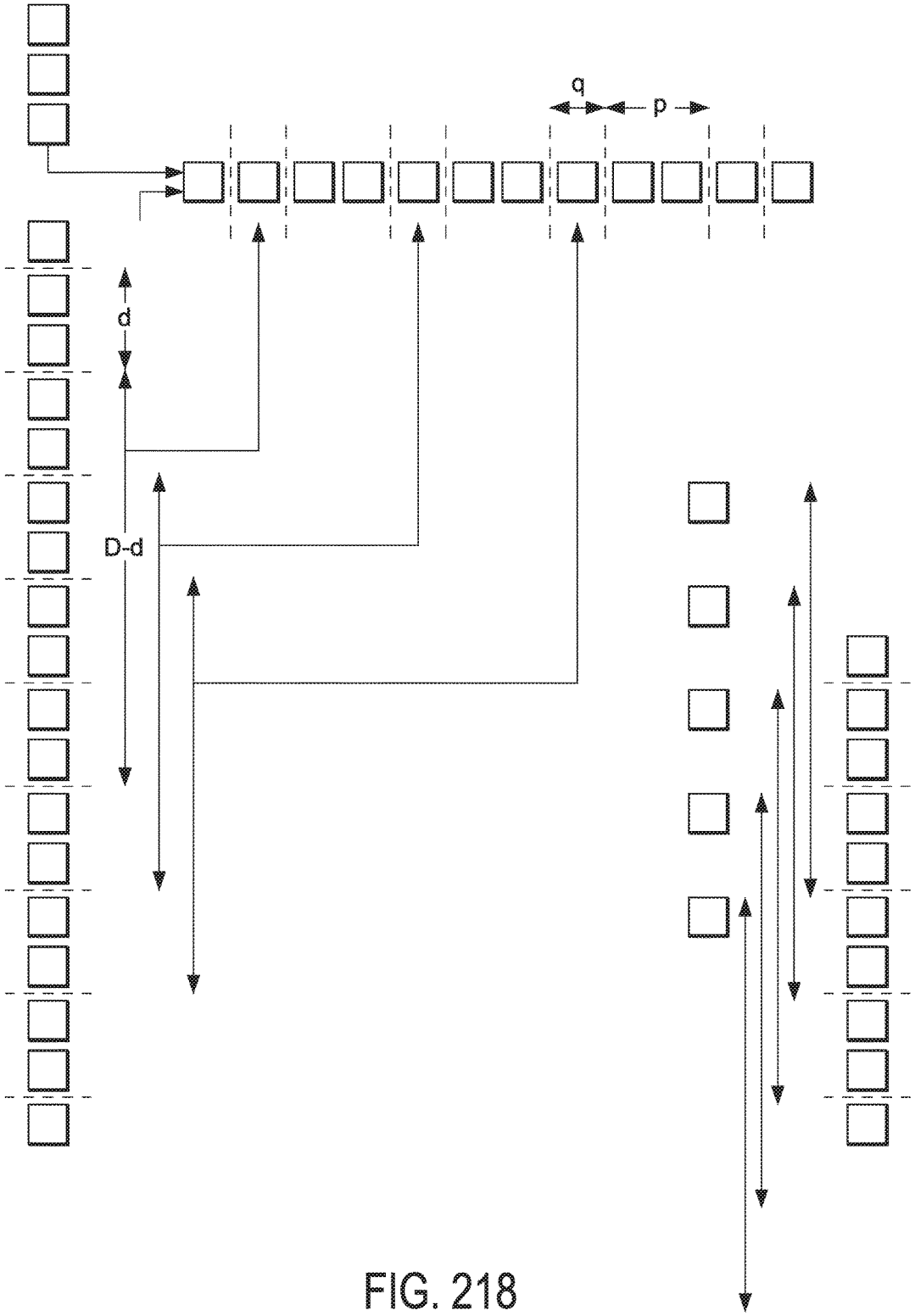


FIG. 218

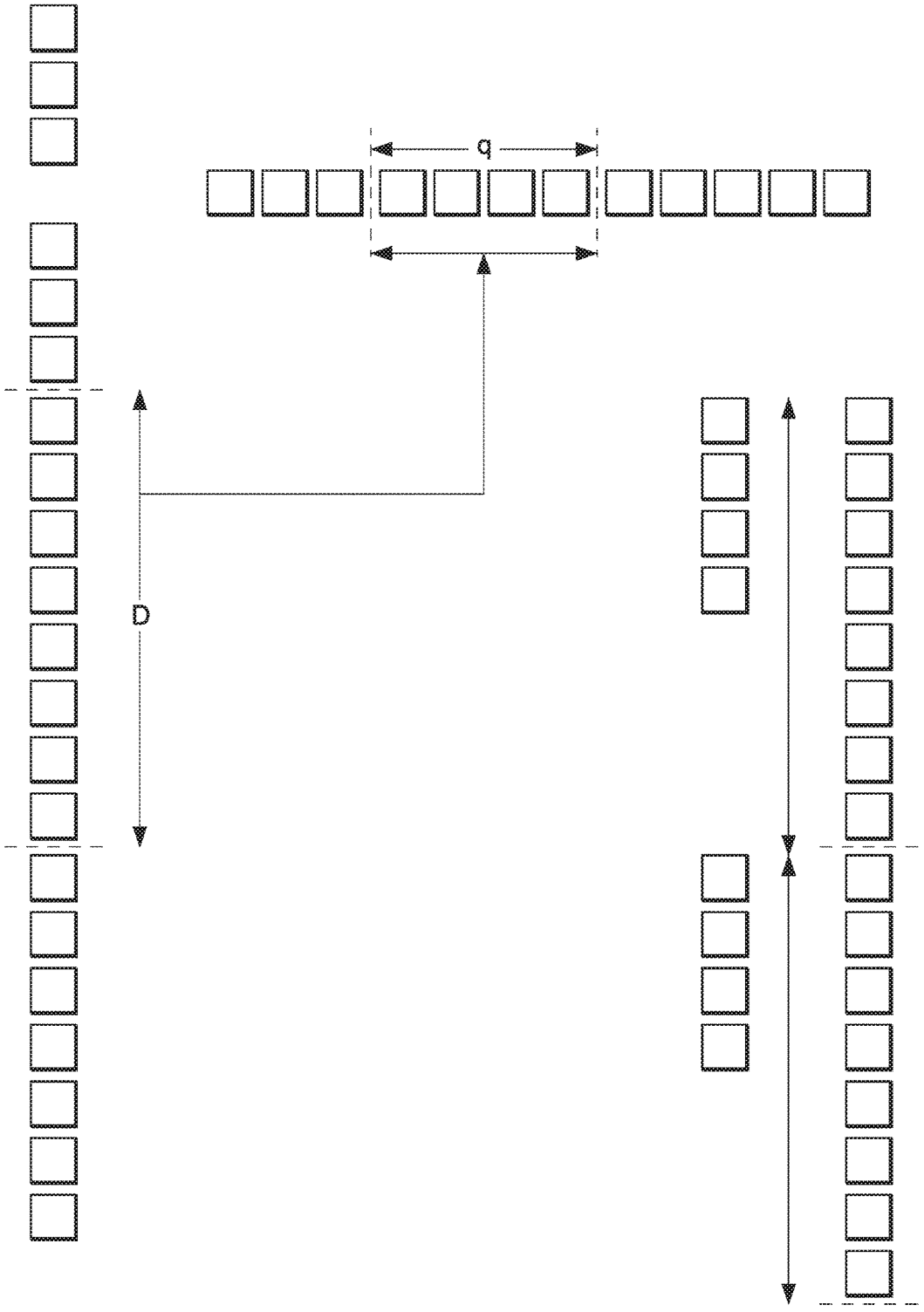


FIG. 219

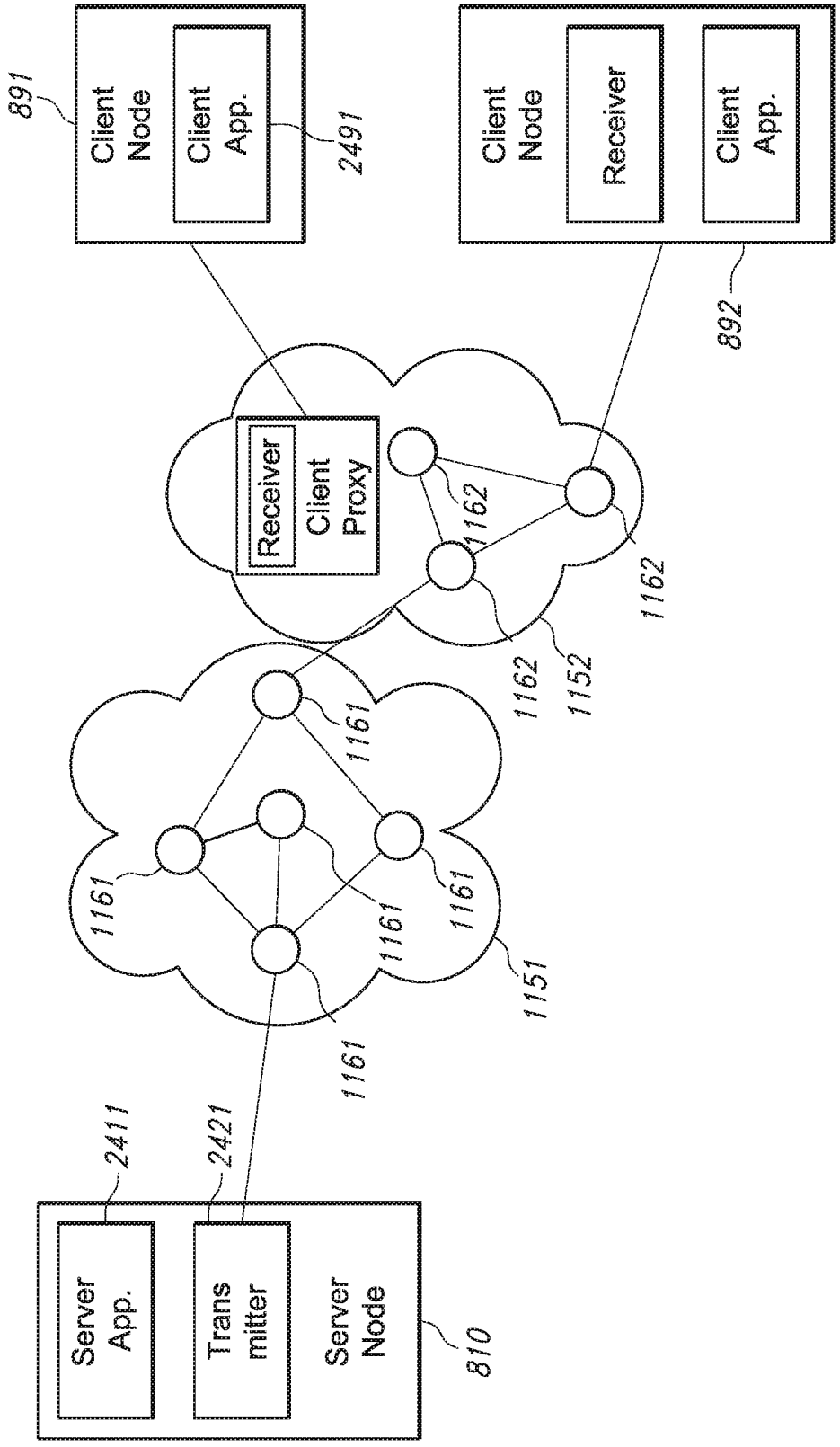
891
Client Node
Client App.
2491
Client Node
Receiver
Client App.
892
Receiver
Client Proxy
1162
1162
1162
1152
1161
1161
1161
1161
1161
1151
2411
2421
Server App.
Trans mitter
Server Node
810

FIG. 220

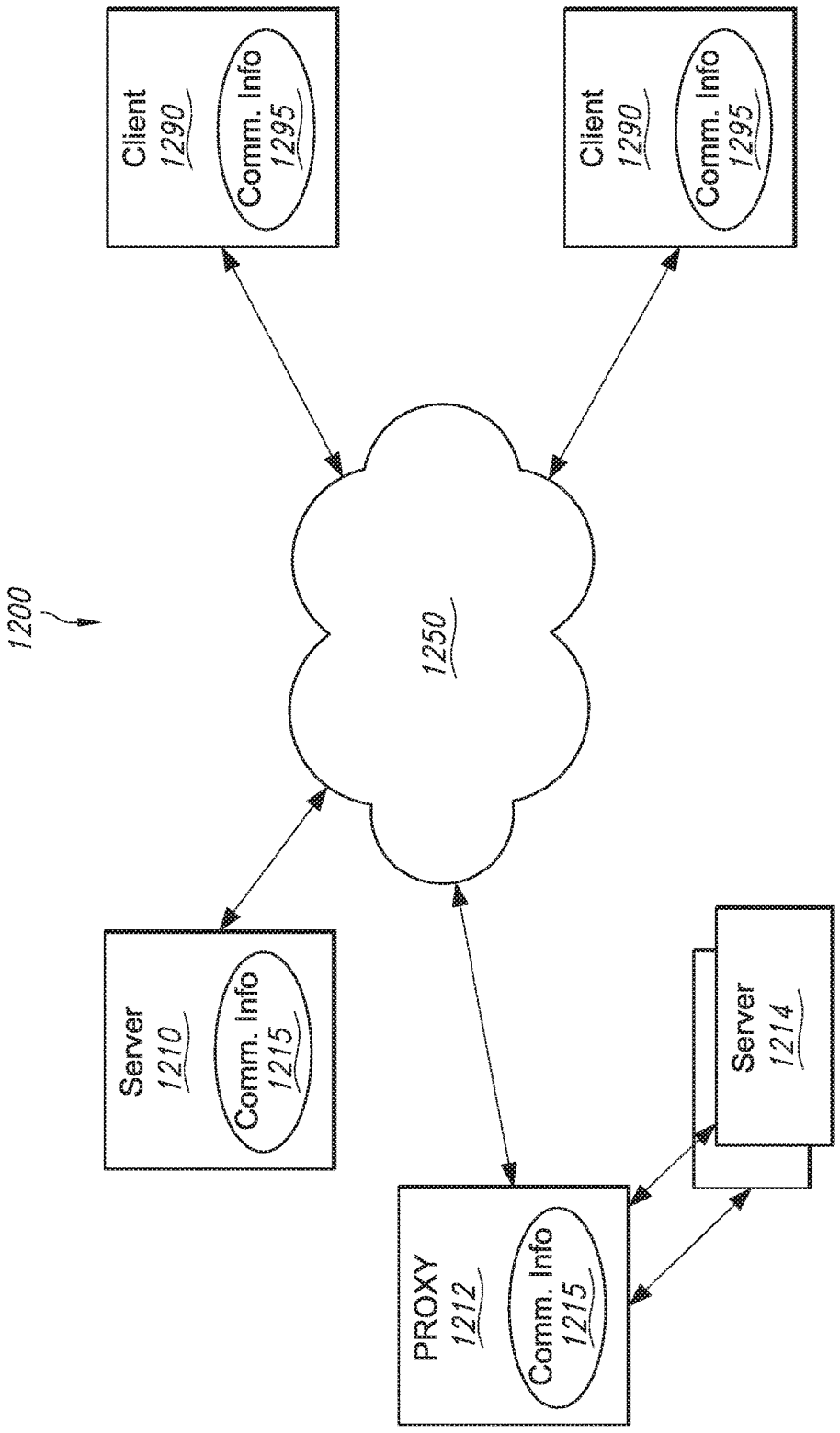
1200
Client
1290
Comm. Info
1295
Client
1290
Comm. Info
1295
1250
Server
1210
Comm. Info
1215
Server
1214
PROXY
1212
Comm. Info
1215

FIG. 221

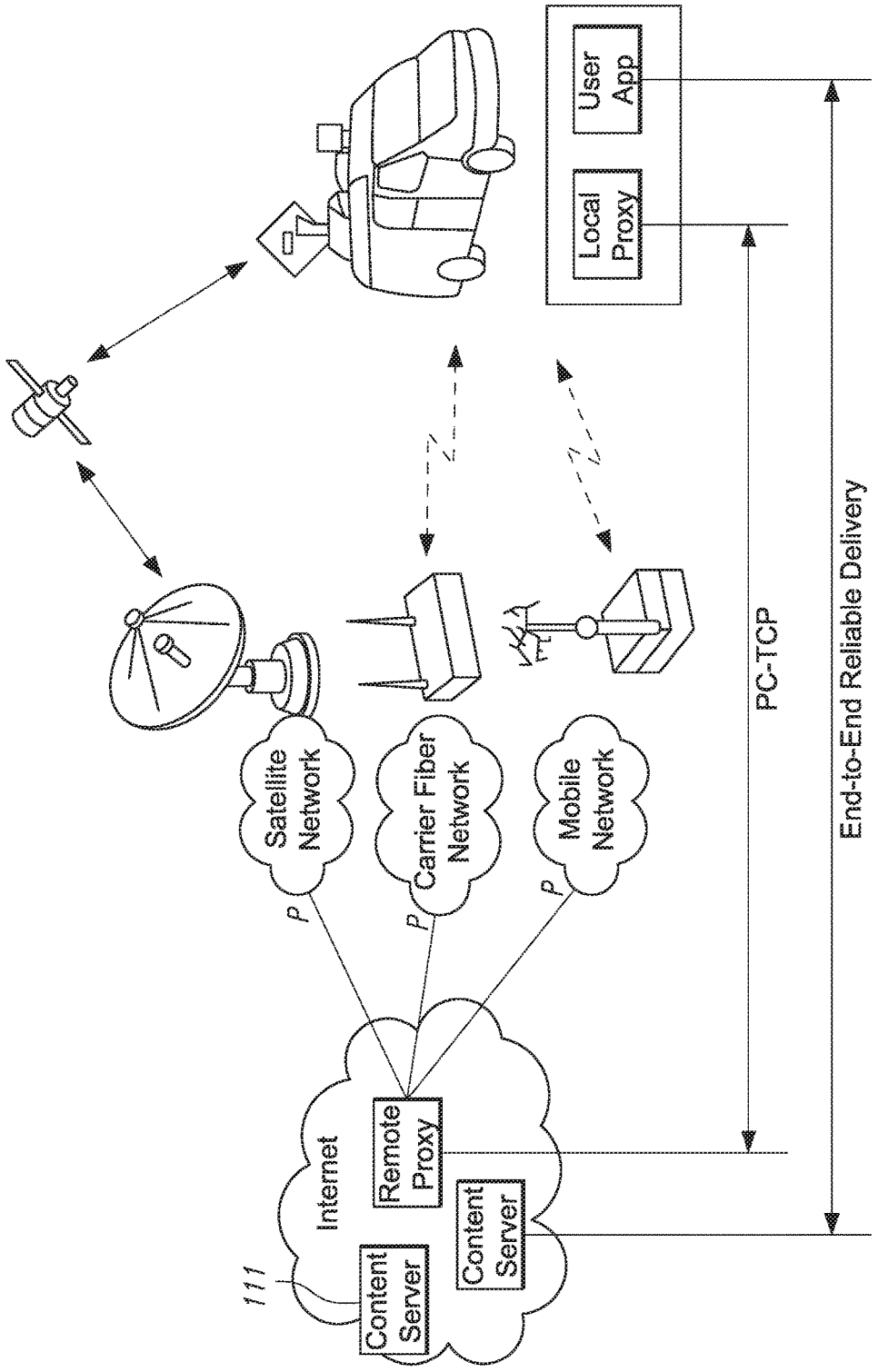
User App
Local Proxy
PC-TCP
End-to-End Reliable Delivery
Satellite Network
Carrier Fiber Network
Mobile Network
P
P
P
Internet
Remote Proxy
Content Server
Content Server
111

FIG. 222

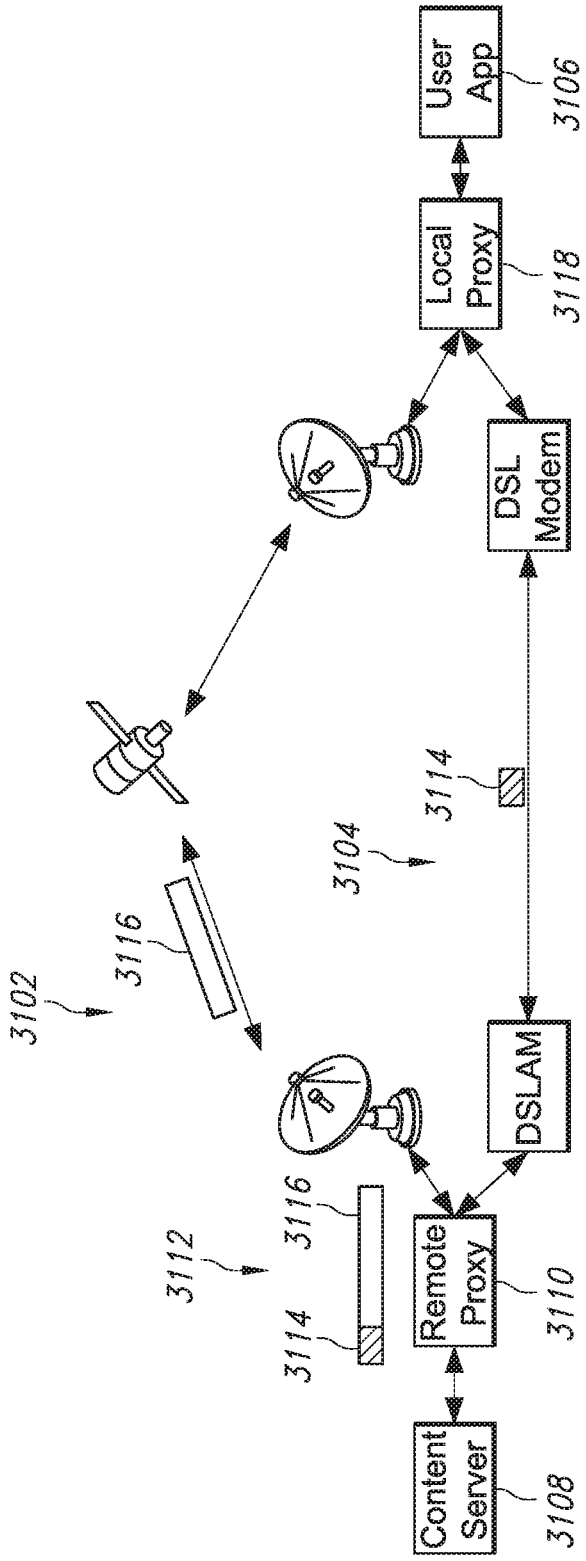
User App
3106
Local Proxy
3118
DSL Modem
3104
3114
3116
3102
3112
DSLAM
Remote Proxy
3110
Content Server
3108

FIG. 223

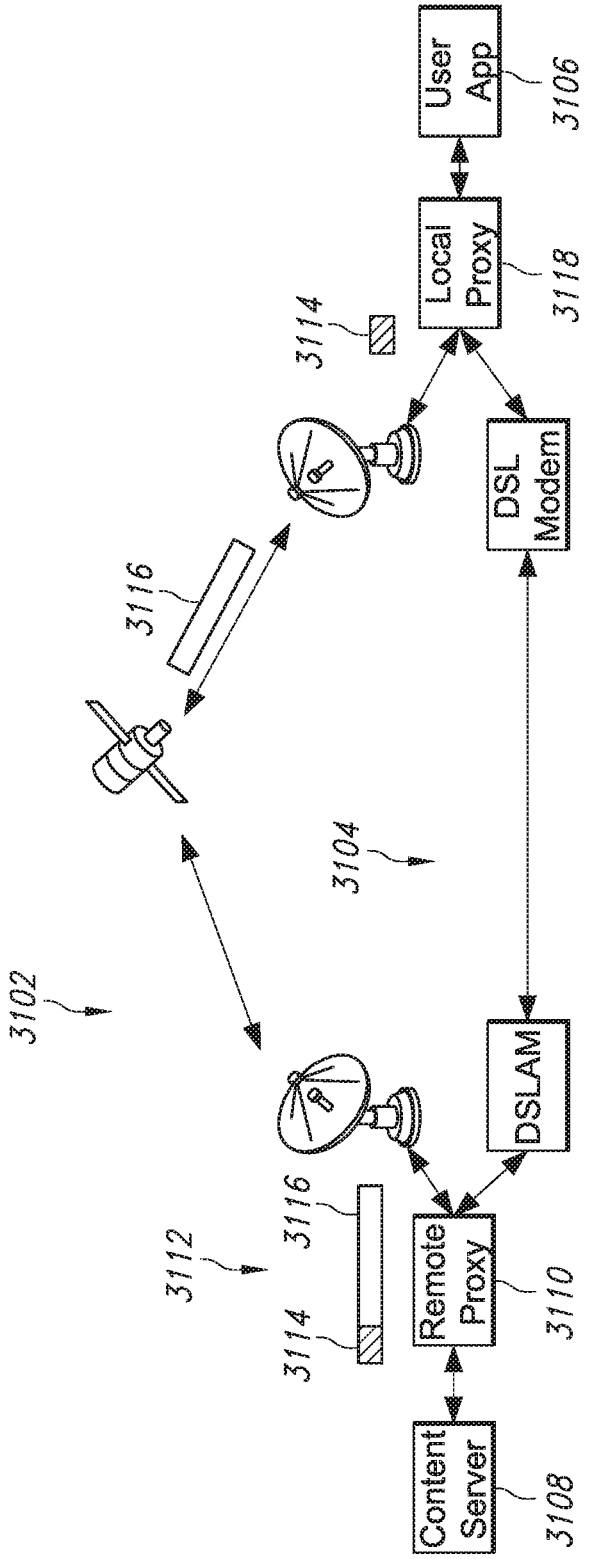
User App
3106
Local Proxy
3118
3114
DSL Modem
3116
3104
3102
DSLAM
3116
3112
3114
Remote Proxy
3110
Content Server
3108

FIG. 224

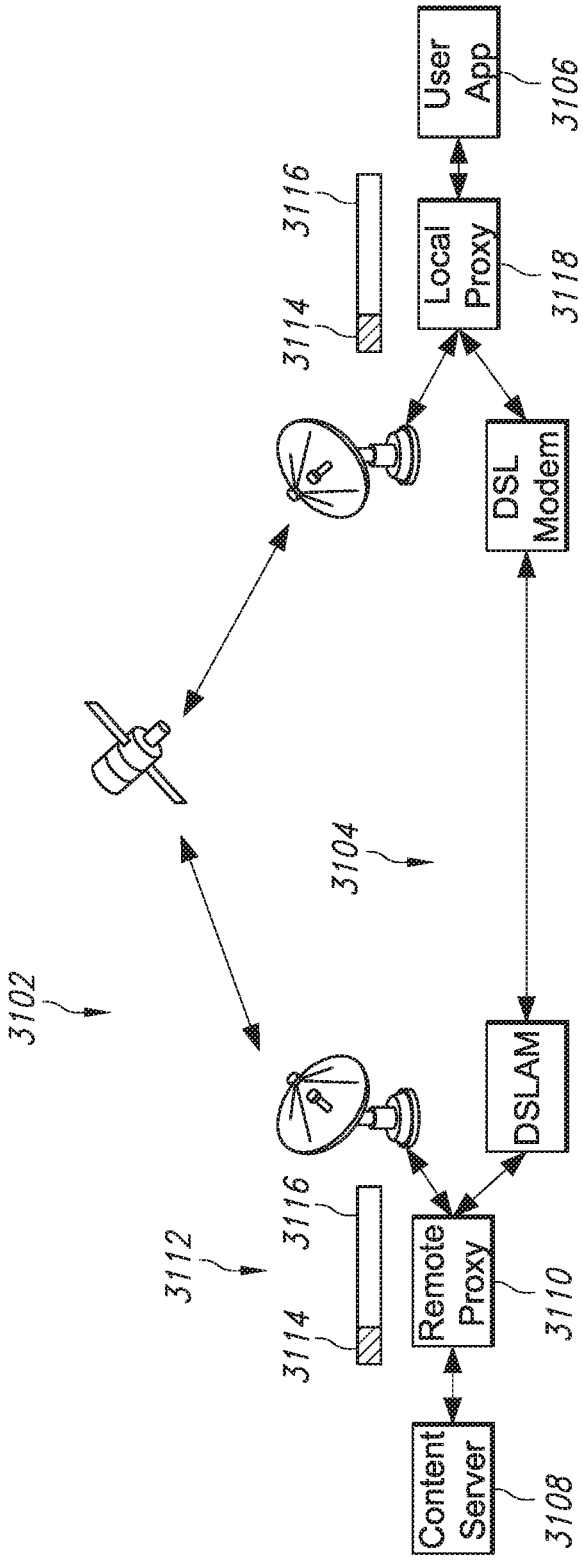
User App
3106
3116
Local Proxy
3118
3114
DSL Modem
3104
3102
DSLAM
3112
3116
Remote Proxy
3110
3114
Content Server
3108

FIG. 225

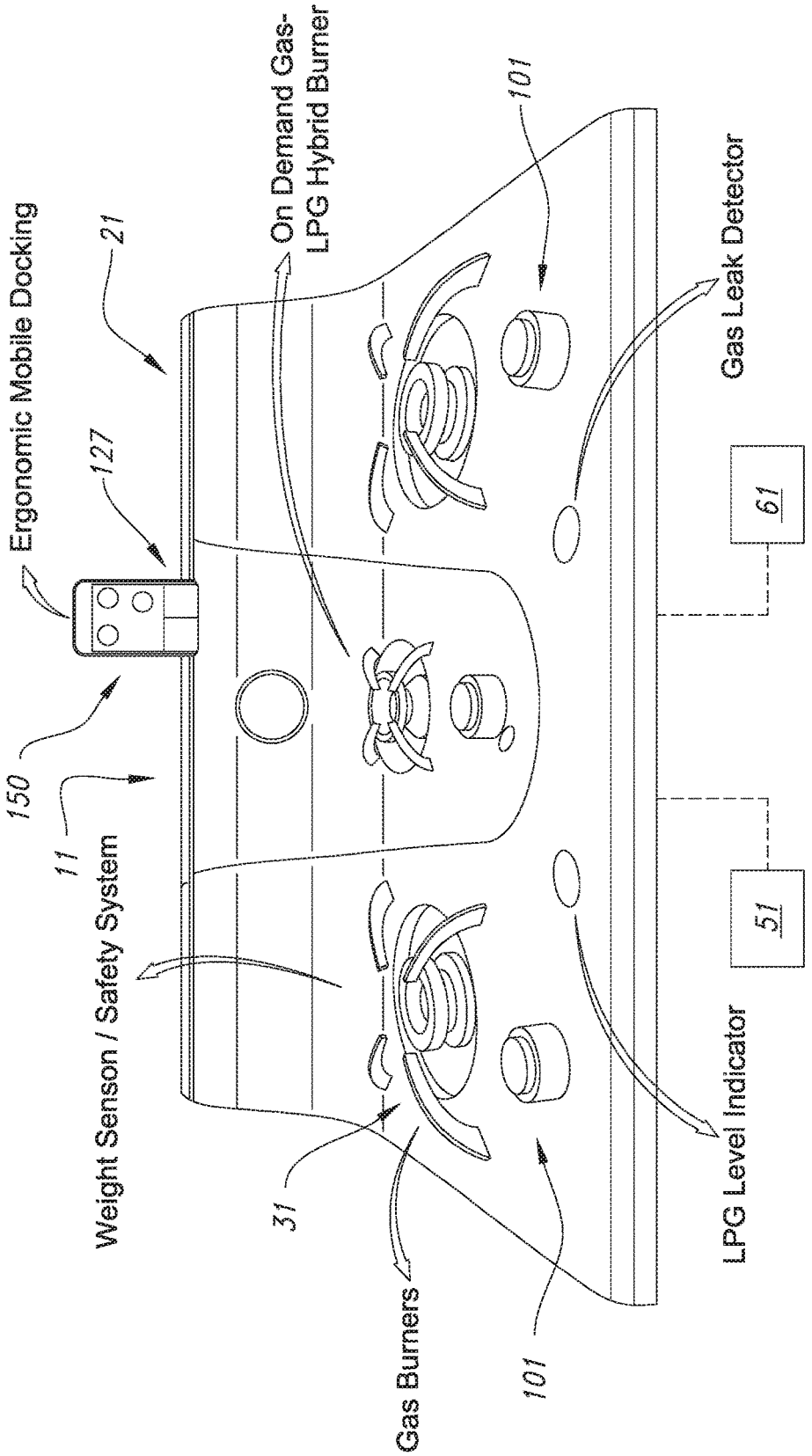
Ergonomic Mobile Docking
21
On Demand Gas-
LPG Hybrid Burner
101
Gas Leak Detector
127
61
150
11
Weight Senson / Safety System
51
31
LPG Level Indicator
Gas Burners
101

FIG. 226

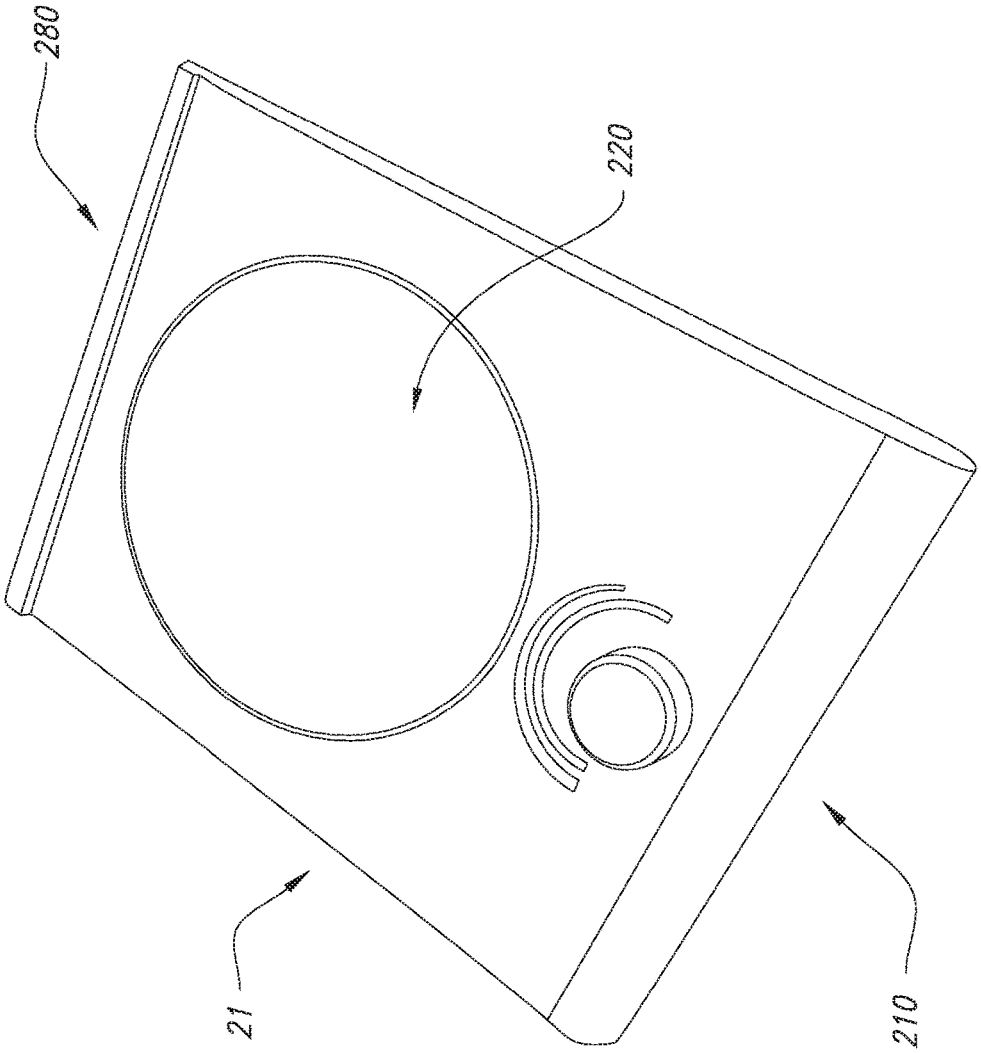


FIG. 227

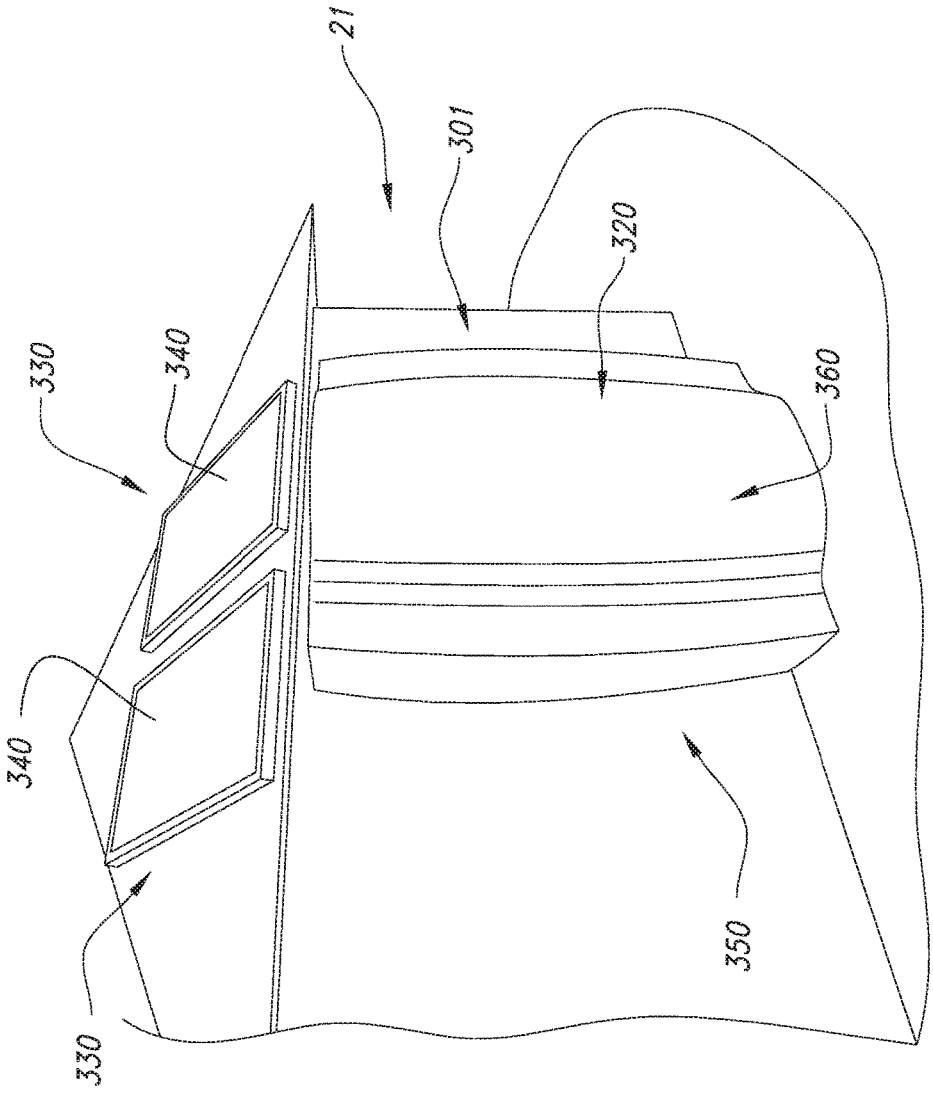


FIG. 228

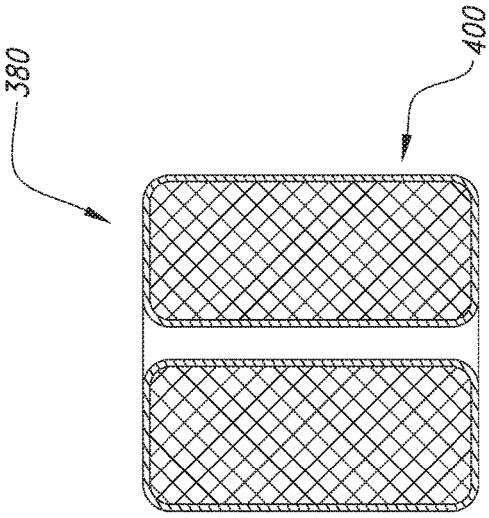


FIG. 230

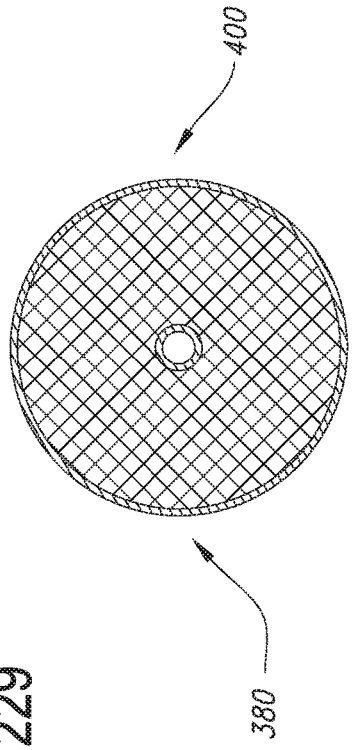


FIG. 231

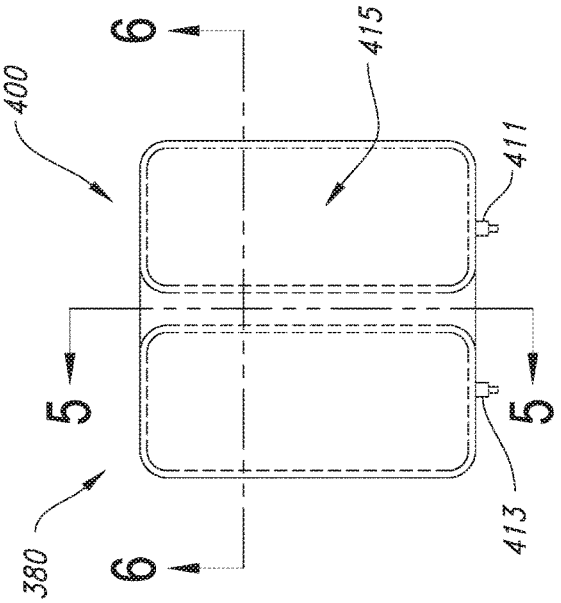


FIG. 229

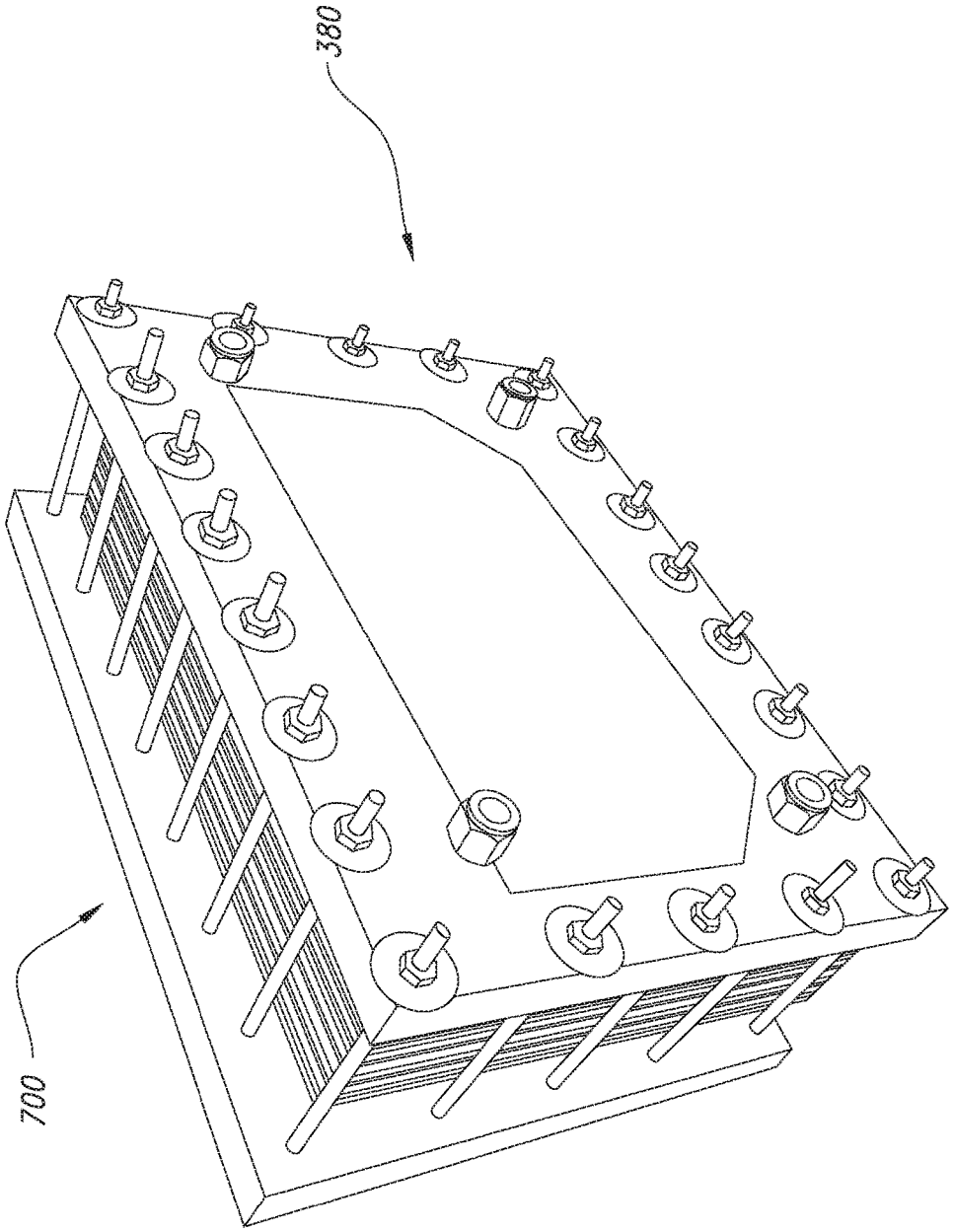


FIG. 232

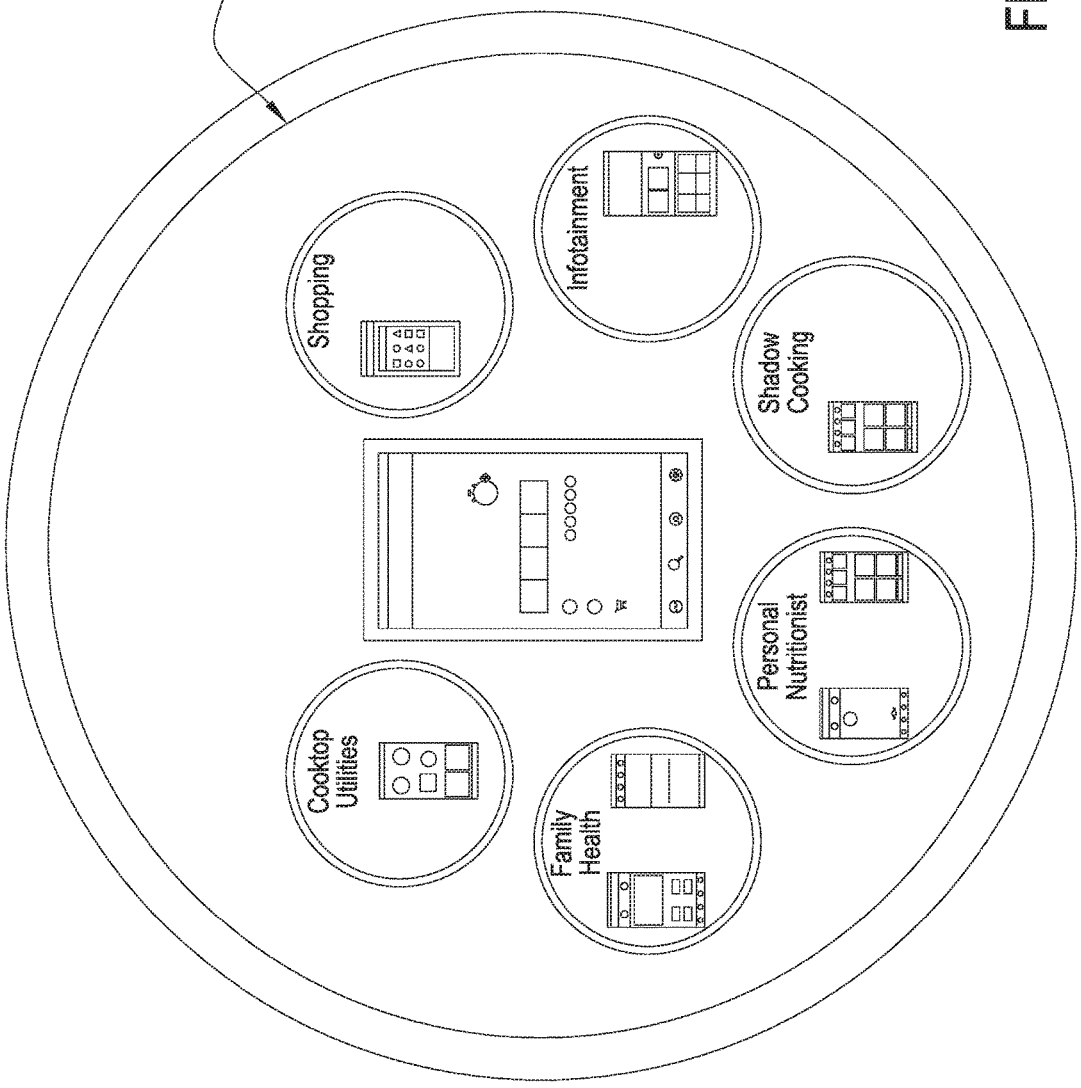
800
Shopping
Infotainment
Shadow Cooking
Personal Nutritionist
Family Health
Cooktop Utilities

FIG. 233

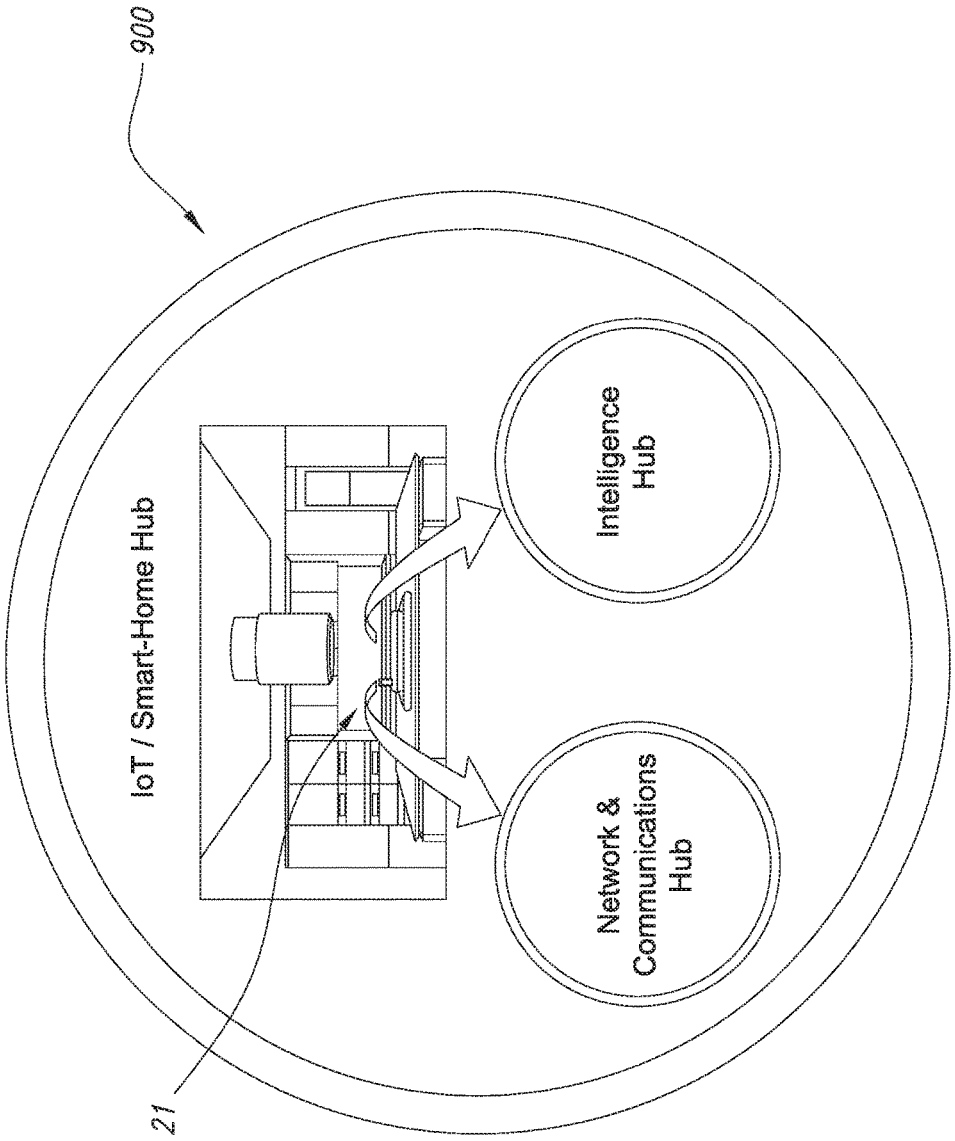
900
IoT / Smart-Home Hub
Intelligence Hub
Network & Communications Hub
21

FIG. 234

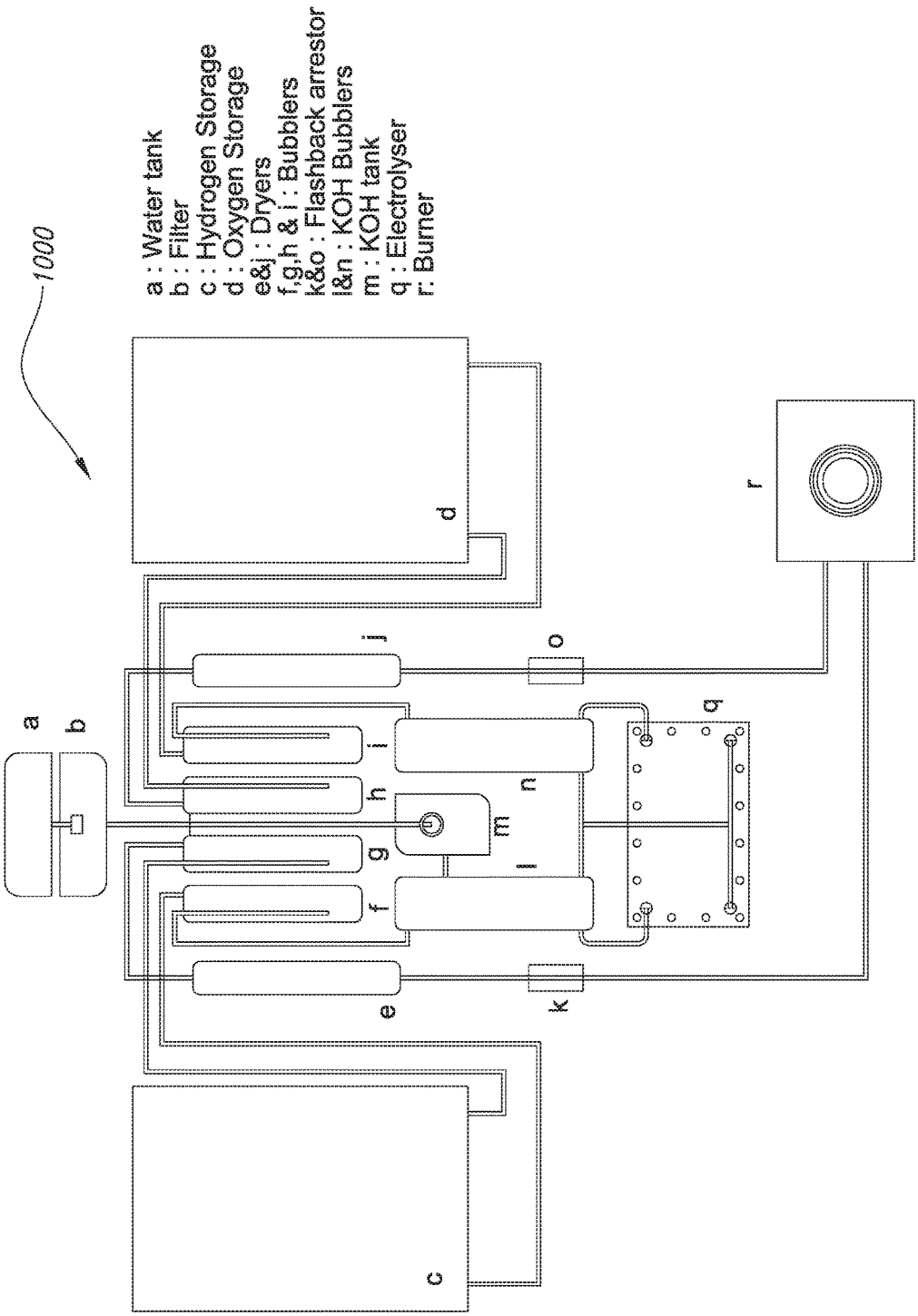
1000
a : Water tank
b : Filter
c : Hydrogen Storage
d : Oxygen Storage
e&j : Dryers
f,g,h & i : Bubblers
k&o : Flashback arrestor
l&n : KOH Bubblers
m : KOH tank
q : Electrolyser
r: Burner
a
b
c
d
e
f
g
h
i
j
k
l
m
n
o
q
r

FIG. 235

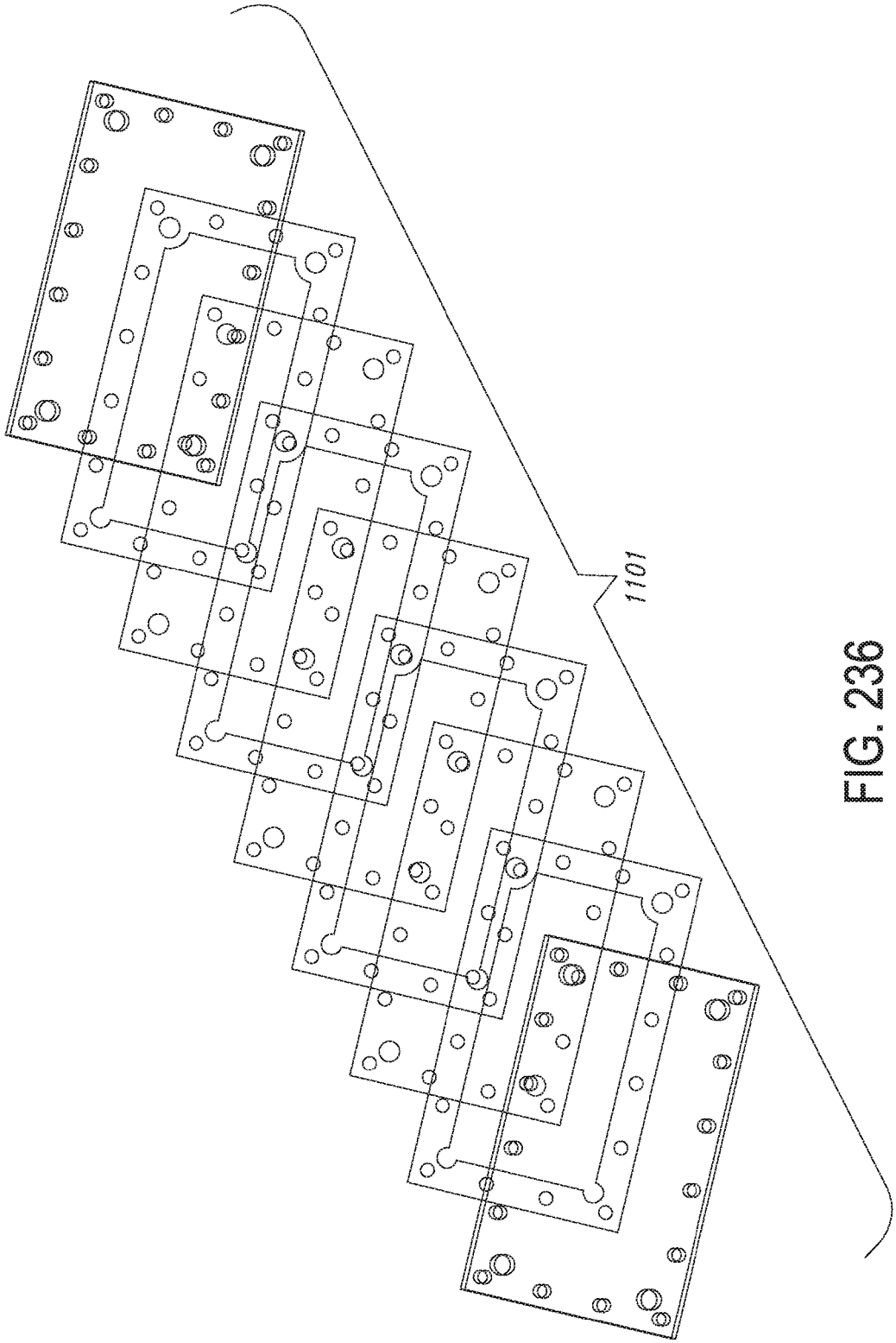


FIG. 236

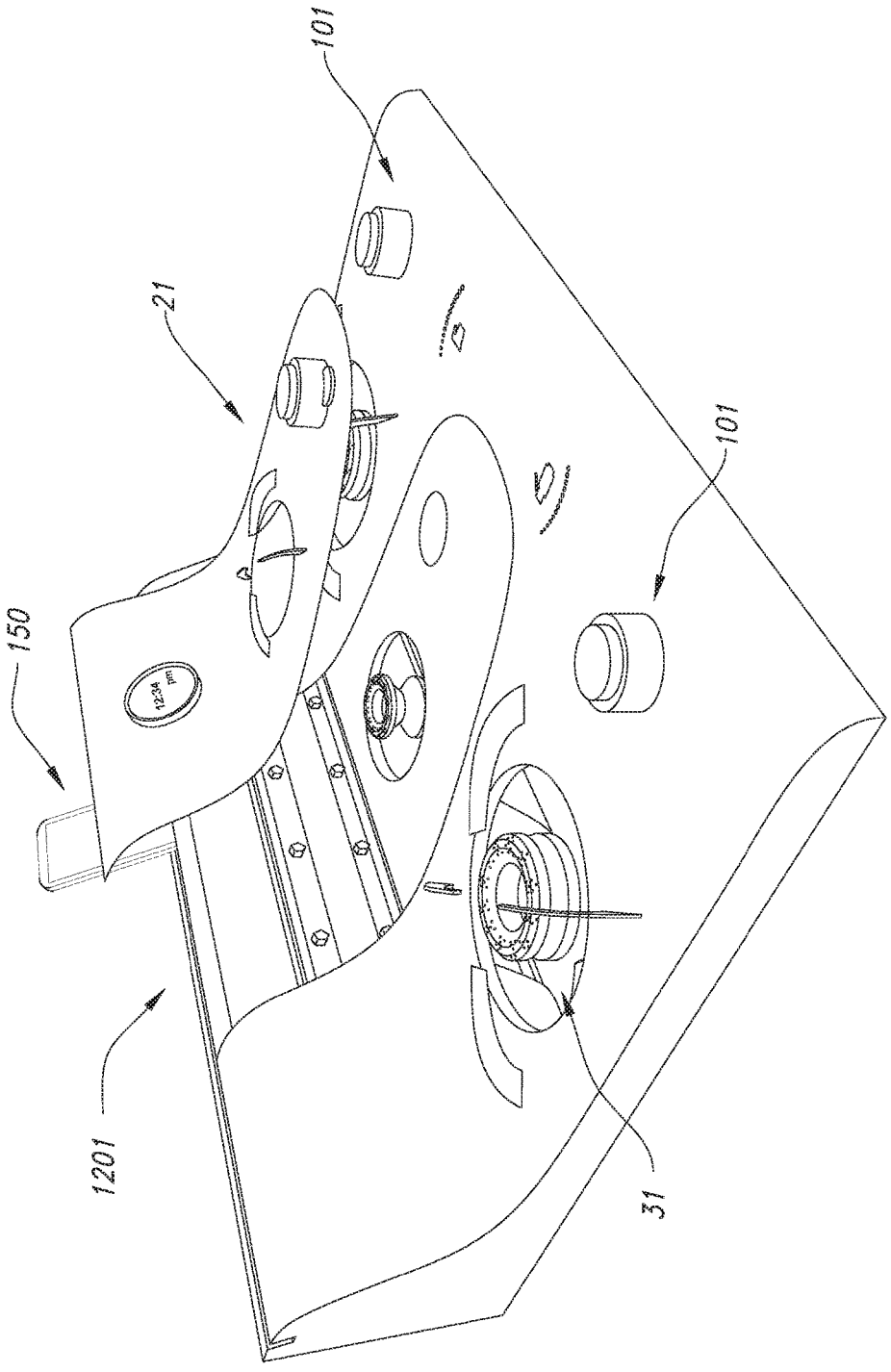


FIG. 237

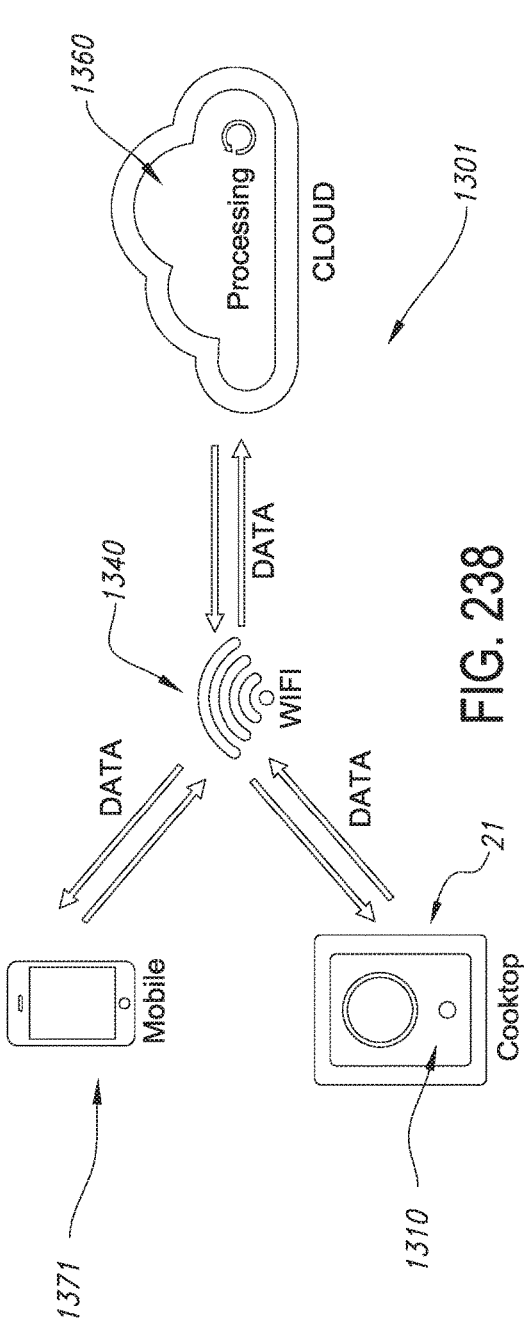


FIG. 238

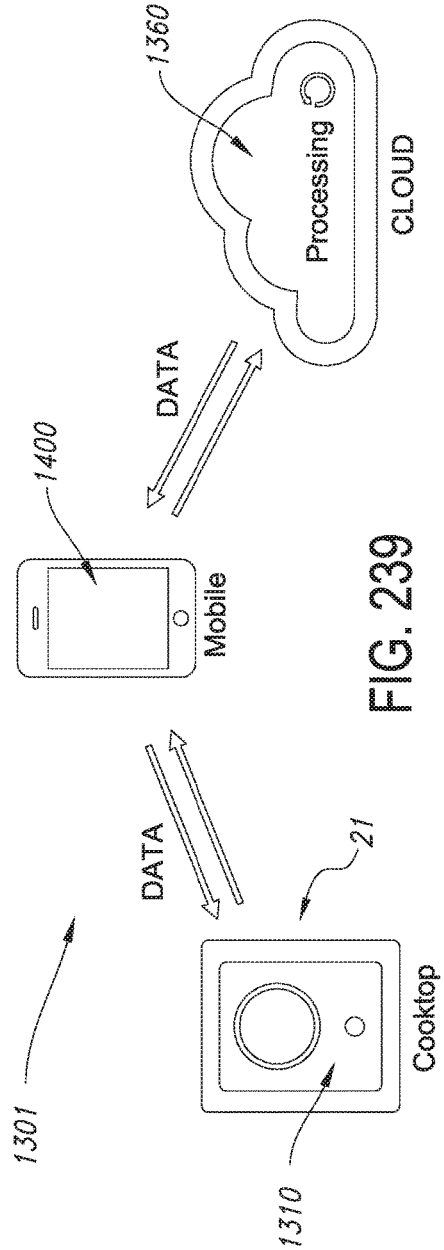


FIG. 239

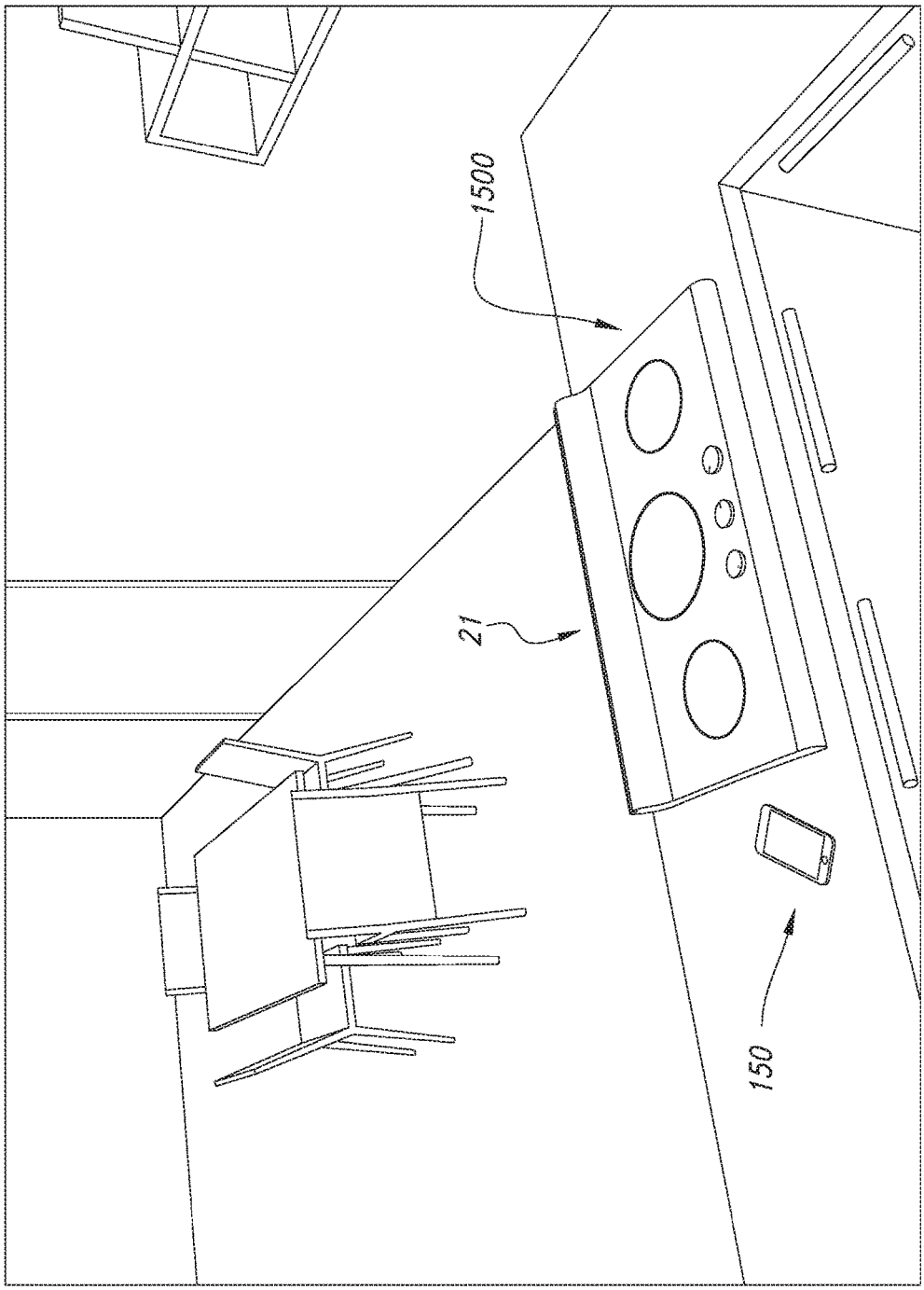


FIG. 240

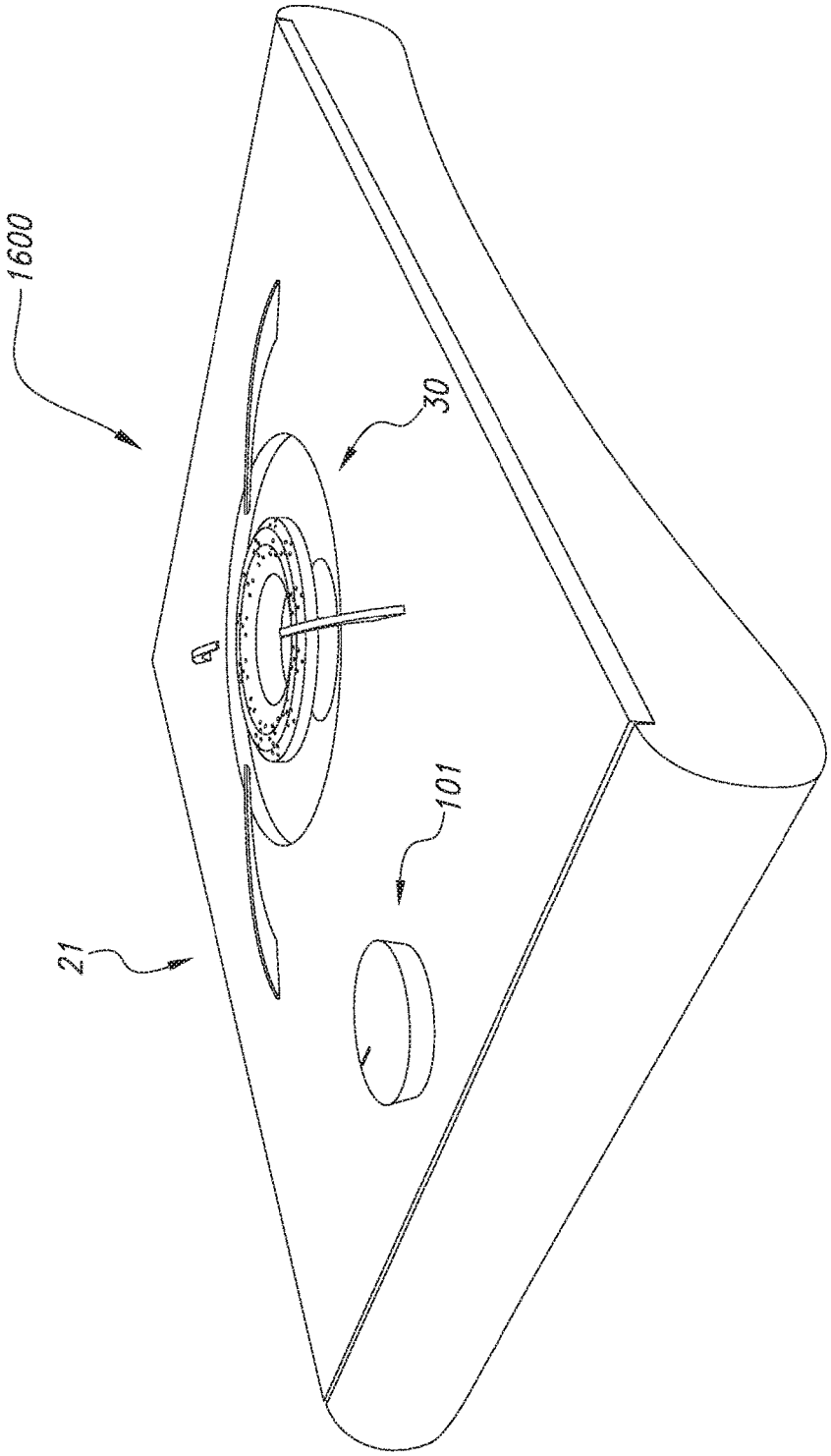


FIG. 241

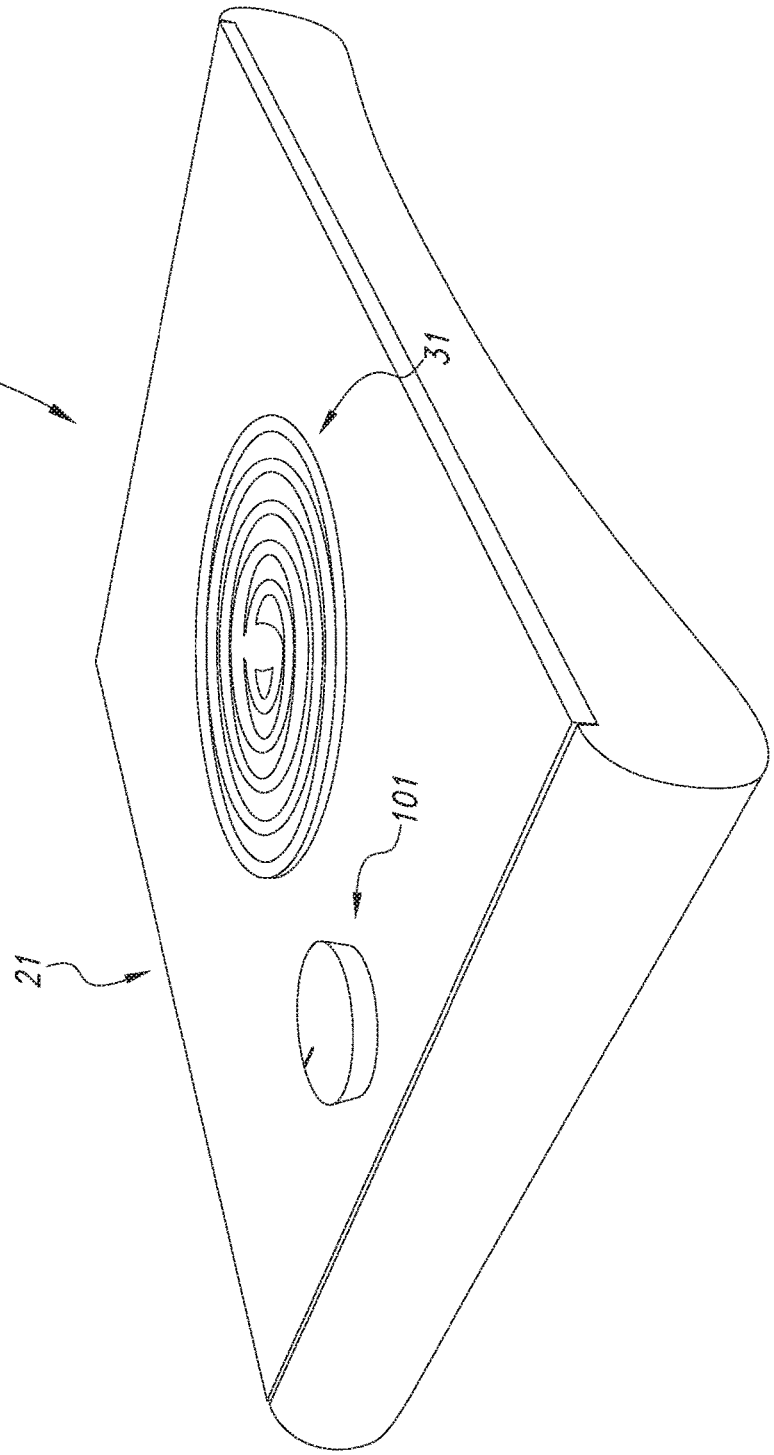


FIG. 242

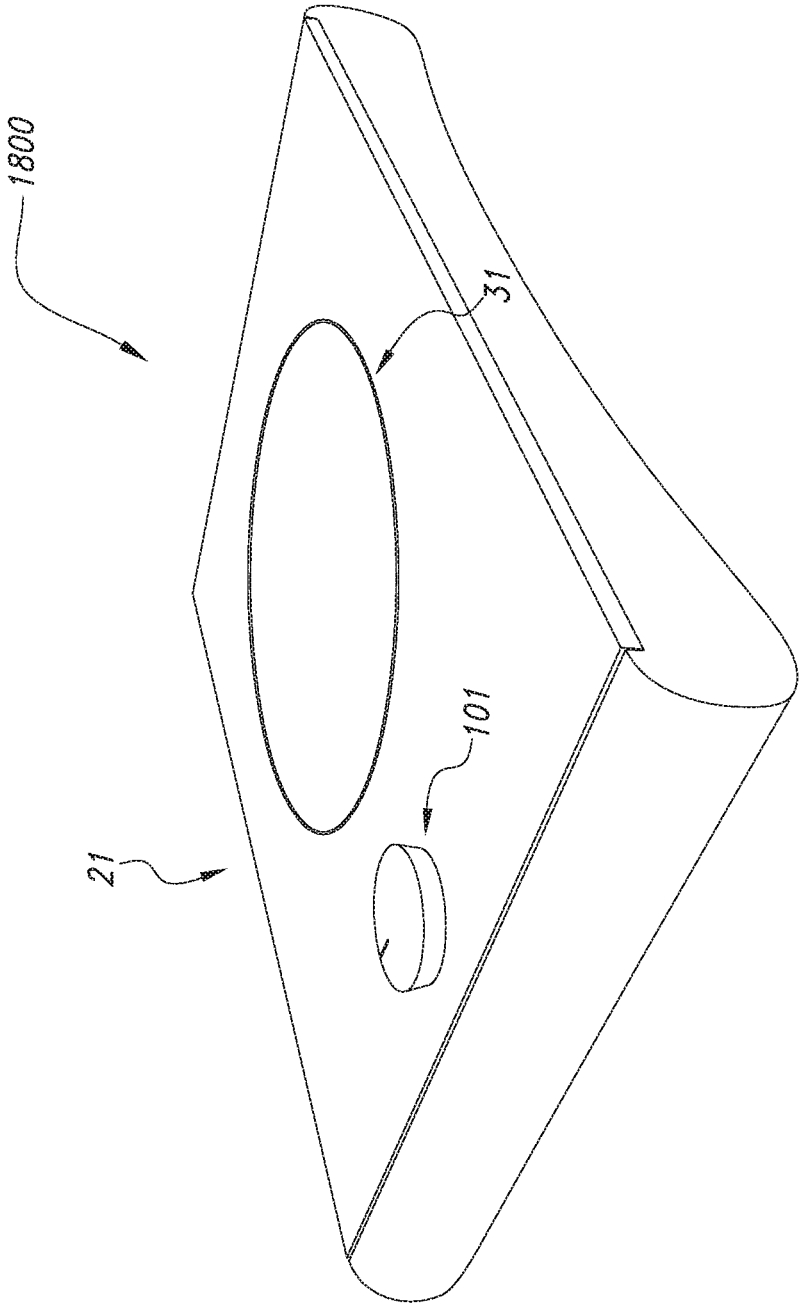


FIG. 243

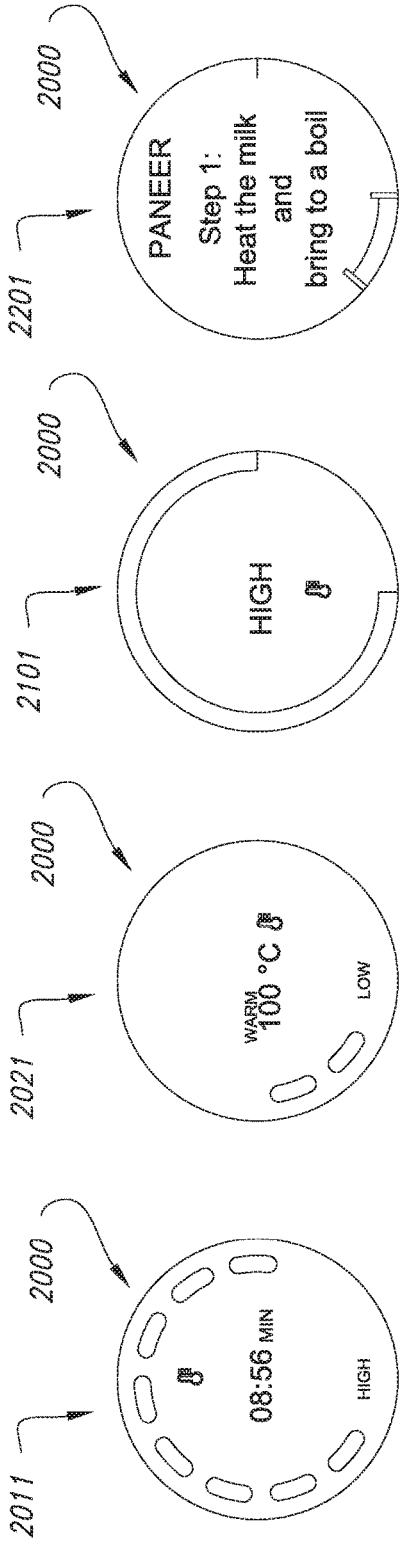


FIG. 244




FIG. 245




FIG. 246




FIG. 247

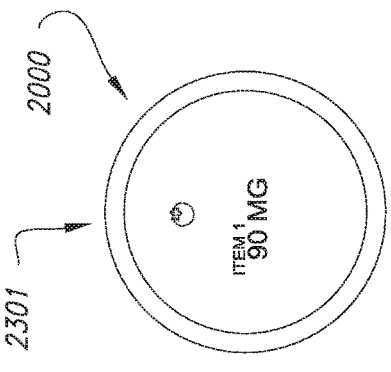


FIG. 248

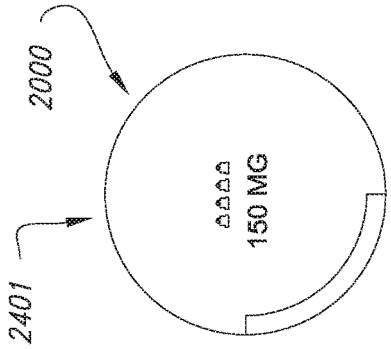


FIG. 249

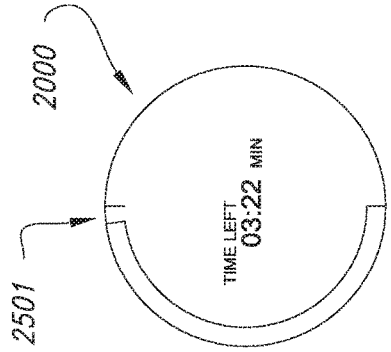


FIG. 250

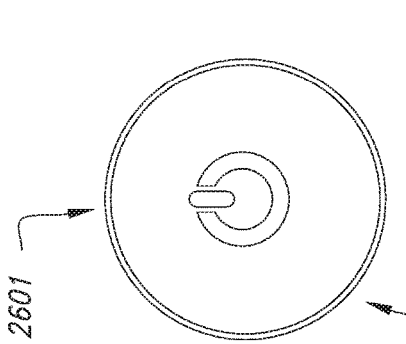


FIG. 251

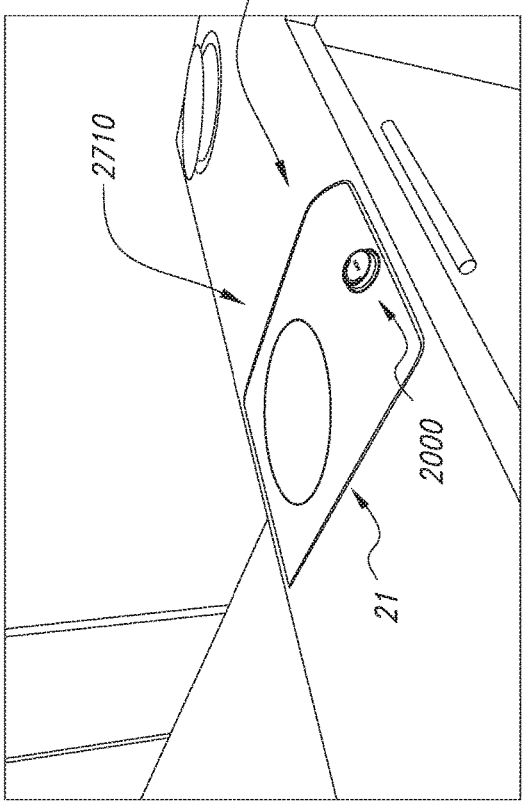


FIG. 252

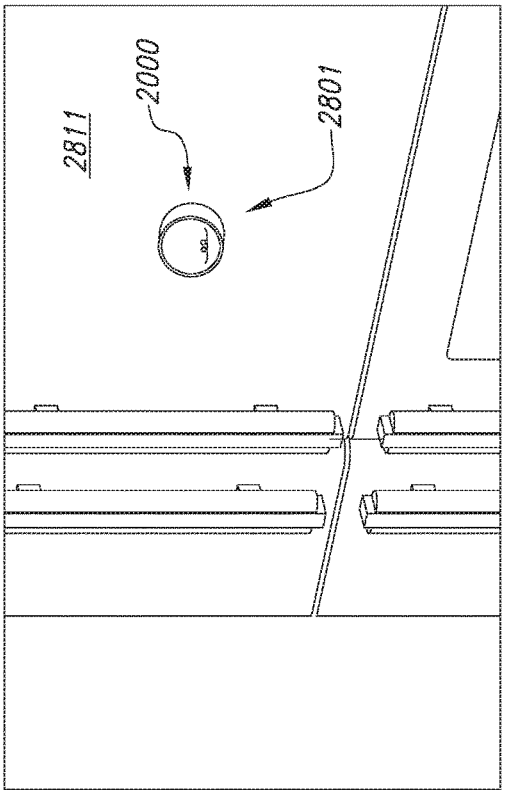


FIG. 253

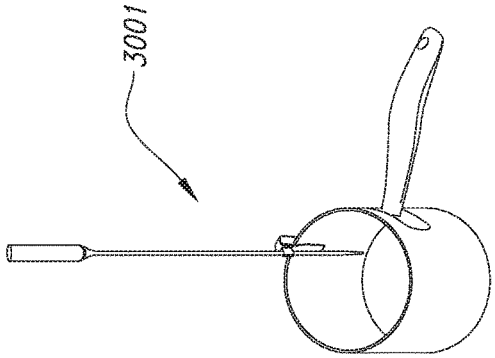


FIG. 255

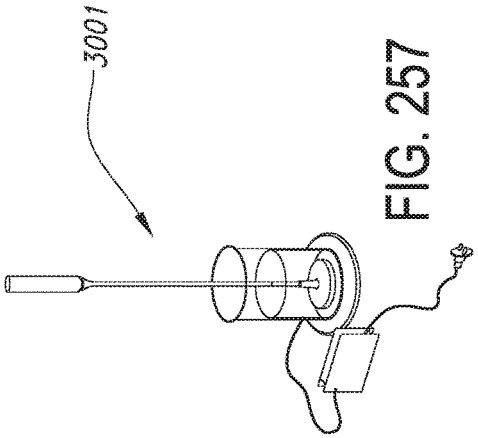


FIG. 257

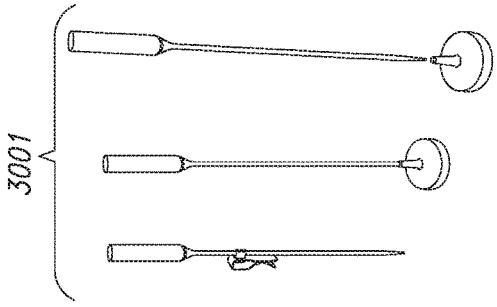


FIG. 254

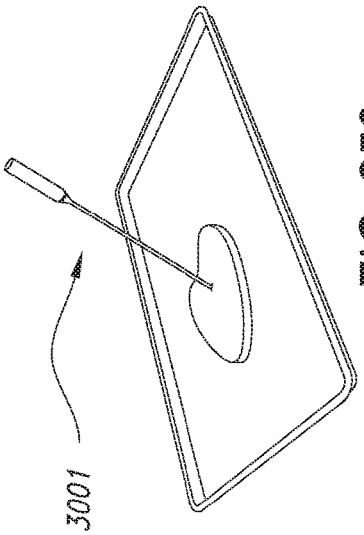


FIG. 256

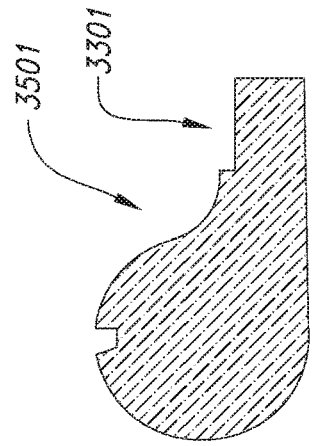


FIG. 260

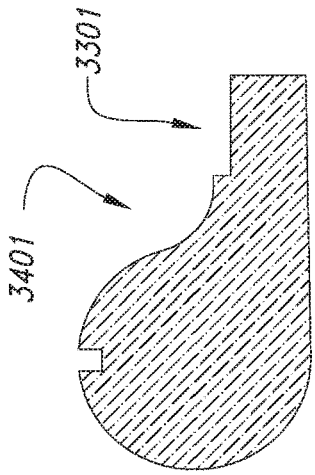


FIG. 259

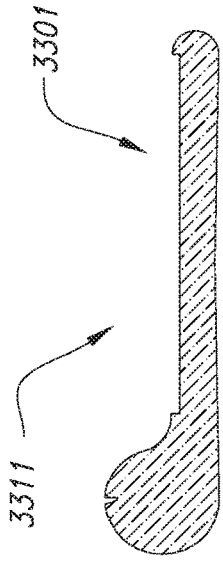


FIG. 258

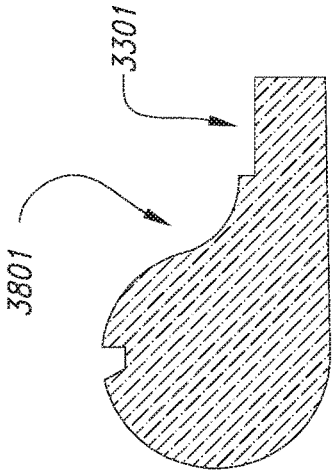


FIG. 263

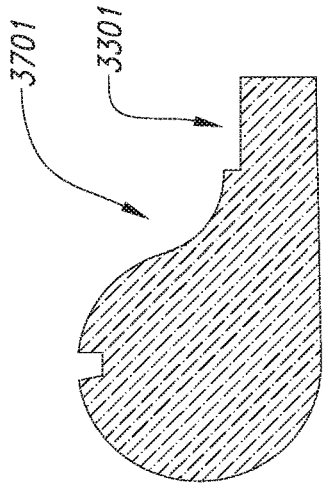


FIG. 262

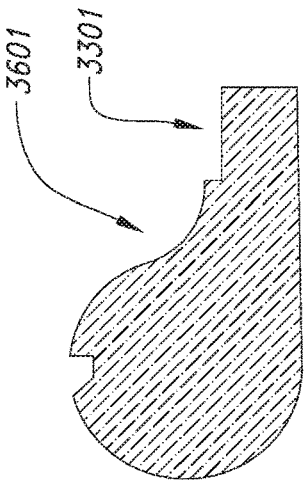


FIG. 261

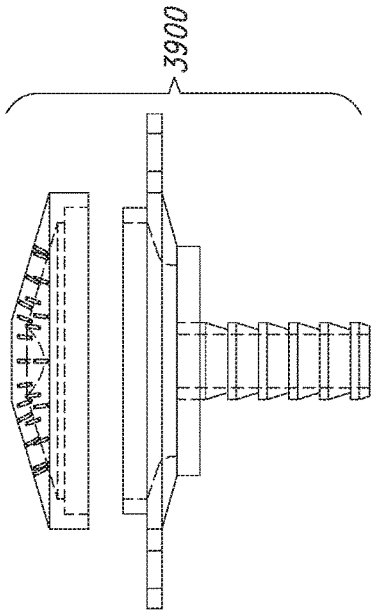


FIG. 266

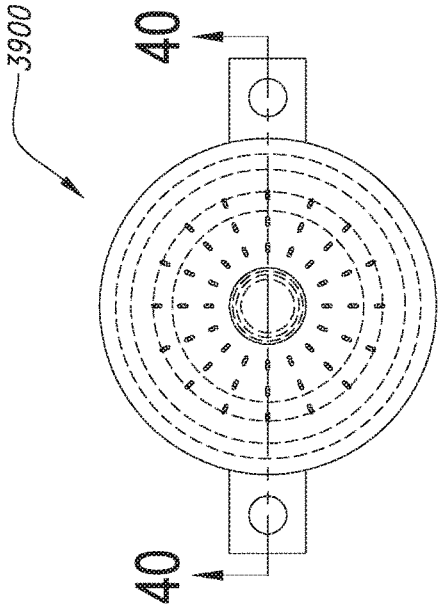


FIG. 264

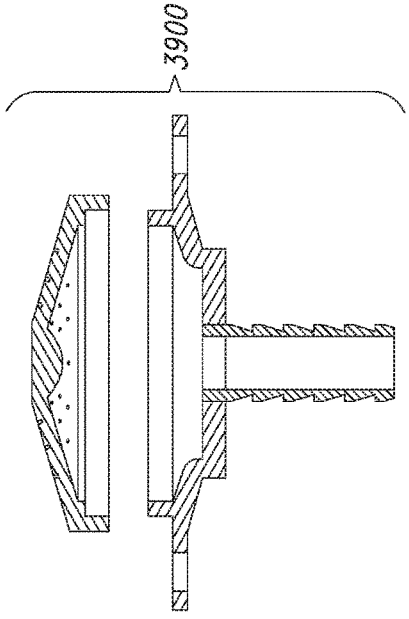


FIG. 265

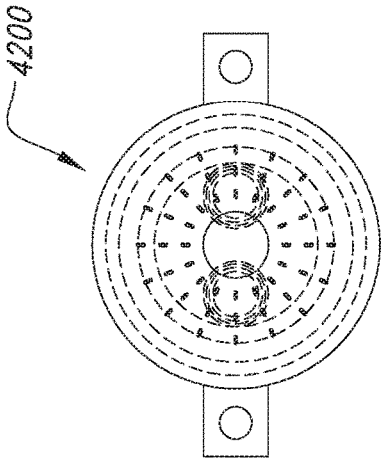


FIG. 271

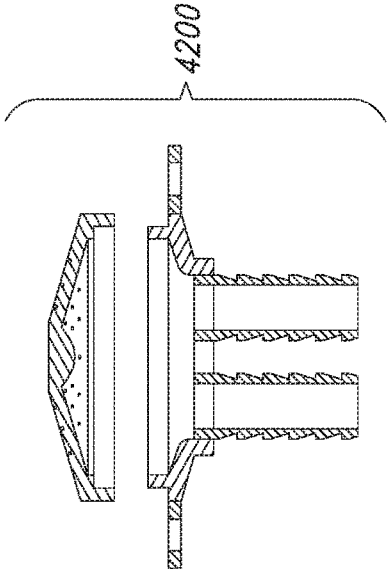


FIG. 268

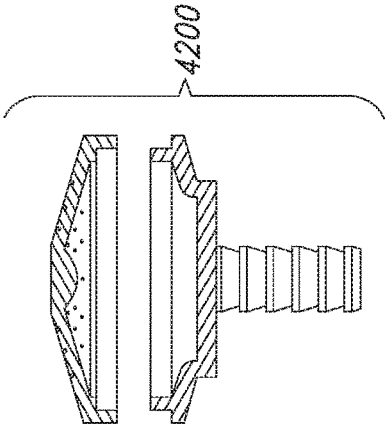


FIG. 270

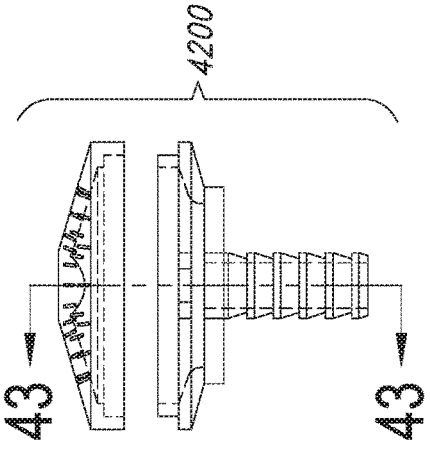


FIG. 267

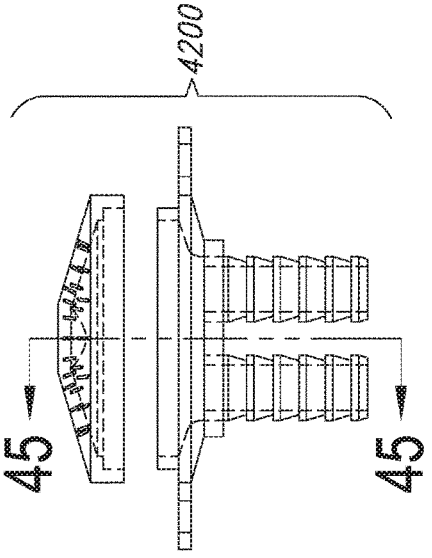


FIG. 269

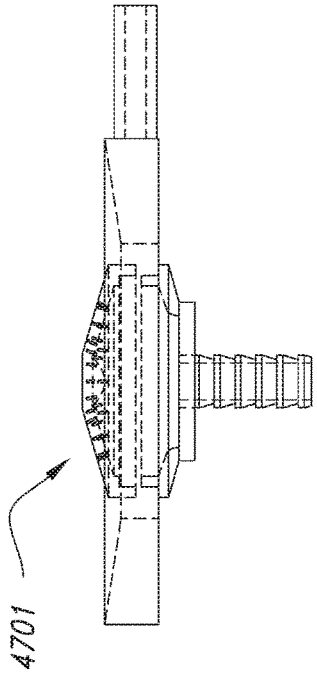


FIG. 273

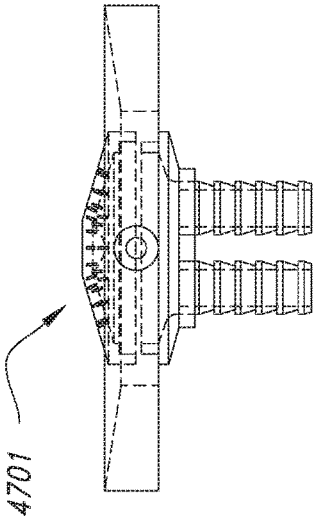


FIG. 272

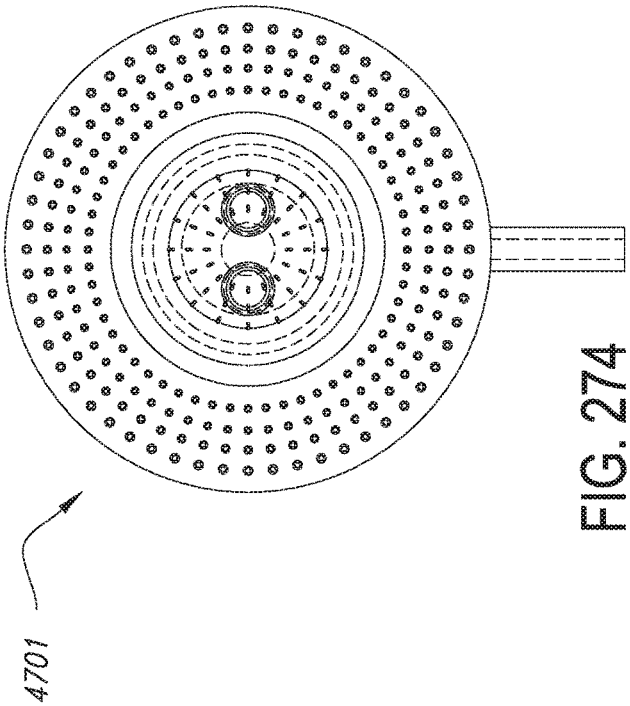


FIG. 274

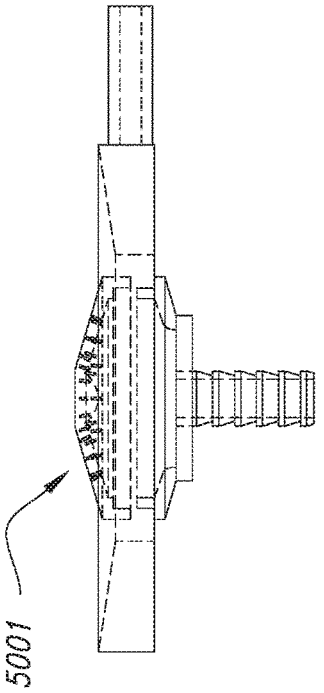


FIG. 276

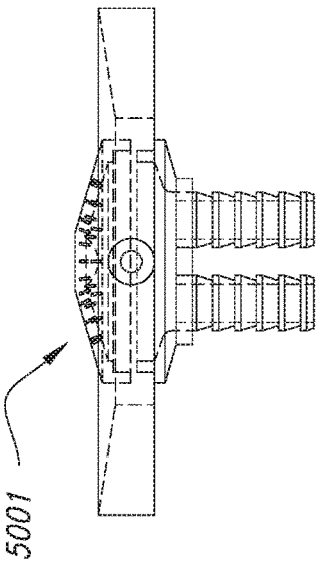


FIG. 275

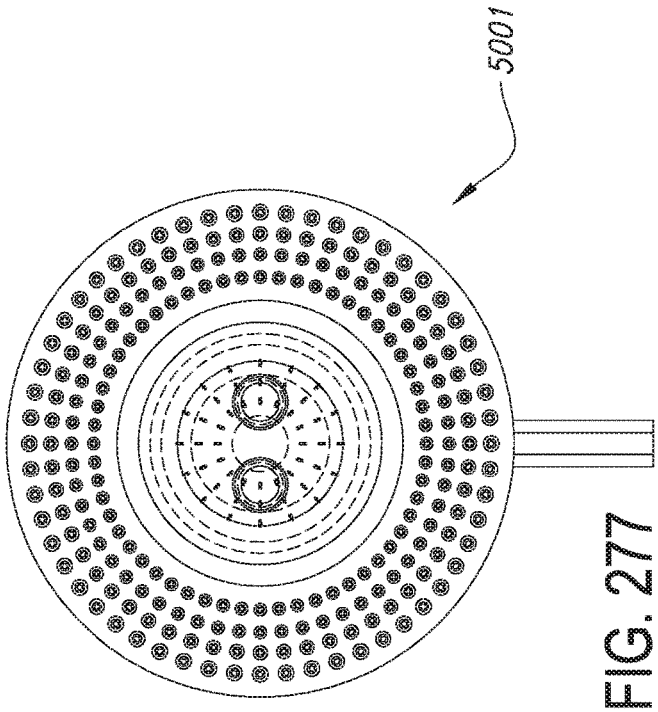


FIG. 277

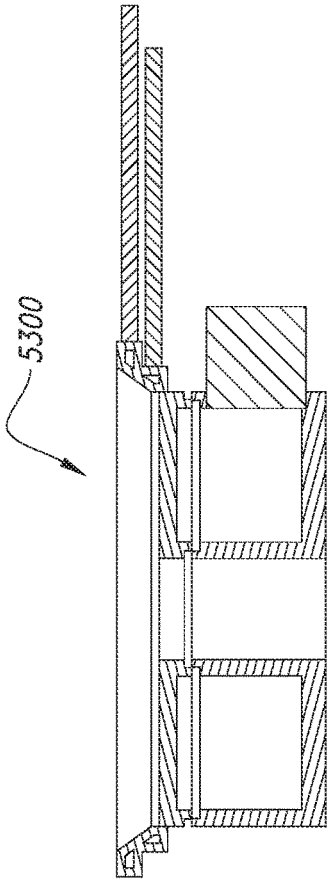


FIG. 279

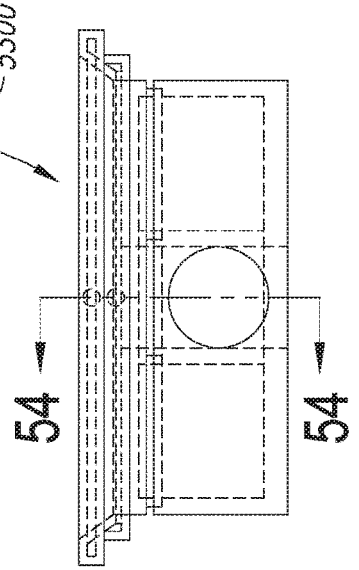


FIG. 278

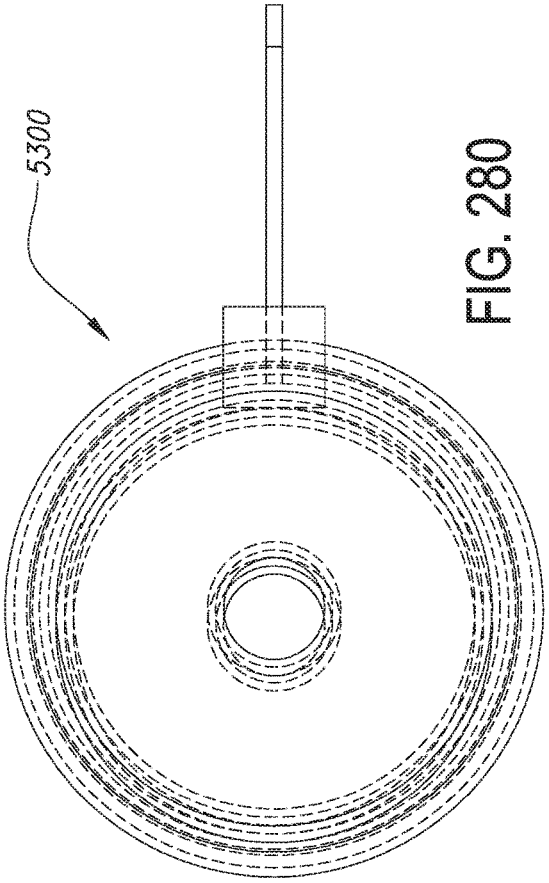


FIG. 280

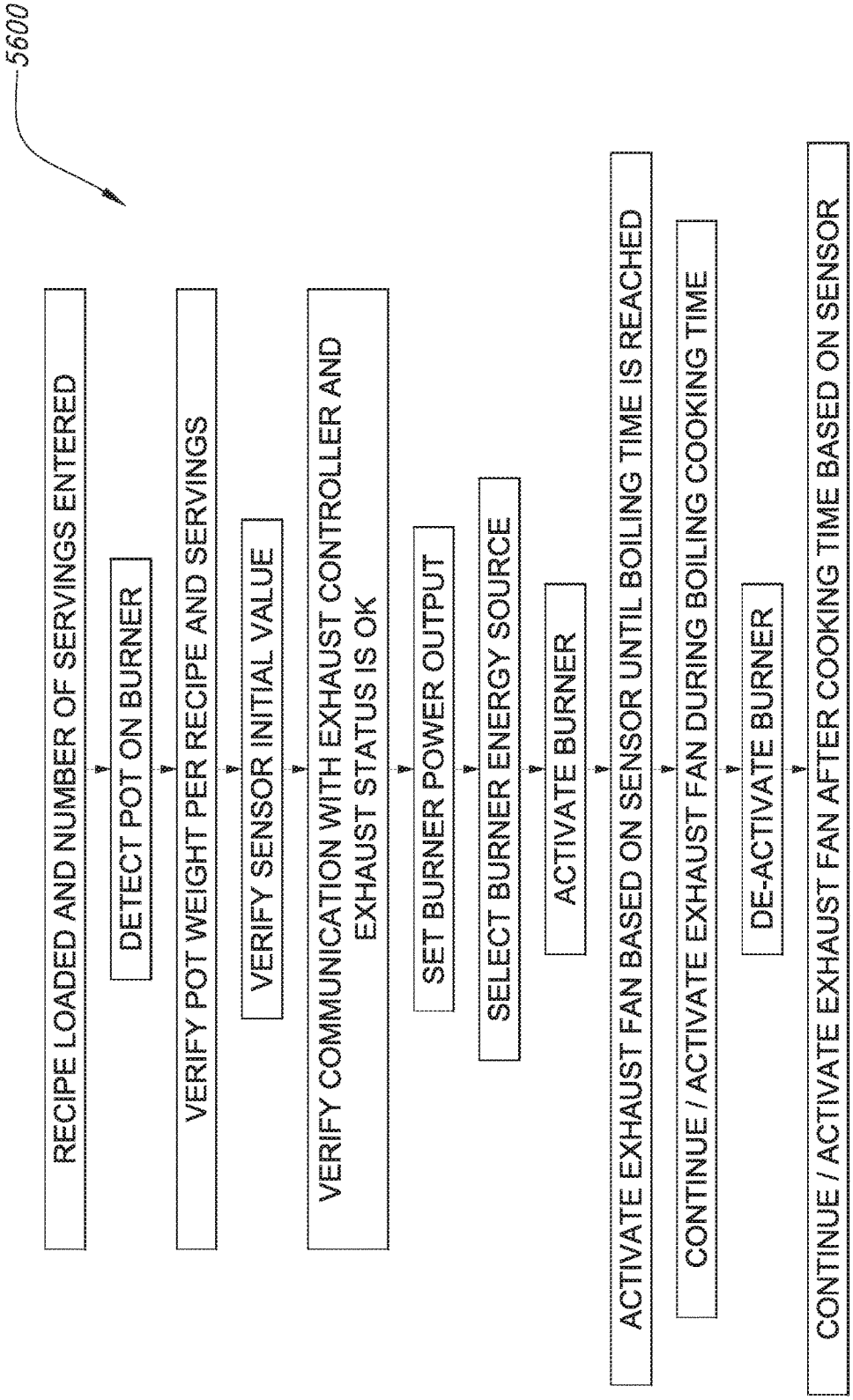
5600
RECIPE LOADED AND NUMBER OF SERVINGS ENTERED
DETECT POT ON BURNER
VERIFY POT WEIGHT PER RECIPE AND SERVINGS
VERIFY SENSOR INITIAL VALUE
VERIFY COMMUNICATION WITH EXHAUST CONTROLLER AND EXHAUST STATUS IS OK
SET BURNER POWER OUTPUT
SELECT BURNER ENERGY SOURCE
ACTIVATE BURNER
ACTIVATE EXHAUST FAN BASED ON SENSOR UNTIL BOILING TIME IS REACHED
CONTINUE / ACTIVATE EXHAUST FAN DURING BOILING COOKING TIME
DE-ACTIVATE BURNER
CONTINUE / ACTIVATE EXHAUST FAN AFTER COOKING TIME BASED ON SENSOR

FIG. 281

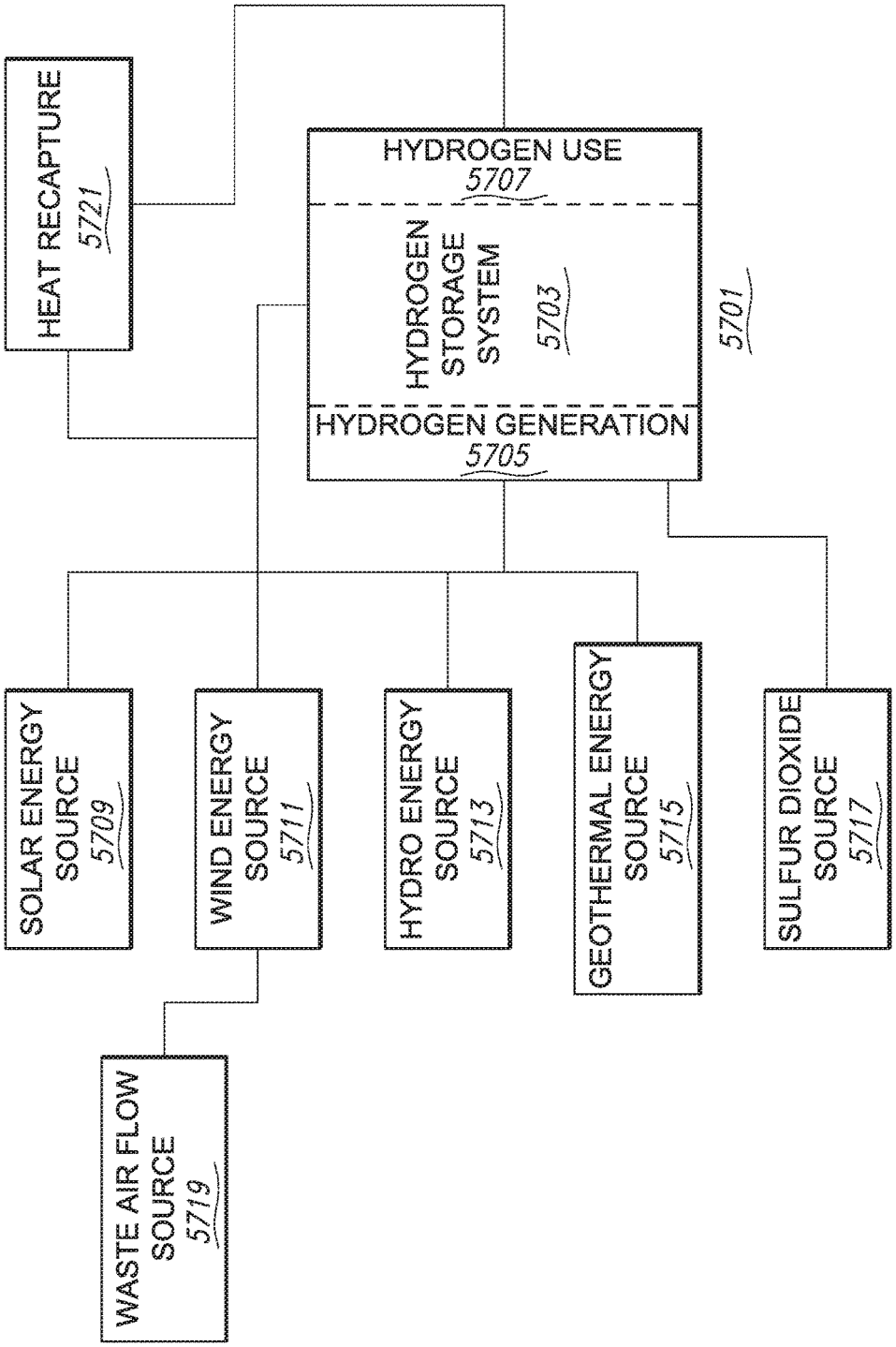
HEAT RECAPTURE
5721
HYDROGEN USE
5707
HYDROGEN STORAGE SYSTEM
5703
HYDROGEN GENERATION
5705
5701
SOLAR ENERGY SOURCE
5709
WIND ENERGY SOURCE
5711
HYDRO ENERGY SOURCE
5713
GEOTHERMAL ENERGY SOURCE
5715
SULFUR DIOXIDE SOURCE
5717
WASTE AIR FLOW SOURCE
5719

FIG. 282

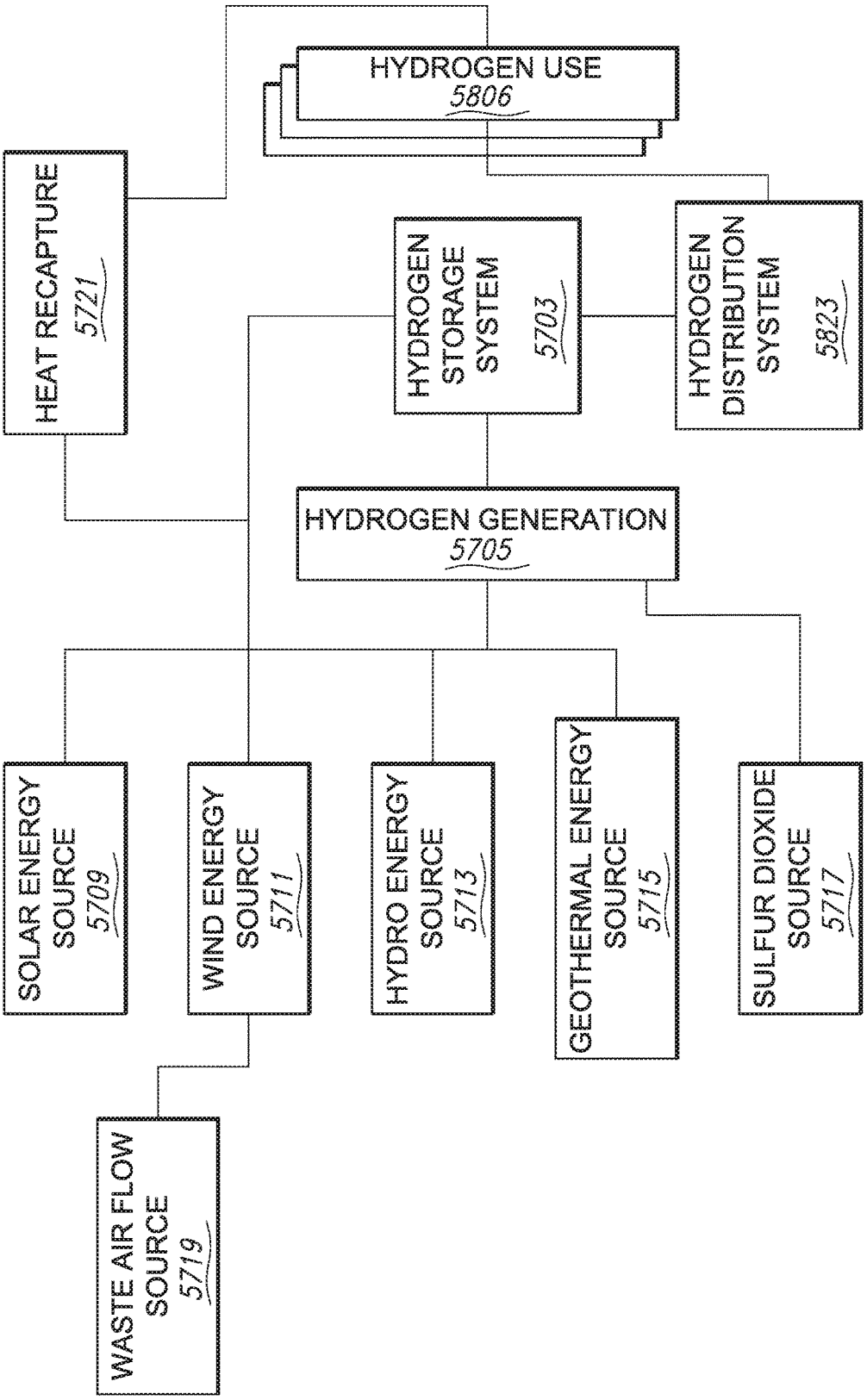
HYDROGEN USE
5806
HEAT RECAPTURE
5721
HYDROGEN STORAGE SYSTEM
5703
HYDROGEN DISTRIBUTION SYSTEM
5823
HYDROGEN GENERATION
5705
SOLAR ENERGY SOURCE
5709
WIND ENERGY SOURCE
5711
HYDRO ENERGY SOURCE
5713
GEOTHERMAL ENERGY SOURCE
5715
SULFUR DIOXIDE SOURCE
5717
WASTE AIR FLOW SOURCE
5719

FIG. 283

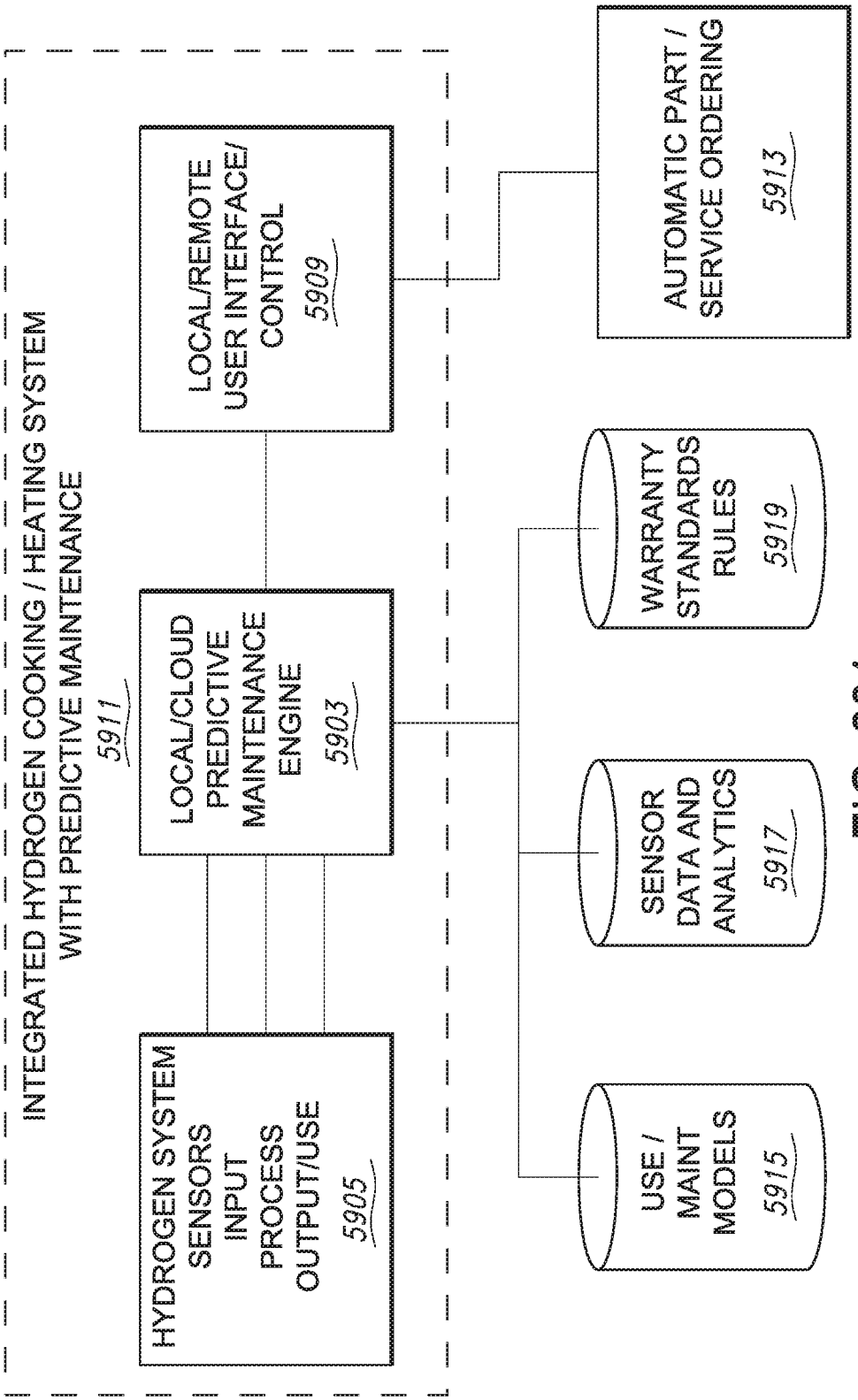
INTEGRATED HYDROGEN COOKING / HEATING SYSTEM WITH PREDICTIVE MAINTENANCE
5911
HYDROGEN SYSTEM SENSORS INPUT PROCESS OUTPUT/USE
5905
LOCAL/CLOUD PREDICTIVE MAINTENANCE ENGINE
5903
LOCAL/REMOTE USER INTERFACE/ CONTROL
5909
AUTOMATIC PART / SERVICE ORDERING
5913
WARRANTY STANDARDS RULES
5919
SENSOR DATA AND ANALYTICS
5917
USE / MAINT MODELS
5915

FIG. 284

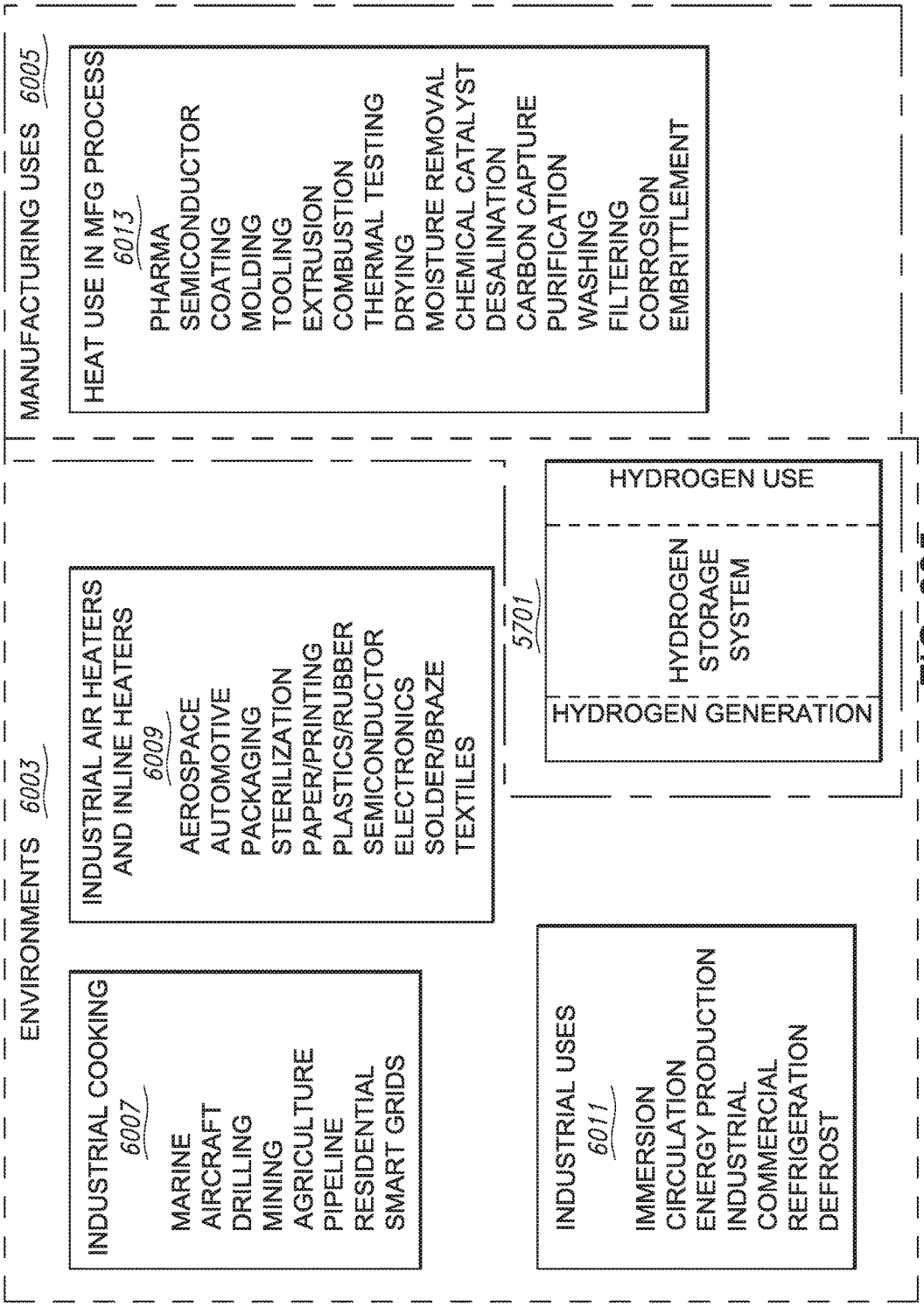
ENVIRONMENTS 6003
INDUSTRIAL COOKING 6007
MARINE
AIRCRAFT
DRILLING
MINING
AGRICULTURE
PIPELINE
RESIDENTIAL
SMART GRIDS
INDUSTRIAL AIR HEATERS AND INLINE HEATERS 6009
AEROSPACE
AUTOMOTIVE
PACKAGING
STERILIZATION
PAPER/PRINTING
PLASTICS/RUBBER
SEMICONDUCTOR
ELECTRONICS
SOLDER/BRAZE
TEXTILES
INDUSTRIAL USES 6011
IMMERSION
CIRCULATION
ENERGY PRODUCTION
INDUSTRIAL
COMMERCIAL
REFRIGERATION
DEFROST
5701
HYDROGEN USE
HYDROGEN GENERATION
HYDROGEN STORAGE SYSTEM
MANUFACTURING USES 6005
HEAT USE IN MFG PROCESS 6013
PHARMA
SEMICONDUCTOR
COATING
MOLDING
TOOLING
EXTRUSION
COMBUSTION
THERMAL TESTING
DRYING
MOISTURE REMOVAL
CHEMICAL CATALYST
DESALINATION
CARBON CAPTURE
PURIFICATION
WASHING
FILTERING
CORROSION
EMBRITTLEMENT

FIG. 285

# METHODS AND SYSTEMS FOR INDUSTRIAL INTERNET OF THINGS DATA COLLECTION FOR EQUIPMENT ANALYSIS IN AN UPSTREAM OIL AND GAS ENVIRONMENT

## CROSS-REFERENCE TO RELATED APPLICATIONS

**[0001]** This application is a bypass continuation-in-part of International Application Number PCT/US2017/031721, filed: May 9, 2017, entitled METHODS AND SYSTEM FOR THE INDUSTRIAL INTERNET OF THINGS, published on Nov. 16, 2017, as WO/2017/196821, and which claims priority to U.S. Provisional Patent Application Ser. No. 62/333,589, filed May 9, 2016, entitled STRONG FORCE INDUSTRIAL IOT MATRIX; U.S. Provisional Patent Application Ser. No. 62/350,672, filed Jun. 15, 2016, entitled STRATEGY FOR HIGH SAMPLING RATE DIGITAL RECORDING OF MEASUREMENT WAVEFORM DATA AS PART OF AN AUTOMATED SEQUENTIAL LIST THAT STREAMS LONG-DURATION AND GAP-FREE WAVEFORM DATA TO STORAGE FOR MORE FLEXIBLE POST-PROCESSING; U.S. Provisional Patent Application Ser. No. 62/412,843, filed Oct. 26, 2016, entitled METHODS AND SYSTEMS FOR THE INDUSTRIAL INTERNET OF THINGS; and U.S. Provisional Patent Application Ser. No. 62/427,141, filed Nov. 28, 2016, entitled METHODS AND SYSTEMS FOR THE INDUSTRIAL INTERNET OF THINGS. This application also claims priority to U.S. Provisional Patent Application Ser. No. 62/540,557, filed Aug. 2, 2017, entitled SMART HEATING SYSTEMS IN AN INDUSTRIAL INTERNET OF THINGS; U.S. Provisional Patent Application Ser. No. 62/562,487, filed Sep. 24, 2017, entitled METHODS AND SYSTEMS FOR THE INDUSTRIAL INTERNET OF THINGS; and U.S. Provisional Patent Application Ser. No. 62/583,487, filed Nov. 8, 2017, entitled METHODS AND SYSTEMS FOR THE INDUSTRIAL INTERNET OF THINGS. The above applications are hereby incorporated by reference as if fully set forth herein in their entirety.

## BACKGROUND

### 1. Field

**[0002]** The present disclosure relates to methods and systems for data collection in industrial environments, as well as methods and systems for leveraging collected data for monitoring, remote control, autonomous action, and other activities in industrial environments.

### 2. Description of the Related Art

**[0003]** Heavy industrial environments, such as environments for large scale manufacturing (such as manufacturing of aircraft, ships, trucks, automobiles, and large industrial machines), energy production environments (such as oil and gas plants, renewable energy environments, and others), energy extraction environments (such as mining, drilling, and the like), construction environments (such as for construction of large buildings), and others, involve highly complex machines, devices and systems and highly complex workflows, in which operators must account for a host of parameters, metrics, and the like in order to optimize design, development, deployment, and operation of different technologies in order to improve overall results. Historically, data has been collected in heavy industrial environments by human beings using dedicated data collectors, often recording batches of specific sensor data on media, such as tape or a hard drive, for later analysis. Batches of data have historically been returned to a central office for analysis, such as undertaking signal processing or other analysis on the data collected by various sensors, after which analysis can be used as a basis for diagnosing problems in an environment and/or suggesting ways to improve operations. This work has historically taken place on a time scale of weeks or months, and has been directed to limited data sets.

**[0004]** The emergence of the Internet of Things (IoT) has made it possible to connect continuously to, and among, a much wider range of devices. Most such devices are consumer devices, such as lights, thermostats, and the like. More complex industrial environments remain more difficult, as the range of available data is often limited, and the complexity of dealing with data from multiple sensors makes it much more difficult to produce "smart" solutions that are effective for the industrial sector. A need exists for improved methods and systems for data collection in industrial environments, as well as for improved methods and systems for using collected data to provide improved monitoring, control, intelligent diagnosis of problems and intelligent optimization of operations in various heavy industrial environments.

**[0005]** Industrial system in various environments have a number of challenges to utilizing data from a multiplicity of sensors. Many industrial systems have a wide range of computing resources and network capabilities at a location at a given time, for example as parts of the system are upgraded or replaced on varying time scales, as mobile equipment enters or leaves a location, and due to the capital costs and risks of upgrading equipment. Additionally, many industrial systems are positioned in challenging environments, where network connectivity can be variable, where a number of noise sources such as vibrational noise and electro-magnetic (EM) noise sources can be significant an in varied locations, and with portions of the system having high pressure, high noise, high temperature, and corrosive materials. Many industrial processes are subject to high variability in process operating parameters and non-linear responses to off-nominal operations. Accordingly, sensing requirements for industrial processes can vary with time, operating stages of a process, age and degradation of equipment, and operating conditions. Previously known industrial processes suffer from sensing configurations that are conservative, detecting many parameters that are not needed during most operations of the industrial system, or that accept risk in the process, and do not detect parameters that are only occasionally utilized in characterizing the system. Further, previously known industrial systems are not flexible to configuring sensed parameters rapidly and in real-time, and in managing system variance such as intermittent network availability. Industrial systems often use similar components across systems such as pumps, mixers, tanks, and fans. However, previously known industrial systems do not have a mechanism to leverage data from similar components that may be used in a different type of process, and/or that may be unavailable due to competitive concerns. Additionally, previously known industrial systems do not integrate data from offset systems into the sensor plan and execution in real time.

## SUMMARY

**[0006]** In embodiments, a monitoring system for data collection in an industrial drilling environment may comprise a data collector communicatively coupled to a plurality of input channels, wherein a subset of the plurality of input channels are communicatively coupled to sensors measuring operational parameters from an industrial drilling component; a data storage structured to store a plurality of collector routes and collected data that correspond to the plurality of input channels, wherein the plurality of collector routes each comprise a different data collection routine; a data acquisition circuit structured to interpret a plurality of detection values from the collected data, each of the plurality of detection values corresponding to at least one of the plurality of input channels; a data analysis circuit structured to analyze the collected data from the plurality of input channels to detect an anomalous condition associated with the industrial drilling component; and a data response circuit structured to switch one of the data collection routines from a first data collection routine to a second collection routine based on the detection of the anomalous condition. In embodiments, the anomalous condition may be a pre-failure mode condition for the industrial drilling component. The second collection routine may include data collector input channels coupled to sensors measuring additional operational parameters from the industrial drilling component relative to the first data collection routine. One of the plurality of input channels may be connected to a tri-axial sensor connected to multiple input channels for monitoring different positions associated with the industrial drilling component. One of the plurality of input channels may provide for a gap-free digital waveform from which the data analysis circuit detects the anomalous condition. The data analysis circuit may be further structured to analyze at least two of the plurality of input channels, to determine a relative phase value between the at least two of the plurality of input channels, and to detect the anomalous condition in response to the relative phase difference. The industrial drilling component may include a rotating component, where the data analysis circuit may be further structured to perform band-pass tracking associated with the rotating component to detect the anomalous condition. The data collector may include at least one delta-sigma analog-to-digital converter that is configured to increase input oversampling rates. The industrial drilling component may include a rotating component, the system further comprising a frequency evaluation circuit structured to detect a signal on one of the plurality of input channels at frequencies higher than a frequency at which the rotating component rotates. The data analysis circuit may be further structured to utilize a neural network model to detect the anomalous condition. The neural network model may be a probabilistic neural network that predicts a fault condition for the industrial drilling component. The neural network model may be a time delay neural network trained on data collected over time from the plurality of input channels. The neural network model may be a convolutional neural network which provides a recommended route change for the data collector based on the data collected from the plurality of input channels, and wherein the data response circuit is further structured to adjust one of the collector routes in response to the recommended route change.

**[0007]** In embodiments, a computer-implemented method for monitoring an industrial drilling environment may comprise collecting data from a plurality of input channels, wherein a subset of the plurality of input channels are communicatively coupled to sensors measuring operational parameters from an industrial drilling component; accessing a plurality of collector routes on a data storage, and storing the collected data on the data storage, wherein the plurality of collector routes each comprise a different data collection routine; interpreting a plurality of detection values from the collected data, each of the plurality of detection values corresponding to at least one of the plurality of input channels; analyzing the collected data to detect an anomalous condition associated with the industrial drilling component; and switching from a first data collection routine to a second collection routine based on the detection of the anomalous condition. In embodiments, the anomalous condition may be a pre-failure mode condition for the industrial drilling component, and wherein the switching increases data monitoring of the industrial drilling component. Detecting the anomalous condition may include determining a relative phase difference between the detection values interpreted from two of the plurality of input channels. The industrial drilling component may include a rotating component, where detecting the anomalous condition includes a performing a frequency analysis at a selected multiple of a rotational speed of the rotating component.

**[0008]** In embodiments, a monitoring apparatus for data collection in an industrial drilling environment may comprise a data collector component communicatively coupled to a plurality of input channels, wherein a subset of the plurality of input channels are communicatively coupled to sensors measuring operational parameters from an industrial drilling component; a data storage component structured to store a plurality of collector routes and collected data that correspond to the plurality of input channels, wherein the plurality of collector routes each comprise a different data collection routine; a data acquisition component structured to interpret a plurality of detection values from the collected data, each of the plurality of detection values corresponding to at least one of the plurality of input channels; a data analysis component structured to analyze the collected data from the plurality of input channels to detect an anomalous condition associated with one of the plurality of industrial drilling components; and a data response circuit structured to adjust at least one of the data collection routines based on the detection of the anomalous condition. In embodiments, the data response circuit may be further structured to adjust the at least one of the data collection routines by changing at least one of: the collected data such that different sensors are utilized to monitor the industrial drilling component; and sensor configuration values such that operational parameters of the sensors monitoring the industrial drilling component are changed. The anomalous condition may include a reduced operating capability of the industrial drilling component, and wherein the data response circuit is further structured to provide a drilling process adjustment to reduce a work load of the industrial drilling component.

**[0009]** Methods and systems are provided herein for data collection in industrial environments, as well as for improved methods and systems for using collected data to provide improved monitoring, control, and intelligent diagnosis of problems and intelligent optimization of operations in various heavy industrial environments. These methods and systems include methods, systems, components, devices, workflows, services, processes, and the like that are

deployed in various configurations and locations, such as: (a) at the "edge" of the Internet of Things, such as in the local environment of a heavy industrial machine; (b) in data transport networks that move data between local environments of heavy industrial machines and other environments, such as of other machines or of remote controllers, such as enterprises that own or operate the machines or the facilities in which the machines are operated; and (c) in locations where facilities are deployed to control machines or their environments, such as cloud-computing environments and on-premises computing environments of enterprises that own or control heavy industrial environments or the machines, devices or systems deployed in them. These methods and systems include a range of ways for providing improved data include a range of methods and systems for providing improved data collection, as well as methods and systems for deploying increased intelligence at the edge, in the network, and in the cloud or premises of the controller of an industrial environment.

**[0010]** Methods and systems are disclosed herein for continuous ultrasonic monitoring, including providing continuous ultrasonic monitoring of rotating elements and bearings of an energy production facility; for cloud-based systems including machine pattern recognition based on the fusion of remote, analog industrial sensors or machine pattern analysis of state information from multiple analog industrial sensors to provide anticipated state information for an industrial system; for on-device sensor fusion and data storage for industrial IoT devices, including on-device sensor fusion and data storage for an Industrial IoT device, where data from multiple sensors are multiplexed at the device for storage of a fused data stream; and for self-organizing systems including a self-organizing data marketplace for industrial IoT data, including a self-organizing data marketplace for industrial IoT data, where available data elements are organized in the marketplace for consumption by consumers based on training a self-organizing facility with a training set and feedback from measures of marketplace success, for self-organizing data pools, including self-organization of data pools based on utilization and/or yield metrics, including utilization and/or yield metrics that are tracked for a plurality of data pools, a self-organized swarm of industrial data collectors, including a self-organizing swarm of industrial data collectors that organize among themselves to optimize data collection based on the capabilities and conditions of the members of the swarm, a self-organizing collector, including a self-organizing, multi-sensor data collector that can optimize data collection, power and/or yield based on conditions in its environment, a self-organizing storage for a multi-sensor data collector, including self-organizing storage for a multi-sensor data collector for industrial sensor data, a self-organizing network coding for a multi-sensor data network, including self-organizing network coding for a data network that transports data from multiple sensors in an industrial data collection environment.

**[0011]** Methods and systems are disclosed herein for training artificial intelligence ("AI") models based on industry-specific feedback, including training an AI model based on industry-specific feedback that reflects a measure of utilization, yield, or impact, where the AI model operates on sensor data from an industrial environment; for an industrial IoT distributed ledger, including a distributed ledger supporting the tracking of transactions executed in an automated data marketplace for industrial IoT data; for a network-sensitive collector, including a network condition-sensitive, self-organizing, multi-sensor data collector that can optimize based on bandwidth, quality of service, pricing, and/or other network conditions; for a remotely organized universal data collector that can power up and down sensor interfaces based on need and/or conditions identified in an industrial data collection environment; and for a haptic or multisensory user interface, including a wearable haptic or multisensory user interface for an industrial sensor data collector, with vibration, heat, electrical, and/or sound outputs.

**[0012]** Methods and systems are disclosed herein for a presentation layer for augmented reality and virtual reality (AR/VR) industrial glasses, where heat map elements are presented based on patterns and/or parameters in collected data; and for condition-sensitive, self-organized tuning of AR/VR interfaces based on feedback metrics and/or training in industrial environments.

**[0013]** In embodiments, a system for data collection, processing, and utilization of signals from at least a first element in a first machine in an industrial environment includes a platform including a computing environment connected to a local data collection system having at least a first sensor signal and a second sensor signal obtained from at least the first machine in the industrial environment. The system includes a first sensor in the local data collection system configured to be connected to the first machine and a second sensor in the local data collection system. The system further includes a crosspoint switch in the local data collection system having multiple inputs and multiple outputs including a first input connected to the first sensor and a second input connected to the second sensor. Throughout the present disclosure, wherever a crosspoint switch, multiplexer (MUX) device, or other multiple-input multiple-output data collection or communication device is described, any multi-sensor acquisition device is also contemplated herein. In certain embodiments, a multi-sensor acquisition device includes one or more channels configured for, or compatible with, an analog sensor input. The multiple outputs include a first output and second output configured to be switchable between a condition in which the first output is configured to switch between delivery of the first sensor signal and the second sensor signal and a condition in which there is simultaneous delivery of the first sensor signal from the first output and the second sensor signal from the second output. Each of multiple inputs is configured to be individually assigned to any of the multiple outputs, or combined in any subsets of the inputs to the outputs. Unassigned outputs are configured to be switched off, for example by producing a high-impedance state.

**[0014]** In embodiments, the first sensor signal and the second sensor signal are continuous vibration data about the industrial environment. In embodiments, the second sensor in the local data collection system is configured to be connected to the first machine. In embodiments, the second sensor in the local data collection system is configured to be connected to a second machine in the industrial environment. In embodiments, the computing environment of the platform is configured to compare relative phases of the first and second sensor signals. In embodiments, the first sensor is a single-axis sensor and the second sensor is a three-axis sensor. In embodiments, at least one of the multiple inputs of the crosspoint switch includes internet protocol, front-end signal conditioning, for improved signal-to-noise ratio. In

embodiments, the crosspoint switch includes a third input that is configured with a continuously monitored alarm having a pre-determined trigger condition when the third input is unassigned to or undetected at any of the multiple outputs.

**[0015]** In embodiments, the local data collection system includes multiple multiplexing units and multiple data acquisition units receiving multiple data streams from multiple machines in the industrial environment. In embodiments, the local data collection system includes distributed complex programmable hardware device ("CPLD") chips each dedicated to a data bus for logic control of the multiple multiplexing units and the multiple data acquisition units that receive the multiple data streams from the multiple machines in the industrial environment. In embodiments, the local data collection system is configured to provide high-amperage input capability using solid state relays. In embodiments, the local data collection system is configured to power-down at least one of an analog sensor channel and a component board.

**[0016]** In embodiments, the local data collection system includes a phase-lock loop band-pass tracking filter configured to obtain slow-speed revolutions per minute ("RPMs") and phase information. In embodiments, the local data collection system is configured to digitally derive phase using on-board timers relative to at least one trigger channel and at least one of the multiple inputs. In embodiments, the local data collection system includes a peak-detector configured to autoscale using a separate analog-to-digital converter for peak detection. In embodiments, the local data collection system is configured to route at least one trigger channel that is raw and buffered into at least one of the multiple inputs. In embodiments, the local data collection system includes at least one delta-sigma analog-to-digital converter that is configured to increase input oversampling rates to reduce sampling rate outputs and to minimize anti-aliasing filter requirements. In embodiments, the distributed CPLD chips each dedicated to the data bus for logic control of the multiple multiplexing units and the multiple data acquisition units includes as high-frequency crystal clock reference configured to be divided by at least one of the distributed CPLD chips for at least one delta-sigma analog-to-digital converter to achieve lower sampling rates without digital resampling.

**[0017]** In embodiments, the local data collection system is configured to obtain long blocks of data at a single relatively high-sampling rate as opposed to multiple sets of data taken at different sampling rates. In embodiments, the single relatively high-sampling rate corresponds to a maximum frequency of about forty kilohertz. In embodiments, the long blocks of data are for a duration that is in excess of one minute. In embodiments, the local data collection system includes multiple data acquisition units each having an onboard card set configured to store calibration information and maintenance history of a data acquisition unit in which the onboard card set is located. In embodiments, the local data collection system is configured to plan data acquisition routes based on hierarchical templates.

**[0018]** In embodiments, the local data collection system is configured to manage data collection bands. In embodiments, the data collection bands define a specific frequency band and at least one of a group of spectral peaks, a true-peak level, a crest factor derived from a time waveform, and an overall waveform derived from a vibration envelope. In embodiments, the local data collection system includes a neural net expert system using intelligent management of the data collection bands. In embodiments, the local data collection system is configured to create data acquisition routes based on hierarchical templates that each include the data collection bands related to machines associated with the data acquisition routes. In embodiments, at least one of the hierarchical templates is associated with multiple interconnected elements of the first machine. In embodiments, at least one of the hierarchical templates is associated with similar elements associated with at least the first machine and a second machine. In embodiments, at least one of the hierarchical templates is associated with at least the first machine being proximate in location to a second machine.

**[0019]** In embodiments, the local data collection system includes a graphical user interface ("GUI") system configured to manage the data collection bands. In embodiments, the GUI system includes an expert system diagnostic tool. In embodiments, the platform includes cloud-based, machine pattern analysis of state information from multiple sensors to provide anticipated state information for the industrial environment. In embodiments, the platform is configured to provide self-organization of data pools based on at least one of the utilization metrics and yield metrics. In embodiments, the platform includes a self-organized swarm of industrial data collectors. In embodiments, the local data collection system includes a wearable haptic user interface for an industrial sensor data collector with at least one of vibration, heat, electrical, and sound outputs.

**[0020]** In embodiments, multiple inputs of the crosspoint switch include a third input connected to the second sensor and a fourth input connected to the second sensor. The first sensor signal is from a single-axis sensor at an unchanging location associated with the first machine. In embodiments, the second sensor is a three-axis sensor. In embodiments, the local data collection system is configured to record gap-free digital waveform data simultaneously from at least the first input, the second input, the third input, and the fourth input. In embodiments, the platform is configured to determine a change in relative phase based on the simultaneously recorded gap-free digital waveform data. In embodiments, the second sensor is configured to be movable to a plurality of positions associated with the first machine while obtaining the simultaneously recorded gap-free digital waveform data. In embodiments, multiple outputs of the crosspoint switch include a third output and fourth output. The second, third, and fourth outputs are assigned together to a sequence of tri-axial sensors each located at different positions associated with the machine. In embodiments, the platform is configured to determine an operating deflection shape based on the change in relative phase and the simultaneously recorded gap-free digital waveform data.

**[0021]** In embodiments, the unchanging location is a position associated with the rotating shaft of the first machine. In embodiments, tri-axial sensors in the sequence of the tri-axial sensors are each located at different positions on the first machine but are each associated with different bearings in the machine. In embodiments, tri-axial sensors in the sequence of the tri-axial sensors are each located at similar positions associated with similar bearings but are each associated with different machines. In embodiments, the local data collection system is configured to obtain the simultaneously recorded gap-free digital waveform data from the first machine while the first machine and a second

machine are both in operation. In embodiments, the local data collection system is configured to characterize a contribution from the first machine and the second machine in the simultaneously recorded gap-free digital waveform data from the first machine. In embodiments, the simultaneously recorded gap-free digital waveform data has a duration that is in excess of one minute.

**[0022]** In embodiments, a method of monitoring a machine having at least one shaft supported by a set of bearings includes monitoring a first data channel assigned to a single-axis sensor at an unchanging location associated with the machine. The method includes monitoring second, third, and fourth data channels each assigned to an axis of a three-axis sensor. The method includes recording gap-free digital waveform data simultaneously from all of the data channels while the machine is in operation and determining a change in relative phase based on the digital waveform data.

**[0023]** In embodiments, the tri-axial sensor is located at a plurality of positions associated with the machine while obtaining the digital waveform. In embodiments, the second, third, and fourth channels are assigned together to a sequence of tri-axial sensors each located at different positions associated with the machine. In embodiments, the data is received from all of the sensors simultaneously. In embodiments, the method includes determining an operating deflection shape based on the change in relative phase information and the waveform data. In embodiments, the unchanging location is a position associated with the shaft of the machine. In embodiments, the tri-axial sensors in the sequence of the tri-axial sensors are each located at different positions and are each associated with different bearings in the machine. In embodiments, the unchanging location is a position associated with the shaft of the machine. The tri-axial sensors in the sequence of the tri-axial sensors are each located at different positions and are each associated with different bearings that support the shaft in the machine.

**[0024]** In embodiments, the method includes monitoring the first data channel assigned to the single-axis sensor at an unchanging location located on a second machine. The method includes monitoring the second, the third, and the fourth data channels, each assigned to the axis of a three-axis sensor that is located at the position associated with the second machine. The method also includes recording gap-free digital waveform data simultaneously from all of the data channels from the second machine while both of the machines are in operation. In embodiments, the method includes characterizing the contribution from each of the machines in the gap-free digital waveform data simultaneously from the second machine.

**[0025]** In embodiments, a method for data collection, processing, and utilization of signals with a platform monitoring at least a first element in a first machine in an industrial environment includes obtaining, automatically with a computing environment, at least a first sensor signal and a second sensor signal with a local data collection system that monitors at least the first machine. The method includes connecting a first input of a crosspoint switch of the local data collection system to a first sensor and a second input of the crosspoint switch to a second sensor in the local data collection system. The method includes switching between a condition in which a first output of the crosspoint switch alternates between delivery of at least the first sensor signal and the second sensor signal and a condition in which there is simultaneous delivery of the first sensor signal from the first output and the second sensor signal from a second output of the crosspoint switch. The method also includes switching off unassigned outputs of the crosspoint switch into a high-impedance state.

**[0026]** In embodiments, the first sensor signal and the second sensor signal are continuous vibration data from the industrial environment. In embodiments, the second sensor in the local data collection system is connected to the first machine. In embodiments, the second sensor in the local data collection system is connected to a second machine in the industrial environment. In embodiments, the method includes comparing, automatically with the computing environment, relative phases of the first and second sensor signals. In embodiments, the first sensor is a single-axis sensor and the second sensor is a three-axis sensor. In embodiments, at least the first input of the crosspoint switch includes internet protocol front-end signal conditioning for improved signal-to-noise ratio.

**[0027]** In embodiments, the method includes continuously monitoring at least a third input of the crosspoint switch with an alarm having a pre-determined trigger condition when the third input is unassigned to any of multiple outputs on the crosspoint switch. In embodiments, the local data collection system includes multiple multiplexing units and multiple data acquisition units receiving multiple data streams from multiple machines in the industrial environment. In embodiments, the local data collection system includes distributed CPLD chips each dedicated to a data bus for logic control of the multiple multiplexing units and the multiple data acquisition units that receive the multiple data streams from the multiple machines in the industrial environment. In embodiments, the local data collection system provides high-amperage input capability using solid state relays.

**[0028]** In embodiments, the method includes powering down at least one of an analog sensor channel and a component board of the local data collection system. In embodiments, the local data collection system includes an external voltage reference for an A/D zero reference that is independent of the voltage of the first sensor and the second sensor. In embodiments, the local data collection system includes a phase-lock loop band-pass tracking filter that obtains slow-speed RPMs and phase information. In embodiments, the method includes digitally deriving phase using on-board timers relative to at least one trigger channel and at least one of multiple inputs on the crosspoint switch.

**[0029]** In embodiments, the method includes auto-scaling with a peak-detector using a separate analog-to-digital converter for peak detection. In embodiments, the method includes routing at least one trigger channel that is raw and buffered into at least one of multiple inputs on the crosspoint switch. In embodiments, the method includes increasing input oversampling rates with at least one delta-sigma analog-to-digital converter to reduce sampling rate outputs and to minimize anti-aliasing filter requirements. In embodiments, the distributed CPLD chips are each dedicated to the data bus for logic control of the multiple multiplexing units and the multiple data acquisition units and each include a high-frequency crystal clock reference divided by at least one of the distributed CPLD chips for at least one delta-sigma analog-to-digital converter to achieve lower sampling rates without digital resampling. In embodiments, the method includes obtaining long blocks of data at a single relatively high-sampling rate with the local data collection

system as opposed to multiple sets of data taken at different sampling rates. In embodiments, the single relatively high-sampling rate corresponds to a maximum frequency of about forty kilohertz. In embodiments, the long blocks of data are for a duration that is in excess of one minute. In embodiments, the local data collection system includes multiple data acquisition units and each data acquisition unit has an onboard card set that stores calibration information and maintenance history of a data acquisition unit in which the onboard card set is located.

**[0030]** In embodiments, the method includes planning data acquisition routes based on hierarchical templates associated with at least the first element in the first machine in the industrial environment. In embodiments, the local data collection system manages data collection bands that define a specific frequency band and at least one of a group of spectral peaks, a true-peak level, a crest factor derived from a time waveform, and an overall waveform derived from a vibration envelope. In embodiments, the local data collection system includes a neural net expert system using intelligent management of the data collection bands. In embodiments, the local data collection system creates data acquisition routes based on hierarchical templates that each include the data collection bands related to machines associated with the data acquisition routes. In embodiments, at least one of the hierarchical templates is associated with multiple interconnected elements of the first machine. In embodiments, at least one of the hierarchical templates is associated with similar elements associated with at least the first machine and a second machine. In embodiments, at least one of the hierarchical templates is associated with at least the first machine being proximate in location to a second machine.

**[0031]** In embodiments, the method includes controlling a GUI system of the local data collection system to manage the data collection bands. The GUI system includes an expert system diagnostic tool. In embodiments, the computing environment of the platform includes cloud-based, machine pattern analysis of state information from multiple sensors to provide anticipated state information for the industrial environment. In embodiments, the computing environment of the platform provides self-organization of data pools based on at least one of the utilization metrics and yield metrics. In embodiments, the computing environment of the platform includes a self-organized swarm of industrial data collectors. In embodiments, each of multiple inputs of the crosspoint switch is individually assignable to any of multiple outputs of the crosspoint switch.

**[0032]** Methods and systems described herein for industrial machine sensor data streaming, collection, processing, and storage may be configured to operate and integrate with existing data collection, processing and storage systems and may include a method for capturing a plurality of streams of sensed data from sensors deployed to monitor aspects of an industrial machine associated with at least one moving part of the machine; at least one of the streams contains a plurality of frequencies of data. The method may include identifying a subset of data in at least one of the plurality of streams that corresponds to data representing at least one predefined frequency. The at least one predefined frequency is represented by a set of data collected from alternate sensors deployed to monitor aspects of the industrial machine associated with the at least one moving part of the machine. The method may further include processing the identified data with a data processing facility that processes the identified data with an algorithm configured to be applied to the set of data collected from alternate sensors. Lastly, the method may include storing the at least one of the streams of data, the identified subset of data, and a result of processing the identified data in an electronic data set.

**[0033]** Methods and systems described herein for industrial machine sensor data streaming, collection, processing, and storage may be configured to operate and integrate with existing data collection, processing, and storage systems and may include a method for applying data captured from sensors deployed to monitor aspects of an industrial machine associated with at least one moving part of the machine. The data is captured with predefined lines of resolution covering a predefined frequency range and is sent to a frequency matching facility that identifies a subset of data streamed from other sensors deployed to monitor aspects of the industrial machine associated with at least one moving part of the machine. The streamed data includes a plurality of lines of resolution and frequency ranges. The subset of data identified corresponds to the lines of resolution and predefined frequency range. This method may include storing the subset of data in an electronic data record in a format that corresponds to a format of the data captured with predefined lines of resolution and signaling to a data processing facility the presence of the stored subset of data. This method may, optionally, include processing the subset of data with at least one set of algorithms, models and pattern recognizers that corresponds to algorithms, models and pattern recognizers associated with processing the data captured with predefined lines of resolution covering a predefined frequency range.

**[0034]** Methods and systems described herein for industrial machine sensor data streaming, collection, processing, and storage may be configured to operate and integrate with existing data collection, processing and storage systems and may include a method for identifying a subset of streamed sensor data, the sensor data captured from sensors deployed to monitor aspects of an industrial machine associated with at least one moving part of the machine, the subset of streamed sensor data at predefined lines of resolution for a predefined frequency range, and establishing a first logical route for communicating electronically between a first computing facility performing the identifying and a second computing facility, wherein identified subset of the streamed sensor data is communicated exclusively over the established first logical route when communicating the subset of streamed sensor data from the first facility to the second facility. This method may further include establishing a second logical route for communicating electronically between the first computing facility and the second computing facility for at least one portion of the streamed sensor data that is not the identified subset. Additionally, this method may further include establishing a third logical route for communicating electronically between the first computing facility and the second computing facility for at least one portion of the streamed sensor data that includes the identified subset and at least one other portion of the data not represented by the identified subset.

**[0035]** Methods and systems described herein for industrial machine sensor data streaming, collection, processing, and storage may be configured to operate and integrate with existing data collection, processing and storage systems and may include a first data sensing and processing system that captures first data from a first set of sensors deployed to

monitor aspects of an industrial machine associated with at least one moving part of the machine, the first data covering a set of lines of resolution and a frequency range. This system may include a second data sensing and processing system that captures and streams a second set of data from a second set of sensors deployed to monitor aspects of the industrial machine associated with at least one moving part of the machine, the second data covering a plurality of lines of resolution that includes the set of lines of resolution and a plurality of frequencies that includes the frequency range. The system may enable selecting a portion of the second data that corresponds to the set of lines of resolution and the frequency range of the first data, and processing the selected portion of the second data with the first data sensing and processing system.

**[0036]** Methods and systems described herein for industrial machine sensor data streaming, collection, processing, and storage may be configured to operate and integrate with existing data collection, processing and storage systems and may include a method for automatically processing a portion of a stream of sensed data. The sensed data is received from a first set of sensors deployed to monitor aspects of an industrial machine associated with at least one moving part of the machine. The sensed data is in response to an electronic data structure that facilitates extracting a subset of the stream of sensed data that corresponds to a set of sensed data received from a second set of sensors deployed to monitor the aspects of the industrial machine associated with the at least one moving part of the machine. The set of sensed data is constrained to a frequency range. The stream of sensed data includes a range of frequencies that exceeds the frequency range of the set of sensed data, the processing comprising executing an algorithm on a portion of the stream of sensed data that is constrained to the frequency range of the set of sensed data, the algorithm configured to process the set of sensed data.

**[0037]** Methods and systems described herein for industrial machine sensor data streaming, collection, processing, and storage may be configured to operate and integrate with existing data collection, processing and storage systems and may include a method for receiving first data from sensors deployed to monitor aspects of an industrial machine associated with at least one moving part of the machine. This method may further include detecting at least one of a frequency range and lines of resolution represented by the first data; receiving a stream of data from sensors deployed to monitor the aspects of the industrial machine associated with the at least one moving part of the machine. The stream of data includes: (1) a plurality of frequency ranges and a plurality of lines of resolution that exceeds the frequency range and the lines of resolution represented by the first data; (2) a set of data extracted from the stream of data that corresponds to at least one of the frequency range and the lines of resolution represented by the first data; and (3) the extracted set of data which is processed with a data processing algorithm that is configured to process data within the frequency range and within the lines of resolution of the first data.

## BRIEF DESCRIPTION OF THE FIGURES

**[0038]** FIG. **1** through FIG. **5** are diagrammatic views that each depicts portions of an overall view of an industrial Internet of Things (IoT) data collection, monitoring and control system in accordance with the present disclosure.

**[0039]** FIG. **6** is a diagrammatic view of a platform including a local data collection system disposed in an industrial environment for collecting data from or about the elements of the environment, such as machines, components, systems, sub-systems, ambient conditions, states, workflows, processes, and other elements in accordance with the present disclosure.

**[0040]** FIG. **7** is a diagrammatic view that depicts elements of an industrial data collection system for collecting analog sensor data in an industrial environment in accordance with the present disclosure.

**[0041]** FIG. **8** is a diagrammatic view of a rotating or oscillating machine having a data acquisition module that is configured to collect waveform data in accordance with the present disclosure.

**[0042]** FIG. **9** is a diagrammatic view of an exemplary tri-axial sensor mounted to a motor bearing of an exemplary rotating machine in accordance with the present disclosure.

**[0043]** FIG. **10** and FIG. **11** are diagrammatic views of an exemplary tri-axial sensor and a single-axis sensor mounted to an exemplary rotating machine in accordance with the present disclosure.

**[0044]** FIG. **12** is a diagrammatic view of multiple machines under survey with ensembles of sensors in accordance with the present disclosure.

**[0045]** FIG. **13** is a diagrammatic view of hybrid relational metadata and a binary storage approach in accordance with the present disclosure.

**[0046]** FIG. **14** is a diagrammatic view of components and interactions of a data collection architecture involving application of cognitive and machine learning systems to data collection and processing in accordance with the present disclosure.

**[0047]** FIG. **15** is a diagrammatic view of components and interactions of a data collection architecture involving application of a platform having a cognitive data marketplace in accordance with the present disclosure.

**[0048]** FIG. **16** is a diagrammatic view of components and interactions of a data collection architecture involving application of a self-organizing swarm of data collectors in accordance with the present disclosure.

**[0049]** FIG. **17** is a diagrammatic view of components and interactions of a data collection architecture involving application of a haptic user interface in accordance with the present disclosure.

**[0050]** FIG. **18** is a diagrammatic view of a multi-format streaming data collection system in accordance with the present disclosure.

**[0051]** FIG. **19** is a diagrammatic view of combining legacy and streaming data collection and storage in accordance with the present disclosure.

**[0052]** FIG. **20** is a diagrammatic view of industrial machine sensing using both legacy and updated streamed sensor data processing in accordance with the present disclosure.

**[0053]** FIG. **21** is a diagrammatic view of an industrial machine sensed data processing system that facilitates portal algorithm use and alignment of legacy and streamed sensor data in accordance with the present disclosure.

**[0054]** FIG. **22** is a diagrammatic view of components and interactions of a data collection architecture involving a streaming data acquisition instrument receiving analog sen-

sor signals from an industrial environment connected to a cloud network facility in accordance with the present disclosure.

**[0055]** FIG. **23** is a diagrammatic view of components and interactions of a data collection architecture involving a streaming data acquisition instrument having an alarms module, expert analysis module, and a driver API to facilitate communication with a cloud network facility in accordance with the present disclosure.

**[0056]** FIG. **24** is a diagrammatic view of components and interactions of a data collection architecture involving a streaming data acquisition instrument and first in, first out memory architecture to provide a real time operating system in accordance with the present disclosure.

**[0057]** FIG. **25** through FIG. **30** are diagrammatic views of screens showing four analog sensor signals, transfer functions between the signals, analysis of each signal, and operating controls to move and edit throughout the streaming signals obtained from the sensors in accordance with the present disclosure.

**[0058]** FIG. **31** is a diagrammatic view of components and interactions of a data collection architecture involving a multiple streaming data acquisition instrument receiving analog sensor signals and digitizing those signals to be obtained by a streaming hub server in accordance with the present disclosure.

**[0059]** FIG. **32** is a diagrammatic view of components and interactions of a data collection architecture involving a master raw data server that processes new streaming data and data already extracted and processed in accordance with the present disclosure.

**[0060]** FIG. **33**, FIG. **34**, and FIG. **35** are diagrammatic views of components and interactions of a data collection architecture involving a processing, analysis, report, and archiving server that processes new streaming data and data already extracted and processed in accordance with the present disclosure.

**[0061]** FIG. **36** is a diagrammatic view of components and interactions of a data collection architecture involving a relation database server and data archives and their connectivity with a cloud network facility in accordance with the present disclosure.

**[0062]** FIG. **37** through FIG. **42** are diagrammatic views of components and interactions of a data collection architecture involving a virtual streaming data acquisition instrument receiving analog sensor signals from an industrial environment connected to a cloud network facility in accordance with the present disclosure.

**[0063]** FIG. **43** through FIG. **50** are diagrammatic views of components and interactions of a data collection architecture involving data channel methods and systems for data collection of industrial machines in accordance with the present disclosure.

**[0064]** FIG. **51** is a diagrammatic view that depicts embodiments of a data monitoring device in accordance with the present disclosure.

**[0065]** FIG. **52** and FIG. **53** are diagrammatic views that depict embodiments of a data monitoring device in accordance with the present disclosure.

**[0066]** FIG. **54** is a diagrammatic view that depicts embodiments of a data monitoring device in accordance with the present disclosure.

**[0067]** FIGS. **55** and **56** are diagrammatic views that depict an embodiment of a system for data collection in accordance with the present disclosure.

**[0068]** FIGS. **57** and **58** are diagrammatic views that depict an embodiment of a system for data collection comprising a plurality of data monitoring devices in accordance with the present disclosure.

**[0069]** FIG. **59** depicts an embodiment of a data monitoring device incorporating sensors in accordance with the present disclosure.

**[0070]** FIGS. **60** and **61** are diagrammatic views that depict embodiments of a data monitoring device in communication with external sensors in accordance with the present disclosure.

**[0071]** FIG. **62** is a diagrammatic view that depicts embodiments of a data monitoring device with additional detail in the signal evaluation circuit in accordance with the present disclosure.

**[0072]** FIG. **63** is a diagrammatic view that depicts embodiments of a data monitoring device with additional detail in the signal evaluation circuit in accordance with the present disclosure.

**[0073]** FIG. **64** is a diagrammatic view that depicts embodiments of a data monitoring device with additional detail in the signal evaluation circuit in accordance with the present disclosure.

**[0074]** FIG. **65** is a diagrammatic view that depicts embodiments of a system for data collection in accordance with the present disclosure.

**[0075]** FIG. **66** is a diagrammatic view that depicts embodiments of a system for data collection comprising a plurality of data monitoring devices in accordance with the present disclosure.

**[0076]** FIG. **67** is a diagrammatic view that depicts embodiments of a data monitoring device in accordance with the present disclosure.

**[0077]** FIGS. **68** and **69** are diagrammatic views that depict embodiments of a data monitoring device in accordance with the present disclosure.

**[0078]** FIGS. **70** and **71** are diagrammatic views that depict embodiments of a data monitoring device in accordance with the present disclosure.

**[0079]** FIGS. **72** and **73** are diagrammatic views that depict embodiments of a data monitoring device in accordance with the present disclosure.

**[0080]** FIGS. **74** and **75** is a diagrammatic view that depicts embodiments of a system for data collection comprising a plurality of data monitoring devices in accordance with the present disclosure.

**[0081]** FIG. **76** is a diagrammatic view that depicts embodiments of a data monitoring device in accordance with the present disclosure.

**[0082]** FIGS. **77** and **78** are diagrammatic views that depict embodiments of a data monitoring device in accordance with the present disclosure.

**[0083]** FIG. **79** is a diagrammatic view that depicts embodiments of a data monitoring device in accordance with the present disclosure.

**[0084]** FIG. **80** is a diagrammatic view that depicts embodiments of a data monitoring device in accordance with the present disclosure.

**[0085]** FIGS. **81** and **82** are diagrammatic views that depict embodiments of a system for data collection in accordance with the present disclosure.

**[0086]** FIGS. **83** and **84** are diagrammatic views that depict embodiments of a system for data collection comprising a plurality of data monitoring devices in accordance with the present disclosure.

**[0087]** FIG. **85** is a diagrammatic view that depicts embodiments of a data monitoring device in accordance with the present disclosure.

**[0088]** FIGS. **86** and **87** are diagrammatic views that depict embodiments of a data monitoring device in accordance with the present disclosure.

**[0089]** FIG. **88** is a diagrammatic view that depicts embodiments of a data monitoring device in accordance with the present disclosure.

**[0090]** FIGS. **89** and **90** are diagrammatic views that depict embodiments of a system for data collection in accordance with the present disclosure.

**[0091]** FIGS. **91** and **92** are diagrammatic views that depict embodiments of a system for data collection comprising a plurality of data monitoring devices in accordance with the present disclosure.

**[0092]** FIG. **93** is a diagrammatic view that depicts embodiments of a data monitoring device in accordance with the present disclosure.

**[0093]** FIGS. **94** and **95** are diagrammatic views that depict embodiments of a data monitoring device in accordance with the present disclosure.

**[0094]** FIG. **96** is a diagrammatic view that depicts embodiments of a data monitoring device in accordance with the present disclosure.

**[0095]** FIGS. **97** and **98** are diagrammatic views that depict embodiments of a system for data collection in accordance with the present disclosure.

**[0096]** FIGS. **99** and **100** are diagrammatic views that depict embodiments of a system for data collection comprising a plurality of data monitoring devices in accordance with the present disclosure.

**[0097]** FIG. **101** is a diagrammatic view that depicts embodiments of a data monitoring device in accordance with the present disclosure.

**[0098]** FIGS. **102** and **103** are diagrammatic views that depict embodiments of a data monitoring device in accordance with the present disclosure.

**[0099]** FIG. **104** is a diagrammatic view that depicts embodiments of a data monitoring device in accordance with the present disclosure.

**[0100]** FIGS. **105** and **106** are diagrammatic views that depict embodiments of a system for data collection in accordance with the present disclosure.

**[0101]** FIGS. **107** and **108** are diagrammatic views that depict embodiments of a system for data collection comprising a plurality of data monitoring devices in accordance with the present disclosure.

**[0102]** FIG. **109** to FIG. **136** are diagrammatic views of components and interactions of a data collection architecture involving various neural network embodiments interacting with a streaming data acquisition instrument receiving analog sensor signals and an expert analysis module in accordance with the present disclosure.

**[0103]** FIG. **137** through FIG. **139** are diagrammatic views of components and interactions of a data collection architecture involving a collector of route templates and the routing of data collectors in an industrial environment in accordance with the present disclosure.

**[0104]** FIG. **140** is a diagrammatic view that depicts a monitoring system that employs data collection bands in accordance with the present disclosure.

**[0105]** FIG. **141** is a diagrammatic view that depicts a system that employs vibration and other noise in predicting states and outcomes in accordance with the present disclosure.

**[0106]** FIG. **142** is a diagrammatic view that depicts a system for data collection in an industrial environment in accordance with the present disclosure.

**[0107]** FIG. **143** is a diagrammatic view that depicts an apparatus for data collection in an industrial environment in accordance with the present disclosure.

**[0108]** FIG. **144** is a schematic flow diagram of a procedure for data collection in an industrial environment in accordance with the present disclosure.

**[0109]** FIG. **145** is a diagrammatic view that depicts a system for data collection in an industrial environment in accordance with the present disclosure.

**[0110]** FIG. **146** is a diagrammatic view that depicts an apparatus for data collection in an industrial environment in accordance with the present disclosure.

**[0111]** FIG. **147** is a schematic flow diagram of a procedure for data collection in an industrial environment in accordance with the present disclosure.

**[0112]** FIG. **148** is a diagrammatic view that depicts industry-specific feedback in an industrial environment in accordance with the present disclosure.

**[0113]** FIG. **149** is a diagrammatic view that depicts an exemplary user interface for smart band configuration of a system for data collection in an industrial environment is depicted in accordance with the present disclosure.

**[0114]** FIG. **150** is a diagrammatic view that depicts a graphical approach **11300** for back-calculation in accordance with the present disclosure.

**[0115]** FIG. **151** is a diagrammatic view that depicts a wearable haptic user interface device for providing haptic stimuli to a user that is responsive to data collected in an industrial environment by a system adapted to collect data in the industrial environment in accordance with the present disclosure.

**[0116]** FIG. **152** is a diagrammatic view that depicts an augmented reality display of heat maps based on data collected in an industrial environment by a system adapted to collect data in the environment in accordance with the present disclosure.

**[0117]** FIG. **153** is a diagrammatic view that depicts an augmented reality display including real time data overlaying a view of an industrial environment in accordance with the present disclosure.

**[0118]** FIG. **154** is a diagrammatic view that depicts a user interface display and components of a neural net in a graphical user interface in accordance with the present disclosure.

**[0119]** FIG. **155** is a diagrammatic view of components and interactions of a data collection architecture involving swarming data collectors and sensor mesh protocol in an industrial environment in accordance with the present disclosure.

**[0120]** FIG. **156** through FIG. **159** are diagrammatic views mobile sensors platforms in an industrial environment in accordance with the present disclosure.

**[0121]** FIG. **160** is a diagrammatic view of components and interactions of a data collection architecture involving

two mobile sensor platforms inspecting a vehicle during assembly in an industrial environment in accordance with the present disclosure.

**[0122]** FIG. **161** and FIG. **162** are diagrammatic views one of the mobile sensor platforms in an industrial environment in accordance with the present disclosure.

**[0123]** FIG. **163** is a diagrammatic view of components and interactions of a data collection architecture involving two mobile sensor platforms inspecting a turbine engine during assembly in an industrial environment in accordance with the present disclosure.

**[0124]** FIG. **164** is a diagrammatic view that depicts data collection system according to some aspects of the present disclosure.

**[0125]** FIG. **165** is a diagrammatic view that depicts a system for self-organized, network-sensitive data collection in an industrial environment in accordance with the present disclosure.

**[0126]** FIG. **166** is a diagrammatic view that depicts an apparatus for self-organized, network-sensitive data collection in an industrial environment in accordance with the present disclosure.

**[0127]** FIG. **167** is a diagrammatic view that depicts an apparatus for self-organized, network-sensitive data collection in an industrial environment in accordance with the present disclosure.

**[0128]** FIG. **168** is a diagrammatic view that depicts an apparatus for self-organized, network-sensitive data collection in an industrial environment in accordance with the present disclosure.

**[0129]** FIG. **169** and FIG. **170** are diagrammatic views that depict embodiments of transmission conditions in accordance with the present disclosure.

**[0130]** FIG. **171** is a diagrammatic view that depicts embodiments of a sensor data transmission protocol in accordance with the present disclosure.

**[0131]** FIG. **172** and FIG. **173** are diagrammatic views that depict embodiments of benchmarking data in accordance with the present disclosure.

**[0132]** FIG. **174** is a diagrammatic view that depicts embodiments of a system for data collection and storage in an industrial environment in accordance with the present disclosure.

**[0133]** FIG. **175** is a diagrammatic view that depicts embodiments of an apparatus for self-organizing storage for data collection for an industrial system in accordance with the present disclosure.

**[0134]** FIG. **176** is a diagrammatic view that depicts embodiments of a storage time definition in accordance with the present disclosure.

**[0135]** FIG. **177** is a diagrammatic view that depicts embodiments of a data resolution description in accordance with the present disclosure.

**[0136]** FIG. **178** and FIG. **179** diagrammatic views of an apparatus for self-organizing network coding for data collection for an industrial system in accordance with the present disclosure.

**[0137]** FIG. **180** and FIG. **181** diagrammatic views of data marketplace interacting with data collection in an industrial system in accordance with the present disclosure.

**[0138]** FIG. **182** is a diagrammatic view that depicts a smart heating system as an element in a network for in an industrial Internet of Things ecosystem in accordance with the present disclosure.

**[0139]** FIG. **183** is a schematic of a data network including server and client nodes coupled by intermediate networks.

**[0140]** FIG. **184** is a block diagram illustrating the modules that implement TCP-based communication between a client node and a server node.

**[0141]** FIG. **185** is a block diagram illustrating the modules that implement Packet Coding Transmission Communication Protocol (PC-TCP) based communication between a client node and a server node.

**[0142]** FIG. **186** is a schematic diagram of a use of the PC-TCP based communication between a server and a module device on a cellular network.

**[0143]** FIG. **187** is a block diagram of 1 PC-TCP module that uses a conventional UDP module.

**[0144]** FIG. **188** is a block diagram of a PC-TCP module that is partially integrated into a client application and partially implemented using a conventional UDP module.

**[0145]** FIG. **189** is a block diagram or a PC-TCP module that is split with user space and kernel space components.

**[0146]** FIG. **190** is a block diagram for a proxy architecture.

**[0147]** FIG. **191** is a block diagram of a PC-TCP based proxy architecture in which a proxy node communicates using both PC-TCP and conventional TCP.

**[0148]** FIG. **192** is a block diagram of a PC-TCP proxy-based architecture embodied using a gateway device.

**[0149]** FIG. **193** is a block diagram of an alternative proxy architecture embodied within a client node.

**[0150]** FIG. **194** is a block diagram of a second PC-TCP based proxy architecture in which a proxy node communicates using both PC-TCP and conventional TCP.

**[0151]** FIG. **195** is a block diagram of a PC-TCP proxy-based architecture embodied using a wireless access device.

**[0152]** FIG. **196** is a block diagram of a PC-TCP proxy-based architecture embodied cellular network.

**[0153]** FIG. **197** is a block diagram of a PC-TCP proxy-based architecture embodied cable television-based data network.

**[0154]** FIG. **198** is a block diagram of an intermediate proxy that communicates with a client node and with a server node using separate PC-TCP connections.

**[0155]** FIG. **199** is a block diagram of a PC-TCP proxy-based architecture embodied in a network device.

**[0156]** FIG. **200** is a block diagram of an intermediate proxy that recodes communication between a client node and with a server node.

**[0157]** FIGS. **201-202** arc diagrams that illustrates delivery of common content to multiple destinations.

**[0158]** FIGS. **203-213** are schematic diagrams of various embodiments of PC-TCP communication approaches.

**[0159]** FIG. **214** is a block diagram of PC-TCP communication approach that includes window and rate control modules.

**[0160]** FIG. **215** is a schematic of a data network.

**[0161]** FIGS. **216-219** are block diagrams illustrating an embodiment PC-TCP communication approach that is configured according to a number of tunable parameters.

**[0162]** FIG. **220** is a diagram showing a network communication system.

**[0163]** FIG. **221** is a schematic diagram illustrating use of stored communication parameters.

**[0164]** FIG. **222** is a schematic diagram illustrating a first embodiment or multi-path content delivery.

**[0165]** FIGS. **223-225** are schematic diagrams illustrating a second embodiment of multi-path content delivery.

**[0166]** FIG. **226** is a diagrammatic view depicting an integrated cooktop of intelligent cooking system methods and systems in accordance with the present teachings.

**[0167]** FIG. **227** is a diagrammatic view depicting a single intelligent burner of the intelligent cooking system in accordance with the present teachings.

**[0168]** FIG. **228** is a partial exterior view depicting a solar-powered hydrogen production and storage station in accordance with the present teachings.

**[0169]** FIG. **229** is a diagrammatic view depicting a low-pressure storage system in accordance with the present teachings.

**[0170]** FIG. **230** and FIG. **231** are cross-sectional views of a low-pressure storage system.

**[0171]** FIG. **232** is a diagrammatic view depicting an electrolyzer in accordance with the present teachings.

**[0172]** FIG. **233** is a diagrammatic view depicting features of a platform that interact with electronic devices and participants in a related ecosystem of suppliers, content providers, service providers, and regulators in accordance with the present teachings.

**[0173]** FIG. **234** is a diagrammatic view depicting a smart home embodiment of the intelligent cooking system in accordance with the present teachings.

**[0174]** FIG. **235** is a diagrammatic view depicting a hydrogen production and use system in accordance with the present teachings.

**[0175]** FIG. **236** is a diagrammatic view depicting an electrolytic cell in accordance with the present teachings.

**[0176]** FIG. **237** is a diagrammatic view depicting a hydrogen production system integrated into a cooking system in accordance with the present teachings.

**[0177]** FIG. **238** is a diagrammatic view depicting auto switching connectivity in the form of ad hoc Wi-Fi from the cooktop through nearby mobile devices in a normal connectivity mode when Wi-Fi is available in accordance with the present teachings.

**[0178]** FIG. **239** is a diagrammatic view depicting an auto switching connectivity in the form of ad hoc WiFi from the cooktop through nearby mobile devices for ad hoc use of the local mobile devices for connectivity to the cloud in accordance with the present teachings.

**[0179]** FIG. **240** is a perspective view depicting a three-element induction smart cooking system in accordance with the present teachings.

**[0180]** FIG. **241** is a perspective view depicting a single burner gas smart cooking system in accordance with the present teachings.

**[0181]** FIG. **242** is a perspective view depicting an electric hot plate smart cooking system in accordance with the present teachings.

**[0182]** FIG. **243** is a perspective view depicting a single induction heating element smart cooking system in accordance with the present teachings.

**[0183]** FIGS. **244-251** are views of visual interfaces depicting user interface features of a smart knob in accordance with the present teachings.

**[0184]** FIG. **252** is a perspective view depicting a smart knob deployed on a single heating element cooking system in accordance with the present teachings.

**[0185]** FIG. **253** is a partial perspective view depicting a smart knob deployed on a side of a kitchen appliance for a single heating element cooking system in accordance with the present teachings.

**[0186]** FIGS. **254-257** are perspective views depicting smart temperature probes of the smart cooking system in accordance with the present teachings.

**[0187]** FIGS. **258-263** are diagrammatic views depicting different docks for compatibility with a range of smart phone and tablet devices in accordance with the present teachings.

**[0188]** FIG. **264** and FIG. **266** are diagrammatic views depicting a burner design contemplated for use with a smart cooking system in accordance with the present teachings.

**[0189]** FIG. **265** is a cross sectional view of a burner design contemplated for use with a smart cooking system.

**[0190]** FIG. **267**, FIG. **269**, and FIG. **271** are diagrammatic views depicting a burner design contemplated for use with a smart cooking system. in accordance with another example of the present teachings.

**[0191]** FIG. **268** and FIG. **270** are cross-sectional views of a burner design.

**[0192]** FIGS. **272-274** are diagrammatic views depicting a burner design contemplated for use with a smart cooking system in accordance with a further example of the present teachings.

**[0193]** FIGS. **275-277** are diagrammatic views depicting a burner design contemplated for use with a smart cooking system in accordance with yet another example of the present teachings.

**[0194]** FIG. **278** and FIG. **280** are diagrammatic views depicting a burner design contemplated for use with a smart cooking system in accordance with an additional example of the present teachings.

**[0195]** FIG. **279** is a cross-sectional view of a burner design contemplated for use with a smart cooking system.

**[0196]** FIG. **281** is a flowchart depicting a method associated with a smart kitchen including a smart cooktop and an exhaust fan that may be automatically turned on as water in a pot may begin to boil in accordance with the present teachings.

**[0197]** FIG. **282** is an embodiment method and system related to renewable energy sources for hydrogen production, storage, distribution and use are depicted in accordance with the present teachings in accordance with the present teachings.

**[0198]** FIG. **283** is an alternate embodiment method and system related to renewable energy sources in accordance with the present teachings.

**[0199]** FIG. **284** is an alternate embodiment method and system related to renewable energy sources in accordance with the present teachings.

**[0200]** FIG. **285** depicts environments and manufacturing uses of hydrogen production. storage, distribution and use systems.

## DETAILED DESCRIPTION

**[0201]** Detailed embodiments of the present disclosure are disclosed herein; however, it is to be understood that the disclosed embodiments are merely exemplary of the disclosure, which may be embodied in various forms. Therefore, specific structural and functional details disclosed herein are not to be interpreted as limiting, but merely as a basis for the claims and as a representative basis for teaching one skilled

in the art to variously employ the present disclosure in virtually any appropriately detailed structure.

**[0202]** Methods and systems described herein for industrial machine sensor data streaming, collection, processing, and storage may be configured to operate with existing data collection, processing, and storage systems while preserving access to existing format/frequency range/resolution compatible data. While the industrial machine sensor data streaming facilities described herein may collect a greater volume of data (e.g., longer duration of data collection) from sensors at a wider range of frequencies and with greater resolution than existing data collection systems, methods and systems may be employed to provide access to data from the stream of data that represents one or more ranges of frequency and/or one or more lines of resolution that are purposely compatible with existing systems. Further, a portion of the streamed data may be identified, extracted, stored, and/or forwarded to existing data processing systems to facilitate operation of existing data processing systems that substantively matches operation of existing data processing systems using existing collection-based data. In this way, a newly deployed system for sensing aspects of industrial machines, such as aspects of moving parts of industrial machines, may facilitate continued use of existing sensed data processing facilities, algorithms, models, pattern recognizers, user interfaces, and the like.

**[0203]** Through identification of existing frequency ranges, formats, and/or resolution, such as by accessing a data structure that defines these aspects of existing data, higher resolution streamed data may be configured to represent a specific frequency, frequency range, format, and/or resolution. This configured streamed data can be stored in a data structure that is compatible with existing sensed data structures so that existing processing systems and facilities can access and process the data substantially as if it were the existing data. One approach to adapting streamed data for compatibility with existing sensed data may include aligning the streamed data with existing data so that portions of the streamed data that align with the existing data can be extracted, stored, and made available for processing with existing data processing methods. Alternatively, data processing methods may be configured to process portions of the streamed data that correspond, such as through alignment, to the existing data, with methods that implement functions substantially similar to the methods used to process existing data, such as methods that process data that contain a particular frequency range or a particular resolution and the like.

**[0204]** Methods used to process existing data may be associated with certain characteristics of sensed data, such as certain frequency ranges, sources of data, and the like. As an example, methods for processing bearing sensing information for a moving part of an industrial machine may be capable of processing data from bearing sensors that fall into a particular frequency range. This method can thusly be at least partially identifiable by these characteristics of the data being processed. Therefore, given a set of conditions, such as moving device being sensed, industrial machine type, frequency of data being sensed, and the like, a data processing system may select an appropriate method. Also, given such a set of conditions, an industrial machine data sensing and processing facility may configure elements, such as data filters, routers, processors, and the like, to handle data meeting the conditions.

**[0205]** FIGS. **1** through **5** depict portions of an overall view of an industrial Internet of Things (IoT) data collection, monitoring and control system **10**. FIG. **2** depicts a mobile ad hoc network ("MANET") **20**, which may form a secure, temporal network connection **22** (sometimes connected and sometimes isolated), with a cloud **30** or other remote networking system, so that network functions may occur over the MANET **20** within the environment, without the need for external networks, but at other times information can be sent to and from a central location. This allows the industrial environment to use the benefits of networking and control technologies, while also providing security, such as preventing cyber-attacks. The MANET **20** may use cognitive radio technologies **40**, including those that form up an equivalent to the IP protocol, such as router **42**, MAC **44**, and physical layer technologies **46**. In certain embodiments, the system depicted in FIGS. **1** through **5** provides network-sensitive or network-aware transport of data over the network to and from a data collection device or a heavy industrial machine.

**[0206]** FIGS. **3-4** depict intelligent data collection technologies deployed locally, at the edge of an IoT deployment, where heavy industrial machines are located. This includes various sensors **52**, IoT devices **54**, data storage capabilities (e.g., data pools **60**, or distributed ledger **62**) (including intelligent, self-organizing storage), sensor fusion (including self-organizing sensor fusion), and the like. Interfaces for data collection, including multi-sensory interfaces, tablets, smartphones **58**, and the like are shown. FIG. **3** also shows data pools **60** that may collect data published by machines or sensors that detect conditions of machines, such as for later consumption by local or remote intelligence. A distributed ledger system **62** may distribute storage across the local storage of various elements of the environment, or more broadly throughout the system. FIG. **4** also shows on-device sensor fusion **80**, such as for storing on a device data from multiple analog sensors **82**, which may be analyzed locally or in the cloud, such as by machine learning **84**, including by training a machine based on initial models created by humans that are augmented by providing feedback (such as based on measures of success) when operating the methods and systems disclosed herein.

**[0207]** FIG. **1** depicts a server based portion of an industrial IoT system that may be deployed in the cloud or on an enterprise owner's or operator's premises. The server portion includes network coding (including self-organizing network coding and/or automated configuration) that may configure a network coding model based on feedback measures, network conditions, or the like, for highly efficient transport of large amounts of data across the network to and from data collection systems and the cloud. Network coding may provide a wide range of capabilities for intelligence, analytics, remote control, remote operation, remote optimization, various storage configurations and the like, as depicted in FIG. **1**. The various storage configurations may include distributed ledger storage for supporting transactional data or other elements of the system.

**[0208]** FIG. **5** depicts a programmatic data marketplace **70**, which may be a self-organizing marketplace, such as for making available data that is collected in industrial environments, such as from data collectors, data pools, distributed ledgers, and other elements disclosed herein. Additional detail on the various components and sub-components of FIGS. **1** through **5** is provided throughout this disclosure.

**[0209]** With reference to FIG. **6**, an embodiment of platform **100** may include a local data collection system **102**, which may be disposed in an environment **104**, such as an industrial environment similar to that shown in FIG. **3**, for collecting data from or about the elements of the environment, such as machines, components, systems, sub-systems, ambient conditions, states, workflows, processes, and other elements. The platform **100** may connect to or include portions of the industrial IoT data collection, monitoring and control system **10** depicted in FIGS. **1-5**. The platform **100** may include a network data transport system **108**, such as for transporting data to and from the local data collection system **102** over a network **110**, such as to a host processing system **112**, such as one that is disposed in a cloud computing environment or on the premises of an enterprise, or that consists of distributed components that interact with each other to process data collected by the local data collection system **102**. The host processing system **112**, referred to for convenience in some cases as the host system **112**, may include various systems, components, methods, processes, facilities, and the like for enabling automated, or automation-assisted processing of the data, such as for monitoring one or more environments **104** or networks **110** or for remotely controlling one or more elements in a local environment **104** or in a network **110**. The platform **100** may include one or more local autonomous systems, such as for enabling autonomous behavior, such as reflecting artificial, or machine-based intelligence or such as enabling automated action based on the applications of a set of rules or models upon input data from the local data collection system **102** or from one or more input sources **116**, which may comprise information feeds and inputs from a wide array of sources, including those in the local environment **104**, in a network **110**, in the host system **112**, or in one or more external systems, databases, or the like. The platform **100** may include one or more intelligent systems **118**, which may be disposed in, integrated with, or acting as inputs to one or more components of the platform **100**. Details of these and other components of the platform **100** are provided throughout this disclosure.

**[0210]** Intelligent systems **118** may include cognitive systems **120**, such as enabling a degree of cognitive behavior as a result of the coordination of processing elements, such as mesh, peer-to-peer, ring, serial, and other architectures, where one or more node elements is coordinated with other node elements to provide collective, coordinated behavior to assist in processing, communication, data collection, or the like. The MANET **20** depicted in FIG. **2** may also use cognitive radio technologies, including those that form up an equivalent to the IP protocol, such as router **42**, MAC **44**, and physical layer technologies **46**. In one example, the cognitive system technology stack can include examples disclosed in U.S. Pat. No. 8,060,017 to Schlicht et al., issued 15 Nov. 2011 and hereby incorporated by reference as if fully set forth herein.

**[0211]** Intelligent systems may include machine learning systems **122**, such as for learning on one or more data sets. The one or more data sets may include information collected using local data collection systems **102** or other information from input sources **116**, such as to recognize states, objects, events, patterns, conditions, or the like that may, in turn, be used for processing by the host system **112** as inputs to components of the platform **100** and portions of the industrial IoT data collection, monitoring and control system **10**, or the like. Learning may be human-supervised or fully-automated, such as using one or more input sources **116** to provide a data set, along with information about the item to be learned. Machine learning may use one or more models, rules, semantic understandings, workflows, or other structured or semi-structured understanding of the world, such as for automated optimization of control of a system or process based on feedback or feed forward to an operating model for the system or process. One such machine learning technique for semantic and contextual understandings, workflows, or other structured or semi-structured understandings is disclosed in U.S. Pat. No. 8,200,775 to Moore, issued 12 Jun. 2012, and hereby incorporated by reference as if fully set forth herein. Machine learning may be used to improve the foregoing, such as by adjusting one or more weights, structures, rules, or the like (such as changing a function within a model) based on feedback (such as regarding the success of a model in a given situation) or based on iteration (such as in a recursive process). Where sufficient understanding of the underlying structure or behavior of a system is not known, insufficient data is not available, or in other cases where preferred for various reasons, machine learning may also be undertaken in the absence of an underlying model; that is, input sources may be weighted, structured, or the like within a machine learning facility without regard to any a priori understanding of structure, and outcomes (such as those based on measures of success at accomplishing various desired objectives) can be serially fed to the machine learning system to allow it to learn how to achieve the targeted objectives. For example, the system may learn to recognize faults, to recognize patterns, to develop models or functions, to develop rules, to optimize performance, to minimize failure rates, to optimize profits, to optimize resource utilization, to optimize flow (such as flow of traffic), or to optimize many other parameters that may be relevant to successful outcomes (such as outcomes in a wide range of environments). Machine learning may use genetic programming techniques, such as promoting or demoting one or more input sources, structures, data types, objects, weights, nodes, links, or other factors based on feedback (such that successful elements emerge over a series of generations). For example, alternative available sensor inputs for a data collection system **102** may be arranged in alternative configurations and permutations, such that the system may, using generic programming techniques over a series of data collection events, determine what permutations provide successful outcomes based on various conditions (such as conditions of components of the platform **100**, conditions of the network **110**, conditions of a data collection system **102**, conditions of an environment **104**), or the like. In embodiments, local machine learning may turn on or off one or more sensors in a multi-sensor data collector **102** in permutations over time, while tracking success outcomes such as contributing to success in predicting a failure, contributing to a performance indicator (such as efficiency, effectiveness, return on investment, yield, or the like), contributing to optimization of one or more parameters, identification of a pattern (such as relating to a threat, a failure mode, a success mode, or the like) or the like. For example, a system may learn what sets of sensors should be turned on or off under given conditions to achieve the highest value utilization of a data collector **102**. In embodiments, similar techniques may be used to handle optimization of transport of data in the platform **100** (such as in the

network **110**) by using generic programming or other machine learning techniques to learn to configure network elements (such as configuring network transport paths, configuring network coding types and architectures, configuring network security elements), and the like.

**[0212]** In embodiments, the local data collection system **102** may include a high-performance, multi-sensor data collector having a number of novel features for collection and processing of analog and other sensor data. In embodiments, a local data collection system **102** may be deployed to the industrial facilities depicted in FIG. **3**. A local data collection system **102** may also be deployed monitor other machines such as the machine **2300** in FIG. **9** and FIG. **10**, the machines **2400**, **2600**, **2800**, **2950**, **3000** depicted in FIG. **12**, and the machines **3202**, **3204** depicted in FIG. **13**. The data collection system **102** may have on-board intelligent systems **118** (such as for learning to optimize the configuration and operation of the data collector, such as configuring permutations and combinations of sensors based on contexts and conditions). In one example, the data collection system **102** includes a crosspoint switch **130** or other analog switch. Automated, intelligent configuration of the local data collection system **102** may be based on a variety of types of information, such as information from various input sources, including those based on available power, power requirements of sensors, the value of the data collected (such as based on feedback information from other elements of the platform **100**), the relative value of information (such as values based on the availability of other sources of the same or similar information), power availability (such as for powering sensors), network conditions, ambient conditions, operating states, operating contexts, operating events, and many others.

**[0213]** FIG. **7** shows elements and sub-components of a data collection and analysis system **1100** for sensor data (such as analog sensor data) collected in industrial environments. As depicted in FIG. **7**, embodiments of the methods and systems disclosed herein may include hardware that has several different modules starting with the multiplexer ("MUX") main board **1104**. In embodiments, there may be a MUX option board **1108**. The MUX **114** main board is where the sensors connect to the system. These connections are on top to enable ease of installation. Then there are numerous settings on the underside of this board as well as on the Mux option board **1108**, which attaches to the MUX main board **1104** via two headers one at either end of the board. In embodiments, the Mux option board has the male headers, which mesh together with the female header on the main Mux board. This enables them to be stacked on top of each other taking up less real estate.

**[0214]** In embodiments, the main Mux board and/or the MUX option board then connects to the mother (e.g., with 4 simultaneous channels) and daughter (e.g., with 4 additional channels for 8 total channels) analog boards **1110** via cables where some of the signal conditioning (such as hardware integration) occurs. The signals then move from the analog boards **1110** to an anti-aliasing board (not shown) where some of the potential aliasing is removed. The rest of the aliasing removal is done on the delta sigma board **1112**. The delta sigma board **1112** provides more aliasing protection along with other conditioning and digitizing of the signal. Next, the data moves to the Jennic™ board **1114** for more digitizing as well as communication to a computer via USB or Ethernet. In embodiments, the Jennic™ board **1114** may be replaced with a pic board **1118** for more advanced and efficient data collection as well as communication. Once the data moves to the computer software **1102**, the computer software **1102** can manipulate the data to show trending, spectra, waveform, statistics, and analytics.

**[0215]** In embodiments, the system is meant to take in all types of data from volts to 4-20 mA signals. In embodiments, open formats of data storage and communication may be used. In some instances, certain portions of the system may be proprietary especially some of research and data associated with the analytics and reporting. In embodiments, smart band analysis is a way to break data down into easily analyzed parts that can be combined with other smart bands to make new more simplified yet sophisticated analytics. In embodiments, this unique information is taken and graphics are used to depict the conditions because picture depictions are more helpful to the user. In embodiments, complicated programs and user interfaces are simplified so that any user can manipulate the data like an expert.

**[0216]** In embodiments, the system in essence, works in a big loop. The system starts in software with a general user interface ("GUI") **1124**. In embodiments, rapid route creation may take advantage of hierarchical templates. In embodiments, a GUI is created so any general user can populate the information itself with simple templates. Once the templates are created the user can copy and paste whatever the user needs. In addition, users can develop their own templates for future ease of use and to institutionalize the knowledge. When the user has entered all of the user's information and connected all of the user's sensors, the user can then start the system acquiring data.

**[0217]** Embodiments of the methods and systems disclosed herein may include unique electrostatic protection for trigger and vibration inputs. In many critical industrial environments where large electrostatic forces, which can harm electrical equipment, may build up, for example rotating machinery or low-speed balancing using large belts, proper transducer and trigger input protection is required. In embodiments, a low-cost but efficient method is described for such protection without the need for external supplemental devices.

**[0218]** Typically, vibration data collectors are not designed to handle large input voltages due to the expense and the fact that, more often than not, it is not needed. A need exists for these data collectors to acquire many varied types of RPM data as technology improves and monitoring costs plummet. In embodiments, a method is using the already established OptoMOS™ technology which permits the switching up front of high voltage signals rather than using more conventional reed-relay approaches. Many historic concerns regarding non-linear zero crossing or other non-linear solid-state behaviors have been eliminated with regard to the passing through of weakly buffered analog signals. In addition, in embodiments, printed circuit board routing topologies place all of the individual channel input circuitry as close to the input connector as possible. In embodiments, a unique electrostatic protection for trigger and vibration inputs may be placed upfront on the Mux and DAQ hardware in order to dissipate the built up electric charge as the signal passed from the sensor to the hardware. In embodiments, the Mux and analog board may support high-amperage input using a design topology comprising wider traces and solid state relays for upfront circuitry.

**[0219]** In some systems multiplexers are afterthoughts and the quality of the signal coming from the multiplexer is not considered. As a result of a poor quality multiplexer, the quality of the signal can drop as much as 30 dB or more. Thus, substantial signal quality may be lost using a 24-bit DAQ that has a signal to noise ratio of 110 dB and if the signal to noise ratio drops to 80 dB in the Mux, it may not be much better than a 16-bit system from 20 years ago. In embodiments of this system, an important part at the front of the Mux is upfront signal conditioning on Mux for improved signal-to-noise ratio. Embodiments may perform signal conditioning (such as range/gain control, integration, filtering, etc.) on vibration as well as other signal inputs up front before Mux switching to achieve the highest signal-to-noise ratio.

**[0220]** In embodiments, in addition to providing a better signal, the multiplexer may provide a continuous monitor alarming feature. Truly continuous systems monitor every sensor all the time but tend to be expensive. Typical multiplexer systems only monitor a set number of channels at one time and switch from bank to bank of a larger set of sensors. As a result, the sensors not being currently collected are not being monitored; if a level increases the user may never know. In embodiments, a multiplexer may have a continuous monitor alarming feature by placing circuitry on the multiplexer that can measure input channel levels against known alarm conditions even when the data acquisition ("DAQ") is not monitoring the input. In embodiments, continuous monitoring Mux bypass offers a mechanism whereby channels not being currently sampled by the Mux system may be continuously monitored for significant alarm conditions via a number of trigger conditions using filtered peak-hold circuits or functionally similar that are in turn passed on to the monitoring system in an expedient manner using hardware interrupts or other means. This, in essence, makes the system continuously monitoring, although without the ability to instantly capture data on the problem like a true continuous system. In embodiments, coupling this capability to alarm with adaptive scheduling techniques for continuous monitoring and the continuous monitoring system's software adapting and adjusting the data collection sequence based on statistics, analytics, data alarms and dynamic analysis may allow the system to quickly collect dynamic spectral data on the alarming sensor very soon after the alarm sounds.

**[0221]** Another restriction of typical multiplexers is that they may have a limited number of channels. In embodiments, use of distributed complex programmable logic device ("CPLD") chips with dedicated bus for logic control of multiple Mux and data acquisition sections enables a CPLD to control multiple mux and DAQs so that there is no limit to the number of channels a system can handle Interfacing to multiple types of predictive maintenance and vibration transducers requires a great deal of switching. This includes AC/DC coupling, 4-20 interfacing, integrated electronic piezoelectric transducer, channel power-down (for conserving op-amp power), single-ended or differential grounding options, and so on. Also required is the control of digital pots for range and gain control, switches for hardware integration, AA filtering and triggering. This logic can be performed by a series of CPLD chips strategically located for the tasks they control. A single giant CPLD requires long circuit routes with a great deal of density at the single giant CPLD. In embodiments, distributed CPLDs not only address these concerns but offer a great deal of flexibility. A bus is created where each CPLD that has a fixed assignment has its own unique device address. In embodiments, multiplexers and DAQs can stack together offering additional input and output channels to the system. For multiple boards (e.g., for multiple Mux boards), jumpers are provided for setting multiple addresses. In another example, three bits permit up to 8 boards that are jumper configurable. In embodiments, a bus protocol is defined such that each CPLD on the bus can either be addressed individually or as a group.

**[0222]** Typical multiplexers may be limited to collecting only sensors in the same bank. For detailed analysis, this may be limiting as there is tremendous value in being able to simultaneously review data from sensors on the same machine. Current systems using conventional fixed bank multiplexers can only compare a limited number of channels (based on the number of channels per bank) that were assigned to a particular group at the time of installation. The only way to provide some flexibility is to either overlap channels or incorporate lots of redundancy in the system both of which can add considerable expense (in some cases an exponential increase in cost versus flexibility). The simplest Mux design selects one of many inputs and routes it into a single output line. A banked design would consist of a group of these simple building blocks, each handling a fixed group of inputs and routing to its respective output. Typically, the inputs are not overlapping so that the input of one Mux grouping cannot be routed into another. Unlike conventional Mux chips which typically switch a fixed group or banks of a fixed selection of channels into a single output (e.g., in groups of 2, 4, 8, etc.), a cross point Mux allows the user to assign any input to any output. Previously, crosspoint multiplexers were used for specialized purposes such as RGB digital video applications and were as a practical matter too noisy for analog applications such as vibration analysis; however more recent advances in the technology now make it feasible. Another advantage of the crosspoint Mux is the ability to disable outputs by putting them into a high impedance state. This is ideal for an output bus so that multiple Mux cards may be stacked, and their output buses joined together without the need for bus switches.

**[0223]** In embodiments, this may be addressed by use of an analog crosspoint switch for collecting variable groups of vibration input channels and providing a matrix circuit so the system may access any set of eight channels from the total number of input sensors.

**[0224]** In embodiments, the ability to control multiple multiplexers with use of distributed CPLD chips with dedicated bus for logic control of multiple Mux and data acquisition sections is enhanced with a hierarchical multiplexer which allows for multiple DAQ to collect data from multiple multiplexers. A hierarchical Mux may allow modularly output of more channels, such as 16, 24 or more to multiple of eight channel card sets. In embodiments, this allows for faster data collection as well as more channels of simultaneous data collection for more complex analysis. In embodiments, the Mux may be configured slightly to make it portable and use data acquisition parking features, which turns SV3X DAQ into a protected system embodiment.

**[0225]** In embodiments, once the signals leave the multiplexer and hierarchical Mux they move to the analog board where there are other enhancements. In embodiments, power saving techniques may be used such as: power-down of

analog channels when not in use; powering down of component boards; power-down of analog signal processing op-amps for non-selected channels; powering down channels on the mother and the daughter analog boards. The ability to power down component boards and other hardware by the low-level firmware for the DAQ system makes high-level application control with respect to power-saving capabilities relatively easy. Explicit control of the hardware is always possible but not required by default. In embodiments, this power saving benefit may be of value to a protected system, especially if it is battery operated or solar powered.

**[0226]** In embodiments, in order to maximize the signal to noise ratio and provide the best data, a peak-detector for auto-scaling routed into a separate A/D will provide the system the highest peak in each set of data so it can rapidly scale the data to that peak. For vibration analysis purposes, the built-in A/D converters in many microprocessors may be inadequate with regards to number of bits, number of channels or sampling frequency versus not slowing the microprocessor down significantly. Despite these limitations, it is useful to use them for purposes of auto-scaling. In embodiments, a separate A/D may be used that has reduced functionality and is cheaper. For each channel of input, after the signal is buffered (usually with the appropriate coupling: AC or DC) but before it is signal conditioned, the signal is fed directly into the microprocessor or low-cost A/D. Unlike the conditioned signal for which range, gain and filter switches are thrown, no switches are varied. This permits the simultaneous sampling of the auto-scaling data while the input data is signal conditioned, fed into a more robust external A/D, and directed into on-board memory using direct memory access (DMA) methods where memory is accessed without requiring a CPU. This significantly simplifies the auto-scaling process by not having to throw switches and then allow for settling time, which greatly slows down the auto-scaling process. Furthermore, the data may be collected simultaneously, which assures the best signal-to-noise ratio. The reduced number of bits and other features is usually more than adequate for auto-scaling purposes. In embodiments, improved integration using both analog and digital methods create an innovative hybrid integration which also improves or maintains the highest possible signal to noise ratio.

**[0227]** In embodiments, a section of the analog board may allow routing of a trigger channel, either raw or buffered, into other analog channels. This may allow a user to route the trigger to any of the channels for analysis and trouble shooting. Systems may have trigger channels for the purposes of determining relative phase between various input data sets or for acquiring significant data without the needless repetition of unwanted input. In embodiments, digitally controlled relays may be used to switch either the raw or buffered trigger signal into one of the input channels. It may be desirable to examine the quality of the triggering pulse because it may be corrupted for a variety of reasons including inadequate placement of the trigger sensor, wiring issues, faulty setup issues such as a dirty piece of reflective tape if using an optical sensor, and so on. The ability to look at either the raw or buffered signal may offer an excellent diagnostic or debugging vehicle. It also can offer some improved phase analysis capability by making use of the recorded data signal for various signal processing techniques such as variable speed filtering algorithms.

**[0228]** In embodiments, once the signals leave the analog board, the signals move into the delta-sigma board where precise voltage reference for A/D zero reference offers more accurate direct current sensor data. The delta sigma's high speeds also provide for using higher input oversampling for delta-sigma A/D for lower sampling rate outputs to minimize antialiasing filter requirements. Lower oversampling rates can be used for higher sampling rates. For example, a $3^{rd}$ order AA filter set for the lowest sampling requirement for 256 Hz (Fmax of 100 Hz) is then adequate for Fmax ranges of 200 and 500 Hz. Another higher-cutoff AA filter can then be used for Fmax ranges from 1 kHz and higher (with a secondary filter kicking in at 2.56×the highest sampling rate of 128 kHz). In embodiments, a CPLD may be used as a clock-divider for a delta-sigma A/D to achieve lower sampling rates without the need for digital resampling. In embodiments, a high-frequency crystal reference can be divided down to lower frequencies by employing a CPLD as a programmable clock divider. The accuracy of the divided down lower frequencies is even more accurate than the original source relative to their longer time periods. This also minimizes or removes the need for resampling processing by the delta-sigma A/D.

**[0229]** In embodiments, the data then moves from the delta-sigma board to the Jennic™ board where phase relative to input and trigger channels using on-board timers may be digitally derived. In embodiments, the Jennic™ board also has the ability to store calibration data and system maintenance repair history data in an on-board card set. In embodiments, the Jennic™ board will enable acquiring long blocks of data at high-sampling rate as opposed to multiple sets of data taken at different sampling rates so it can stream data and acquire long blocks of data for advanced analysis in the future.

**[0230]** In embodiments, after the signal moves through the Jennic™ board it may then be transmitted to the computer. In embodiments, the computer software will be used to add intelligence to the system starting with an expert system GUI. The GUI will offer a graphical expert system with simplified user interface for defining smart bands and diagnoses which facilitate anyone to develop complex analytics. In embodiments, this user interface may revolve around smart bands, which are a simplified approach to complex yet flexible analytics for the general user. In embodiments, the smart bands may pair with a self-learning neural network for an even more advanced analytical approach. In embodiments, this system may use the machine's hierarchy for additional analytical insight. One critical part of predictive maintenance is the ability to learn from known information during repairs or inspections. In embodiments, graphical approaches for back calculations may improve the smart bands and correlations based on a known fault or problem.

**[0231]** In embodiments, there is a smart route which adapts which sensors it collects simultaneously in order to gain additional correlative intelligence. In embodiments, smart operational data store ("ODS") allows the system to elect to gather data to perform operational deflection shape analysis in order to further examine the machinery condition. In embodiments, adaptive scheduling techniques allow the system to change the scheduled data collected for full spectral analysis across a number (e.g., eight), of correlative channels. In embodiments, the system may provide data to enable extended statistics capabilities for continuous monitoring as well as ambient local vibration for analysis that

combines ambient temperature and local temperature and vibration levels changes for identifying machinery issues.

**[0232]** In embodiments, a data acquisition device may be controlled by a personal computer (PC) to implement the desired data acquisition commands. In embodiments, the DAQ box may be self-sufficient. and can acquire, process, analyze and monitor independent of external PC control. Embodiments may include secure digital (SD) card storage. In embodiments, significant additional storage capability may be provided by utilizing an SD card. This may prove critical for monitoring applications where critical data may be stored permanently. Also, if a power failure should occur, the most recent data may be stored despite the fact that it was not off-loaded to another system.

**[0233]** A current trend has been to make DAQ systems as communicative as possible with the outside world usually in the form of networks including wireless. In the past it was common to use a dedicated bus to control a DAQ system with either a microprocessor or microcontroller/microprocessor paired with a PC. In embodiments, a DAQ system may comprise one or more microprocessor/microcontrollers, specialized microcontrollers/microprocessors, or dedicated processors focused primarily on the communication aspects with the outside world. These include USB, Ethernet and wireless with the ability to provide an IP address or addresses in order to host a webpage. All communications with the outside world are then accomplished using a simple text based menu. The usual array of commands (in practice more than a hundred) such as InitializeCard, AcquireData, StopAcquisition, RetrieveCalibration Info, and so on, would be provided.

**[0234]** In embodiments, intense signal processing activities including resampling, weighting, filtering, and spectrum processing may be performed by dedicated processors such as field-programmable gate array ("FPGAs"), digital signal processor ("DSP"), microprocessors, micro-controllers, or a combination thereof. In embodiments, this subsystem may communicate via a specialized hardware bus with the communication processing section. It will be facilitated with dual-port memory, semaphore logic, and so on. This embodiment will not only provide a marked improvement in efficiency but can significantly improve the processing capability, including the streaming of the data as well other high-end analytical techniques. This negates the need for constantly interrupting the main processes which include the control of the signal conditioning circuits, triggering, raw data acquisition using the A/D, directing the A/D output to the appropriate on-board memory and processing that data.

**[0235]** Embodiments may include sensor overload identification. A need exists for monitoring systems to identify when the sensor is overloading. There may be situations involving high-frequency inputs that will saturate a standard 100 mv/g sensor (which is most commonly used in the industry) and having the ability to sense the overload improves data quality for better analysis. A monitoring system may identify when their system is overloading, but in embodiments, the system may look at the voltage of the sensor to determine if the overload is from the sensor, enabling the user to get another sensor better suited to the situation, or gather the data again.

**[0236]** Embodiments may include radio frequency identification ("RFID") and an inclinometer or accelerometer on a sensor so the sensor can indicate what machine/bearing it is attached to and what direction such that the software can automatically store the data without the user input. In embodiments, users could put the system on any machine or machines and the system would automatically set itself up and be ready for data collection in seconds.

**[0237]** Embodiments may include ultrasonic online monitoring by placing ultrasonic sensors inside transformers, motor control centers, breakers and the like and monitoring, via a sound spectrum, continuously looking for patterns that identify arcing, corona and other electrical issues indicating a break down or issue. Embodiments may include providing continuous ultrasonic monitoring of rotating elements and bearings of an energy production facility. In embodiments, an analysis engine may be used in ultrasonic online monitoring as well as identifying other faults by combining the ultrasonic data with other parameters such as vibration, temperature, pressure, heat flux, magnetic fields, electrical fields, currents, voltage, capacitance, inductance, and combinations (e.g., simple ratios) of the same, among many others.

**[0238]** Embodiments of the methods and systems disclosed herein may include use of an analog crosspoint switch for collecting variable groups of vibration input channels. For vibration analysis, it is useful to obtain multiple channels simultaneously from vibration transducers mounted on different parts of a machine (or machines) in multiple directions. By obtaining the readings at the same time, for example, the relative phases of the inputs may be compared for the purpose of diagnosing various mechanical faults. Other types of cross channel analyses such as cross-correlation, transfer functions, Operating Deflection Shape ("ODS") may also be performed.

**[0239]** Embodiments of the methods and systems disclosed herein may include precise voltage reference for A/D zero reference. Some A/D chips provide their own internal zero voltage reference to be used as a mid-scale value for external signal conditioning circuitry to ensure that both the A/D and external op-amps use the same reference. Although this sounds reasonable in principle, there are practical complications. In many cases these references are inherently based on a supply voltage using a resistor-divider. For many current systems, especially those whose power is derived from a PC via USB or similar bus, this provides for an unreliable reference, as the supply voltage will often vary quite significantly with load. This is especially true for delta-sigma A/D chips which necessitate increased signal processing. Although the offsets may drift together with load, a problem arises if one wants to calibrate the readings digitally. It is typical to modify the voltage offset expressed as counts coming from the A/D digitally to compensate for the DC drift. However, for this case, if the proper calibration offset is determined for one set of loading conditions, they will not apply for other conditions. An absolute DC offset expressed in counts will no longer be applicable. As a result, it becomes necessary to calibrate for all loading conditions which becomes complex, unreliable, and ultimately unmanageable. In embodiments, an external voltage reference is used which is simply independent of the supply voltage to use as the zero offset.

**[0240]** In embodiments, the system provides a phase-lock-loop band pass tracking filter method for obtaining slow-speed RPMs and phase for balancing purposes to remotely balance slow speed machinery, such as in paper mills, as well as offering additional analysis from its data. For balancing purposes, it is sometimes necessary to balance at very

slow speeds. A typical tracking filter may be constructed based on a phase-lock loop or PLL design; however, stability and speed range are overriding concerns. In embodiments, a number of digitally controlled switches are used for selecting the appropriate RC and damping constants. The switching can be done all automatically after measuring the frequency of the incoming tach signal Embodiments of the methods and systems disclosed herein may include digital derivation of phase relative to input and trigger channels using on-board timers. In embodiments, digital phase derivation uses digital timers to ascertain an exact delay from a trigger event to the precise start of data acquisition. This delay, or offset, then, is further refined using interpolation methods to obtain an even more precise offset which is then applied to the analytically determined phase of the acquired data such that the phase is "in essence" an absolute phase with precise mechanical meaning useful for among other things, one-shot balancing, alignment analysis, and so on.

**[0241]** Embodiments of the methods and systems disclosed herein may include signal processing firmware/hardware. In embodiments, long blocks of data may be acquired at high-sampling rate as opposed to multiple sets of data taken at different sampling rates. Typically, in modern route collection for vibration analysis, it is customary to collect data at a fixed sampling rate with a specified data length. The sampling rate and data length may vary from route point to point based on the specific mechanical analysis requirements at hand. For example, a motor may require a relatively low sampling rate with high resolution to distinguish running speed harmonics from line frequency harmonics. The practical trade-off here though is that it takes more collection time to achieve this improved resolution. In contrast, some high-speed compressors or gear sets require much higher sampling rates to measure the amplitudes of relatively higher frequency data although the precise resolution may not be as necessary. Ideally, however, it would be better to collect a very long sample length of data at a very high-sampling rate. When digital acquisition devices were first popularized in the early 1980's, the A/D sampling, digital storage, and computational abilities were not close to what they are today, so compromises were made between the time required for data collection and the desired resolution and accuracy. It was because of this limitation that some analysts in the field even refused to give up their analog tape recording systems, which did not suffer as much from these same digitizing drawbacks. A few hybrid systems were employed that would digitize the play back of the recorded analog data at multiple sampling rates and lengths desired, though these systems were admittedly less automated. The more common approach, as mentioned earlier, is to balance data collection time with analysis capability and digitally acquire the data blocks at multiple sampling rates and sampling lengths and digitally store these blocks separately. In embodiments, a long data length of data can be collected at the highest practical sampling rate (e.g., 102.4 kHz; corresponding to a 40 kHz Fmax) and stored. This long block of data can be acquired in the same amount of time as the shorter length of the lower sampling rates utilized by a priori methods so that there is no effective delay added to the sampling at the measurement point, always a concern in route collection. In embodiments, analog tape recording of data is digitally simulated with such a precision that it can be in effect considered continuous or "analog" for many purposes, including for purposes of embodiments of the present disclosure, except where context indicates otherwise.

**[0242]** Embodiments of the methods and systems disclosed herein may include storage of calibration data and maintenance history on-board card sets. Many data acquisition devices which rely on interfacing to a PC to function store their calibration coefficients on the PC. This is especially true for complex data acquisition devices whose signal paths are many and therefore whose calibration tables can be quite large. In embodiments, calibration coefficients are stored in flash memory which will remember this data or any other significant information for that matter, for all practical purposes, permanently. This information may include nameplate information such as serial numbers of individual components, firmware or software version numbers, maintenance history, and the calibration tables. In embodiments, no matter which computer the box is ultimately connected to, the DAQ box remains calibrated and continues to hold all of this critical information. The PC or external device may poll for this information at any time for implantation or information exchange purposes.

**[0243]** Embodiments of the methods and systems disclosed herein may include rapid route creation taking advantage of hierarchical templates. In the field of vibration monitoring, as well as parametric monitoring in general, it is necessary to establish in a database or functional equivalent the existence of data monitoring points. These points are associated a variety of attributes including the following categories: transducer attributes, data collection settings, machinery parameters and operating parameters. The transducer attributes would include probe type, probe mounting type and probe mounting direction or axis orientation. Data collection attributes associated with the measurement would involve a sampling rate, data length, integrated electronic piezoelectric probe power and coupling requirements, hardware integration requirements, 4-20 or voltage interfacing, range and gain settings (if applicable), filter requirements, and so on. Machinery parametric requirements relative to the specific point would include such items as operating speed, bearing type, bearing parametric data which for a rolling element bearing includes the pitch diameter, number of balls, inner race, and outer-race diameters. For a tilting pad bearing, this would include the number of pads and so on. For measurement points on a piece of equipment such as a gearbox, needed parameters would include, for example, the number of gear teeth on each of the gears. For induction motors, it would include the number of rotor bars and poles; for compressors, the number of blades and/or vanes; for fans, the number of blades. For belt/pulley systems, the number of belts as well as the relevant belt-passing frequencies may be calculated from the dimensions of the pulleys and pulley center-to-center distance. For measurements near couplings, the coupling type and number of teeth in a geared coupling may be necessary, and so on. Operating parametric data would include operating load, which may be expressed in megawatts, flow (either air or fluid), percentage, horsepower, feet-per-minute, and so on. Operating temperatures both ambient and operational, pressures, humidity, and so on, may also be relevant. As can be seen, the setup information required for an individual measurement point can be quite large. It is also crucial to performing any legitimate analysis of the data. Machinery, equipment, and bearing specific information are essential for identifying fault fre-

quencies as well as anticipating the various kinds of specific faults to be expected. The transducer attributes as well as data collection parameters are vital for properly interpreting the data along with providing limits for the type of analytical techniques suitable. The traditional means of entering this data has been manual and quite tedious, usually at the lowest hierarchical level (for example, at the bearing level with regards to machinery parameters), and at the transducer level for data collection setup information. It cannot be stressed enough, however, the importance of the hierarchical relationships necessary to organize data—both for analytical and interpretive purposes as well as the storage and movement of data. Here, we are focusing primarily on the storage and movement of data. By its nature, the aforementioned setup information is extremely redundant at the level of the lowest hierarchies; however, because of its strong hierarchical nature, it can be stored quite efficiently in that form. In embodiments, hierarchical nature can be utilized when copying data in the form of templates. As an example, hierarchical storage structure suitable for many purposes is defined from general to specific of company, plant or site, unit or process, machine, equipment, shaft element, bearing, and transducer. It is much easier to copy data associated with a particular machine, piece of equipment, shaft element or bearing than it is to copy only at the lowest transducer level. In embodiments, the system not only stores data in this hierarchical fashion, but robustly supports the rapid copying of data using these hierarchical templates. Similarity of elements at specific hierarchical levels lends itself to effective data storage in hierarchical format. For example, so many machines have common elements such as motors, gearboxes, compressors, belts, fans, and so on. More specifically, many motors can be easily classified as induction, DC, fixed or variable speed. Many gearboxes can be grouped into commonly occurring groupings such as input/output, input pinion/intermediate pinion/output pinion, 4-posters, and so on. Within a plant or company, there are many similar types of equipment purchased and standardized on for both cost and maintenance reasons. This results in an enormous overlapping of similar types of equipment and, as a result, offers a great opportunity for taking advantage of a hierarchical template approach.

**[0244]** Embodiments of the methods and systems disclosed herein may include smart bands. Smart bands refer to any processed signal characteristics derived from any dynamic input or group of inputs for the purposes of analyzing the data and achieving the correct diagnoses. Furthermore, smart bands may even include mini or relatively simple diagnoses for the purposes of achieving a more robust and complex one. Historically, in the field of mechanical vibration analysis, Alarm Bands have been used to define spectral frequency bands of interest for the purposes of analyzing and/or trending significant vibration patterns. The Alarm Band typically consists of a spectral (amplitude plotted against frequency) region defined between a low and high frequency border. The amplitude between these borders is summed in the same manner for which an overall amplitude is calculated. A Smart Band is more flexible in that it not only refers to a specific frequency band but can also refer to a group of spectral peaks such as the harmonics of a single peak, a true-peak level or crest factor derived from a time waveform, an overall derived from a vibration envelope spectrum or other specialized signal analysis technique or a logical combination (AND, OR, XOR, etc.) of these signal attributes. In addition, a myriad assortment of other parametric data, including system load, motor voltage and phase information, bearing temperature, flow rates, and the like, can likewise be used as the basis for forming additional smart bands. In embodiments, Smart Band symptoms may be used as building blocks for an expert system whose engine would utilize these inputs to derive diagnoses. Some of these mini-diagnoses may then in turn be used as Smart-Band symptoms (smart bands can include even diagnoses) for more generalized diagnoses.

**[0245]** Embodiments of the methods and systems disclosed herein may include a neural net expert system using smart bands. Typical vibration analysis engines are rule-based (i.e., they use a list of expert rules which, when met, trigger specific diagnoses). In contrast, a neural approach utilizes the weighted triggering of multiple input stimuli into smaller analytical engines or neurons which in turn feed a simplified weighted output to other neurons. The output of these neurons can be also classified as smart bands which in turn feed other neurons. This produces a more layered approach to expert diagnosing as opposed to the one-shot approach of a rule-based system. In embodiments, the expert system utilizes this neural approach using smart bands; however, it does not preclude rule-based diagnoses being reclassified as smart bands as further stimuli to be utilized by the expert system. From this point-of-view, it can be overviewed as a hybrid approach, although at the highest level it is essentially neural.

**[0246]** Embodiments of the methods and systems disclosed herein may include use of database hierarchy in analysis smart band symptoms and diagnoses may be assigned to various hierarchical database levels. For example, a smart band may be called "Looseness" at the bearing level, trigger "Looseness" at the equipment level, and trigger "Looseness" at the machine level. Another example would be having a smart band diagnosis called "Horizontal Plane Phase Flip" across a coupling and generate a smart band diagnosis of "Vertical Coupling Misalignment" at the machine level.

**[0247]** Embodiments of the methods and systems disclosed herein may include expert system GUIs. In embodiments, the system undertakes a graphical approach to defining smart bands and diagnoses for the expert system. The entry of symptoms, rules, or more generally smart bands for creating a particular machine diagnosis, may be tedious and time consuming. One means of making the process more expedient and efficient is to provide a graphical means by use of wiring. The proposed graphical interface consists of four major components: a symptom parts bin, diagnoses bin, tools bin, and graphical wiring area ("GWA"). In embodiments, a symptom parts bin includes various spectral, waveform, envelope and any type of signal processing characteristic or grouping of characteristics such as a spectral peak, spectral harmonic, waveform true-peak, waveform crest-factor, spectral alarm band, and so on. Each part may be assigned additional properties. For example, a spectral peak part may be assigned a frequency or order (multiple) of running speed. Some parts may be pre-defined or user defined such as a 1×, 2×, 3× running speed, 1×, 2×, 3× gear mesh, 1×, 2×, 3× blade pass, number of motor rotor bars× running speed, and so on.

**[0248]** In embodiments, the diagnoses bin includes various pre-defined as well as user-defined diagnoses such as

misalignment, imbalance, looseness, bearing faults, and so on. Like parts, diagnoses may also be used as parts for the purposes of building more complex diagnoses. In embodiments, the tools bin includes logical operations such as AND, OR, XOR, etc. or other ways of combining the various parts listed above such as Find Max, Find Min, Interpolate, Average, other Statistical Operations, etc. In embodiments, a graphical wiring area includes parts from the parts bin or diagnoses from the diagnoses bin and may be combined using tools to create diagnoses. The various parts, tools and diagnoses will be represented with icons which are simply graphically wired together in the desired manner.

**[0249]** Embodiments of the methods and systems disclosed herein may include a graphical approach for back-calculation definition. In embodiments, the expert system also provides the opportunity for the system to learn. If one already knows that a unique set of stimuli or smart bands corresponds to a specific fault or diagnosis, then it is possible to back-calculate a set of coefficients that when applied to a future set of similar stimuli would arrive at the same diagnosis. In embodiments, if there are multiple sets of data, a best-fit approach may be used. Unlike the smart band GUI, this embodiment will self-generate a wiring diagram. In embodiments, the user may tailor the back-propagation approach settings and use a database browser to match specific sets of data with the desired diagnoses. In embodiments, the desired diagnoses may be created or custom tailored with a smart band GUI. In embodiments, after that, a user may press the GENERATE button and a dynamic wiring of the symptom-to-diagnosis may appear on the screen as it works through the algorithms to achieve the best fit. In embodiments, when complete, a variety of statistics are presented which detail how well the mapping process proceeded. In some cases, no mapping may be achieved if, for example, the input data was all zero or the wrong data (mistakenly assigned) and so on. Embodiments of the methods and systems disclosed herein may include bearing analysis methods. In embodiments, bearing analysis methods may be used in conjunction with a computer aided design ("CAD"), predictive deconvolution, minimum variance distortionless response ("MVDR") and spectrum sum-of-harmonics.

**[0250]** In recent years, there has been a strong drive to save power which has resulted in an influx of variable frequency drives and variable speed machinery. In embodiments, a bearing analysis method is provided. In embodiments, torsional vibration detection and analysis is provided utilizing transitory signal analysis to provide an advanced torsional vibration analysis for a more comprehensive way to diagnose machinery where torsional forces are relevant (such as machinery with rotating components). Due primarily to the decrease in cost of motor speed control systems, as well as the increased cost and consciousness of energy-usage, it has become more economically justifiable to take advantage of the potentially vast energy savings of load control. Unfortunately, one frequently overlooked design aspect of this issue is that of vibration. When a machine is designed to run at only one speed, it is far easier to design the physical structure accordingly so as to avoid mechanical resonances both structural and torsional, each of which can dramatically shorten the mechanical health of a machine. This would include such structural characteristics as the types of materials to use, their weight, stiffening member requirements and placement, bearing types, bearing location, base support constraints, etc. Even with machines running at one speed, designing a structure so as to minimize vibration can prove a daunting task, potentially requiring computer modeling, finite-element analysis, and field testing. By throwing variable speeds into the mix, in many cases, it becomes impossible to design for all desirable speeds. The problem then becomes one of minimization, e.g., by speed avoidance. This is why many modern motor controllers are typically programmed to skip or quickly pass through specific speed ranges or bands. Embodiments may include identifying speed ranges in a vibration monitoring system. Non-torsional, structural resonances are typically fairly easy to detect using conventional vibration analysis techniques. However, this is not the case for torsion. One special area of current interest is the increased incidence of torsional resonance problems, apparently due to the increased torsional stresses of speed change as well as the operation of equipment at torsional resonance speeds. Unlike non-torsional structural resonances which generally manifest their effect with dramatically increased casing or external vibration, torsional resonances generally show no such effect. In the case of a shaft torsional resonance, the twisting motion induced by the resonance may only be discernible by looking for speed and/or phase changes. The current standard methodology for analyzing torsional vibration involves the use of specialized instrumentation. Methods and systems disclosed herein allow analysis of torsional vibration without such specialized instrumentation. This may consist of shutting the machine down and employing the use of strain gauges and/or other special fixturing such as speed encoder plates and/or gears. Friction wheels are another alternative, but they typically require manual implementation and a specialized analyst. In general, these techniques can be prohibitively expensive and/or inconvenient. An increasing prevalence of continuous vibration monitoring systems due to decreasing costs and increasing convenience (e.g., remote access) exists. In embodiments, there is an ability to discern torsional speed and/or phase variations with just the vibration signal. In embodiments, transient analysis techniques may be utilized to distinguish torsionally induced vibrations from mere speed changes due to process control. In embodiments, factors for discernment might focus on one or more of the following aspects: the rate of speed change due to variable speed motor control would be relatively slow, sustained and deliberate; torsional speed changes would tend to be short, impulsive and not sustained; torsional speed changes would tend to be oscillatory, most likely decaying exponentially, process speed changes would not; and smaller speed changes associated with torsion relative to the shaft's rotational speed which suggest that monitoring phase behavior would show the quick or transient speed bursts in contrast to the slow phase changes historically associated with ramping a machine's speed up or down (as typified with Bode or Nyquist plots).

**[0251]** Embodiments of the methods and systems disclosed herein may include improved integration using both analog and digital methods. When a signal is digitally integrated using software, essentially the spectral low-end frequency data has its amplitude multiplied by a function which quickly blows up as it approaches zero and creates what is known in the industry as a "ski-slope" effect. The amplitude of the ski-slope is essentially the noise floor of the instrument. The simple remedy for this is the traditional

hardware integrator, which can perform at signal-to-noise ratios much greater than that of an already digitized signal. It can also limit the amplification factor to a reasonable level so that multiplication by very large numbers is essentially prohibited. However, at high frequencies where the frequency becomes large, the original amplitude which may be well above the noise floor is multiplied by a very small number (1/f) that plunges it well below the noise floor. The hardware integrator has a fixed noise floor that although low floor does not scale down with the now lower amplitude high-frequency data. In contrast, the same digital multiplication of a digitized high-frequency signal also scales down the noise floor proportionally. In embodiments, hardware integration may be used below the point of unity gain where (at a value usually determined by units and/or desired signal to noise ratio based on gain) and software integration may be used above the value of unity gain to produce an ideal result. In embodiments, this integration is performed in the frequency domain. In embodiments, the resulting hybrid data can then be transformed back into a waveform which should be far superior in signal-to-noise ratio when compared to either hardware integrated or software integrated data. In embodiments, the strengths of hardware integration are used in conjunction with those of digital software integration to achieve the maximum signal-to-noise ratio. In embodiments, the first order gradual hardware integrator high pass filter along with curve fitting allow some relatively low frequency data to get through while reducing or eliminating the noise, allowing very useful analytical data that steep filters kill to be salvaged.

**[0252]** Embodiments of the methods and systems disclosed herein may include adaptive scheduling techniques for continuous monitoring. Continuous monitoring is often performed with an up-front Mux whose purpose it is to select a few channels of data among many to feed the hardware signal processing, A/D, and processing components of a DAQ system. This is done primarily out of practical cost considerations. The tradeoff is that all of the points are not monitored continuously (although they may be monitored to a lesser extent via alternative hardware methods). In embodiments, multiple scheduling levels are provided. In embodiments, at the lowest level, which is continuous for the most part, all of the measurement points will be cycled through in round-robin fashion. For example, if it takes 30 seconds to acquire and process a measurement point and there are 30 points, then each point is serviced once every 15 minutes; however, if a point should alarm by whatever criteria the user selects, its priority level can be increased so that it is serviced more often. As there can be multiple grades of severity for each alarm, so can there me multiple levels of priority with regards to monitoring. In embodiments, more severe alarms will be monitored more frequently. In embodiments, a number of additional high-level signal processing techniques can be applied at less frequent intervals. Embodiments may take advantage of the increased processing power of a PC and the PC can temporarily suspend the round-robin route collection (with its multiple tiers of collection) process and stream the required amount of data for a point of its choosing. Embodiments may include various advanced processing techniques such as envelope processing, wavelet analysis, as well as many other signal processing techniques. In embodiments, after acquisition of this data, the DAQ card set will continue with its route at the point it was interrupted. In embodiments, various PC scheduled data acquisitions will follow their own schedules which will be less frequency than the DAQ card route. They may be set up hourly, daily, by number of route cycles (for example, once every 10 cycles) and also increased scheduling-wise based on their alarm severity priority or type of measurement (e.g., motors may be monitored differently than fans).

**[0253]** Embodiments of the methods and systems disclosed herein may include data acquisition parking features. In embodiments, a data acquisition box used for route collection, real time analysis and in general as an acquisition instrument can be detached from its PC (tablet or otherwise) and powered by an external power supply or suitable battery. In embodiments, the data collector still retains continuous monitoring capability and its on-board firmware can implement dedicated monitoring functions for an extended period of time or can be controlled remotely for further analysis. Embodiments of the methods and systems disclosed herein may include extended statistical capabilities for continuous monitoring.

**[0254]** Embodiments of the methods and systems disclosed herein may include ambient sensing plus local sensing plus vibration for analysis. In embodiments, ambient environmental temperature and pressure, sensed temperature and pressure may be combined with long/medium term vibration analysis for prediction of any of a range of conditions or characteristics. Variants may add infrared sensing, infrared thermography, ultrasound, and many other types of sensors and input types in combination with vibration or with each other. Embodiments of the methods and systems disclosed herein may include a smart route. In embodiments, the continuous monitoring system's software will adapt/adjust the data collection sequence based on statistics, analytics, data alarms and dynamic analysis. Typically, the route is set based on the channels the sensors are attached to. In embodiments, with the crosspoint switch, the Mux can combine any input Mux channels to the (e.g., eight) output channels. In embodiments, as channels go into alarm or the system identifies key deviations, it will pause the normal route set in the software to gather specific simultaneous data, from the channels sharing key statistical changes, for more advanced analysis. Embodiments include conducting a smart ODS or smart transfer function.

**[0255]** Embodiments of the methods and systems disclosed herein may include smart ODS and one or more transfer functions. In embodiments, due to a system's multiplexer and crosspoint switch, an ODS, a transfer function, or other special tests on all the vibration sensors attached to a machine/structure can be performed and show exactly how the machine's points are moving in relationship to each other. In embodiments, 40-50 kHz and longer data lengths (e.g., at least one minute) may be streamed, which may reveal different information than what a normal ODS or transfer function will show. In embodiments, the system will be able to determine, based on the data/statistics/analytics to use, the smart route feature that breaks from the standard route and conducts an ODS across a machine, structure or multiple machines and structures that might show a correlation because the conditions/data directs it. In embodiments, for the transfer functions there may be an impact hammer used on one channel and then compared against other vibration sensors on the machine. In embodiments, the system may use the condition changes such as load, speed, temperature or other changes in the machine or system to

conduct the transfer function. In embodiments, different transfer functions may be compared to each other over time. In embodiments, difference transfer functions may be strung together like a movie that may show how the machinery fault changes, such as a bearing that could show how it moves through the four stages of bearing failure and so on. Embodiments of the methods and systems disclosed herein may include a hierarchical Mux.

**[0256]** With reference to FIG. **8**, the present disclosure generally includes digitally collecting or streaming waveform data **2010** from a machine **2020** whose operational speed can vary from relatively slow rotational or oscillational speeds to much higher speeds in different situations. The waveform data **2010**, at least on one machine, may include data from a single axis sensor **2030** mounted at an unchanging reference location **2040** and from a three-axis sensor **2050** mounted at changing locations (or located at multiple locations), including location **2052**. In embodiments, the waveform data **2010** can be vibration data obtained simultaneously from each sensor **2030**, **2050** in a gap-free format for a duration of multiple minutes with maximum resolvable frequencies sufficiently large to capture periodic and transient impact events. By way of this example, the waveform data **2010** can include vibration data that can be used to create an operational deflecting shape. It can also be used, as needed, to diagnose vibrations from which a machine repair solution can be prescribed.

**[0257]** In embodiments, the machine **2020** can further include a housing **2100** that can contain a drive motor **2110** that can drive a shaft **2120**. The shaft **2120** can be supported for rotation or oscillation by a set of bearings **2130**, such as including a first bearing **2140** and a second bearing **2150**. A data collection module **2160** can connect to (or be resident on) the machine **2020**. In one example, the data collection module **2160** can be located and accessible through a cloud network facility **2170**, can collect the waveform data **2010** from the machine **2020**, and deliver the waveform data **2010** to a remote location. A working end **2180** of the drive shaft **2120** of the machine **2020** can drive a windmill, a fan, a pump, a drill, a gear system, a drive system, or other working element, as the techniques described herein can apply to a wide range of machines, equipment, tools, or the like that include rotating or oscillating elements. In other instances, a generator can be substituted for the motor **2110**, and the working end of the drive shaft **2120** can direct rotational energy to the generator to generate power, rather than consume it.

**[0258]** In embodiments, the waveform data **2010** can be obtained using a predetermined route format based on the layout of the machine **2020**. The waveform data **2010** may include data from the single axis sensor **2030** and the three-axis sensor **2050**. The single-axis sensor **2030** can serve as a reference probe with its one channel of data and can be fixed at the unchanging location **2040** on the machine under survey. The three-axis sensor **2050** can serve as a tri-axial probe (e.g., three orthogonal axes) with its three channels of data and can be moved along a predetermined diagnostic route format from one test point to the next test point. In one example, both sensors **2030**, **2050** can be mounted manually to the machine **2020** and can connect to a separate portable computer in certain service examples. The reference probe can remain at one location while the user can move the tri-axial vibration probe along the predetermined route, such as from bearing-to-bearing on a machine. In this example, the user is instructed to locate the sensors at the predetermined locations to complete the survey (or portion thereof) of the machine.

**[0259]** With reference to FIG. **9**, a portion of an exemplary machine **2200** is shown having a tri-axial sensor **2210** mounted to a location **2220** associated with a motor bearing of the machine **2200** with an output shaft **2230** and output member **2240** in accordance with the present disclosure. With reference to FIG. **10**, an exemplary machine **2300** is shown having a tri-axial sensor **2310** and a single-axis vibration sensor **2320** serving as the reference sensor that is attached on the machine **2300** at an unchanging location for the duration of the vibration survey in accordance with the present disclosure. The tri-axial sensor **2310** and the single-axis vibration sensor **2320** can be connected to a data collection system **2330**.

**[0260]** In further examples, the sensors and data acquisition modules and equipment can be integral to, or resident on, the rotating machine. By way of these examples, the machine can contain many single axis sensors and many tri-axial sensors at predetermined locations. The sensors can be originally installed equipment and provided by the original equipment manufacturer or installed at a different time in a retrofit application. The data collection module **2160**, or the like, can select and use one single axis sensor and obtain data from it exclusively during the collection of waveform data **2010** while moving to each of the tri-axial sensors. The data collection module **2160** can be resident on the machine **2020** and/or connect via the cloud network facility **2170**.

**[0261]** With reference to FIG. **8**, the various embodiments include collecting the waveform data **2010** by digitally recording locally, or streaming over, the cloud network facility **2170**. The waveform data **2010** can be collected so as to be gap-free with no interruptions and, in some respects, can be similar to an analog recording of waveform data. The waveform data **2010** from all of the channels can be collected for one to two minutes depending on the rotating or oscillating speed of the machine being monitored. In embodiments, the data sampling rate can be at a relatively high-sampling rate relative to the operating frequency of the machine **2020**.

**[0262]** In embodiments, a second reference sensor can be used, and a fifth channel of data can be collected. As such, the single-axis sensor can be the first channel and tri-axial vibration can occupy the second, the third, and the fourth data channels. This second reference sensor, like the first, can be a single axis sensor, such as an accelerometer. In embodiments, the second reference sensor, like the first reference sensor, can remain in the same location on the machine for the entire vibration survey on that machine. The location of the first reference sensor (i.e., the single axis sensor) may be different than the location of the second reference sensors (i.e., another single axis sensor). In certain examples, the second reference sensor can be used when the machine has two shafts with different operating speeds, with the two reference sensors being located on the two different shafts. In accordance with this example, further single-axis reference sensors can be employed at additional but different unchanging locations associated with the rotating machine.

**[0263]** In embodiments, the waveform data can be transmitted electronically in a gap-free free format at a significantly high rate of sampling for a relatively longer period of time. In one example, the period of time is 60 seconds to 120 seconds. In another example, the rate of sampling is 100 kHz

with a maximum resolvable frequency (Fmax) of 40 kHz. It will be appreciated in light of this disclosure that the waveform data can be shown to approximate more closely some of the wealth of data available from previous instances of analog recording of waveform data.

**[0264]** In embodiments, sampling, band selection, and filtering techniques can permit one or more portions of a long stream of data (i.e., one to two minutes in duration) to be under sampled or over sampled to realize varying effective sampling rates. To this end, interpolation and decimation can be used to further realize varying effective sampling rates. For example, oversampling may be applied to frequency bands that are proximal to rotational or oscillational operating speeds of the sampled machine, or to harmonics thereof, as vibration effects may tend to be more pronounced at those frequencies across the operating range of the machine. In embodiments, the digitally-sampled data set can be decimated to produce a lower sampling rate. It will be appreciated in light of the disclosure that decimate in this context can be the opposite of interpolate. In embodiments, decimating the data set can include first applying a low-pass filter to the digitally-sampled data set and then undersampling the data set.

**[0265]** In one example, a sample waveform at 100 Hz can be undersampled at every tenth point of the digital waveform to produce an effective sampling rate of 10 Hz, but the remaining nine points of that portion of the waveform are effectively discarded and not included in the modeling of the sample waveform. Moreover, this type of bare undersampling can create ghost frequencies due to the undersampling rate (i.e., 10 Hz) relative to the 100 Hz sample waveform.

**[0266]** Most hardware for analog-to-digital conversions uses a sample-and-hold circuit that can charge up a capacitor for a given amount of time such that an average value of the waveform is determined over a specific change in time. It will be appreciated in light of the disclosure that the value of the waveform over the specific change in time is not linear but more similar to a cardinal sinusoidal ("sinc") function; therefore, it can be shown that more emphasis can be placed on the waveform data at the center of the sampling interval with exponential decay of the cardinal sinusoidal signal occurring from its center.

**[0267]** By way of the above example, the sample waveform at 100 Hz can be hardware-sampled at 10 Hz and therefore each sampling point is averaged over 100 milliseconds (e.g., a signal sampled at 100 Hz can have each point averaged over 10 milliseconds). In contrast to the effective discarding of nine out of the ten data points of the sampled waveform as discussed above, the present disclosure can include weighing adjacent data. The adjacent data can refer to the sample points that were previously discarded and the one remaining point that was retained. In one example, a low pass filter can average the adjacent sample data linearly, i.e., determining the sum of every ten points and then dividing that sum by ten. In a further example, the adjacent data can be weighted with a sinc function. The process of weighting the original waveform with the sinc function can be referred to as an impulse function, or can be referred to in the time domain as a convolution.

**[0268]** The present disclosure can be applicable to not only digitizing a waveform signal based on a detected voltage, but can also be applicable to digitizing waveform signals based on current waveforms, vibration waveforms, and image processing signals including video signal rasterization. In one example, the resizing of a window on a computer screen can be decimated, albeit in at least two directions. In these further examples, it will be appreciated that undersampling by itself can be shown to be insufficient. To that end, oversampling or upsampling by itself can similarly be shown to be insufficient, such that interpolation can be used like decimation but in lieu of only undersampling by itself.

**[0269]** It will be appreciated in light of the disclosure that interpolation in this context can refer to first applying a low pass filter to the digitally-sampled waveform data and then upsampling the waveform data. It will be appreciated in light of the disclosure that real-world examples can often require the use of use non-integer factors for decimation or interpolation, or both. To that end, the present disclosure includes interpolating and decimating sequentially in order to realize a non-integer factor rate for interpolating and decimating. In one example, interpolating and decimating sequentially can define applying a low-pass filter to the sample waveform, then interpolating the waveform after the low-pass filter, and then decimating the waveform after the interpolation. In embodiments, the vibration data can be looped to purposely emulate conventional tape recorder loops, with digital filtering techniques used with the effective splice to facilitate longer analyses. It will be appreciated in light of the disclosure that the above techniques do not preclude waveform, spectrum, and other types of analyses to be processed and displayed with a GUI of the user at the time of collection. It will be appreciated in light of the disclosure that newer systems can permit this functionality to be performed in parallel to the high-performance collection of the raw waveform data.

**[0270]** With respect to time of collection issues, it will be appreciated that older systems using the compromised approach of improving data resolution, by collecting at different sampling rates and data lengths, do not in fact save as much time as expected. To that end, every time the data acquisition hardware is stopped and started, latency issues can be created, especially when there is hardware autoscaling performed. The same can be true with respect to data retrieval of the route information (i.e., test locations) that is often in a database format and can be exceedingly slow. The storage of the raw data in bursts to disk (whether solid state or otherwise) can also be undesirably slow.

**[0271]** In contrast, the many embodiments include digitally streaming the waveform data **2010**, as disclosed herein, and also enjoying the benefit of needing to load the route parameter information while setting the data acquisition hardware only once. Because the waveform data **2010** is streamed to only one file, there is no need to open and close files, or switch between loading and writing operations with the storage medium. It can be shown that the collection and storage of the waveform data **2010**, as described herein, can be shown to produce relatively more meaningful data in significantly less time than the traditional batch data acquisition approach. An example of this includes an electric motor about which waveform data can be collected with a data length of 4K points (i.e., 4,096) for sufficiently high resolution in order to, among other things, distinguish electrical sideband frequencies. For fans or blowers, a reduced resolution of 1K (i.e., 1,024) can be used. In certain instances, 1K can be the minimum waveform data length requirement. The sampling rate can be 1,280 Hz and that equates to an Fmax of 500 Hz. It will be appreciated in light

of the disclosure that oversampling by an industry standard factor of 2.56 can satisfy the necessary two-times (2×) oversampling for the Nyquist Criterion with some additional leeway that can accommodate anti-aliasing filter-rolloff. The time to acquire this waveform data would be 1,024 points at 1,280 hertz, which are 800 milliseconds.

**[0272]** To improve accuracy, the waveform data can be averaged. Eight averages can be used with, for example, fifty percent overlap. This would extend the time from 800 milliseconds to 3.6 seconds, which is equal to 800 msec×8 averages×0.5 (overlap ratio)+0.5×800 msec (non-overlapped head and tail ends). After collection at Fmax=500 Hz waveform data, a higher sampling rate can be used. In one example, ten times (10×) the previous sampling rate can be used and Fmax=10 kHz. By way of this example, eight averages can be used with fifty percent (50%) overlap to collect waveform data at this higher rate that can amount to a collection time of 360 msec or 0.36 seconds. It will be appreciated in light of the disclosure that it can be necessary to read the hardware collection parameters for the higher sampling rate from the route list, as well as permit hardware auto-scaling, or the resetting of other necessary hardware collection parameters, or both. To that end, a few seconds of latency can be added to accommodate the changes in sampling rate. In other instances, introducing latency can accommodate hardware autoscaling and changes to hardware collection parameters that can be required when using the lower sampling rate disclosed herein. In addition to accommodating the change in sampling rate, additional time is needed for reading the route point information from the database (i.e., where to monitor and where to monitor next), displaying the route information, and processing the waveform data. Moreover, display of the waveform data and/or associated spectra can also consume significant time. In light of the above, 15 seconds to 20 seconds can elapse while obtaining waveform data at each measurement point.

**[0273]** In further examples, additional sampling rates can be added but this can make the total amount time for the vibration survey even longer because time adds up from changeover time from one sampling rate to another and from the time to obtain additional data at different sampling rate. In one example, a lower sampling rate is used, such as a sampling rate of 128 Hz where Fmax=50 Hz. By way of this example, the vibration survey would, therefore, require an additional 36 seconds for the first set of averaged data at this sampling rate, in addition to others mentioned above, and consequently the total time spent at each measurement point increases even more dramatically. Further embodiments include using similar digital streaming of gap free waveform data as disclosed herein for use with wind turbines and other machines that can have relatively slow speed rotating or oscillating systems. In many examples, the waveform data collected can include long samples of data at a relatively high-sampling rate. In one example, the sampling rate can be 100 kHz and the sampling duration can be for two minutes on all of the channels being recorded. In many examples, one channel can be for the single axis reference sensor and three more data channels can be for the tri-axial three channel sensor. It will be appreciated in light of the disclosure that the long data length can be shown to facilitate detection of extremely low frequency phenomena. The long data length can also be shown to accommodate the inherent speed variability in wind turbine operations. Additionally, the long data length can further be shown to provide the opportunity for using numerous averages such as those discussed herein, to achieve very high spectral resolution, and to make feasible tape loops for certain spectral analyses. Many multiple advanced analytical techniques can now become available because such techniques can use the available long uninterrupted length of waveform data in accordance with the present disclosure.

**[0274]** It will also be appreciated in light of the disclosure that the simultaneous collection of waveform data from multiple channels can facilitate performing transfer functions between multiple channels. Moreover, the simultaneous collection of waveform data from multiple channels facilitates establishing phase relationships across the machine so that more sophisticated correlations can be utilized by relying on the fact that the waveforms from each of the channels are collected simultaneously. In other examples, more channels in the data collection can be used to reduce the time it takes to complete the overall vibration survey by allowing for simultaneous acquisition of waveform data from multiple sensors that otherwise would have to be acquired, in a subsequent fashion, moving sensor to sensor in the vibration survey.

**[0275]** The present disclosure includes the use of at least one of the single-axis reference probe on one of the channels to allow for acquisition of relative phase comparisons between channels. The reference probe can be an accelerometer or other type of transducer that is not moved and, therefore, fixed at an unchanging location during the vibration survey of one machine. Multiple reference probes can each be deployed as at suitable locations fixed in place (i.e., at unchanging locations) throughout the acquisition of vibration data during the vibration survey. In certain examples, up to seven reference probes can be deployed depending on the capacity of the data collection module **2160** or the like. Using transfer functions or similar techniques, the relative phases of all channels may be compared with one another at all selected frequencies. By keeping the one or more reference probes fixed at their unchanging locations while moving or monitoring the other tri-axial vibration sensors, it can be shown that the entire machine can be mapped with regard to amplitude and relative phase. This can be shown to be true even when there are more measurement points than channels of data collection. With this information, an operating deflection shape can be created that can show dynamic movements of the machine in 3 D, which can provide an invaluable diagnostic tool. In embodiments, the one or more reference probes can provide relative phase, rather than absolute phase. It will be appreciated in light of the disclosure that relative phase may not be as valuable absolute phase for some purposes, but the relative phase the information can still be shown to be very useful.

**[0276]** In embodiments, the sampling rates used during the vibration survey can be digitally synchronized to predetermined operational frequencies that can relate to pertinent parameters of the machine such as rotating or oscillating speed. Doing this, permits extracting even more information using synchronized averaging techniques. It will be appreciated in light of the disclosure that this can be done without the use of a key phasor or a reference pulse from a rotating shaft, which is usually not available for route collected data. As such, non-synchronous signals can be removed from a complex signal without the need to deploy synchronous averaging using the key phasor. This can be shown to be very powerful when analyzing a particular pinion in a

gearbox or generally applied to any component within a complicated mechanical mechanism. In many instances, the key phasor or the reference pulse is rarely available with route collected data, but the techniques disclosed herein can overcome this absence. In embodiments, there can be multiple shafts running at different speeds within the machine being analyzed. In certain instances, there can be a single-axis reference probe for each shaft. In other instances, it is possible to relate the phase of one shaft to another shaft using only one single axis reference probe on one shaft at its unchanging location. In embodiments, variable speed equipment can be more readily analyzed with relatively longer duration of data relative to single speed equipment. The vibration survey can be conducted at several machine speeds within the same contiguous set of vibration data using the same techniques disclosed herein. These techniques can also permit the study of the change of the relationship between vibration and the change of the rate of speed that was not available before.

**[0277]** In embodiments, there are numerous analytical techniques that can emerge from because raw waveform data can be captured in a gap-free digital format as disclosed herein. The gap-free digital format can facilitate many paths to analyze the waveform data in many ways after the fact to identify specific problems. The vibration data collected in accordance with the techniques disclosed herein can provide the analysis of transient, semi-periodic and very low frequency phenomena. The waveform data acquired in accordance with the present disclosure can contain relatively longer streams of raw gap-free waveform data that can be conveniently played back as needed, and on which many and varied sophisticated analytical techniques can be performed. A large number of such techniques can provide for various forms of filtering to extract low amplitude modulations from transient impact data that can be included in the relatively longer stream of raw gap-free waveform data. It will be appreciated in light of the disclosure that in past data collection practices, these types of phenomena were typically lost by the averaging process of the spectral processing algorithms because the goal of the previous data acquisition module was purely periodic signals; or these phenomena were lost to file size reduction methodologies due to the fact that much of the content from an original raw signal was typically discarded knowing it would not be used.

**[0278]** In embodiments, there is a method of monitoring vibration of a machine having at least one shaft supported by a set of bearings. The method includes monitoring a first data channel assigned to a single-axis sensor at an unchanging location associated with the machine. The method also includes monitoring a second, third, and fourth data channel assigned to a three-axis sensor. The method further includes recording gap-free digital waveform data simultaneously from all of the data channels while the machine is in operation; and determining a change in relative phase based on the digital waveform data. The method also includes the tri-axial sensor being located at a plurality of positions associated with the machine while obtaining the digital waveform. In embodiments, the second, third, and fourth channels are assigned together to a sequence of tri-axial sensors each located at different positions associated with the machine. In embodiments, the data is received from all of the sensors on all of their channels simultaneously.

**[0279]** The method also includes determining an operating deflection shape based on the change in relative phase information and the waveform data. In embodiments, the unchanging location of the reference sensor is a position associated with a shaft of the machine. In embodiments, the tri-axial sensors in the sequence of the tri-axial sensors are each located at different positions and are each associated with different bearings in the machine. In embodiments, the unchanging location is a position associated with a shaft of the machine and, wherein, the tri-axial sensors in the sequence of the tri-axial sensors are each located at different positions and are each associated with different bearings that support the shaft in the machine. The various embodiments include methods of sequentially monitoring vibration or similar process parameters and signals of a rotating or oscillating machine or analogous process machinery from a number of channels simultaneously, which can be known as an ensemble. In various examples, the ensemble can include one to eight channels. In further examples, an ensemble can represent a logical measurement grouping on the equipment being monitored whether those measurement locations are temporary for measurement, supplied by the original equipment manufacturer, retrofit at a later date, or one or more combinations thereof.

**[0280]** In one example, an ensemble can monitor bearing vibration in a single direction. In a further example, an ensemble can monitor three different directions (e.g., orthogonal directions) using a tri-axial sensor. In yet further examples, an ensemble can monitor four or more channels where the first channel can monitor a single axis vibration sensor, and the second, the third, and the fourth channels can monitor each of the three directions of the tri-axial sensor. In other examples, the ensemble can be fixed to a group of adjacent bearings on the same piece of equipment or an associated shaft. The various embodiments provide methods that include strategies for collecting waveform data from various ensembles deployed in vibration studies or the like in a relatively more efficient manner. The methods also include simultaneously monitoring of a reference channel assigned to an unchanging reference location associated with the ensemble monitoring the machine. The cooperation with the reference channel can be shown to support a more complete correlation of the collected waveforms from the ensembles. The reference sensor on the reference channel can be a single axis vibration sensor, or a phase reference sensor that can be triggered by a reference location on a rotating shaft or the like. As disclosed herein, the methods can further include recording gap-free digital waveform data simultaneously from all of the channels of each ensemble at a relatively high rate of sampling so as to include all frequencies deemed necessary for the proper analysis of the machinery being monitored while it is in operation. The data from the ensembles can be streamed gap-free to a storage medium for subsequent processing that can be connected to a cloud network facility, a local data link, Bluetooth™ connectivity, cellular data connectivity, or the like.

**[0281]** In embodiments, the methods disclosed herein include strategies for collecting data from the various ensembles including digital signal processing techniques that can be subsequently applied to data from the ensembles to emphasize or better isolate specific frequencies or waveform phenomena. This can be in contrast with current methods that collect multiple sets of data at different sampling rates, or with different hardware filtering configurations including integration, that provide relatively less post-processing flexibility because of the commitment to these

same (known as a priori hardware configurations). These same hardware configurations can also be shown to increase time of the vibration survey due to the latency delays associated with configuring the hardware for each independent test. In embodiments, the methods for collecting data from various ensembles include data marker technology that can be used for classifying sections of streamed data as homogenous and belonging to a specific ensemble. In one example, a classification can be defined as operating speed. In doing so, a multitude of ensembles can be created from what conventional systems would collect as only one. The many embodiments include post-processing analytic techniques for comparing the relative phases of all the frequencies of interest not only between each channel of the collected ensemble but also between all of the channels of all of the ensembles being monitored, when applicable.

**[0282]** With reference to FIG. **12**, the many embodiments include a first machine **2400** having rotating or oscillating components **2410**, or both, each supported by a set of bearings **2420** including a bearing pack **2422**, a bearing pack **2424**, a bearing pack **2426**, and more as needed. The first machine **2400** can be monitored by a first sensor ensemble **2450**. The first ensemble **2450** can be configured to receive signals from sensors originally installed (or added later) on the first machine **2400**. The sensors on the machine **2400** can include single-axis sensors **2460**, such as a single-axis sensor **2462**, a single-axis sensor **2464**, and more as needed. In many examples, the single axis-sensors **2460** can be positioned in the machine **2400** at locations that allow for the sensing of one of the rotating or oscillating components **2410** of the machine **2400**.

**[0283]** The machine **2400** can also have tri-axial (e.g., orthogonal axes) sensors **2480**, such as a tri-axial sensor **2482**, a tri-axial sensor **2484**, and more as needed. In many examples, the tri-axial sensors **2480** can be positioned in the machine **2400** at locations that allow for the sensing of one of each of the bearing packs in the sets of bearings **2420** that is associated with the rotating or oscillating components of the machine **2400**. The machine **2400** can also have temperature sensors **2500**, such as a temperature sensor **2502**, a temperature sensor **2504**, and more as needed. The machine **2400** can also have a tachometer sensor **2510** or more as needed that each detail the RPMs of one of its rotating components. By way of the above example, the first sensor ensemble **2450** can survey the above sensors associated with the first machine **2400**. To that end, the first ensemble **2450** can be configured to receive eight channels. In other examples, the first sensor ensemble **2450** can be configured to have more than eight channels, or less than eight channels as needed. In this example, the eight channels include two channels that can each monitor a single-axis reference sensor signal and three channels that can monitor a tri-axial sensor signal. The remaining three channels can monitor two temperature signals and a signal from a tachometer. In one example, the first ensemble **2450** can monitor the single-axis sensor **2462**, the single-axis sensor **2464**, the tri-axial sensor **2482**, the temperature sensor **2502**, the temperature sensor **2504**, and the tachometer sensor **2510** in accordance with the present disclosure. During a vibration survey on the machine **2400**, the first ensemble **2450** can first monitor the tri-axial sensor **2482** and then move next to the tri-axial sensor **2484**.

**[0284]** After monitoring the tri-axial sensor **2484**, the first ensemble **2450** can monitor additional tri-axial sensors on the machine **2400** as needed and that are part of the predetermined route list associated with the vibration survey of the machine **2400**, in accordance with the present disclosure. During this vibration survey, the first ensemble **2450** can continually monitor the single-axis sensor **2462**, the single-axis sensor **2464**, the two temperature sensors **2502**, **2504**, and the tachometer sensor **2510** while the first ensemble **2450** can serially monitor the multiple tri-axial sensors **2480** in the pre-determined route plan for this vibration survey.

**[0285]** With reference to FIG. **12**, the many embodiments include a second machine **2600** having rotating or oscillating components **2610**, or both, each supported by a set of bearings **2620** including a bearing pack **2622**, a bearing pack **2624**, a bearing pack **2626**, and more as needed. The second machine **2600** can be monitored by a second sensor ensemble **2650**. The second ensemble **2650** can be configured to receive signals from sensors originally installed (or added later) on the second machine **2600**. The sensors on the machine **2600** can include single-axis sensors **2660**, such as a single-axis sensor **2662**, a single-axis sensor **2664**, and more as needed. In many examples, the single axis-sensors **2660** can be positioned in the machine **2600** at locations that allow for the sensing of one of the rotating or oscillating components **2610** of the machine **2600**.

**[0286]** The machine **2600** can also have tri-axial (e.g., orthogonal axes) sensors **2680**, such as a tri-axial sensor **2682**, a tri-axial sensor **2684**, a tri-axial sensor **2686**, a tri-axial sensor **2688**, and more as needed. In many examples, the tri-axial sensors **2680** can be positioned in the machine **2600** at locations that allow for the sensing of one of each of the bearing packs in the sets of bearings **2620** that is associated with the rotating or oscillating components of the machine **2600**. The machine **2600** can also have temperature sensors **2700**, such as a temperature sensor **2702**, a temperature sensor **2704**, and more as needed. The machine **2600** can also have a tachometer sensor **2710** or more as needed that each detail the RPMs of one of its rotating components.

**[0287]** By way of the above example, the second sensor ensemble **2650** can survey the above sensors associated with the second machine **2600**. To that end, the second ensemble **2650** can be configured to receive eight channels. In other examples, the second sensor ensemble **2650** can be configured to have more than eight channels or less than eight channels as needed. In this example, the eight channels include one channel that can monitor a single-axis reference sensor signal and six channels that can monitor two tri-axial sensor signals. The remaining channel can monitor a temperature signal. In one example, the second ensemble **2650** can monitor the single axis sensor **2662**, the tri-axial sensor **2682**, the tri-axial sensor **2684**, and the temperature sensor **2702**. During a vibration survey on the machine **2600** in accordance with the present disclosure, the second ensemble **2650** can first monitor the tri-axial sensor **2682** simultaneously with the tri-axial sensor **2684** and then move onto the tri-axial sensor **2686** simultaneously with the tri-axial sensor **2688**.

**[0288]** After monitoring the tri-axial sensors **2680**, the second ensemble **2650** can monitor additional tri-axial sensors (in simultaneous pairs) on the machine **2600** as needed and that are part of the predetermined route list associated with the vibration survey of the machine **2600** in accordance with the present disclosure. During this vibration survey, the second ensemble **2650** can continually monitor the single-

axis sensor **2662** at its unchanging location and the temperature sensor **2702** while the second ensemble **2650** can serially monitor the multiple tri-axial sensors in the predetermined route plan for this vibration survey.

**[0289]** With continuing reference to FIG. **12**, the many embodiments include a third machine **2800** having rotating or oscillating components **2810**, or both, each supported by a set of bearings **2820** including a bearing pack **2822**, a bearing pack **2824**, a bearing pack **2826**, and more as needed. The third machine **2800** can be monitored by a third sensor ensemble **2850**. The third ensemble **2850** can be configured with a single-axis sensor **2860**, and two tri-axial (e.g., orthogonal axes) sensors **2880**, **2882**. In many examples, the single axis-sensor **2860** can be secured by the user on the machine **2800** at a location that allows for the sensing of one of the rotating or oscillating components of the machine **2800**. The tri-axial sensors **2880**, **2882** can be also be located on the machine **2800** by the user at locations that allow for the sensing of one of each of the bearings in the sets of bearings that each associated with the rotating or oscillating components of the machine **2800**. The third ensemble **2850** can also include a temperature sensor **2900**. The third ensemble **2850** and its sensors can be moved to other machines unlike the first and second ensembles **2450**, **2650**.

**[0290]** The many embodiments also include a fourth machine **2950** having rotating or oscillating components **2960**, or both, each supported by a set of bearings **2970** including a bearing pack **2972**, a bearing pack **2974**, a bearing pack **2976**, and more as needed. The fourth machine **2950** can be also monitored by the third sensor ensemble **2850** when the user moves it to the fourth machine **2950**. The many embodiments also include a fifth machine **3000** having rotating or oscillating components **3010**, or both. The fifth machine **3000** may not be explicitly monitored by any sensor or any sensor ensembles in operation but it can create vibrations or other impulse energy of sufficient magnitude to be recorded in the data associated with any one of the machines **2400**, **2600**, **2800**, **2950** under a vibration survey.

**[0291]** The many embodiments include monitoring the first sensor ensemble **2450** on the first machine **2400** through the predetermined route as disclosed herein. The many embodiments also include monitoring the second sensor ensemble **2650** on the second machine **2600** through the predetermined route. The locations of machine **2400** being close to machine **2600** can be included in the contextual metadata of both vibration surveys. The third ensemble **2850** can be moved between machine **2800**, machine **2950**, and other suitable machines. The machine **3000** has no sensors onboard as configured, but could be monitored as needed by the third sensor ensemble **2850**. The machine **3000** and its operational characteristics can be recorded in the metadata in relation to the vibration surveys on the other machines to note its contribution due to its proximity.

**[0292]** The many embodiments include hybrid database adaptation for harmonizing relational metadata and streaming raw data formats. Unlike older systems that utilized traditional database structure for associating nameplate and operational parameters (sometimes deemed metadata) with individual data measurements that are discrete and relatively simple, it will be appreciated in light of the disclosure that more modern systems can collect relatively larger quantities of raw streaming data with higher sampling rates and greater resolutions. At the same time, it will also be appreciated in light of the disclosure that the network of metadata with which to link and obtain this raw data or correlate with this raw data, or both, is expanding at ever-increasing rates.

**[0293]** In one example, a single overall vibration level can be collected as part of a route or prescribed list of measurement points. This data collected can then be associated with database measurement location information for a point located on a surface of a bearing housing on a specific piece of the machine adjacent to a coupling in a vertical direction. Machinery analysis parameters relevant to the proper analysis can be associated with the point located on the surface. Examples of machinery analysis parameters relevant to the proper analysis can include a running speed of a shaft passing through the measurement point on the surface. Further examples of machinery analysis parameters relevant to the proper analysis can include one of, or a combination of: running speeds of all component shafts for that piece of equipment and/or machine, bearing types being analyzed such as sleeve or rolling element bearings, the number of gear teeth on gears should there be a gearbox, the number of poles in a motor, slip and line frequency of a motor, roller bearing element dimensions, number of fan blades, or the like. Examples of machinery analysis parameters relevant to the proper analysis can further include machine operating conditions such as the load on the machines and whether load is expressed in percentage, wattage, air flow, head pressure, horsepower, and the like. Further examples of machinery analysis parameters include information relevant to adjacent machines that might influence the data obtained during the vibration study.

**[0294]** It will be appreciated in light of the disclosure that the vast array of equipment and machinery types can support many different classifications, each of which can be analyzed in distinctly different ways. For example, some machines, like screw compressors and hammer mills, can be shown to run much noisier and can be expected to vibrate significantly more than other machines. Machines known to vibrate more significantly can be shown to require a change in vibration levels that can be considered acceptable relative to quieter machines.

**[0295]** The present disclosure further includes hierarchical relationships found in the vibrational data collected that can be used to support proper analysis of the data. One example of the hierarchical data includes the interconnection of mechanical componentry such as a bearing being measured in a vibration survey and the relationship between that bearing, including how that bearing connects to a particular shaft on which is mounted a specific pinion within a particular gearbox, and the relationship between the shaft, the pinion, and the gearbox. The hierarchical data can further include in what particular spot within a machinery gear train that the bearing being monitored is located relative to other components in the machine. The hierarchical data can also detail whether the bearing being measured in a machine is in close proximity to another machine whose vibrations may affect what is being measured in the machine that is the subject of the vibration study.

**[0296]** The analysis of the vibration data from the bearing or other components related to one another in the hierarchical data can use table lookups, searches for correlations between frequency patterns derived from the raw data, and specific frequencies from the metadata of the machine. In some embodiments, the above can be stored in and retrieved from a relational database. In embodiments, National Instru-

ment's Technical Data Management Solution (TDMS) file format can be used. The TDMS file format can be optimized for streaming various types of measurement data (i.e., binary digital samples of waveforms), as well as also being able to handle hierarchical metadata.

**[0297]** The many embodiments include a hybrid relational metadata—binary storage approach (HRM-BSA). The HRM-BSA can include a structured query language (SQL) based relational database engine. The structured query language based relational database engine can also include a raw data engine that can be optimized for throughput and storage density for data that is flat and relatively structureless. It will be appreciated in light of the disclosure that benefits can be shown in the cooperation between the hierarchical metadata and the SQL relational database engine. In one example, marker technologies and pointer sign-posts can be used to make correlations between the raw database engine and the SQL relational database engine. Three examples of correlations between the raw database engine and the SQL relational database engine linkages include: (1) pointers from the SQL database to the raw data; (2) pointers from the ancillary metadata tables or similar grouping of the raw data to the SQL database; and (3) independent storage tables outside the domain of either the SQL database or raw data technologies.

**[0298]** With reference to FIG. **13**, the present disclosure can include pointers for Group **1** and Group **2** that can include associated filenames, path information, table names, database key fields as employed with existing SQL database technologies that can be used to associate a specific database segments or locations, asset properties to specific measurement raw data streams, records with associated time/date stamps, or associated metadata such as operating parameters, panel conditions, and the like. By way of this example, a plant **3200** can include machine one **3202**, machine two **3204**, and many others in the plant **3200**. The machine one **3202** can include a gearbox **3210**, a motor **3212**, and other elements. The machine two **3204** can include a motor **3220**, and other elements. Many waveforms **3230** including waveform **3240**, waveform **3242**, waveform **3244**, and additional waveforms as needed can be acquired from the machines **3202**, **3204** in the plant **3200**. The waveforms **3230** can be associated with the local marker linking tables **3300** and the linking raw data tables **3400**. The machines **3202**, **3204** and their elements can be associated with linking tables having relational databases **3500**. The linking tables raw data tables **3400** and the linking tables having relational databases **3500** can be associated with the linking tables with optional independent storage tables **3600**.

**[0299]** The present disclosure can include markers that can be applied to a time mark or a sample length within the raw waveform data. The markers generally fall into two categories: preset or dynamic. The preset markers can correlate to preset or existing operating conditions (e.g., load, head pressure, air flow cubic feet per minute, ambient temperature, RPMs, and the like.). These preset markers can be fed into the data acquisition system directly. In certain instances, the preset markers can be collected on data channels in parallel with the waveform data (e.g., waveforms for vibration, current, voltage, etc.). Alternatively, the values for the preset markers can be entered manually.

**[0300]** For dynamic markers such as trending data, it can be important to compare similar data like comparing vibration amplitudes and patterns with a repeatable set of operating parameters. One example of the present disclosure includes one of the parallel channel inputs being a key phasor trigger pulse from an operating shaft that can provide RPM information at the instantaneous time of collection. In this example of dynamic markers, sections of collected waveform data can be marked with appropriate speeds or speed ranges.

**[0301]** The present disclosure can also include dynamic markers that can correlate to data that can be derived from post processing and analytics performed on the sample waveform. In further embodiments, the dynamic markers can also correlate to post-collection derived parameters including RPMs, as well as other operationally derived metrics such as alarm conditions like a maximum RPM. In certain examples, many modern pieces of equipment that are candidates for a vibration survey with the portable data collection systems described herein do not include tachometer information. This can be true because it is not always practical or cost justifiable to add a tachometer even though the measurement of RPM can be of primary importance for the vibration survey and analysis. It will be appreciated that for fixed speed machinery obtaining an accurate RPM measurement can be less important especially when the approximate speed of the machine can be ascertained before-hand; however, variable-speed drives are becoming more and more prevalent. It will also be appreciated in light of the disclosure that various signal processing techniques can permit the derivation of RPM from the raw data without the need for a dedicated tachometer signal.

**[0302]** In many embodiments, the RPM information can be used to mark segments of the raw waveform data over its collection history. Further embodiments include techniques for collecting instrument data following a prescribed route of a vibration study. The dynamic markers can enable analysis and trending software to utilize multiple segments of the collection interval indicated by the markers (e.g., two minutes) as multiple historical collection ensembles, rather than just one as done in previous systems where route collection systems would historically store data for only one RPM setting. This could, in turn, be extended to any other operational parameter such as load setting, ambient temperature, and the like, as previously described. The dynamic markers, however, that can be placed in a type of index file pointing to the raw data stream can classify portions of the stream in homogenous entities that can be more readily compared to previously collected portions of the raw data stream

**[0303]** The many embodiments include the hybrid relational metadata-binary storage approach that can use the best of pre-existing technologies for both relational and raw data streams. In embodiments, the hybrid relational metadata—binary storage approach can marry them together with a variety of marker linkages. The marker linkages can permit rapid searches through the relational metadata and can allow for more efficient analyses of the raw data using conventional SQL techniques with pre-existing technology. This can be shown to permit utilization of many of the capabilities, linkages, compatibilities, and extensions that conventional database technologies do not provide.

**[0304]** The marker linkages can also permit rapid and efficient storage of the raw data using conventional binary storage and data compression techniques. This can be shown to permit utilization of many of the capabilities, linkages, compatibilities, and extensions that conventional raw data

technologies provide such as TMDS (National Instruments), UFF (Universal File Format such as UFF58), and the like. The marker linkages can further permit using the marker technology links where a vastly richer set of data from the ensembles can be amassed in the same collection time as more conventional systems. The richer set of data from the ensembles can store data snapshots associated with predetermined collection criterion and the proposed system can derive multiple snapshots from the collected data streams utilizing the marker technology. In doing so, it can be shown that a relatively richer analysis of the collected data can be achieved. One such benefit can include more trending points of vibration at a specific frequency or order of running speed versus RPM, load, operating temperature, flow rates, and the like, which can be collected for a similar time relative to what is spent collecting data with a conventional system.

**[0305]** In embodiments, the platform **100** may include the local data collection system **102** deployed in the environment **104** to monitor signals from machines, elements of the machines and the environment of the machines including heavy duty machines deployed at a local job site or at distributed job sites under common control. The heavy-duty machines may include earthmoving equipment, heavy duty on-road industrial vehicles, heavy duty off-road industrial vehicles, industrial machines deployed in various settings such as turbines, turbomachinery, generators, pumps, pulley systems, manifold and valve systems, and the like. In embodiments, heavy industrial machinery may also include earth-moving equipment, earth-compacting equipment, hauling equipment, hoisting equipment, conveying equipment, aggregate production equipment, equipment used in concrete construction, and piledriving equipment. In examples, earth moving equipment may include excavators, backhoes, loaders, bulldozers, skid steer loaders, trenchers, motor graders, motor scrapers, crawler loaders, and wheeled loading shovels. In examples, construction vehicles may include dumpers, tankers, tippers, and trailers. In examples, material handling equipment may include cranes, conveyors, forklift, and hoists. In examples, construction equipment may include tunnel and handling equipment, road rollers, concrete mixers, hot mix plants, road making machines (compactors), stone crashers, pavers, slurry seal machines, spraying and plastering machines, and heavy-duty pumps. Further examples of heavy industrial equipment may include different systems such as implement traction, structure, power train, control, and information. Heavy industrial equipment may include many different powertrains and combinations thereof to provide power for locomotion and to also provide power to accessories and onboard functionality. In each of these examples, the platform **100** may deploy the local data collection system **102** into the environment **104** in which these machines, motors, pumps, and the like, operate and directly connected integrated into each of the machines, motors, pumps, and the like.

**[0306]** In embodiments, the platform **100** may include the local data collection system **102** deployed in the environment **104** to monitor signals from machines in operation and machines in being constructed such as turbine and generator sets like Siemens™ SGT6-5000F™ gas turbine, an SST-900™ steam turbine, an SGen6-1000A™ generator, and an SGen6-100A™ generator, and the like. In embodiments, the local data collection system **102** may be deployed to monitor steam turbines as they rotate in the currents caused by hot water vapor that may be directed through the turbine but otherwise generated from a different source such as from gas-fired burners, nuclear cores, molten salt loops and the like. In these systems, the local data collection system **102** may monitor the turbines and the water or other fluids in a closed loop cycle in which water condenses and is then heated until it evaporates again. The local data collection system **102** may monitor the steam turbines separately from the fuel source deployed to heat the water to steam. In examples, working temperatures of steam turbines may be between 500 and 650° C. In many embodiments, an array of steam turbines may be arranged and configured for high, medium, and low pressure, so they may optimally convert the respective steam pressure into rotational movement.

**[0307]** The local data collection system **102** may also be deployed in a gas turbines arrangement and therefore not only monitor the turbine in operation but also monitor the hot combustion gases feed into the turbine that may be in excess of 1,500° C. Because these gases are much hotter than those in steam turbines, the blades may be cooled with air that may flow out of small openings to create a protective film or boundary layer between the exhaust gases and the blades. This temperature profile may be monitored by the local data collection system **102**. Gas turbine engines, unlike typical steam turbines, include a compressor, a combustion chamber, and a turbine all of which are journaled for rotation with a rotating shaft. The construction and operation of each of these components may be monitored by the local data collection system **102**.

**[0308]** In embodiments, the platform **100** may include the local data collection system **102** deployed in the environment **104** to monitor signals from water turbines serving as rotary engines that may harvest energy from moving water and are used for electric power generation. The type of water turbine or hydro-power selected for a project may be based on the height of standing water, often referred to as head, and the flow (or volume of water) at the site. In this example, a generator may be placed at the top of a shaft that connects to the water turbine. As the turbine catches the naturally moving water in its blade and rotates, the turbine sends rotational power to the generator to generate electrical energy. In doing so, the platform **100** may monitor signals from the generators, the turbines, the local water system, flow controls such as dam windows and sluices. Moreover, the platform **100** may monitor local conditions on the electric grid including load, predicted demand, frequency response, and the like, and include such information in the monitoring and control deployed by platform **100** in these hydroelectric settings.

**[0309]** In embodiments, the platform **100** may include the local data collection system **102** deployed in the environment **104** to monitor signals from energy production environments, such as thermal, nuclear, geothermal, chemical, biomass, carbon-based fuels, hybrid-renewable energy plants, and the like. Many of these plants may use multiple forms of energy harvesting equipment like wind turbines, hydro turbines, and steam turbines powered by heat from nuclear, gas-fired, solar, and molten salt heat sources. In embodiments, elements in such systems may include transmission lines, heat exchangers, desulphurization scrubbers, pumps, coolers, recuperators, chillers, and the like. In embodiments, certain implementations of turbomachinery, turbines, scroll compressors, and the like may be configured in arrayed control so as to monitor large facilities creating electricity for consumption, providing refrigeration, creating

steam for local manufacture and heating, and the like, and that arrayed control platforms may be provided by the provider of the industrial equipment such as Honeywell and their Experion™ PKS platform. In embodiments, the platform **100** may specifically communicate with and integrate the local manufacturer-specific controls and may allow equipment from one manufacturer to communicate with other equipment. Moreover, the platform **100** provides allows for the local data collection system **102** to collect information across systems from many different manufacturers. In embodiments, the platform **100** may include the local data collection system **102** deployed in the environment **104** to monitor signals from marine industrial equipment, marine diesel engines, shipbuilding, oil and gas plants, refineries, petrochemical plant, ballast water treatment solutions, marine pumps and turbines, and the like.

**[0310]** In embodiments, the platform **100** may include the local data collection system **102** deployed in the environment **104** to monitor signals from heavy industrial equipment and processes including monitoring one or more sensors. By way of this example, sensors may be devices that may be used to detect or respond to some type of input from a physical environment, such as an electrical, heat, or optical signal. In embodiments, the local data collection system **102** may include multiple sensors such as, without limitation, a temperature sensor, a pressure sensor, a torque sensor, a flow sensor, a heat sensor, a smoke sensor, an arc sensor, a radiation sensor, a position sensor, an acceleration sensor, a strain sensor, a pressure cycle sensor, a pressure sensor, an air temperature sensor, and the like. The torque sensor may encompass a magnetic twist angle sensor. In one example, the torque and speed sensors in the local data collection system **102** may be similar to those discussed in U.S. Pat. No. 8,352,149 to Meachem, issued 8 Jan. 2013 and hereby incorporated by reference as if fully set forth herein. In embodiments, one or more sensors may be provided such as a tactile sensor, a biosensor, a chemical sensor, an image sensor, a humidity sensor, an inertial sensor, and the like.

**[0311]** In embodiments, the platform **100** may include the local data collection system **102** deployed in the environment **104** to monitor signals from sensors that may provide signals for fault detection including excessive vibration, incorrect material, incorrect material properties, trueness to the proper size, trueness to the proper shape, proper weight, trueness to balance. Additional fault sensors include those for inventory control and for inspections such as to confirm that parts are packaged to plan, parts are to tolerance in a plan, occurrence of packaging damage or stress, and sensors that may indicate the occurrence of shock or damage in transit. Additional fault sensors may include detection of the lack of lubrication, over lubrication, the need for cleaning of the sensor detection window, the need for maintenance due to low lubrication, the need for maintenance due to blocking or reduced flow in a lubrication region, and the like.

**[0312]** In embodiments, the platform **100** may include the local data collection system **102** deployed in the environment **104** that includes aircraft operations and manufacture including monitoring signals from sensors for specialized applications such as sensors used in an aircraft's Attitude and Heading Reference System (AHRS), such as gyroscopes, accelerometers, and magnetometers. In embodiments, the platform **100** may include the local data collection system **102** deployed in the environment **104** to monitor signals from image sensors such as semiconductor charge coupled devices (CCDs), active pixel sensors, in complementary metal-oxide-semiconductor (CMOS) or N-type metal-oxide-semiconductor (NMOS, Live MOS) technologies. In embodiments, the platform **100** may include the local data collection system **102** deployed in the environment **104** to monitor signals from sensors such as an infrared (IR) sensor, an ultraviolet (UV) sensor, a touch sensor, a proximity sensor, and the like. In embodiments, the platform **100** may include the local data collection system **102** deployed in the environment **104** to monitor signals from sensors configured for optical character recognition (OCR), reading barcodes, detecting surface acoustic waves, detecting transponders, communicating with home automation systems, medical diagnostics, health monitoring, and the like.

**[0313]** In embodiments, the platform **100** may include the local data collection system **102** deployed in the environment **104** to monitor signals from sensors such as a Micro-Electro-Mechanical Systems (MEMS) sensor, such as ST Microelectronic's™ LSM303AH smart MEMS sensor, which may include an ultra-low-power high-performance system-in-package featuring a 3D digital linear acceleration sensor and a 3D digital magnetic sensor.

**[0314]** In embodiments, the platform **100** may include the local data collection system **102** deployed in the environment **104** to monitor signals from additional large machines such as turbines, windmills, industrial vehicles, robots, and the like. These large mechanical machines include multiple components and elements providing multiple subsystems on each machine. To that end, the platform **100** may include the local data collection system **102** deployed in the environment **104** to monitor signals from individual elements such as axles, bearings, belts, buckets, gears, shafts, gear boxes, cams, carriages, camshafts, clutches, brakes, drums, dynamos, feeds, flywheels, gaskets, pumps, jaws, robotic arms, seals, sockets, sleeves, valves, wheels, actuators, motors, servomotor, and the like. Many of the machines and their elements may include servomotors. The local data collection system **102** may monitor the motor, the rotary encoder, and the potentiometer of the servomechanism to provide three-dimensional detail of position, placement, and progress of industrial processes.

**[0315]** In embodiments, the platform **100** may include the local data collection system **102** deployed in the environment **104** to monitor signals from gear drives, powertrains, transfer cases, multispeed axles, transmissions, direct drives, chain drives, belt-drives, shaft-drives, magnetic drives, and similar meshing mechanical drives. In embodiments, the platform **100** may include the local data collection system **102** deployed in the environment **104** to monitor signals from fault conditions of industrial machines that may include overheating, noise, grinding gears, locked gears, excessive vibration, wobbling, under-inflation, over-inflation, and the like. Operation faults, maintenance indicators, and interactions from other machines may cause maintenance or operational issues may occur during operation, during installation, and during maintenance. The faults may occur in the mechanisms of the industrial machines but may also occur in infrastructure that supports the machine such as its wiring and local installation platforms. In embodiments, the large industrial machines may face different types of fault conditions such as overheating, noise, grinding gears, excessive vibration of machine parts, fan vibration problems, problems with large industrial machines rotating parts.

**[0316]** In embodiments, the platform **100** may include the local data collection system **102** deployed in the environment **104** to monitor signals from industrial machinery including failures that may be caused by premature bearing failure that may occur due to contamination or loss of bearing lubricant. In another example, a mechanical defect such as misalignment of bearings may occur. Many factors may contribute to the failure such as metal fatigue, therefore, the local data collection system **102** may monitor cycles and local stresses. By way of this example, the platform **100** may monitor the incorrect operation of machine parts, lack of maintenance and servicing of parts, corrosion of vital machine parts, such as couplings or gearboxes, misalignment of machine parts, and the like. Though the fault occurrences cannot be completely stopped, many industrial breakdowns may be mitigated to reduce operational and financial losses. The platform **100** provides real-time monitoring and predictive maintenance in many industrial environments wherein it has been shown to present a cost-savings over regularly-scheduled maintenance processes that replace parts according to a rigid expiration of time and not actual load and wear and tear on the element or machine. To that end, the platform **10** may provide reminders of, or perform some, preventive measures such as adhering to operating manual and mode instructions for machines, proper lubrication, and maintenance of machine parts, minimizing or eliminating overrun of machines beyond their defined capacities, replacement of worn but still functional parts as needed, properly training the personnel for machine use, and the like.

**[0317]** In embodiments, the platform **100** may include the local data collection system **102** deployed in the environment **104** to monitor multiple signals that may be carried by a plurality of physical, electronic, and symbolic formats or signals. The platform **100** may employ signal processing including a plurality of mathematical, statistical, computational, heuristic, and linguistic representations and processing of signals and a plurality of operations needed for extraction of useful information from signal processing operations such as techniques for representation, modeling, analysis, synthesis, sensing, acquisition, and extraction of information from signals. In examples, signal processing may be performed using a plurality of techniques, including but not limited to transformations, spectral estimations, statistical operations, probabilistic and stochastic operations, numerical theory analysis, data mining, and the like. The processing of various types of signals forms the basis of many electrical or computational process. As a result, signal processing applies to almost all disciplines and applications in the industrial environment such as audio and video processing, image processing, wireless communications, process control, industrial automation, financial systems, feature extraction, quality improvements such as noise reduction, image enhancement, and the like. Signal processing for images may include pattern recognition for manufacturing inspections, quality inspection, and automated operational inspection and maintenance. The platform **100** may employ many pattern recognition techniques including those that may classify input data into classes based on key features with the objective of recognizing patterns or regularities in data. The platform **100** may also implement pattern recognition processes with machine learning operations and may be used in applications such as computer vision, speech and text processing, radar processing, handwriting recognition, CAD systems, and the like. The platform **100** may employ supervised classification and unsupervised classification. The supervised learning classification algorithms may be based to create classifiers for image or pattern recognition, based on training data obtained from different object classes. The unsupervised learning classification algorithms may operate by finding hidden structures in unlabeled data using advanced analysis techniques such as segmentation and clustering. For example, some of the analysis techniques used in unsupervised learning may include K-means clustering, Gaussian mixture models, Hidden Markov models, and the like. The algorithms used in supervised and unsupervised learning methods of pattern recognition enable the use of pattern recognition in various high precision applications. The platform **100** may use pattern recognition in face detection related applications such as security systems, tracking, sports related applications, fingerprint analysis, medical and forensic applications, navigation and guidance systems, vehicle tracking, public infrastructure systems such as transport systems, license plate monitoring, and the like.

**[0318]** In embodiments, the platform **100** may include the local data collection system **102** deployed in the environment **104** using machine learning to enable derivation-based learning outcomes from computers without the need to program them. The platform **100** may, therefore, learn from and make decisions on a set of data, by making data-driven predictions and adapting according to the set of data. In embodiments, machine learning may involve performing a plurality of machine learning tasks by machine learning systems, such as supervised learning, unsupervised learning, and reinforcement learning. Supervised learning may include presenting a set of example inputs and desired outputs to the machine learning systems. Unsupervised learning may include the learning algorithm itself structuring its input by methods such as pattern detection and/or feature learning. Reinforcement learning may include the machine learning systems performing in a dynamic environment and then providing feedback about correct and incorrect decisions. In examples, machine learning may include a plurality of other tasks based on an output of the machine learning system. In examples, the tasks may also be classified as machine learning problems such as classification, regression, clustering, density estimation, dimensionality reduction, anomaly detection, and the like. In examples, machine learning may include a plurality of mathematical and statistical techniques. In examples, the many types of machine learning algorithms may include decision tree based learning, association rule learning, deep learning, artificial neural networks, genetic learning algorithms, inductive logic programming, support vector machines (SVMs), Bayesian network, reinforcement learning, representation learning, rule-based machine learning, sparse dictionary learning, similarity and metric learning, learning classifier systems (LCS), logistic regression, random forest, K-Means, gradient boost and adaboost, K-nearest neighbors (KNN), a priori algorithms, and the like. In embodiments, certain machine learning algorithms may be used (such as genetic algorithms defined for solving both constrained and unconstrained optimization problems that may be based on natural selection, the process that drives biological evolution). By way of this example, genetic algorithms may be deployed to solve a variety of optimization problems that are not well suited for standard optimi-

zation algorithms, including problems in which the objective functions are discontinuous, not differentiable, stochastic, or highly nonlinear. In an example, the genetic algorithm may be used to address problems of mixed integer programming, where some components restricted to being integer-valued. Genetic algorithms and machine learning techniques and systems may be used in computational intelligence systems, computer vision, Natural Language Processing (NLP), recommender systems, reinforcement learning, building graphical models, and the like. By way of this example, the machine learning systems may be used to perform intelligent computing based control and be responsive to tasks in a wide variety of systems (such as interactive websites and portals, brain-machine interfaces, online security and fraud detection systems, medical applications such as diagnosis and therapy assistance systems, classification of DNA sequences, and the like). In examples, machine learning systems may be used in advanced computing applications (such as online advertising, natural language processing, robotics, search engines, software engineering, speech and handwriting recognition, pattern matching, game playing, computational anatomy, bioinformatics systems and the like). In an example, machine learning may also be used in financial and marketing systems (such as for user behavior analytics, online advertising, economic estimations, financial market analysis, and the like).

**[0319]** Additional details are provided below in connection with the methods, systems, devices, and components depicted in connection with FIGS. **1** through **6**. In embodiments, methods and systems are disclosed herein for cloud-based, machine pattern recognition based on fusion of remote, analog industrial sensors. For example, data streams from vibration, pressure, temperature, accelerometer, magnetic, electrical field, and other analog sensors may be multiplexed or otherwise fused, relayed over a network, and fed into a cloud-based machine learning facility, which may employ one or more models relating to an operating characteristic of an industrial machine, an industrial process, or a component or element thereof. A model may be created by a human who has experience with the industrial environment and may be associated with a training data set (such as models created by human analysis or machine analysis of data that is collected by the sensors in the environment, or sensors in other similar environments. The learning machine may then operate on other data, initially using a set of rules or elements of a model, such as to provide a variety of outputs, such as classification of data into types, recognition of certain patterns (such as those indicating the presence of faults, orthoses indicating operating conditions, such as fuel efficiency, energy production, or the like). The machine learning facility may take feedback, such as one or more inputs or measures of success, such that it may train, or improve, its initial model (such as improvements by adjusting weights, rules, parameters, or the like, based on the feedback). For example, a model of fuel consumption by an industrial machine may include physical model parameters that characterize weights, motion, resistance, momentum, inertia, acceleration, and other factors that indicate consumption, and chemical model parameters (such as those that predict energy produced and/or consumed e.g., such as through combustion, through chemical reactions in battery charging and discharging, and the like). The model may be refined by feeding in data from sensors disposed in the environment of a machine, in the machine, and the like, as well as data indicating actual fuel consumption, so that the machine can provide increasingly accurate, sensor-based, estimates of fuel consumption and can also provide output that indicate what changes can be made to increase fuel consumption (such as changing operation parameters of the machine or changing other elements of the environment, such as the ambient temperature, the operation of a nearby machine, or the like). For example, if a resonance effect between two machines is adversely affecting one of them, the model may account for this and automatically provide an output that results in changing the operation of one of the machines (such as to reduce the resonance, to increase fuel efficiency of one or both machines). By continuously adjusting parameters to cause outputs to match actual conditions, the machine learning facility may self-organize to provide a highly accurate model of the conditions of an environment (such as for predicting faults, optimizing operational parameters, and the like). This may be used to increase fuel efficiency, to reduce wear, to increase output, to increase operating life, to avoid fault conditions, and for many other purposes.

**[0320]** FIG. **14** illustrates components and interactions of a data collection architecture involving the application of cognitive and machine learning systems to data collection and processing. Referring to FIG. **14**, a data collection system **102** may be disposed in an environment (such as an industrial environment where one or more complex systems, such as electro-mechanical systems and machines are manufactured, assembled, or operated). The data collection system **102** may include onboard sensors and may take input, such as through one or more input interfaces or ports **4008**, from one or more sensors (such as analog or digital sensors of any type disclosed herein) and from one or more input sources **116** (such as sources that may be available through Wi-Fi, Bluetooth, NFC, or other local network connections or over the Internet). Sensors may be combined and multiplexed (such as with one or more multiplexers **4002**). Data may be cached or buffered in a cache/buffer **4022** and made available to external systems, such as a remote host processing system **112** as described elsewhere in this disclosure (which may include an extensive processing architecture **4024**, including any of the elements described in connection with other embodiments described throughout this disclosure and in the Figure), though one or more output interfaces and ports **4010** (which may in embodiments be separate from or the same as the input interfaces and ports **4008**). The data collection system **102** may be configured to take input from a host processing system **112**, such as input from an analytic system **4018**, which may operate on data from the data collection system **102** and data from other input sources **116** to provide analytic results, which in turn may be provided as a learning feedback input **4012** to the data collection system, such as to assist in configuration and operation of the data collection system **102**.

**[0321]** Combination of inputs (including selection of what sensors or input sources to turn "on" or "off") may be performed under the control of machine-based intelligence, such as using a local cognitive input selection system **4004**, an optionally remote cognitive input selection system **4114**, or a combination of the two. The cognitive input selection systems **4004**, **4014** may use intelligence and machine learning capabilities described elsewhere in this disclosure, such as using detected conditions (such as conditions informed by the input sources **116** or sensors), state infor-

mation (including state information determined by a machine state recognition system **4020** that may determine a state), such as relating to an operational state, an environmental state, a state within a known process or workflow, a state involving a fault or diagnostic condition, or many others. This may include optimization of input selection and configuration based on learning feedback from the learning feedback system **4012**, which may include providing training data (such as from the host processing system **112** or from other data collection systems **102** either directly or from the host **112**) and may include providing feedback metrics, such as success metrics calculated within the analytic system **4018** of the host processing system **112**. For example, if a data stream consisting of a particular combination of sensors and inputs yields positive results in a given set of conditions (such as providing improved pattern recognition, improved prediction, improved diagnosis, improved yield, improved return on investment, improved efficiency, or the like), then metrics relating to such results from the analytic system **4018** can be provided via the learning feedback system **4012** to the cognitive input selection systems **4004**, **4014** to help configure future data collection to select that combination in those conditions (allowing other input sources to be de-selected, such as by powering down the other sensors). In embodiments, selection and de-selection of sensor combinations, under control of one or more of the cognitive input selection systems **4004**, may occur with automated variation, such as using genetic programming techniques, based on learning feedback **4012**, such as from the analytic system **4018**, effective combinations for a given state or set of conditions are promoted, and less effective combinations are demoted, resulting in progressive optimization and adaptation of the local data collection system to each unique environment. Thus, an automatically adapting, multi-sensor data collection system is provided, where cognitive input selection is used (with feedback) to improve the effectiveness, efficiency, or other performance parameters of the data collection system within its particular environment. Performance parameters may relate to overall system metrics (such as financial yields, process optimization results, energy production or usage, and the like), analytic metrics (such as success in recognizing patterns, making predictions, classifying data, or the like), and local system metrics (such as bandwidth utilization, storage utilization, power consumption, and the like). In embodiments, the analytic system **4018**, the state system **4020** and the cognitive input selection system **4114** of a host may take data from multiple data collection systems **102**, such that optimization (including of input selection) may be undertaken through coordinated operation of multiple systems **102**. For example, the cognitive input selection system **4114** may understand that if one data collection system **102** is already collecting vibration data for an X-axis, the X-axis vibration sensor for the other data collection system might be turned off, in favor of getting Y-axis data from the other data collector **102**. Thus, through coordinated collection by the host cognitive input selection system **4114**, the activity of multiple collectors **102**, across a host of different sensors, can provide for a rich data set for the host processing system **112**, without wasting energy, bandwidth, storage space, or the like. As noted above, optimization may be based on overall system success metrics, analytic success metrics, and local system metrics, or a combination of the above.

**[0322]** Methods and systems are disclosed herein for cloud-based, machine pattern analysis of state information from multiple industrial sensors to provide anticipated state information for an industrial system. In embodiments, machine learning may take advantage of a state machine, such as tracking states of multiple analog and/or digital sensors, feeding the states into a pattern analysis facility, and determining anticipated states of the industrial system based on historical data about sequences of state information. For example, where a temperature state of an industrial machine exceeds a certain threshold and is followed by a fault condition, such as breaking down of a set of bearings, that temperature state may be tracked by a pattern recognizer, which may produce an output data structure indicating an anticipated bearing fault state (whenever an input state of a high temperature is recognized). A wide range of measurement values and anticipated states may be managed by a state machine, relating to temperature, pressure, vibration, acceleration, momentum, inertia, friction, heat, heat flux, galvanic states, magnetic field states, electrical field states, capacitance states, charge and discharge states, motion, position, and many others. States may comprise combined states, where a data structure includes a series of states, each of which is represented by a place in a byte-like data structure. For example, an industrial machine may be characterized by a genetic structure, such as one that provides pressure, temperature, vibration, and acoustic data, the measurement of which takes one place in the data structure, so that the combined state can be operated on as a byte-like structure, such as a structure for compactly characterizing the current combined state of the machine or environment, or compactly characterizing the anticipated state. This byte-like structure can be used by a state machine for machine learning, such as pattern recognition that operates on the structure to determine patterns that reflect combined effects of multiple conditions. A wide variety of such structure can be tracked and used, such as in machine learning, representing various combinations, of various length, of the different elements that can be sensed in an industrial environment. In embodiments, byte-like structures can be used in a genetic programming technique, such as by substituting different types of data, or data from varying sources, and tracking outcomes over time, so that one or more favorable structures emerges based on the success of those structures when used in real world situations, such as indicating successful predictions of anticipated states, or achievement of success operational outcomes, such as increased efficiency, successful routing of information, achieving increased profits, or the like. That is, by varying what data types and sources are used in byte-like structures that are used for machine optimization over time, a genetic programming-based machine learning facility can "evolve" a set of data structures, consisting of a favorable mix of data types (e.g., pressure, temperature, and vibration), from a favorable mix of data sources (e.g., temperature is derived from sensor X, while vibration comes from sensor Y), for a given purpose. Different desired outcomes may result in different data structures that are best adapted to support effective achievement of those outcomes over time with application of machine learning and promotion of structures with favorable results for the desired outcome in question by genetic programming. The promoted data structures may provide compact, efficient data for various activities as described throughout this disclosure, including being stored in data pools (which may be opti-

mized by storing favorable data structures that provide the best operational results for a given environment), being presented in data marketplaces (such as being presented as the most effective structures for a given purpose), and the like.

**[0323]** In embodiments, a platform is provided having cloud-based, machine pattern analysis of state information from multiple analog industrial sensors to provide anticipated state information for an industrial system. In embodiments, the host processing system **112**, such as disposed in the cloud, may include the state system **4020**, which may be used to infer or calculate a current state or to determine an anticipated future state relating to the data collection system **102** or some aspect of the environment in which the data collection system **102** is disposed, such as the state of a machine, a component, a workflow, a process, an event (e.g., whether the event has occurred), an object, a person, a condition, a function, or the like Maintaining state information allows the host processing system **112** to undertake analysis, such as in one or more analytic systems **4018**, to determine contextual information, to apply semantic and conditional logic, and perform many other functions as enabled by the processing architecture **4024** described throughout this disclosure.

**[0324]** In embodiments, a platform is provided having cloud-based policy automation engine for IoT, with creation, deployment, and management of IoT devices. In embodiments, the platform **100** includes (or is integrated with, or included in) the host processing system **112**, such as on a cloud platform, a policy automation engine **4032** for automating creation, deployment, and management of policies to IoT devices. Polices, which may include access policies, network usage policies, storage usage policies, bandwidth usage policies, device connection policies, security policies, rule-based policies, role-based polices, and others, may be required to govern the use of IoT devices. For example, as IoT devices may have many different network and data communications to other devices, policies may be needed to indicate to what devices a given device can connect, what data can be passed on, and what data can be received. As billions of devices with countless potential connections are expected to be deployed in the near future, it becomes impossible for humans to configure policies for IoT devices on a connection-by-connection basis. Accordingly, an intelligent policy automation engine **4032** may include cognitive features for creating, configuring, and managing policies. The policy automation engine **4032** may consume information about possible policies, such as from a policy database or library, which may include one or more public sources of available policies. These may be written in one or more conventional policy languages or scripts. The policy automation engine **4032** may apply the policies according to one or more models, such as based on the characteristics of a given device, machine, or environment. For example, a large machine, such as a machine for power generation, may include a policy that only a verifiably local controller can change certain parameters of the power generation, thereby avoiding a remote "takeover" by a hacker. This may be accomplished in turn by automatically finding and applying security policies that bar connection of the control infrastructure of the machine to the Internet, by requiring access authentication, or the like. The policy automation engine **4032** may include cognitive features, such as varying the application of policies, the configuration of policies, and the like (such as features based on state information from the state system **4020**). The policy automation engine **4032** may take feedback, as from the learning feedback system **4012**, such as based on one or more analytic results from the analytic system **4018**, such as based on overall system results (such as the extent of security breaches, policy violations, and the like), local results, and analytic results. By variation and selection based on such feedback, the policy automation engine **4032** can, over time, learn to automatically create, deploy, configure, and manage policies across very large numbers of devices, such as managing policies for configuration of connections among IoT devices.

**[0325]** Methods and systems are disclosed herein for on-device sensor fusion and data storage for industrial IoT devices, including on-device sensor fusion and data storage for an industrial IoT device, where data from multiple sensors is multiplexed at the device for storage of a fused data stream. For example, pressure and temperature data may be multiplexed into a data stream that combines pressure and temperature in a time series, such as in a byte-like structure (where time, pressure, and temperature are bytes in a data structure, so that pressure and temperature remain linked in time, without requiring separate processing of the streams by outside systems), or by adding, dividing, multiplying, subtracting, or the like, such that the fused data can be stored on the device. Any of the sensor data types described throughout this disclosure can be fused in this manner and stored in a local data pool, in storage, or on an IoT device, such as a data collector, a component of a machine, or the like.

**[0326]** In embodiments, a platform is provided having on-device sensor fusion and data storage for industrial IoT devices. In embodiments, a cognitive system is used for a self-organizing storage system **4028** for the data collection system **102**. Sensor data, and in particular analog sensor data, can consume large amounts of storage capacity, in particular where a data collector **102** has multiple sensor inputs onboard or from the local environment. Simply storing all the data indefinitely is not typically a favorable option, and even transmitting all of the data may strain bandwidth limitations, exceed bandwidth permissions (such as exceeding cellular data plan capacity), or the like. Accordingly, storage strategies are needed. These typically include capturing only portions of the data (such as snapshots), storing data for limited time periods, storing portions of the data (such as intermediate or abstracted forms), and the like. With many possible selections among these and other options, determining the correct storage strategy may be highly complex. In embodiments, the self-organizing storage system **4028** may use a cognitive system, based on learning feedback **4012**, and use various metrics from the analytic system **4018** or other system of the host cognitive input selection system **4114**, such as overall system metrics, analytic metrics, and local performance indicators. The self-organizing storage system **4028** may automatically vary storage parameters, such as storage locations (including local storage on the data collection system **102**, storage on nearby data collection systems **102** (such as using peer-to-peer organization) and remote storage, such as network-based storage), storage amounts, storage duration, type of data stored (including individual sensors or input sources **116**, as well as various combined or multiplexed data, such as selected under the cognitive input selection systems **4004**,

**4014**), storage type (such as using RAM, Flash, or other short-term memory versus available hard drive space), storage organization (such as in raw form, in hierarchies, and the like), and others. Variation of the parameters may be undertaken with feedback, so that over time the data collection system **102** adapts its storage of data to optimize itself to the conditions of its environment, such as a particular industrial environment, in a way that results in its storing the data that is needed in the right amounts and of the right type for availability to users.

**[0327]** In embodiments, the local cognitive input selection system **4004** may organize fusion of data for various onboard sensors, external sensors (such as in the local environment) and other input sources **116** to the local collection system **102** into one or more fused data streams, such as using the multiplexer **4002** to create various signals that represent combinations, permutations, mixes, layers, abstractions, data-metadata combinations, and the like of the source analog and/or digital data that is handled by the data collection system **102**. The selection of a particular fusion of sensors may be determined locally by the cognitive input selection system **4004**, such as based on learning feedback from the learning feedback system **4012**, such as various overall system, analytic system and local system results and metrics. In embodiments, the system may learn to fuse particular combinations and permutations of sensors, such as in order to best achieve correct anticipation of state, as indicated by feedback of the analytic system **4018** regarding its ability to predict future states, such as the various states handled by the state system **4020**. For example, the input selection system **4004** may indicate selection of a sub-set of sensors among a larger set of available sensors, and the inputs from the selected sensors may be combined, such as by placing input from each of them into a byte of a defined, multi-bit data structure (such as a combination by taking a signal from each at a given sampling rate or time and placing the result into the byte structure, then collecting and processing the bytes over time), by multiplexing in the multiplexer **4002**, such as a combination by additive mixing of continuous signals, and the like. Any of a wide range of signal processing and data processing techniques for combination and fusing may be used, including convolutional techniques, coercion techniques, transformation techniques, and the like. The particular fusion in question may be adapted to a given situation by cognitive learning, such as by having the cognitive input selection system **4004** learn, based on feedback **4012** from results (such as feedback conveyed by the analytic system **4018**), such that the local data collection system **102** executes context-adaptive sensor fusion.

**[0328]** In embodiments, the analytic system **4018** may apply to any of a wide range of analytic techniques, including statistical and econometric techniques (such as linear regression analysis, use similarity matrices, heat map based techniques, and the like), reasoning techniques (such as Bayesian reasoning, rule-based reasoning, inductive reasoning, and the like), iterative techniques (such as feedback, recursion, feed-forward and other techniques), signal processing techniques (such as Fourier and other transforms), pattern recognition techniques (such as Kalman and other filtering techniques), search techniques, probabilistic techniques (such as random walks, random forest algorithms, and the like), simulation techniques (such as random walks, random forest algorithms, linear optimization and the like), and others. This may include computation of various statistics or measures. In embodiments, the analytic system **4018** may be disposed, at least in part, on a data collection system **102**, such that a local analytic system can calculate one or more measures, such as measures relating to any of the items noted throughout this disclosure. For example, measures of efficiency, power utilization, storage utilization, redundancy, entropy, and other factors may be calculated onboard, so that the data collection **102** can enable various cognitive and learning functions noted throughout this disclosure without dependence on a remote (e.g., cloud-based) analytic system.

**[0329]** In embodiments, the host processing system **112**, a data collection system **102**, or both, may include, connect to, or integrate with, a self-organizing networking system **4020**, which may comprise a cognitive system for providing machine-based, intelligent or organization of network utilization for transport of data in a data collection system, such as for handling analog and other sensor data, or other source data, such as among one or more local data collection systems **102** and a host system **112**. This may include organizing network utilization for source data delivered to data collection systems, for feedback data, such as analytic data provided to or via a learning feedback system **4012**, data for supporting a marketplace (such as described in connection with other embodiments), and output data provided via output interfaces and ports **4010** from one or more data collection systems **102**.

**[0330]** Methods and systems are disclosed herein for a self-organizing data marketplace for industrial IoT data, including where available data elements are organized in the marketplace for consumption by consumers based on training a self-organizing facility with a training set and feedback from measures of marketplace success. A marketplace may be set up initially to make available data collected from one or more industrial environments, such as presenting data by type, by source, by environment, by machine, by one or more patterns, or the like (such as in a menu or hierarchy). The marketplace may vary the data collected, the organization of the data, the presentation of the data (including pushing the data to external sites, providing links, configuring APIs by which the data may be accessed, and the like), the pricing of the data, or the like, such as under machine learning, which may vary different parameters of any of the foregoing. The machine learning facility may manage all of these parameters by self-organization, such as by varying parameters over time (including by varying elements of the data types presented), the data sourced used to obtain each type of data, the data structures presented (such as byte-like structures, fused or multiplexed structures (such as representing multiple sensor types), and statistical structures (such as representing various mathematical products of sensor information), among others), the pricing for the data, where the data is presented, how the data is presented (such as by APIs, by links, by push messaging, and the like), how the data is stored, how the data is obtained, and the like. As parameters are varied, feedback may be obtained as to measures of success, such as number of views, yield (e.g., price paid) per access, total yield, per unit profit, aggregate profit, and many others, and the self-organizing machine learning facility may promote configurations that improve measures of success and demote configurations that do not, so that, over time, the marketplace is progressively configured to present favorable combinations of data types (e.g., those that provide robust prediction of anticipated states of

particular industrial environments of a given type), from favorable sources (e.g., those that are reliable, accurate and low priced), with effective pricing (e.g., pricing that tends to provide high aggregate profit from the marketplace). The marketplace may include spiders, web crawlers, and the like to seek input data sources, such as finding data pools, connected IoT devices, and the like that publish potentially relevant data. These may be trained by human users and improved by machine learning in a manner similar to that described elsewhere in this disclosure.

**[0331]** In embodiments, a platform is provided having a self-organizing data marketplace for industrial IoT data. Referring to FIG. **15**, in embodiments, a platform is provided having a cognitive data marketplace **4102**, referred to in some cases as a self-organizing data marketplace, for data collected by one or more data collection systems **102** or for data from other sensors or input sources **116** that are located in various data collection environments, such as industrial environments. In addition to data collection systems **102**, this may include data collected, handled or exchanged by IoT devices, such as cameras, monitors, embedded sensors, mobile devices, diagnostic devices and systems, instrumentation systems, telematics systems, and the like, such as for monitoring various parameters and features of machines, devices, components, parts, operations, functions, conditions, states, events, workflows and other elements (collectively encompassed by the term "states") of such environments. Data may also include metadata about any of the foregoing, such as describing data, indicating provenance, indicating elements relating to identity, access, roles, and permissions, providing summaries or abstractions of data, or otherwise augmenting one or more items of data to enable further processing, such as for extraction, transforming, loading, and processing data. Such data (such term including metadata except where context indicates otherwise) may be highly valuable to third parties, either as an individual element (such as the instance where data about the state of an environment can be used as a condition within a process) or in the aggregate (such as the instance where collected data, optionally over many systems and devices in different environments can be used to develop models of behavior, to train learning systems, or the like). As billions of IoT devices are deployed, with countless connections, the amount of available data will proliferate. To enable access and utilization of data, the cognitive data marketplace **4102** enables various components, features, services, and processes for enabling users to supply, find, consume, and transact in packages of data, such as batches of data, streams of data (including event streams), data from various data pools **4120**, and the like. In embodiments, the cognitive data marketplace **4102** may be included in, connected to, or integrated with, one or more other components of a host processing architecture **4024** of a host processing system **112**, such as a cloud-based system, as well as to various sensors, input sources **115**, data collection systems **102** and the like. The cognitive data marketplace **4102** may include marketplace interfaces **4108**, which may include one or more supplier interfaces by which data suppliers may make data available and one more consumer interfaces by which data may be found and acquired. The consumer interface may include an interface to a data market search system **4118**, which may include features that enable a user to indicate what types of data a user wishes to obtain, such as by entering keywords in a natural language search interface that characterize data or metadata. The search interface can use various search and filtering techniques, including keyword matching, collaborative filtering (such as using known preferences or characteristics of the consumer to match to similar consumers and the past outcomes of those other consumers), ranking techniques (such as ranking based on success of past outcomes according to various metrics, such as those described in connection with other embodiments in this disclosure). In embodiments, a supply interface may allow an owner or supplier of data to supply the data in one or more packages to and through the cognitive data marketplace **4102**, such as packaging batches of data, streams of data, or the like. The supplier may pre-package data, such as by providing data from a single input source **116**, a single sensor, and the like, or by providing combinations, permutations, and the like (such as multiplexed analog data, mixed bytes of data from multiple sources, results of extraction, loading and transformation, results of convolution, and the like), as well as by providing metadata with respect to any of the foregoing. Packaging may include pricing, such as on a per-batch basis, on a streaming basis (such as subscription to an event feed or other feed or stream), on a per item basis, on a revenue share basis, or other basis. For data involving pricing, a data transaction system **4114** may track orders, delivery, and utilization, including fulfillment of orders. The transaction system **4114** may include rich transaction features, including digital rights management, such as by managing cryptographic keys that govern access control to purchased data, that govern usage (such as allowing data to be used for a limited time, in a limited domain, by a limited set of users or roles, or for a limited purpose). The transaction system **4114** may manage payments, such as by processing credit cards, wire transfers, debits, and other forms of consideration.

**[0332]** In embodiments, a cognitive data packaging system **4012** of the marketplace **4102** may use machine-based intelligence to package data, such as by automatically configuring packages of data in batches, streams, pools, or the like. In embodiments, packaging may be according to one or more rules, models, or parameters, such as by packaging or aggregating data that is likely to supplement or complement an existing model. For example, operating data from a group of similar machines (such as one or more industrial machines noted throughout this disclosure) may be aggregated together, such as based on metadata indicating the type of data or by recognizing features or characteristics in the data stream that indicate the nature of the data. In embodiments, packaging may occur using machine learning and cognitive capabilities, such as by learning what combinations, permutations, mixes, layers, and the like of input sources **116**, sensors, information from data pools **4120** and information from data collection systems **102** are likely to satisfy user requirements or result in measures of success. Learning may be based on learning feedback **4012**, such as learning based on measures determined in an analytic system **4018**, such as system performance measures, data collection measures, analytic measures, and the like. In embodiments, success measures may be correlated to marketplace success measures, such as viewing of packages, engagement with packages, purchase or licensing of packages, payments made for packages, and the like. Such measures may be calculated in an analytic system **4018**, including associating particular feedback measures with search terms and other inputs, so that the cognitive packag-

ing system **4110** can find and configure packages that are designed to provide increased value to consumers and increased returns for data suppliers. In embodiments, the cognitive data packaging system **4110** can automatically vary packaging, such as using different combinations, permutations, mixes, and the like, and varying weights applied to given input sources, sensors, data pools and the like, using learning feedback **4012** to promote favorable packages and de-emphasize less favorable packages. This may occur using genetic programming and similar techniques that compare outcomes for different packages. Feedback may include state information from the state system **4020** (such as about various operating states, and the like), as well as about marketplace conditions and states, such as pricing and availability information for other data sources. Thus, an adaptive cognitive data packaging system **4110** is provided that automatically adapts to conditions to provide favorable packages of data for the marketplace **4102**.

**[0333]** In embodiments, a cognitive data pricing system **4112** may be provided to set pricing for data packages. In embodiments, the data pricing system **4112** may use a set of rules, models, or the like, such as setting pricing based on supply conditions, demand conditions, pricing of various available sources, and the like. For example, pricing for a package may be configured to be set based on the sum of the prices of constituent elements (such as input sources, sensor data, or the like), or to be set based on a rule-based discount to the sum of prices for constituent elements, or the like. Rules and conditional logic may be applied, such as rules that factor in cost factors (such as bandwidth and network usage, peak demand factors, scarcity factors, and the like), rules that factor in utilization parameters (such as the purpose, domain, user, role, duration, or the like for a package) and many others. In embodiments, the cognitive data pricing system **4112** may include fully cognitive, intelligent features, such as using genetic programming including automatically varying pricing and tracking feedback on outcomes. Outcomes on which tracking feedback may be based include various financial yield metrics, utilization metrics and the like that may be provided by calculating metrics in an analytic system **4018** on data from the data transaction system **4114**.

**[0334]** Methods and systems are disclosed herein for self-organizing data pools which may include self-organization of data pools based on utilization and/or yield metrics, including utilization and/or yield metrics that are tracked for a plurality of data pools. The data pools may initially comprise unstructured or loosely structured pools of data that contain data from industrial environments, such as sensor data from or about industrial machines or components. For example, a data pool might take streams of data from various machines or components in an environment, such as turbines, compressors, batteries, reactors, engines, motors, vehicles, pumps, rotors, axles, bearings, valves, and many others, with the data streams containing analog and/or digital sensor data (of a wide range of types), data published about operating conditions, diagnostic and fault data, identifying data for machines or components, asset tracking data, and many other types of data. Each stream may have an identifier in the pool, such as indicating its source, and optionally its type. The data pool may be accessed by external systems, such as through one or more interfaces or APIs (e.g., RESTful APIs), or by data integration elements (such as gateways, brokers, bridges, connectors, or the like), and the data pool may use similar capabilities to get access to available data streams. A data pool may be managed by a self-organizing machine learning facility, which may configure the data pool, such as by managing what sources are used for the pool, managing what streams are available, and managing APIs or other connections into and out of the data pool. The self-organization may take feedback such as based on measures of success that may include measures of utilization and yield. The measures of utilization and yield that may include may account for the cost of acquiring and/or storing data, as well as the benefits of the pool, measured either by profit or by other measures that may include user indications of usefulness, and the like. For example, a self-organizing data pool might recognize that chemical and radiation data for an energy production environment are regularly accessed and extracted, while vibration and temperature data have not been used, in which case the data pool might automatically reorganize, such as by ceasing storage of vibration and/or temperature data, or by obtaining better sources of such data. This automated reorganization can also apply to data structures, such as promoting different data types, different data sources, different data structures, and the like, through progressive iteration and feedback.

**[0335]** In embodiments, a platform is provided having self-organization of data pools based on utilization and/or yield metrics. In embodiments, the data pools **4020** may be self-organizing data pools **4020**, such as being organized by cognitive capabilities as described throughout this disclosure. The data pools **4020** may self-organize in response to learning feedback **4012**, such as based on feedback of measures and results, including calculated in an analytic system **4018**. Organization may include determining what data or packages of data to store in a pool (such as representing particular combinations, permutations, aggregations, and the like), the structure of such data (such as in flat, hierarchical, linked, or other structures), the duration of storage, the nature of storage media (such as hard disks, flash memory, SSDs, network-based storage, or the like), the arrangement of storage bits, and other parameters. The content and nature of storage may be varied, such that a data pool **4020** may learn and adapt, such as based on states of the host system **112**, one or more data collection systems **102**, storage environment parameters (such as capacity, cost, and performance factors), data collection environment parameters, marketplace parameters, and many others. In embodiments, pools **4020** may learn and adapt, such as by variation of the above and other parameters in response to yield metrics (such as return on investment, optimization of power utilization, optimization of revenue, and the like).

**[0336]** Methods and systems are disclosed herein for training AI models based on industry-specific feedback, including training an AI model based on industry-specific feedback that reflects a measure of utilization, yield, or impact, and where the AI model operates on sensor data from an industrial environment. As noted above, these models may include operating models for industrial environments, machines, workflows, models for anticipating states, models for predicting fault and optimizing maintenance, models for self-organizing storage (on devices, in data pools and/or in the cloud), models for optimizing data transport (such as for optimizing network coding, network-condition-sensitive routing, and the like), models for optimizing data marketplaces, and many others.

**[0337]** In embodiments, a platform is provided having training AI models based on industry-specific feedback. In embodiments, the various embodiments of cognitive systems disclosed herein may take inputs and feedback from industry-specific and domain-specific sources **116** (such as relating to optimization of specific machines, devices, components, processes, and the like). Thus, learning and adaptation of storage organization, network usage, combination of sensor and input data, data pooling, data packaging, data pricing, and other features (such as for a marketplace **4102** or for other purposes of the host processing system **112**) may be configured by learning on the domain-specific feedback measures of a given environment or application, such as an application involving IoT devices (such as an industrial environment). This may include optimization of efficiency (such as in electrical, electromechanical, magnetic, physical, thermodynamic, chemical and other processes and systems), optimization of outputs (such as for production of energy, materials, products, services and other outputs), prediction, avoidance and mitigation of faults (such as in the aforementioned systems and processes), optimization of performance measures (such as returns on investment, yields, profits, margins, revenues and the like), reduction of costs (including labor costs, bandwidth costs, data costs, material input costs, licensing costs, and many others), optimization of benefits (such as relating to safety, satisfaction, health), optimization of work flows (such as optimizing time and resource allocation to processes), and others.

**[0338]** Methods and systems are disclosed herein for a self-organized swarm of industrial data collectors, including a self-organizing swarm of industrial data collectors that organize among themselves to optimize data collection based on the capabilities and conditions of the members of the swarm. Each member of the swarm may be configured with intelligence, and the ability to coordinate with other members. For example, a member of the swarm may track information about what data other members are handling, so that data collection activities, data storage, data processing, and data publishing can be allocated intelligently across the swarm, taking into account conditions of the environment, capabilities of the members of the swarm, operating parameters, rules (such as from a rules engine that governs the operation of the swarm), and current conditions of the members. For example, among four collectors, one that has relatively low current power levels (such as a low battery), might be temporarily allocated the role of publishing data, because it may receive a dose of power from a reader or interrogation device (such as an RFID reader) when it needs to publish the data. A second collector with good power levels and robust processing capability might be assigned more complex functions, such as processing data, fusing data, organizing the rest of the swarm (including self-organization under machine learning, such that the swarm is optimized over time, including by adjusting operating parameters, rules, and the like based on feedback), and the like. A third collector in the swarm with robust storage capabilities might be assigned the task of collecting and storing a category of data, such as vibration sensor data, that consumes considerable bandwidth. A fourth collector in the swarm, such as one with lower storage capabilities, might be assigned the role of collecting data that can usually be discarded, such as data on current diagnostic conditions, where only data on faults needs to be maintained and passed along. Members of a swarm may connect by peer-to-peer relationships by using a member as a "master" or "hub," or by having them connect in a series or ring, where each member passes along data (including commands) to the next, and is aware of the nature of the capabilities and commands that are suitable for the preceding and/or next member. The swarm may be used for allocation of storage across it (such as using memory of each memory as an aggregate data store. In these examples, the aggregate data store may support a distributed ledger, which may store transaction data, such as for transactions involving data collected by the swarm, transactions occurring in the industrial environment, or the like. In embodiments, the transaction data may also include data used to manage the swarm, the environment, or a machine or components thereof. The swarm may self-organize, either by machine learning capability disposed on one or more members of the swarm, or based on instructions from an external machine learning facility, which may optimize storage, data collection, data processing, data presentation, data transport, and other functions based on managing parameters that are relevant to each. The machine learning facility may start with an initial configuration and vary parameters of the swarm relevant to any of the foregoing (also including varying the membership of the swarm), such as iterating based on feedback to the machine learning facility regarding measures of success (such as utilization measures, efficiency measures, measures of success in prediction or anticipation of states, productivity measures, yield measures, profit measures, and others). Over time, the swarm may be optimized to a favorable configuration to achieve the desired measure of success for an owner, operator, or host of an industrial environment or a machine, component, or process thereof.

**[0339]** The swarm **4202** may be organized based on a hierarchical organization (such as where a master data collector **102** organizes and directs activities of one or more subservient data collectors **102**), a collaborative organization (such as where decision-making for the organization of the swarm **4202** is distributed among the data collectors **102** (such as using various models for decision-making, such as voting systems, points systems, least-cost routing systems, prioritization systems, and the like), and the like.) In embodiments, one or more of the data collectors **102** may have mobility capabilities, such as in cases where a data collector is disposed on or in a mobile robot, drone, mobile submersible, or the like, so that organization may include the location and positioning of the data collectors **102**. Data collection systems **102** may communicate with each other and with the host processing system **112**, including sharing an aggregate allocated storage space involving storage on or accessible to one or more of the collectors (which in embodiment may be treated as a unified storage space even if physically distributed, such as using virtualization capabilities). Organization may be automated based on one or more rules, models, conditions, processes, or the like (such as embodied or executed by conditional logic), and organization may be governed by policies, such as handled by the policy engine. Rules may be based on industry, application- and domain-specific objects, classes, events, workflows, processes, and systems, such as by setting up the swarm **4202** to collect selected types of data at designated places and times, such as coordinated with the foregoing. For example, the swarm **4202** may assign data collectors **102** to serially collect diagnostic, sensor, instrumentation and/or telematic data from each of a series of machines that execute

an industrial process (such as a robotic manufacturing process), such as at the time and location of the input to and output from each of those machines. In embodiments, self-organization may be cognitive, such as where the swarm varies one or more collection parameters and adapts the selection of parameters, weights applied to the parameters, or the like, over time. In examples, this may be in response to learning and feedback, such as from the learning feedback system **4012** that may be based on various feedback measures that may be determined by applying the analytic system **4018** (which in embodiments may reside on the swarm **4202**, the host processing system **112**, or a combination thereof) to data handled by the swarm **4202** or to other elements of the various embodiments disclosed herein (including marketplace elements and others). Thus, the swarm **4202** may display adaptive behavior, such as adapting to the current state **4020** or an anticipated state of its environment (accounting for marketplace behavior), behavior of various objects (such as IoT devices, machines, components, and systems), processes (including events, states, workflows, and the like), and other factors at a given time. Parameters that may be varied in a process of variation (such as in a neural net, self-organizing map, or the like), selection, promotion, or the like (such as those enabled by genetic programming or other AI-based techniques). Parameters that may be managed, varied, selected and adapted by cognitive, machine learning may include storage parameters (location, type, duration, amount, structure and the like across the swarm **4202**), network parameters (such as how the swarm **4202** is organized, such as in mesh, peer-to-peer, ring, serial, hierarchical and other network configurations as well as bandwidth utilization, data routing, network protocol selection, network coding type, and other networking parameters), security parameters (such as settings for various security applications and services), location and positioning parameters (such as routing movement of mobile data collectors **102** to locations, positioning and orienting collectors **102** and the like relative to points of data acquisition, relative to each other, and relative to locations where network availability may be favorable, among others), input selection parameters (such as input selection among sensors, input sources **116** and the like for each collector **102** and for the aggregate collection), data combination parameters (such as those for sensor fusion, input combination, multiplexing, mixing, layering, convolution, and other combinations), power parameters (such as parameters based on power levels and power availability for one or more collectors **102** or other objects, devices, or the like), states (including anticipated states and conditions of the swarm **4202**, individual collection systems **102**, the host processing system **112** or one or more objects in an environment), events, and many others. Feedback may be based on any of the kinds of feedback described herein, such that over time the swarm may adapt to its current and anticipated situation to achieve a wide range of desired objectives.

**[0340]** Methods and systems are disclosed herein for an industrial IoT distributed ledger, including a distributed ledger supporting the tracking of transactions executed in an automated data marketplace for industrial IoT data. A distributed ledger may distribute storage across devices, using a secure protocol, such as those used for cryptocurrencies (such as the Blockchain™ protocol used to support the Bitcoin™ currency). A ledger or similar transaction record, which may comprise a structure where each successive member of a chain stores data for previous transactions, and a competition can be established to determine which of alternative data stored data structures is "best" (such as being most complete), can be stored across data collectors, industrial machines or components, data pools, data marketplaces, cloud computing elements, servers, and/or on the IT infrastructure of an enterprise (such as an owner, operator or host of an industrial environment or of the systems disclosed herein). The ledger or transaction may be optimized by machine learning, such as to provide storage efficiency, security, redundancy, or the like.

**[0341]** In embodiments, the cognitive data marketplace **4102** may use a secure architecture for tracking and resolving transactions, such as a distributed ledger **4004**, wherein transactions in data packages are tracked in a chained, distributed data structure, such as a Blockchain™, allowing forensic analysis and validation where individual devices store a portion of the ledger representing transactions in data packages. The distributed ledger **4004** may be distributed to IoT devices, to data pools **4020**, to data collection systems **102**, and the like, so that transaction information can be verified without reliance on a single, central repository of information. The transaction system **4114** may be configured to store data in the distributed ledger **4004** and to retrieve data from it (and from constituent devices) in order to resolve transactions. Thus, a distributed ledger **4004** for handling transactions in data, such as for packages of IoT data, is provided. In embodiments, the self-organizing storage system **4028** may be used for optimizing storage of distributed ledger data, as well as for organizing storage of packages of data, such as IoT data, that can be presented in the marketplace **4102**.

**[0342]** Methods and systems are disclosed herein for a network-sensitive collector, including a network condition-sensitive, self-organizing, multi-sensor data collector that can optimize based on bandwidth, quality of service, pricing and/or other network conditions. Network sensitivity can include awareness of the price of data transport (such as allowing the system to pull or push data during off-peak periods or within the available parameters of paid data plans), the quality of the network (such as to avoid periods where errors are likely), the quality of environmental conditions (such as delaying transmission until signal quality is good, such as when a collector emerges from a shielded environment, avoiding wasting use of power when seeking a signal when shielded, such as by large metal structures typically of industrial environments), and the like.

**[0343]** Methods and systems are disclosed herein for a remotely organized universal data collector that can power up and down sensor interfaces based on need and/or conditions identified in an industrial data collection environment. For example, interfaces can recognize what sensors are available and interfaces and/or processors can be turned on to take input from such sensors, including hardware interfaces that allow the sensors to plug in to the data collector, wireless data interfaces (such as where the collector can ping the sensor, optionally providing some power via an interrogation signal), and software interfaces (such as for handling particular types of data). Thus, a collector that is capable of handling various kinds of data can be configured to adapt to the particular use in a given environment. In embodiments, configuration may be automatic or under machine learning, which may improve configuration by optimizing parameters based on feedback measures over time.

**[0344]** Methods and systems are disclosed herein for self-organizing storage for a multi-sensor data collector, including self-organizing storage for a multi-sensor data collector for industrial sensor data. Self-organizing storage may allocate storage based on application of machine learning, which may improve storage configuration based on feedback measure over time. Storage may be optimized by configuring what data types are used (e.g., byte-like structures, structures representing fused data from multiple sensors, structures representing statistics or measures calculated by applying mathematical functions on data, and the like), by configuring compression, by configuring data storage duration, by configuring write strategies (such as by striping data across multiple storage devices, using protocols where one device stores instructions for other devices in a chain, and the like), and by configuring storage hierarchies, such as by providing pre-calculated intermediate statistics to facilitate more rapid access to frequently accessed data items. Thus, highly intelligent storage systems may be configured and optimized, based on feedback, over time.

**[0345]** Methods and systems are disclosed herein for self-organizing network coding for a multi-sensor data network, including self-organizing network coding for a data network that transports data from multiple sensors in an industrial data collection environment. Network coding, including random linear network coding, can enable highly efficient and reliable transport of large amounts of data over various kinds of networks. Different network coding configurations can be selected, based on machine learning, to optimize network coding and other network transport characteristics based on network conditions, environmental conditions, and other factors, such as the nature of the data being transported, environmental conditions, operating conditions, and the like (including by training a network coding selection model over time based on feedback of measures of success, such as any of the measures described herein).

**[0346]** In embodiments, a platform is provided having a self-organizing network coding for multi-sensor data network. A cognitive system may vary one or more parameters for networking, such as network type selection (e.g., selecting among available local, cellular, satellite, Wi-Fi, Bluetooth™, NFC, Zigbee® and other networks), network selection (such as selecting a specific network, such as one that is known to have desired security features), network coding selection (such as selecting a type of network coding for efficient transport [such as random linear network coding, fixed coding, and others]), network timing selection (such as configuring delivery based on network pricing conditions, traffic and the like), network feature selection (such as selecting cognitive features, security features, and the like), network conditions (such as network quality based on current environmental or operation conditions), network feature selection (such as enabling available authentication, permission and similar systems), network protocol selection (such as among HTTP, IP, TCP/IP, cellular, satellite, serial, packet, streaming, and many other protocols), and others. Given bandwidth constraints, price variations, sensitivity to environmental factors, security concerns, and the like, selecting the optimal network configuration can be highly complex and situation dependent. The self-organizing networking system **4030** may vary combinations and permutations of these parameters while taking input from a learning feedback system **4012** such as using information from the analytic system **4018** about various measures of outcomes. In the many examples, outcomes may include overall system measures, analytic success measures, and local performance indicators. In embodiments, input from a learning feedback system **4012** may include information from various sensors and input sources **116**, information from the state system **4020** about states (such as events, environmental conditions, operating conditions, and many others, or other information) or taking other inputs. By variation and selection of alternative configurations of networking parameters in different states, the self-organizing networking system may find configurations that are well-adapted to the environment that is being monitored or controlled by the host system **112**, such as the instance where one or more data collection systems **102** are located and that are well-adapted to emerging network conditions. Thus, a self-organizing, network-condition-adaptive data collection system is provided.

**[0347]** Referring to FIG. **42**, a data collection system **102** may have one or more output interfaces and/or ports **4010**. These may include network ports and connections, application programming interfaces, and the like. Methods and systems are disclosed herein for a haptic or multi-sensory user interface, including a wearable haptic or multi-sensory user interface for an industrial sensor data collector, with vibration, heat, electrical, and/or sound outputs. For example, an interface may, based on a data structure configured to support the interface, be set up to provide a user with input or feedback, such as based on data from sensors in the environment. For example, if a fault condition based on a vibration data (such as resulting from a bearing being worn down, an axle being misaligned, or a resonance condition between machines) is detected, it can be presented in a haptic interface by vibration of an interface, such as shaking a wrist-worn device. Similarly, thermal data indicating overheating could be presented by warming or cooling a wearable device, such as while a worker is working on a machine and cannot necessarily look at a user interface. Similarly, electrical or magnetic data may be presented by a buzzing, and the like, such as to indicate presence of an open electrical connection or wire, etc. That is, a multi-sensory interface can intuitively help a user (such as a user with a wearable device) get a quick indication of what is going on in an environment, with the wearable interface having various modes of interaction that do not require a user to have eyes on a graphical UI, which may be difficult or impossible in many industrial environments where a user needs to keep an eye on the environment.

**[0348]** In embodiments, a platform is provided having a wearable haptic user interface for an industrial sensor data collector, with vibration, heat, electrical, and/or sound outputs. In embodiments, a haptic user interface **4302** is provided as an output for a data collection system **102**, such as a system for handling and providing information for vibration, heat, electrical, and/or sound outputs, such as to one or more components of the data collection system **102** or to another system, such as a wearable device, mobile phone, or the like. A data collection system **102** may be provided in a form factor suitable for delivering haptic input to a user, such as vibration, warming or cooling, buzzing, or the like, such as input disposed in headgear, an armband, a wristband or watch, a belt, an item of clothing, a uniform, or the like. In such cases, data collection systems **102** may be integrated with gear, uniforms, equipment, or the like worn by users, such as individuals responsible for operating or monitoring

an industrial environment. In embodiments, signals from various sensors or input sources (or selective combinations, permutations, mixes, and the like, as managed by one or more of the cognitive input selection systems **4004**, **4014**) may trigger haptic feedback. For example, if a nearby industrial machine is overheating, the haptic interface may alert a user by warming up, or by sending a signal to another device (such as a mobile phone) to warm up. If a system is experiencing unusual vibrations, the haptic interface may vibrate. Thus, through various forms of haptic input, a data collection system **102** may inform users of the need to attend to one or more devices, machines, or other factors (such as those in an industrial environment) without requiring them to read messages or divert their visual attention away from the task at hand. The haptic interface, and selection of what outputs should be provided, may be considered in the cognitive input selection systems **4004**, **4014**. For example, user behavior (such as responses to inputs) may be monitored and analyzed in an analytic system **4018**, and feedback may be provided through the learning feedback system **4012**, so that signals may be provided based on the right collection or package of sensors and inputs, at the right time and in the right manner, to optimize the effectiveness of the haptic system **4202**. This may include rule-based or model-based feedback (such as providing outputs that correspond in some logical fashion to the source data that is being conveyed). In embodiments, a cognitive haptic system may be provided, where selection of inputs or triggers for haptic feedback, selection of outputs, timing, intensity levels, durations, and other parameters (or weights applied to them) may be varied in a process of variation, promotion, and selection (such as using genetic programming) with feedback based on real world responses to feedback in actual situations or based on results of simulation and testing of user behavior. Thus, an adaptive haptic interface for a data collection system **102** is provided, which may learn and adapt feedback to satisfy requirements and to optimize the impact on user behavior, such as for overall system outcomes, data collection outcomes, analytic outcomes, and the like.

**[0349]** Methods and systems are disclosed herein for a presentation layer for AR/VR industrial glasses, where heat map elements are presented based on patterns and/or parameters in collected data. Methods and systems are disclosed herein for condition-sensitive, self-organized tuning of AR/VR interfaces based on feedback metrics and/or training in industrial environments. In embodiments, any of the data, measures, and the like described throughout this disclosure can be presented by visual elements, overlays, and the like for presentation in the AR/VR interfaces, such as in industrial glasses, on AR/VR interfaces on smart phones or tablets, on AR/VR interfaces on data collectors (which may be embodied in smart phones or tablets), on displays located on machines or components, and/or on displays located in industrial environments.

**[0350]** In embodiments, a platform is provided having heat maps displaying collected data for AR/VR. In embodiments, a platform is provided having heat maps **4204** displaying collected data from a data collection system **102** for providing input to an AR/VR interface **4208**. In embodiments, the heat map interface **4304** is provided as an output for a data collection system **102**, such as for handling and providing information for visualization of various sensor data and other data (such as map data, analog sensor data, and other data), such as to one or more components of the data collection system **102** or to another system, such as a mobile device, tablet, dashboard, computer, AR/VR device, or the like. A data collection system **102** may be provided in a form factor suitable for delivering visual input to a user, such as the presentation of a map that includes indicators of levels of analog and digital sensor data (such as data indicating levels of rotation, vibration, heating or cooling, pressure, and many other conditions). In such cases, data collection systems **102** may be integrated with equipment, or the like that are used by individuals responsible for operating or monitoring an industrial environment. In embodiments, signals from various sensors or input sources (or selective combinations, permutations, mixes, and the like, as managed by one or more of the cognitive input selection systems **4004**, **4014**) may provide input data to a heat map. Coordinates may include real world location coordinates (such as geo-location or location on a map of an environment), as well as other coordinates, such as time-based coordinates, frequency-based coordinates, or other coordinates that allow for representation of analog sensor signals, digital signals, input source information, and various combinations, in a map-based visualization, such that colors may represent varying levels of input along the relevant dimensions. For example, if a nearby industrial machine is overheating, the heat map interface may alert a user by showing a machine in bright red. If a system is experiencing unusual vibrations, the heat map interface may show a different color for a visual element for the machine, or it may cause an icon or display element representing the machine to vibrate in the interface, calling attention to the element. Clicking, touching, or otherwise interacting with the map can allow a user to drill down and see underlying sensor or input data that is used as an input to the heat map display. Thus, through various forms of display, a data collection system **102** may inform users of the need to attend to one or more devices, machines, or other factors, such as those in an industrial environment, without requiring them to read text-based messages or input. The heat map interface, and selection of what outputs should be provided, may be considered in the cognitive input selection systems **4004**, **4014**. For example, user behavior (such as responses to inputs or displays) may be monitored and analyzed in an analytic system **4018**, and feedback may be provided through the learning feedback system **4012**, so that signals may be provided based on the right collection or package of sensors and inputs, at the right time and in the right manner, to optimize the effectiveness of the heat map UI **4304**. This may include rule-based or model-based feedback (such as feedback providing outputs that correspond in some logical fashion to the source data that is being conveyed). In embodiments, a cognitive heat map system may be provided, where selection of inputs or triggers for heat map displays, selection of outputs, colors, visual representation elements, timing, intensity levels, durations and other parameters (or weights applied to them) may be varied in a process of variation, promotion and selection (such as selection using genetic programming) with feedback based on real world responses to feedback in actual situations or based on results of simulation and testing of user behavior. Thus, an adaptive heat map interface for a data collection system **102**, or data collected thereby **102**, or data handled by a host processing system **112**, is provided, which may learn and adapt feedback to satisfy requirements and to optimize the impact on user behavior and reaction,

such as for overall system outcomes, data collection outcomes, analytic outcomes, and the like.

**[0351]** In embodiments, a platform is provided having automatically tuned AR/VR visualization of data collected by a data collector. In embodiments, a platform is provided having an automatically tuned AR/VR visualization system **4308** for visualization of data collected by a data collection system **102**, such as the case where the data collection system **102** has an AR/VR interface **4208** or provides input to an AR/VR interface **4308** (such as a mobile phone positioned in a virtual reality or AR headset, a set of AR glasses, or the like). In embodiments, the AR/VR system **4308** is provided as an output interface of a data collection system **102**, such as a system for handling and providing information for visualization of various sensor data and other data (such as map data, analog sensor data, and other data), such as to one or more components of the data collection system **102** or to another system, such as a mobile device, tablet, dashboard, computer, AR/VR device, or the like. A data collection system **102** may be provided in a form factor suitable for delivering AR or VR visual, auditory, or other sensory input to a user, such as by presenting one or more displays such as 3D-realistic visualizations, objects, maps, camera overlays, or other overlay elements, maps and the like that include or correspond to indicators of levels of analog and digital sensor data (such as data indicating levels of rotation, vibration, heating or cooling, pressure and many other conditions, to input sources **116**, or the like). In such cases, data collection systems **102** may be integrated with equipment, or the like that are used by individuals responsible for operating or monitoring an industrial environment.

**[0352]** In embodiments, signals from various sensors or input sources (or selective combinations, permutations, mixes, and the like as managed by one or more of the cognitive input selection systems **4004**, **4014**) may provide input data to populate, configure, modify, or otherwise determine the AR/VR element. Visual elements may include a wide range of icons, map elements, menu elements, sliders, toggles, colors, shapes, sizes, and the like, for representation of analog sensor signals, digital signals, input source information, and various combinations. In many examples, colors, shapes, and sizes of visual overlay elements may represent varying levels of input along the relevant dimensions for a sensor or combination of sensors. In further examples, if a nearby industrial machine is overheating, an AR element may alert a user by showing an icon representing that type of machine in flashing red color in a portion of the display of a pair of AR glasses. If a system is experiencing unusual vibrations, a virtual reality interface showing visualization of the components of the machine (such as an overlay of a camera view of the machine with 3D visualization elements) may show a vibrating component in a highlighted color, with motion, or the like, to ensure the component stands out in a virtual reality environment being used to help a user monitor or service the machine. Clicking, touching, moving eyes toward, or otherwise interacting with a visual element in an AR/VR interface may allow a user to drilldown and see underlying sensor or input data that is used as an input to the display. Thus, through various forms of display, a data collection system **102** may inform users of the need to attend to one or more devices, machines, or other factors (such as in an industrial environment), without requiring them to read text-based messages or input or divert attention from the applicable environment (whether it is a real environment with AR features or a virtual environment, such as for simulation, training, or the like).

**[0353]** The AR/VR output interface **4208**, and selection and configuration of what outputs or displays should be provided, may be handled in the cognitive input selection systems **4004**, **4014**. For example, user behavior (such as responses to inputs or displays) may be monitored and analyzed in an analytic system **4018**, and feedback may be provided through the learning feedback system **4012**, so that AR/VR display signals may be provided based on the right collection or package of sensors and inputs, at the right time and in the right manner, to optimize the effectiveness of the AR/VR UI **4308**. This may include rule-based or model-based feedback (such as providing outputs that correspond in some logical fashion to the source data that is being conveyed). In embodiments, a cognitively tuned AR/VR interface control system **4308** may be provided, where selection of inputs or triggers for AR/VR display elements, selection of outputs (such as colors, visual representation elements, timing, intensity levels, durations and other parameters [or weights applied to them]) and other parameters of a VR/AR environment may be varied in a process of variation, promotion and selection (such as the use of genetic programming) with feedback based on real world responses in actual situations or based on results of simulation and testing of user behavior. Thus, an adaptive, tuned AR/VR interface for a data collection system **102**, or data collected thereby **102**, or data handled by a host processing system **112**, is provided, which may learn and adapt feedback to satisfy requirements and to optimize the impact on user behavior and reaction, such as for overall system outcomes, data collection outcomes, analytic outcomes, and the like.

**[0354]** As noted above, methods and systems are disclosed herein for continuous ultrasonic monitoring, including providing continuous ultrasonic monitoring of rotating elements and bearings of an energy production facility. Embodiments include using continuous ultrasonic monitoring of an industrial environment as a source for a cloud-deployed pattern recognizer. Embodiments include using continuous ultrasonic monitoring to provide updated state information to a state machine that is used as an input to a cloud-deployed pattern recognizer Embodiments include making available continuous ultrasonic monitoring information to a user based on a policy declared in a policy engine. Embodiments include storing continuous ultrasonic monitoring data with other data in a fused data structure on an industrial sensor device. Embodiments include making a stream of continuous ultrasonic monitoring data from an industrial environment available as a service from a data marketplace. Embodiments include feeding a stream of continuous ultrasonic monitoring data into a self-organizing data pool. Embodiments include training a machine learning model to monitor a continuous ultrasonic monitoring data stream where the model is based on a training set created from human analysis of such a data stream, and is improved based on data collected on performance in an industrial environment.

**[0355]** Embodiments include a swarm of data collectors that include at least one data collector for continuous ultrasonic monitoring of an industrial environment and at least one other type of data collector. Embodiments include using a distributed ledger to store time-series data from continuous ultrasonic monitoring across multiple devices. Embodi-

ments include collecting a stream of continuous ultrasonic data in a self-organizing data collector, a network-sensitive data collector, a remotely organized data collector, a data collector having self-organized storage and the like. Embodiments include using self-organizing network coding to transport a stream of ultrasonic data collected from an industrial environment. Embodiments include conveying an indicator of a parameter of a continuously collected ultrasonic data stream via an interface where the interface is one of a sensory interface of a wearable device, a heat map visual interface of a wearable device, an interface that operates with self-organized tuning of the interface layer, and the like.

**[0356]** As noted above, methods and systems are disclosed herein for cloud-based, machine pattern recognition based on fusion of remote analog industrial sensors. Embodiments include taking input from a plurality of analog sensors disposed in an industrial environment, multiplexing the sensors into a multiplexed data stream, feeding the data stream into a cloud-deployed machine learning facility, and training a model of the machine learning facility to recognize a defined pattern associated with the industrial environment. Embodiments include using a cloud-based pattern recognizer on input states from a state machine that characterizes states of an industrial environment. Embodiments include deploying policies by a policy engine that govern what data can be used by what users and for what purpose in cloud-based, machine learning. Embodiments include using a cloud-based platform to identify patterns in data across a plurality of data pools that contain data published from industrial sensors. Embodiments include training a model to identify preferred sensor sets to diagnose a condition of an industrial environment, where a training set is created by a human user and the model is improved based on feedback from data collected about conditions in an industrial environment.

**[0357]** Embodiments include a swarm of data collectors that is governed by a policy that is automatically propagated through the swarm. Embodiments include using a distributed ledger to store sensor fusion information across multiple devices. Embodiments include feeding input from a set of data collectors into a cloud-based pattern recognizer that uses data from multiple sensors for an industrial environment. The data collectors may be self-organizing data collectors, network-sensitive data collectors, remotely organized data collectors, a set of data collectors having self-organized storage, and the like. Embodiments include a system for data collection in an industrial environment with self-organizing network coding for data transport of data fused from multiple sensors in the environment. Embodiments include conveying information formed by fusing inputs from multiple sensors in an industrial data collection system in an interface such as a multi-sensory interface, a heat map interface, an interface that operates with self-organized tuning of the interface layer, and the like.

**[0358]** As noted above, methods and systems are disclosed herein for cloud-based, machine pattern analysis of state information from multiple analog industrial sensors to provide anticipated state information for an industrial system. Embodiments include using a policy engine to determine what state information can be used for cloud-based machine analysis. Embodiments include feeding inputs from multiple devices that have fused and on-device storage of multiple sensor streams into a cloud-based pattern recognizer to determine an anticipated state of an industrial environment. Embodiments include making an output, such as anticipated state information, from a cloud-based machine pattern recognizer that analyzes fused data from remote, analog industrial sensors available as a data service in a data marketplace. Embodiments include using a cloud-based pattern recognizer to determine an anticipated state of an industrial environment based on data collected from data pools that contain streams of information from machines in the environment. Embodiments include training a model to identify preferred state information to diagnose a condition of an industrial environment, where a training set is created by a human user and the model is improved based on feedback from data collected about conditions in an industrial environment. Embodiments include a swarm of data collectors that feeds a state machine that maintains current state information for an industrial environment. Embodiments include using a distributed ledger to store historical state information for fused sensor states a self-organizing data collector that feeds a state machine that maintains current state information for an industrial environment. Embodiments include a data collector that feeds a state machine that maintains current state information for an industrial environment where the data collector may be a network sensitive data collector, a remotely organized data collector, a data collector with self-organized storage, and the like. Embodiments include a system for data collection in an industrial environment with self-organizing network coding for data transport and maintains anticipated state information for the environment. Embodiments include conveying anticipated state information determined by machine learning in an industrial data collection system in an interface where the interface may be one or more of a multisensory interface, a heat map interface an interface that operates with self-organized tuning of the interface layer, and the like.

**[0359]** As noted above, methods and systems are disclosed herein for a cloud-based policy automation engine for IoT, with creation, deployment, and management of IoT devices, including a cloud-based policy automation engine for IoT, enabling creation, deployment and management of policies that apply to IoT devices. Policies can relate to data usage to an on-device storage system that stores fused data from multiple industrial sensors, or what data can be provided to whom in a self-organizing marketplace for IoT sensor data. Policies can govern how a self-organizing swarm or data collector should be organized for a particular industrial environment, how a network-sensitive data collector should use network bandwidth for a particular industrial environment, how a remotely organized data collector should collect, and make available, data relating to a specified industrial environment, or how a data collector should self-organize storage for a particular industrial environment. Policies can be deployed across a set of self-organizing pools of data that contain data streamed from industrial sensing devices to govern use of data from the pools or stored on a device that governs use of storage capabilities of the device for a distributed ledger. Embodiments include training a model to determine what policies should be deployed in an industrial data collection system. Embodiments include a system for data collection in an industrial environment with a policy engine for deploying policy within the system and, optionally, self-organizing network coding for data transport, wherein in certain embodiments, a policy applies to how data will be presented in a multi-

sensory interface, a heat map visual interface, or in an interface that operates with self-organized tuning of the interface layer.

**[0360]** As noted above, methods and systems are disclosed herein for on-device sensor fusion and data storage for industrial IoT devices, such as an industrial data collector, including self-organizing, remotely organized, or network-sensitive industrial data collectors, where data from multiple sensors is multiplexed at the device for storage of a fused data stream. Embodiments include a self-organizing marketplace that presents fused sensor data that is extracted from on-device storage of IoT devices. Embodiments include streaming fused sensor information from multiple industrial sensors and from an on-device data storage facility to a data pool. Embodiments include training a model to determine what data should be stored on a device in a data collection environment. Embodiments include a self-organizing swarm of industrial data collectors that organize among themselves to optimize data collection, where at least some of the data collectors have on-device storage of fused data from multiple sensors. Embodiments include storing distributed ledger information with fused sensor information on an industrial IoT device. Embodiments include a system for data collection with on-device sensor fusion, such as of industrial sensor data and, optionally, self-organizing network coding for data transport, where data structures are stored to support alternative, multi-sensory modes of presentation, visual heat map modes of presentation, and/or an interface that operates with self-organized tuning of the interface layer.

**[0361]** As noted above, methods and systems are disclosed herein for a self-organizing data marketplace for industrial IoT data, where available data elements are organized in the marketplace for consumption by consumers based on training a self-organizing facility with a training set and feedback from measures of marketplace success. Embodiments include organizing a set of data pools in a self-organizing data marketplace based on utilization metrics for the data pools. Embodiments include training a model to determine pricing for data in a data marketplace. The data marketplace is fed with data streams from a self-organizing swarm of industrial data collectors, a set of industrial data collectors that have self-organizing storage, or self-organizing, network-sensitive, or remotely organized industrial data collectors. Embodiments include using a distributed ledger to store transactional data for a self-organizing marketplace for industrial IoT data. Embodiments include using self-organizing network coding for data transport to a marketplace for sensor data collected in industrial environments. Embodiments include providing a library of data structures suitable for presenting data in alternative, multi-sensory interface modes in a data marketplace, in heat map visualization, and/or in interfaces that operate with self-organized tuning of the interface layer.

**[0362]** As noted above, methods and systems are disclosed herein for self-organizing data pools such as those that self-organize based on utilization and/or yield metrics that may be tracked for a plurality of data pools. In embodiments, the pools contain data from self-organizing data collectors. Embodiments include training a model to present the most valuable data in a data marketplace, where training is based on industry-specific measures of success. Embodiments include populating a set of self-organizing data pools with data from a self-organizing swarm of data collectors. Embodiments include using a distributed ledger to store transactional information for data that is deployed in data pools, where the distributed ledger is distributed across the data pools. Embodiments include populating a set of self-organizing data pools with data from a set of network-sensitive or remotely organized data collectors or a set of data collectors having self-organizing storage. Embodiments include a system for data collection in an industrial environment with self-organizing pools for data storage and self-organizing network coding for data transport, such as a system that includes a source data structure for supporting data presentation in a multi-sensory interface, in a heat map interface, and/or in an interface that operates with self-organized tuning of the interface layer.

**[0363]** As noted above, methods and systems are disclosed herein for training AI models based on industry-specific feedback, such as that reflects a measure of utilization, yield, or impact, where the AI model operates on sensor data from an industrial environment. Embodiments include training a swarm of data collectors, or data collectors, such as remotely organized, self-organizing, or network-sensitive data collectors, based on industry-specific feedback or network and industrial conditions in an industrial environment, such as to configure storage. Embodiments include training an AI model to identify and use available storage locations in an industrial environment for storing distributed ledger information. Embodiments include training a remote organizer for a remotely organized data collector based on industry-specific feedback measures. Embodiments include a system for data collection in an industrial environment with cloud-based training of a network coding model for organizing network coding for data transport or a facility that manages presentation of data in a multi-sensory interface, in a heat map interface, and/or in an interface that operates with self-organized tuning of the interface layer.

**[0364]** As noted above, methods and systems are disclosed herein for a self-organized swarm of industrial data collectors that organize among themselves to optimize data collection based on the capabilities and conditions of the members of the swarm. Embodiments include deploying distributed ledger data structures across a swarm of data. Data collectors may be network-sensitive data collectors configured for remote organization or have self-organizing storage. Systems for data collection in an industrial environment with a swarm can include a self-organizing network coding for data transport. Systems include swarms that relay information for use in a multi-sensory interface, in a heat map interface, and/or in an interface that operates with self-organized tuning of the interface layer.

**[0365]** As noted above, methods and systems are disclosed herein for an industrial IoT distributed ledger, including a distributed ledger supporting the tracking of transactions executed in an automated data marketplace for industrial IoT data. Embodiments include a self-organizing data collector that is configured to distribute collected information to a distributed ledger. Embodiments include a network-sensitive data collector that is configured to distribute collected information to a distributed ledger based on network conditions. Embodiments include a remotely organized data collector that is configured to distribute collected information to a distributed ledger based on intelligent, remote management of the distribution. Embodiments include a data collector with self-organizing local storage that is configured to distribute collected information to a distrib-

uted ledger. Embodiments include a system for data collection in an industrial environment using a distributed ledger for data storage and self-organizing network coding for data transport, wherein data storage is of a data structure supporting a haptic interface for data presentation, a heat map interface for data presentation, and/or an interface that operates with self-organized tuning of the interface layer.

**[0366]** As noted above, methods and systems are disclosed herein for a self-organizing collector, including a self-organizing, multi-sensor data collector that can optimize data collection, power and/or yield based on conditions in its environment, and is optionally responsive to remote organization Embodiments include a self-organizing data collector that organizes at least in part based on network conditions. Embodiments include a self-organizing data collector with self-organizing storage for data collected in an industrial data collection environment. Embodiments include a system for data collection in an industrial environment with self-organizing data collection and self-organizing network coding for data transport. Embodiments include a system for data collection in an industrial environment with a self-organizing data collector that feeds a data structure supporting a haptic or multi-sensory wearable interface for data presentation, a heat map interface for data presentation, and/or an interface that operates with self-organized tuning of the interface layer.

**[0367]** As noted above, methods and systems are disclosed herein for a network-sensitive collector, including a network condition-sensitive, self-organizing, multi-sensor data collector that can optimize based on bandwidth, quality of service, pricing, and/or other network conditions. Embodiments include a remotely organized, network condition-sensitive universal data collector that can power up and down sensor interfaces based on need and/or conditions identified in an industrial data collection environment, including network conditions. Embodiments include a network-condition sensitive data collector with self-organizing storage for data collected in an industrial data collection environment. Embodiments include a network-condition sensitive data collector with self-organizing network coding for data transport in an industrial data collection environment. Embodiments include a system for data collection in an industrial environment with a network-sensitive data collector that relays a data structure supporting a haptic wearable interface for data presentation, a heat map interface for data presentation, and/or an interface that operates with self-organized tuning of the interface layer.

**[0368]** As noted above, methods and systems are disclosed herein for a remotely organized universal data collector that can power up and down sensor interfaces based on need and/or conditions identified in an industrial data collection environment. Embodiments include a remotely organized universal data collector with self-organizing storage for data collected in an industrial data collection environment. Embodiments include a system for data collection in an industrial environment with remote control of data collection and self-organizing network coding for data transport. Embodiments include a remotely organized data collector for storing sensor data and delivering instructions for use of the data in a haptic or multi-sensory wearable interface, in a heat map visual interface, and/or in an interface that operates with self-organized tuning of the interface layer.

**[0369]** As noted above, methods and systems are disclosed herein for self-organizing storage for a multi-sensor data collector, including self-organizing storage for a multi-sensor data collector for industrial sensor data. Embodiments include a system for data collection in an industrial environment with self-organizing data storage and self-organizing network coding for data transport. Embodiments include a data collector with self-organizing storage for storing sensor data and instructions for translating the data for use in a haptic wearable interface, in a heat map presentation interface, and/or in an interface that operates with self-organized tuning of the interface layer.

**[0370]** As noted above, methods and systems are disclosed herein for self-organizing network coding for a multi-sensor data network, including self-organizing network coding for a data network that transports data from multiple sensors in an industrial data collection environment. The system includes a data structure supporting a haptic wearable interface for data presentation, a heat map interface for data presentation, and/or self-organized tuning of an interface layer for data presentation.

**[0371]** As noted above, methods and systems are disclosed herein for a haptic or multi-sensory user interface, including a wearable haptic or multi-sensory user interface for an industrial sensor data collector, with vibration, heat, electrical, and/or sound outputs. Embodiments include a wearable haptic user interface for conveying industrial state information from a data collector, with vibration, heat, electrical, and/or sound outputs. The wearable also has a visual presentation layer for presenting a heat map that indicates a parameter of the data. Embodiments include condition-sensitive, self-organized tuning of AR/VR interfaces and multi-sensory interfaces based on feedback metrics and/or training in industrial environments.

**[0372]** As noted above, methods and systems are disclosed herein for a presentation layer for AR/VR industrial glasses, where heat map elements are presented based on patterns and/or parameters in collected data. Embodiments include condition-sensitive, self-organized tuning of a heat map AR/VR interface based on feedback metrics and/or training in industrial environments. As noted above, methods and systems are disclosed herein for condition-sensitive, self-organized tuning of AR/VR interfaces based on feedback metrics and/or training in industrial environments.

**[0373]** The following illustrative clauses describe certain embodiments of the present disclosure. The data collection system mentioned in the following disclosure may be a local data collection system **102**, a host processing system **112** (e.g., using a cloud platform), or a combination of a local system and a host system. In embodiments, a data collection system or data collection and processing system is provided having the use of an analog crosspoint switch for collecting data having variable groups of analog sensor inputs and, in some embodiments, having IP front-end-end signal conditioning on a multiplexer for improved signal-to-noise ratio, multiplexer continuous monitoring alarming features, the use of distributed CPLD chips with a dedicated bus for logic control of multiple MUX and data acquisition sections, high-amperage input capability using solid state relays and design topology, power-down capability of at least one of an analog sensor channel and of a component board, unique electrostatic protection for trigger and vibration inputs, and/or precise voltage reference for A/D zero reference.

**[0374]** In embodiments, a data collection and processing system is provided having the use of an analog crosspoint switch for collecting data having variable groups of analog

sensor inputs and having a phase-lock loop band-pass tracking filter for obtaining slow-speed RPMs and phase information, digital derivation of phase relative to input and trigger channels using on-board timers, a peak-detector for auto-scaling that is routed into a separate analog-to-digital converter for peak detection, the routing of a trigger channel that is either raw or buffered into other analog channels, the use of higher input oversampling for delta-sigma A/D for lower sampling rate outputs to minimize AA filter requirements, and/or the use of a CPLD as a clock-divider for a delta-sigma analog-to-digital converter to achieve lower sampling rates without the need for digital resampling.

**[0375]** In embodiments, a data collection and processing system is provided having the use of an analog crosspoint switch for collecting data having variable groups of analog sensor inputs and having long blocks of data at a high-sampling rate, as opposed to multiple sets of data taken at different sampling rates, storage of calibration data with a maintenance history on-board card set, a rapid route creation capability using hierarchical templates, intelligent management of data collection bands, and/or a neural net expert system using intelligent management of data collection bands.

**[0376]** In embodiments, a data collection and processing system is provided having the use of an analog crosspoint switch for collecting data having variable groups of analog sensor inputs and having use of a database hierarchy in sensor data analysis, an expert system GUI graphical approach to defining intelligent data collection bands and diagnoses for the expert system, a graphical approach for back-calculation definition, proposed bearing analysis methods, torsional vibration detection/analysis utilizing transitory signal analysis, and/or improved integration using both analog and digital methods.

**[0377]** In embodiments, a data collection and processing system is provided having the use of an analog crosspoint switch for collecting data having variable groups of analog sensor inputs and having adaptive scheduling techniques for continuous monitoring of analog data in a local environment, data acquisition parking features, a self-sufficient data acquisition box, SD card storage, extended onboard statistical capabilities for continuous monitoring, the use of ambient, local and vibration noise for prediction, smart route changes based on incoming data or alarms to enable simultaneous dynamic data for analysis or correlation, smart ODS and transfer functions, a hierarchical multiplexer, identification of sensor overload, and/or RF identification and an inclinometer.

**[0378]** In embodiments, a data collection and processing system is provided having the use of an analog crosspoint switch for collecting data having variable groups of analog sensor inputs and having continuous ultrasonic monitoring, cloud-based, machine pattern recognition based on the fusion of remote, analog industrial sensors, cloud-based, machine pattern analysis of state information from multiple analog industrial sensors to provide anticipated state information for an industrial system, cloud-based policy automation engine for IoT, with creation, deployment, and management of IoT devices, on-device sensor fusion and data storage for industrial IoT devices, a self-organizing data marketplace for industrial IoT data, self-organization of data pools based on utilization and/or yield metrics, training AI models based on industry-specific feedback, a self-organized swarm of industrial data collectors, an IoT distributed ledger, a self-organizing collector, a network-sensitive collector, a remotely organized collector, a self-organizing storage for a multi-sensor data collector, a self-organizing network coding for multi-sensor data network, a wearable haptic user interface for an industrial sensor data collector, with vibration, heat, electrical, and/or sound outputs, heat maps displaying collected data for AR/VR, and/or automatically tuned AR/VR visualization of data collected by a data collector.

**[0379]** In embodiments, a data collection and processing system is provided having IP front-end signal conditioning on a multiplexer for improved signal-to-noise ratio. In embodiments, a data collection and processing system is provided having IP front-end signal conditioning on a multiplexer for improved signal-to-noise ratio and having at least one of: multiplexer continuous monitoring alarming features; IP front-end signal conditioning on a multiplexer for improved signal-to-noise ratio; the use of distributed CPLD chips with dedicated bus for logic control of multiple MUX and data acquisition sections. In embodiments, a data collection and processing system is provided having IP front-end signal conditioning on a multiplexer for improved signal-to-noise ratio and having at least one of: high-amperage input capability using solid state relays and design topology; power-down capability of at least one analog sensor channel and of a component board; unique electrostatic protection for trigger and vibration inputs; precise voltage reference for A/D zero reference; and a phase-lock loop band-pass tracking filter for obtaining slow-speed RPMs and phase information. In embodiments, a data collection and processing system is provided having IP front-end signal conditioning on a multiplexer for improved signal-to-noise ratio and having at least one of: digital derivation of phase relative to input and trigger channels using on-board timers; a peak-detector for auto-scaling that is routed into a separate analog-to-digital converter for peak detection; routing of a trigger channel that is either raw or buffered into other analog channels; the use of higher input oversampling for delta-sigma A/D for lower sampling rate outputs to minimize AA filter requirements; and the use of a CPLD as a clock-divider for a delta-sigma analog-to-digital converter to achieve lower sampling rates without the need for digital resampling. In embodiments, a data collection and processing system is provided having IP front-end signal conditioning on a multiplexer for improved signal-to-noise ratio and having at least one of: long blocks of data at a high-sampling rate as opposed to multiple sets of data taken at different sampling rates; storage of calibration data with a maintenance history on-board card set; a rapid route creation capability using hierarchical templates; intelligent management of data collection bands; and a neural net expert system using intelligent management of data collection bands. In embodiments, a data collection and processing system is provided having IP front-end signal conditioning on a multiplexer for improved signal-to-noise ratio and having at least one of: use of a database hierarchy in sensor data analysis; an expert system GUI graphical approach to defining intelligent data collection bands and diagnoses for the expert system; and a graphical approach for back-calculation definition. In embodiments, a data collection and processing system is provided having IP front-end signal conditioning on a multiplexer for improved signal-to-noise ratio and having at least one of: proposed bearing analysis methods; torsional vibration detection/analysis utilizing

transitory signal; improved integration using both analog and digital methods; adaptive scheduling techniques for continuous monitoring of analog data in a local environment; data acquisition parking features; a self-sufficient data acquisition box; and SD card storage. In embodiments, a data collection and processing system is provided having IP front-end signal conditioning on a multiplexer for improved signal-to-noise ratio and having at least one of: extended onboard statistical capabilities for continuous monitoring; the use of ambient, local, and vibration noise for prediction; smart route changes based on incoming data or alarms to enable simultaneous dynamic data for analysis or correlation; smart ODS and transfer functions; and a hierarchical multiplexer. In embodiments, a data collection and processing system is provided having IP front-end signal conditioning on a multiplexer for improved signal-to-noise ratio and having at least one of: identification of sensor overload; RF identification and an inclinometer; continuous ultrasonic monitoring; machine pattern recognition based on the fusion of remote, analog industrial sensors; and cloud-based, machine pattern analysis of state information from multiple analog industrial sensors to provide anticipated state information for an industrial system. In embodiments, a data collection and processing system is provided having IP front-end signal conditioning on a multiplexer for improved signal-to-noise ratio and having at least one of: cloud-based policy automation engine for IoT, with creation, deployment, and management of IoT devices; on-device sensor fusion and data storage for industrial IoT devices; a self-organizing data marketplace for industrial IoT data; and self-organization of data pools based on utilization and/or yield metrics. In embodiments, a data collection and processing system is provided having IP front-end signal conditioning on a multiplexer for improved signal-to-noise ratio and having at least one of: training AI models based on industry-specific feedback; a self-organized swarm of industrial data collectors; an IoT distributed ledger; a self-organizing collector; and a network-sensitive collector. In embodiments, a data collection and processing system is provided having IP front-end signal conditioning on a multiplexer for improved signal-to-noise ratio and having at least one of: a remotely organized collector; a self-organizing storage for a multi-sensor data collector; a self-organizing network coding for multi-sensor data network; a wearable haptic user interface for an industrial sensor data collector, with vibration, heat, electrical, and/or sound outputs; heat maps displaying collected data for AR/VR; and automatically tuned AR/VR visualization of data collected by a data collector.

**[0380]** In embodiments, a data collection and processing system is provided having multiplexer continuous monitoring alarming features. In embodiments, a data collection and processing system is provided having multiplexer continuous monitoring alarming features and having at least one of: the use of distributed CPLD chips with dedicated bus for logic control of multiple MUX and data acquisition sections; high-amperage input capability using solid state relays and design topology; power-down capability of at least one of an analog sensor channel and/or of a component board; unique electrostatic protection for trigger and vibration inputs; and precise voltage reference for A/D zero reference. In embodiments, a data collection and processing system is provided having multiplexer continuous monitoring alarming features and having at least one of: a phase-lock loop band-pass tracking filter for obtaining slow-speed RPMs and phase information; digital derivation of phase relative to input and trigger channels using on-board timers; a peak-detector for auto-scaling that is routed into a separate analog-to-digital converter for peak detection; and routing of a trigger channel that is either raw or buffered into other analog channels. In embodiments, a data collection and processing system is provided having multiplexer continuous monitoring alarming features and having at least one of: the use of higher input oversampling for delta-sigma A/D for lower sampling rate outputs to minimize AA filter requirements; the use of a CPLD as a clock-divider for a delta-sigma analog-to-digital converter to achieve lower sampling rates without the need for digital resampling; long blocks of data at a high-sampling rate as opposed to multiple sets of data taken at different sampling rates; storage of calibration data with a maintenance history on-board card set; and a rapid route creation capability using hierarchical templates. In embodiments, a data collection and processing system is provided having multiplexer continuous monitoring alarming features and having at least one of: intelligent management of data collection bands; a neural net expert system using intelligent management of data collection bands; use of a database hierarchy in sensor data analysis; and an expert system GUI graphical approach to defining intelligent data collection bands and diagnoses for the expert system. In embodiments, a data collection and processing system is provided having multiplexer continuous monitoring alarming features and having at least one of: a graphical approach for back-calculation definition; proposed bearing analysis methods; torsional vibration detection/analysis utilizing transitory signal analysis; and improved integration using both analog and digital methods. In embodiments, a data collection and processing system is provided having multiplexer continuous monitoring alarming features and having at least one of adaptive scheduling techniques for continuous monitoring of analog data in a local environment; data acquisition parking features; a self-sufficient data acquisition box; and SD card storage. In embodiments, a data collection and processing system is provided having multiplexer continuous monitoring alarming features and having at least one of: extended onboard statistical capabilities for continuous monitoring; the use of ambient, local and vibration noise for prediction; smart route changes based on incoming data or alarms to enable simultaneous dynamic data for analysis or correlation; and smart ODS and transfer functions. In embodiments, a data collection and processing system is provided having multiplexer continuous monitoring alarming features and having at least one of: a hierarchical multiplexer; identification of sensor overload; RF identification, and an inclinometer; cloud-based, machine pattern recognition based on the fusion of remote, analog industrial sensors; and machine pattern analysis of state information from multiple analog industrial sensors to provide anticipated state information for an industrial system. In embodiments, a data collection and processing system is provided having multiplexer continuous monitoring alarming features and having at least one of: cloud-based policy automation engine for IoT, with creation, deployment, and management of IoT devices; on-device sensor fusion and data storage for industrial IoT devices; a self-organizing data marketplace for industrial IoT data; self-organization of data pools based on utilization and/or yield metrics; and training AI models based on industry-specific feedback. In embodiments, a data

collection and processing system is provided having multiplexer continuous monitoring alarming features and having at least one of: a self-organized swarm of industrial data collectors; an IoT distributed ledger; a self-organizing collector; a network-sensitive collector; and a remotely organized collector. In embodiments, a data collection and processing system is provided having multiplexer continuous monitoring alarming features and having at least one of: a self-organizing storage for a multi-sensor data collector; and a self-organizing network coding for multi-sensor data network. In embodiments, a data collection and processing system is provided having multiplexer continuous monitoring alarming features and having at least one of: a wearable haptic user interface for an industrial sensor data collector, with vibration, heat, electrical, and/or sound outputs; heat maps displaying collected data for AR/VR; and automatically tuned AR/VR visualization of data collected by a data collector.

**[0381]** In embodiments, a data collection and processing system is provided having the use of distributed CPLD chips with dedicated bus for logic control of multiple MUX and data acquisition sections. In embodiments, a data collection and processing system is provided having the use of distributed CPLD chips with dedicated bus for logic control of multiple MUX and data acquisition sections and having high-amperage input capability using solid state relays and design topology. In embodiments, a data collection and processing system is provided having the use of distributed CPLD chips with dedicated bus for logic control of multiple MUX and data acquisition sections and having power-down capability of at least one of an analog sensor channel and of a component board. In embodiments, a data collection and processing system is provided having the use of distributed CPLD chips with dedicated bus for logic control of multiple MUX and data acquisition sections and having unique electrostatic protection for trigger and vibration inputs. In embodiments, a data collection and processing system is provided having the use of distributed CPLD chips with dedicated bus for logic control of multiple MUX and data acquisition sections and having precise voltage reference for A/D zero reference. In embodiments, a data collection and processing system is provided having the use of distributed CPLD chips with dedicated bus for logic control of multiple MUX and data acquisition sections and having a phase-lock loop band-pass tracking filter for obtaining slow-speed RPMs and phase information. In embodiments, a data collection and processing system is provided having the use of distributed CPLD chips with dedicated bus for logic control of multiple MUX and data acquisition sections and having digital derivation of phase relative to input and trigger channels using on-board timers. In embodiments, a data collection and processing system is provided having the use of distributed CPLD chips with dedicated bus for logic control of multiple MUX and data acquisition sections and having a peak-detector for auto-scaling that is routed into a separate analog-to-digital converter for peak detection. In embodiments, a data collection and processing system is provided having the use of distributed CPLD chips with dedicated bus for logic control of multiple MUX and data acquisition sections and having routing of a trigger channel that is either raw or buffered into other analog channels. In embodiments, a data collection and processing system is provided having the use of distributed CPLD chips with dedicated bus for logic control of multiple MUX and data acquisition sections and having the use of higher input oversampling for delta-sigma A/D for lower sampling rate outputs to minimize AA filter requirements. In embodiments, a data collection and processing system is provided having the use of distributed CPLD chips with dedicated bus for logic control of multiple MUX and data acquisition sections and having the use of a CPLD as a clock-divider for a delta-sigma analog-to-digital converter to achieve lower sampling rates without the need for digital resampling. In embodiments, a data collection and processing system is provided having the use of distributed CPLD chips with dedicated bus for logic control of multiple MUX and data acquisition sections and having long blocks of data at a high-sampling rate as opposed to multiple sets of data taken at different sampling rates. In embodiments, a data collection and processing system is provided having the use of distributed CPLD chips with dedicated bus for logic control of multiple MUX and data acquisition sections and having storage of calibration data with a maintenance history on-board card set. In embodiments, a data collection and processing system is provided having the use of distributed CPLD chips with dedicated bus for logic control of multiple MUX and data acquisition sections and having a rapid route creation capability using hierarchical templates. In embodiments, a data collection and processing system is provided having the use of distributed CPLD chips with dedicated bus for logic control of multiple MUX and data acquisition sections and having intelligent management of data collection bands. In embodiments, a data collection and processing system is provided having the use of distributed CPLD chips with dedicated bus for logic control of multiple MUX and data acquisition sections and having a neural net expert system using intelligent management of data collection bands. In embodiments, a data collection and processing system is provided having the use of distributed CPLD chips with dedicated bus for logic control of multiple MUX and data acquisition sections and having use of a database hierarchy in sensor data analysis. In embodiments, a data collection and processing system is provided having the use of distributed CPLD chips with dedicated bus for logic control of multiple MUX and data acquisition sections and having an expert system GUI graphical approach to defining intelligent data collection bands and diagnoses for the expert system. In embodiments, a data collection and processing system is provided having the use of distributed CPLD chips with dedicated bus for logic control of multiple MUX and data acquisition sections and having a graphical approach for back-calculation definition. In embodiments, a data collection and processing system is provided having the use of distributed CPLD chips with dedicated bus for logic control of multiple MUX and data acquisition sections and having proposed bearing analysis methods. In embodiments, a data collection and processing system is provided having the use of distributed CPLD chips with dedicated bus for logic control of multiple MUX and data acquisition sections and having torsional vibration detection/analysis utilizing transitory signal analysis. In embodiments, a data collection and processing system is provided having the use of distributed CPLD chips with dedicated bus for logic control of multiple MUX and data acquisition sections and having improved integration using both analog and digital methods. In embodiments, a data collection and processing system is provided having the use of distributed CPLD chips with dedicated bus for logic control of multiple MUX and data

acquisition sections and having adaptive scheduling techniques for continuous monitoring of analog data in a local environment. In embodiments, a data collection and processing system is provided having the use of distributed CPLD chips with dedicated bus for logic control of multiple MUX and data acquisition sections and having data acquisition parking features. In embodiments, a data collection and processing system is provided having the use of distributed CPLD chips with dedicated bus for logic control of multiple MUX and data acquisition sections and having a self-sufficient data acquisition box. In embodiments, a data collection and processing system is provided having the use of distributed CPLD chips with dedicated bus for logic control of multiple MUX and data acquisition sections and having SD card storage. In embodiments, a data collection and processing system is provided having the use of distributed CPLD chips with dedicated bus for logic control of multiple MUX and data acquisition sections and having extended onboard statistical capabilities for continuous monitoring. In embodiments, a data collection and processing system is provided having the use of distributed CPLD chips with dedicated bus for logic control of multiple MUX and data acquisition sections and having the use of ambient, local and vibration noise for prediction. In embodiments, a data collection and processing system is provided having the use of distributed CPLD chips with dedicated bus for logic control of multiple MUX and data acquisition sections and having smart route changes based on incoming data or alarms to enable simultaneous dynamic data for analysis or correlation. In embodiments, a data collection and processing system is provided having the use of distributed CPLD chips with dedicated bus for logic control of multiple MUX and data acquisition sections and having smart ODS and transfer functions. In embodiments, a data collection and processing system is provided having the use of distributed CPLD chips with dedicated bus for logic control of multiple MUX and data acquisition sections and having a hierarchical multiplexer. In embodiments, a data collection and processing system is provided having the use of distributed CPLD chips with dedicated bus for logic control of multiple MUX and data acquisition sections and having identification of sensor overload. In embodiments, a data collection and processing system is provided having the use of distributed CPLD chips with dedicated bus for logic control of multiple MUX and data acquisition sections and having RF identification and an inclinometer. In embodiments, a data collection and processing system is provided having the use of distributed CPLD chips with dedicated bus for logic control of multiple MUX and data acquisition sections and having continuous ultrasonic monitoring. In embodiments, a data collection and processing system is provided having the use of distributed CPLD chips with dedicated bus for logic control of multiple MUX and data acquisition sections and having cloud-based, machine pattern recognition based on fusion of remote, analog industrial sensors. In embodiments, a data collection and processing system is provided having the use of distributed CPLD chips with dedicated bus for logic control of multiple MUX and data acquisition sections and having cloud-based, machine pattern analysis of state information from multiple analog industrial sensors to provide anticipated state information for an industrial system. In embodiments, a data collection and processing system is provided having the use of distributed CPLD chips with dedicated bus for logic control of multiple MUX and data acquisition sections and having cloud-based policy automation engine for IoT, with creation, deployment, and management of IoT devices. In embodiments, a data collection and processing system is provided having the use of distributed CPLD chips with dedicated bus for logic control of multiple MUX and data acquisition sections and having on-device sensor fusion and data storage for industrial IoT devices. In embodiments, a data collection and processing system is provided having the use of distributed CPLD chips with dedicated bus for logic control of multiple MUX and data acquisition sections and having a self-organizing data marketplace for industrial IoT data. In embodiments, a data collection and processing system is provided having the use of distributed CPLD chips with dedicated bus for logic control of multiple MUX and data acquisition sections and having self-organization of data pools based on utilization and/or yield metrics. In embodiments, a data collection and processing system is provided having the use of distributed CPLD chips with dedicated bus for logic control of multiple MUX and data acquisition sections and having training AI models based on industry-specific feedback. In embodiments, a data collection and processing system is provided having the use of distributed CPLD chips with dedicated bus for logic control of multiple MUX and data acquisition sections and having a self-organized swarm of industrial data collectors. In embodiments, a data collection and processing system is provided having the use of distributed CPLD chips with dedicated bus for logic control of multiple MUX and data acquisition sections and having an IoT distributed ledger. In embodiments, a data collection and processing system is provided having the use of distributed CPLD chips with dedicated bus for logic control of multiple MUX and data acquisition sections and having a self-organizing collector. In embodiments, a data collection and processing system is provided having the use of distributed CPLD chips with dedicated bus for logic control of multiple MUX and data acquisition sections and having a network-sensitive collector. In embodiments, a data collection and processing system is provided having the use of distributed CPLD chips with dedicated bus for logic control of multiple MUX and data acquisition sections and having a remotely organized collector. In embodiments, a data collection and processing system is provided having the use of distributed CPLD chips with dedicated bus for logic control of multiple MUX and data acquisition sections and having a self-organizing storage for a multi-sensor data collector. In embodiments, a data collection and processing system is provided having the use of distributed CPLD chips with dedicated bus for logic control of multiple MUX and data acquisition sections and having a self-organizing network coding for multi-sensor data network. In embodiments, a data collection and processing system is provided having the use of distributed CPLD chips with dedicated bus for logic control of multiple MUX and data acquisition sections and having a wearable haptic user interface for an industrial sensor data collector, with vibration, heat, electrical, and/or sound outputs. In embodiments, a data collection and processing system is provided having the use of distributed CPLD chips with dedicated bus for logic control of multiple MUX and data acquisition sections and having heat maps displaying collected data for AR/VR. In embodiments, a data collection and processing system is provided having the use of distributed CPLD chips with dedicated bus for logic

control of multiple MUX and data acquisition sections and having automatically tuned AR/VR visualization of data collected by a data collector.

**[0382]** In embodiments, a data collection and processing system is provided having one or more of high-amperage input capability using solid state relays and design topology, power-down capability of at least one of an analog sensor channel and of a component board, unique electrostatic protection for trigger and vibration inputs, precise voltage reference for A/D zero reference, a phase-lock loop band-pass tracking filter for obtaining slow-speed RPMs and phase information, digital derivation of phase relative to input and trigger channels using on-board timers, a peak-detector for auto-scaling that is routed into a separate analog-to-digital converter for peak detection, routing of a trigger channel that is either raw or buffered into other analog channels, the use of higher input oversampling for delta-sigma A/D for lower sampling rate outputs to minimize anti-aliasing (AA) filter requirements, the use of a CPLD as a clock-divider for a delta-sigma analog-to-digital converter to achieve lower sampling rates without the need for digital resampling, long blocks of data at a high-sampling rate as opposed to multiple sets of data taken at different sampling rates, storage of calibration data with a maintenance history on-board card set, a rapid route creation capability using hierarchical templates, intelligent management of data collection bands, a neural net expert system using intelligent management of data collection bands, use of a database hierarchy in sensor data analysis, an expert system GUI graphical approach to defining intelligent data collection bands and diagnoses for the expert system, a graphical approach for back-calculation definition, proposed bearing analysis methods, torsional vibration detection/analysis utilizing transitory signal analysis, improved integration using both analog and digital methods, adaptive scheduling techniques for continuous monitoring of analog data in a local environment, data acquisition parking features, a self-sufficient data acquisition box, SD card storage, extended onboard statistical capabilities for continuous monitoring, the use of ambient, local, and vibration noise for prediction, smart route changes based on incoming data or alarms to enable simultaneous dynamic data for analysis or correlation, smart ODS and transfer functions, a hierarchical multiplexer, identification of sensor overload, RF identification and an inclinometer, continuous ultrasonic monitoring, cloud-based, machine pattern recognition based on fusion of remote, analog industrial sensors, cloud-based, machine pattern analysis of state information from multiple analog industrial sensors to provide anticipated state information for an industrial system, cloud-based policy automation engine for IoT, with creation, deployment, and management of IoT devices, on-device sensor fusion and data storage for industrial IoT devices, a self-organizing data marketplace for industrial IoT data, self-organization of data pools based on utilization and/or yield metrics, training AI models based on industry-specific feedback, a self-organized swarm of industrial data collectors, an IoT distributed ledger, a self-organizing collector, a network-sensitive collector, a remotely organized collector, a self-organizing storage for a multi-sensor data collector, a self-organizing network coding for multi-sensor data network, a wearable haptic user interface for an industrial sensor data collector, with vibration, heat, electrical, and/or sound outputs, heat maps displaying collected data for AR/VR, or automatically tuned AR/VR visualization of data collected by a data collector.

**[0383]** In embodiments, a platform is provided having one or more of cloud-based, machine pattern recognition based on fusion of remote, analog industrial sensors, cloud-based, machine pattern analysis of state information from multiple analog industrial sensors to provide anticipated state information for an industrial system, a cloud-based policy automation engine for IoT, with creation, deployment, and management of IoT devices, on-device sensor fusion and data storage for industrial IoT devices, a self-organizing data marketplace for industrial IoT data, self-organization of data pools based on utilization and/or yield metrics, training AI models based on industry-specific feedback, a self-organized swarm of industrial data collectors, an IoT distributed ledger, a self-organizing collector, a network-sensitive collector, a remotely organized collector, a self-organizing storage for a multi-sensor data collector, a self-organizing network coding for multi-sensor data network, a wearable haptic user interface for an industrial sensor data collector, with vibration, heat, electrical, and/or sound outputs, heat maps displaying collected data for AR/VR, or automatically tuned AR/VR visualization of data collected by a data collector.

**[0384]** With regard to FIG. **18**, a range of existing data sensing and processing systems with industrial sensing, processing, and storage systems **4500** include a streaming data collector **4510** that may be configured to accept data in a range of formats as described herein. In embodiments, the range of formats can include a data format A **4520**, a data format B **4522**, a data format C **4524**, and a data format D **4528** that may be sourced from a range of sensors. Moreover, the range of sensors can include an instrument A **4540**, an instrument B **4542**, an instrument C **4544**, and an instrument D **4548**. The streaming data collector **4510** may be configured with processing capabilities that enable access to the individual formats while leveraging the streaming, routing, self-organizing storage, and other capabilities described herein.

**[0385]** FIG. **19** depicts methods and systems **4600** for industrial machine sensor data streaming collection, processing, and storage that facilitate use of a streaming data collector **4610** to collect and obtain data from legacy instruments **4620** and streaming instruments **4622**. Legacy instruments **4620** and their data methodologies may capture and provide data that is limited in scope, due to the legacy systems and acquisition procedures, such as existing data methodologies described above herein, to a particular range of frequencies and the like. The streaming data collector **4610** may be configured to capture streaming instrument data **4632** as well as legacy instrument data **4630**. The streaming data collector **4610** may also be configured to capture current streaming instruments **4620** and legacy instruments **4622** and sensors using current and legacy data methodologies. These embodiments may be useful in transition applications from the legacy instruments and processing to the streaming instruments and processing that may be current or desired instruments or methodologies. In embodiments, the streaming data collector **4610** may be configured to process the legacy instrument data **4630** so that it can be stored compatibly with the streamed instrument data **4632**. The streaming data collector **4610** may process or parse the streamed instrument data **4632** based on the legacy instru-

ment data **4630** to produce at least one extraction of the streamed data **4642** that is compatible with the legacy instrument data **4630** that can be processed into translated legacy data **4640**. In embodiments, extracted data **4650** that can include extracted portions of translated legacy data **4652** and streamed data **4654** may be stored in a format that facilitates access and processing by legacy instrument data processing and further processing that can emulate legacy instrument data processing methods, and the like. In embodiments, the portions of the translated legacy data **4652** may also be stored in a format that facilitates processing with different methods that can take advantage of the greater frequencies, resolution, and volume of data possible with a streaming instrument.

**[0386]** FIG. **20** depicts alternate embodiments descriptive of methods and systems **4700** for industrial machine sensor data streaming, collection, processing, and storage that facilitate integration of legacy instruments and processing. In embodiments, a streaming data collector **4710** may be connected with an industrial machine **4712** and may include a plurality of sensors, such as streaming sensors **4720** and **4722** that may be configured to sense aspects of the industrial machine **4712** associated with at least one moving part of the machine **4712**. The sensors **4720** and **4722** (or more) may communicate with one or more streaming devices **4740** that may facilitate streaming data from one or more of the sensors to the streaming data collector **4710**. In embodiments, the industrial machine **4712** may also interface with or include one or more legacy instruments **4730** that may capture data associated with one or more moving parts of the industrial machine **4712** and store that data into a legacy data storage facility **4732**.

**[0387]** In embodiments, a frequency and/or resolution detection facility **4742** may be configured to facilitate detecting information about legacy instrument sourced data, such as a frequency range of the data or a resolution of the data, and the like. The detection facility **4742** may operate on data directly from the legacy instruments **4730** or from data stored in a legacy storage facility **4732**. The detection facility **4742** may communicate information detected about the legacy instruments **4730**, its sourced data, and its stored data **4732**, or the like to the streaming data collector **4710**. Alternatively, the detection facility **4742** may access information, such as information about frequency ranges, resolution, and the like that characterizes the sourced data from the legacy instrument **4730** and/or may be accessed from a portion of the legacy storage facility **4732**.

**[0388]** In embodiments, the streaming data collector **4710** may be configured with one or more automatic processors, algorithms, and/or other data methodologies to match up information captured by the one or more legacy instruments **4730** with a portion of data being provided by the one or more streaming devices **4740** from the one or more industrial machines **4712**. Data from streaming devices **4740** may include a wider range of frequencies and resolutions than the sourced data of legacy instruments **4730** and, therefore, filtering and other such functions can be implemented to extract data from the streaming devices **4740** that corresponds to the sourced data of the legacy instruments **4730** in aspects such as frequency range, resolution, and the like. In embodiments, the configured streaming data collector **4710** may produce a plurality of streams of data, including a stream of data that may correspond to the stream of data from the streaming device **4740** and a separate stream of data that is compatible, in some aspects, with the legacy instrument sourced data and the infrastructure to ingest and automatically process it. Alternatively, the streaming data collector **4710** may output data in modes other than as a stream, such as batches, aggregations, summaries, and the like.

**[0389]** Configured streaming data collector **4710** may communicate with a stream storage facility **4764** for storing at least one of the data outputs from the streaming device **4710** and data extracted therefrom that may be compatible, in some aspects, with the sourced data of the legacy instruments **4730**. A legacy compatible output of the configured streaming data collector **4710** may also be provided to a format adaptor facility **4748**, **4760** that may configure, adapt, reformat, and make other adjustments to the legacy compatible data so that it can be stored in a legacy compatible storage facility **4762** so that legacy processing facilities **4744** may execute data processing methods on data in the legacy compatible storage facility **4762** and the like that are configured to process the sourced data of the legacy instruments **4730**. In embodiments in which legacy compatible data is stored in the stream storage facility **4764**, legacy processing facility **4744** may also automatically process this data after optionally being processed by format adaptor **4760**. By arranging the data collection, streaming, processing, formatting, and storage elements to provide data in a format that is fully compatible with legacy instrument sourced data, transition from a legacy system can be simplified, and the sourced data from legacy instruments can be easily compared to newly acquired data (with more content) without losing the legacy value of the sourced data from the legacy instruments **4730**.

**[0390]** FIG. **21** depicts alternate embodiments of the methods and systems **4800** described herein for industrial machine sensor data streaming, collection, processing, and storage that may be compatible with legacy instrument data collection and processing. In embodiments, processing industrial machine sensed data may be accomplished in a variety of ways including aligning legacy and streaming sources of data, such as by aligning stored legacy and streaming data; aligning stored legacy data with a stream of sensed data; and aligning legacy and streamed data as it is being collected. In embodiments, an industrial machine **4810** may include, communicate with, or be integrated with one or more stream data sensors **4820** that may sense aspects of the industrial machine **4810** such as aspects of one or more moving parts of the machine. The industrial machine **4810** may also communicate with, include, or be integrated with one or more legacy data sensors **4830** that may sense similar aspects of the industrial machine **4810**. In embodiments, the one or more legacy data sensors **4830** may provide sensed data to one or more legacy data collectors **4840**. The stream data sensors **4820** may produce an output that encompasses all aspects of (i.e., a richer signal) and is compatible with sensed data from the legacy data sensors **4830**. The stream data sensors **4820** may provide compatible data to the legacy data collector **4840**. By mimicking the legacy data sensors **4830** or their data streams, the stream data sensors **4820** may replace (or serve as suitable duplicate for) one or more legacy data sensors, such as during an upgrade of the sensing and processing system of an industrial machine. Frequency range, resolution, and the like may be mimicked by the stream data so as to ensure that all forms of legacy data are captured or can be derived from the stream

data. In embodiments, format conversion, if needed, can also be performed by the stream data sensors **4820**. The stream data sensors **4820** may also produce an alternate data stream that is suitable for collection by the stream data collector **4850**. In embodiments, such an alternate data stream may be a superset of the legacy data sensor data in at least one or more of: frequency range, resolution, duration of sensing the data, and the like.

**[0391]** In embodiments, an industrial machine sensed data processing facility **4860** may execute a wide range of sensed data processing methods, some of which may be compatible with the data from legacy data sensors **4830** and may produce outputs that may meet legacy sensed data processing requirements. To facilitate use of a wide range of data processing capabilities of processing facility **4860**, legacy and stream data may need to be aligned so that a compatible portion of stream data may be extracted for processing with legacy compatible methods and the like. In embodiments, FIG. **21** depicts three different techniques for aligning stream data to legacy data. A first alignment methodology **4862** includes aligning legacy data output by the legacy data collector **4840** with stream data output by the stream data collector **4850**. As data is provided by the legacy data collector **4840**, aspects of the data may be detected, such as resolution, frequency, duration, and the like, and may be used as control for a processing method that identifies portions of a stream of data from the stream data collector **4850** that are purposely compatible with the legacy data. The processing facility **4860** may apply one or more legacy compatible methods on the identified portions of the stream data to extract data that can be easily compared to or referenced against the legacy data.

**[0392]** In embodiments, a second alignment methodology **4864** may involve aligning streaming data with data from a legacy storage facility **4882**. In embodiments, a third alignment methodology **4868** may involve aligning stored stream data from a stream storage facility **4884** with legacy data from the legacy data storage facility **4882**. In each of the methodologies **4862**, **4864**, **4868**, alignment data may be determined by processing the legacy data to detect aspects such as resolution, duration, frequency range, and the like. Alternatively, alignment may be performed by an alignment facility, such as facilities using methodologies **4862**, **4864**, **4868** that may receive or may be configured with legacy data descriptive information such as legacy frequency range, duration, resolution, and the like.

**[0393]** In embodiments, an industrial machine sensing data processing facility **4860** may have access to legacy compatible methods and algorithms that may be stored in a legacy data methodology storage facility **4880**. These methodologies, algorithms, or other data in the legacy algorithm storage facility **4880** may also be a source of alignment information that could be communicated by the industrial machine sensed data processing facility **4860** to the various alignment facilities having methodologies **4862**, **4864**, **4868**. By having access to legacy compatible algorithms and methodologies, the data processing facility **4860** may facilitate processing legacy data, streamed data that is compatible with legacy data, or portions of streamed data that represent the legacy data to produce legacy compatible analytics.

**[0394]** In embodiments, the data processing facility **4860** may execute a wide range of other sensed data processing methods, such as wavelet derivations and the like, to produce streamed data analytics **4892**. In embodiments, the streaming data collector **102**, **4510**, **4610**, **4710** (FIGS. **3**, **6**, **18**, **19**, **20**) or data processing facility **4860** may include portable algorithms, methodologies, and inputs that may be defined and extracted from data streams. In many examples, a user or enterprise may already have existing and effective methods related to analyzing specific pieces of machinery and assets. These existing methods could be imported into the configured streaming data collector **102**, **4510**, **4610**, **4710** or the data processing facility **4860** as portable algorithms or methodologies. Data processing, such as described herein for the configured streaming data collector **102**, **4510**, **4610**, **4710** may also match an algorithm or methodology to a situation, then extract data from a stream to match to the data methodology from the legacy acquisition or legacy acquisition techniques. In embodiments, the streaming data collector **102**, **4510**, **4610**, **4710** may be compatible with many types of systems and may be compatible with systems having varying degrees of criticality.

**[0395]** Exemplary industrial machine deployments of the methods and systems described herein are now described. An industrial machine may be a gas compressor. In an example, a gas compressor may operate an oil pump on a very large turbo machine, such as a very large turbo machine that includes 10,000 HP motors. The oil pump may be a highly critical system as its failure could cause an entire plant to shut down. The gas compressor in this example may run four stages at a very high frequency, such as 36,000 RPM, and may include tilt pad bearings that ride on an oil film. The oil pump in this example may have roller bearings, such that if an anticipated failure is not being picked up by a user, the oil pump may stop running, and the entire turbo machine would fail. Continuing with this example, the streaming data collector **102**, **4510**, **4610**, **4710** may collect data related to vibrations, such as casing vibration and proximity probe vibration. Other bearings industrial machine examples may include generators, power plants, boiler feed pumps, fans, forced draft fans, induced draft fans, and the like. The streaming data collector **102**, **4510**, **4610**, **4710** for a bearings system used in the industrial gas industry may support predictive analysis on the motors, such as that performed by model-based expert systems—for example, using voltage, current, and vibration as analysis metrics.

**[0396]** Another exemplary industrial machine deployment may be a motor and the streaming data collector **102**, **4510**, **4610**, **4710** that may assist in the analysis of a motor by collecting voltage and current data on the motor, for example.

**[0397]** Yet another exemplary industrial machine deployment may include oil quality sensing. An industrial machine may conduct oil analysis, and the streaming data collector **102**, **4510**, **4610**, **4710** may assist in searching for fragments of metal in oil, for example.

**[0398]** The methods and systems described herein may also be used in combination with model-based systems. Model-based systems may integrate with proximity probes. Proximity probes may be used to sense problems with machinery and shut machinery down due to sensed problems. A model-based system integrated with proximity probes may measure a peak waveform and send a signal that shuts down machinery based on the peak waveform measurement.

**[0399]** Enterprises that operate industrial machines may operate in many diverse industries. These industries may

include industries that operate manufacturing lines, provide computing infrastructure, support financial services, provide HVAC equipment, and the like. These industries may be highly sensitive to lost operating time and the cost incurred due to lost operating time. HVAC equipment enterprises in particular may be concerned with data related to ultrasound, vibration, IR, and the like, and may get much more information about machine performance related to these metrics using the methods and systems of industrial machine sensed data streaming collection than from legacy systems.

**[0400]** Methods and systems described herein for industrial machine sensor data streaming, collection, processing, and storage may be configured to operate and integrate with existing data collection, processing and storage systems and may include a method for capturing a plurality of streams of sensed data from sensors deployed to monitor aspects of an industrial machine associated with at least one moving part of the machine; at least one of the streams containing a plurality of frequencies of data. The method may include identifying a subset of data in at least one of the multiple streams that corresponds to data representing at least one predefined frequency. The at least one predefined frequency is represented by a set of data collected from alternate sensors deployed to monitor aspects of the industrial machine associated with the at least one moving part of the machine. The method may further include processing the identified data with a data processing facility that processes the identified data with data methodologies configured to be applied to the set of data collected from alternate sensors. Lastly, the method may include storing the at least one of the streams of data, the identified subset of data, and a result of processing the identified data in an electronic data set.

**[0401]** The methods and systems may include a method for applying data captured from sensors deployed to monitor aspects of an industrial machine associated with at least one moving part of the machine, the data captured with predefined lines of resolution covering a predefined frequency range, to a frequency matching facility that identifies a subset of data streamed from other sensors deployed to monitor aspects of the industrial machine associated with at least one moving part of the machine, the streamed data comprising a plurality of lines of resolution and frequency ranges, the subset of data identified corresponding to the lines of resolution and predefined frequency range. This method may include storing the subset of data in an electronic data record in a format that corresponds to a format of the data captured with predefined lines of resolution, and signaling to a data processing facility the presence of the stored subset of data. This method may optionally include processing the subset of data with at least one of algorithms, methodologies, models, and pattern recognizers that corresponds to algorithms, methodologies, models, and pattern recognizers associated with processing the data captured with predefined lines of resolution covering a predefined frequency range.

**[0402]** The methods and systems may include a method for identifying a subset of streamed sensor data. The sensor data is captured from sensors deployed to monitor aspects of an industrial machine associated with at least one moving part of the machine. The subset of streamed sensor data is at predefined lines of resolution for a predefined frequency range. The method includes establishing a first logical route for communicating electronically between a first computing facility performing the identifying and a second computing facility. The identified subset of the streamed sensor data is communicated exclusively over the established first logical route when communicating the subset of streamed sensor data from the first facility to the second facility. This method may further include establishing a second logical route for communicating electronically between the first computing facility and the second computing facility for at least one portion of the streamed sensor data that is not the identified subset. This method may further include establishing a third logical route for communicating electronically between the first computing facility and the second computing facility for at least one portion of the streamed sensor data that includes the identified subset and at least one other portion of the data not represented by the identified subset.

**[0403]** The methods and systems may include a first data sensing and processing system that captures first data from a first set of sensors deployed to monitor aspects of an industrial machine associated with at least one moving part of the machine, the first data covering a set of lines of resolution and a frequency range. This system may include a second data sensing and processing system that captures and streams a second set of data from a second set of sensors deployed to monitor aspects of the industrial machine associated with at least one moving part of the machine, the second data covering a plurality of lines of resolution that includes the set of lines of resolution and a plurality of frequencies that includes the frequency range. The system may enable: (1) selecting a portion of the second data that corresponds to the set of lines of resolution and the frequency range of the first data; and (2) processing the selected portion of the second data with the first data sensing and processing system.

**[0404]** The methods and systems may include a method for automatically processing a portion of a stream of sensed data. The sensed data received from a first set of sensors deployed to monitor aspects of an industrial machine associated with at least one moving part of the machine in response to an electronic data structure that facilitates extracting a subset of the stream of sensed data that corresponds to a set of sensed data received from a second set of sensors deployed to monitor the aspects of the industrial machine associated with the at least one moving part of the machine. The set of sensed data is constrained to a frequency range. The stream of sensed data includes a range of frequencies that exceeds the frequency range of the set of sensed data. The processing comprises executing data methodologies on a portion of the stream of sensed data that is constrained to the frequency range of the set of sensed data. The data methodologies are configured to process the set of sensed data.

**[0405]** The methods and systems may include a method for receiving first data from sensors deployed to monitor aspects of an industrial machine associated with at least one moving part of the machine. This method may further include: (1) detecting at least one of a frequency range and lines of resolution represented by the first data, and (2) receiving a stream of data from sensors deployed to monitor the aspects of the industrial machine associated with the at least one moving part of the machine. The stream of data includes: a plurality of frequency ranges and a plurality of lines of resolution that exceeds the frequency range and the lines of resolution represented by the first data; extracting a set of data from the stream of data that corresponds to at least one of the frequency range and the lines of resolution

represented by the first data; and processing the extracted set of data with a data processing method that is configured to process data within the frequency range and within the lines of resolution of the first data.

**[0406]** The methods and systems disclosed herein may include, connect to, or be integrated with a data acquisition instrument and in the many embodiments, FIG. **22** shows methods and systems **5000** that includes a data acquisition (DAQ) streaming instrument **5002** also known as an SDAQ. In embodiments, output from sensors **5010**, **5012**, **5014** may be of various types including vibration, temperature, pressure, ultrasound and so on. In my many examples, one of the sensors may be used. In further examples, many of the sensors may be used and their signals may be used individually or in predetermined combinations and/or at predetermined intervals, circumstances, setups, and the like.

**[0407]** In embodiments, the output signals from the sensors **5010**, **5012**, **5014** may be fed into instrument inputs **5020**, **5022**, **5024** of the DAQ instrument **5002** and may be configured with additional streaming capabilities **5028**. By way of these many examples, the output signals from the sensors **5010**, **5012**, **5014**, or more as applicable, may be conditioned as an analog signal before digitization with respect to at least scaling and filtering. The signals may then be digitized by an analog-to-digital converter **5030**. The signals received from all relevant channels (i.e., one or more channels are switched on manually, by alarm, by route, and the like) may be simultaneously sampled at a predetermined rate sufficient to perform the maximum desired frequency analysis that may be adjusted and readjusted as needed or otherwise held constant to ensure compatibility or conformance with other relevant datasets. In embodiments, the signals are sampled for a relatively long time and gap-free as one continuous stream so as to enable further post-processing at lower sampling rates with sufficient individual sampling.

**[0408]** In embodiments, data may be streamed from a collection of points and then the next set of data may be collected from additional points according to a prescribed sequence, route, path, or the like. In many examples, the sensors **5010**, **5012**, **5014** or more may be moved to the next location according to the prescribed sequence, route, pre-arranged configurations, or the like. In certain examples, not all of the sensor **5010**, **5012**, **5014** may move and therefore some may remain fixed in place and used for detection of reference phase or the like.

**[0409]** In embodiments, a multiplex (mux) **5032** may be used to switch to the next collection of points, to a mixture of the two methods or collection patterns that may be combined, other predetermined routes, and the like. The multiplexer **5032** may be stackable so as to be laddered and effectively accept more channels than the DAQ instrument **5002** provides. In examples, the DAQ instrument **5002** may provide eight channels while the multiplexer **5032** may be stacked to supply **32** channels. Further variations are possible with one more multiplexers. In embodiments, the multiplexer **5032** may be fed into the DAQ instrument **5002** through an instrument input **5034**. In embodiments, the DAQ instrument **5002** may include a controller **5038** that may take the form of an onboard controller, a PC, other connected devices, network based services, and combinations thereof.

**[0410]** In embodiments, the sequence and panel conditions used to govern the data collection process may be obtained from the multimedia probe (MMP) and probe control, sequence and analytical (PCSA) information store **5040**. In embodiments, the information store **5040** may be onboard the DAQ instrument **5002**. In embodiments, contents of the information store **5040** may be obtained through a cloud network facility, from other DAQ instruments, from other connected devices, from the machine being sensed, other relevant sources, and combinations thereof. In embodiments, the information store **5040** may include such items as the hierarchical structural relationships of the machine, e.g., a machine contains predetermined pieces of equipment, each of which may contain one or more shafts and each of those shafts may have multiple associated bearings. Each of those types of bearings may be monitored by specific types of transducers or probes, according to one or more specific prescribed sequences (paths, routes, and the like) and with one or more specific panel conditions that may be set on the one or more DAQ instruments **5002**. By way of this example, the panel conditions may include hardware specific switch settings or other collection parameters. In many examples, collection parameters include but are not limited to a sampling rate, AC/DC coupling, voltage range and gain, integration, high and low pass filtering, anti-aliasing filtering, ICP™ transducers and other integrated-circuit piezoelectric transducers, 4-20 mA loop sensors, and the like. In embodiments, the information store **5040** may also include machinery specific features that may be important for proper analysis such as gear teeth for a gear, number blades in a pump impeller, number of motor rotor bars, bearing specific parameters necessary for calculating bearing frequencies, revolution per minutes information of all rotating elements and multiples of those RPM ranges, and the like. Information in the information store may also be used to extract stream data **5050** for permanent storage.

**[0411]** Based on directions from the DAQ API software **5052**, digitized waveforms may be uploaded using DAQ driver services **5054** of a driver onboard the DAQ instrument **5002**. In embodiments, data may then be fed into a raw data server **5058** which may store the stream data **5050** in a stream data repository **5060**. In embodiments, this data storage area is typically meant for storage until the data is copied off of the DAQ instrument **5002** and verified. The DAQ API **5052** may also direct the local data control application **5062** to extract and process the recently obtained stream data **5050** and convert it to the same or lower sampling rates of sufficient length to effect one or more desired resolutions. By way of these examples, this data may be converted to spectra, averaged, and processed in a variety of ways and stored, at least temporarily, as extracted/processed (EP) data **5064**. It will be appreciated in light of the disclosure that legacy data may require its own sampling rates and resolution to ensure compatibility and often this sampling rate may not be integer proportional to the acquired sampling rate. It will also be appreciated in light of the disclosure that this may be especially relevant for order-sampled data whose sampling frequency is related directly to an external frequency (typically the running speed of the machine or its local componentry) rather than the more-standard sampling rates employed by the internal crystals, clock functions, or the like of the DAQ instrument (e.g., values of Fmax of 100, 200, 500, 1K, 2K, 5K, 10K, 20K, and so on).

**[0412]** In embodiments, the extract/process (EP) align module **5068** of the local data control application **5062** may

be able to fractionally adjust the sampling rates to these non-integer ratio rates satisfying an important requirement for making data compatible with legacy systems. In embodiments, fractional rates may also be converted to integer ratio rates more readily because the length of the data to be processed may be adjustable. It will be appreciated in light of the disclosure that if the data was not streamed and just stored as spectra with the standard or predetermined Fmax, it may be impossible in certain situations to convert it retroactively and accurately to the order-sampled data. It will also be appreciated in light of the disclosure that internal identification issues may also need to be reconciled. In many examples, stream data may be converted to the proper sampling rate and resolution as described and stored (albeit temporarily) in an EP legacy data repository **5070** to ensure compatibility with legacy data.

**[0413]** To support legacy data identification issues, a user input module **5072** is shown in many embodiments should there be no automated process (whether partially or wholly) for identification translation. In such examples, one or more legacy systems (i.e., pre-existing data acquisition) may be characterized in that the data to be imported is in a fully standardized format such as a Mimosa™ format, and other similar formats. Moreover, sufficient indentation of the legacy data and/or the one or more machines from which the legacy data was produced may be required in the completion of an identification mapping table **5074** to associate and link a portion of the legacy data to a portion of the newly acquired streamed data **5050**. In many examples, the end user and/or legacy vendor may be able to supply sufficient information to complete at least a portion of a functioning identification (ID) mapping table **5074** and therefore may provide the necessary database schema for the raw data of the legacy system to be used for comparison, analysis, and manipulation of newly streamed data **5050**.

**[0414]** In embodiments, the local data control application **5062** may also direct streaming data as well as extracted/processed (EP) data to a cloud network facility **5080** via wired or wireless transmission. From the cloud network facility **5080** other devices may access, receive, and maintain data including the data from a master raw data server (MRDS) **5082**. The movement, distribution, storage, and retrieval of data remote to the DAQ instrument **5002** may be coordinated by the cloud data management services ("CDMS") **5084**.

**[0415]** FIG. **23** shows additional methods and systems that include the DAQ instrument **5002** accessing related cloud based services. In embodiments, the DAQ API **5052** may control the data collection process as well as its sequence. By way of these examples, the DAQ API **5052** may provide the capability for editing processes, viewing plots of the data, controlling the processing of that data, viewing the output data in all its myriad forms, analyzing this data including expert analysis, and communicating with external devices via the local data control application **5062** and with the CDMS **5084** via the cloud network facility **5080**. In embodiments, the DAQ API **5052** may also govern the movement of data, its filtering, as well as many other housekeeping functions.

**[0416]** In embodiments, an expert analysis module **5100** may generate reports **5102** that may use machine or measurement point specific information from the information store **5040** to analyze the stream data **5050** using a stream data analyzer module **5104** and the local data control application **5062** with the extract/process ("EP") align module **5068**. In embodiments, the expert analysis module **5100** may generate new alarms or ingest alarm settings into an alarms module **5108** that is relevant to the stream data **5050**. In embodiments, the stream data analyzer module **5104** may provide a manual or automated mechanism for extracting meaningful information from the stream data **5050** in a variety of plotting and report formats. In embodiments, a supervisory control of the expert analysis module **5100** is provided by the DAQ API **5052**. In further examples, the expert analysis module **5100** may be supplied (wholly or partially) via the cloud network facility **5080**. In many examples, the expert analysis module **5100** via the cloud may be used rather than a locally-deployed expert analysis module **5100** for various reasons such as using the most up-to-date software version, more processing capability, a bigger volume of historical data to reference, and so on. In many examples, it may be important that the expert analysis module **5100** be available when an internet connection cannot be established so having this redundancy may be crucial for seamless and time efficient operation. Toward that end, many of the modular software applications and databases available to the DAQ instrument **5002** where applicable may be implemented with system component redundancy to provide operational robustness to provide connectivity to cloud services when needed but also operate successfully in isolated scenarios where connectivity is not available and sometime not available purposefully to increase security and the like.

**[0417]** In embodiments, the DAQ instrument acquisition may require a real time operating system ("RTOS") for the hardware especially for streamed gap-free data that is acquired by a PC. In some instances, the requirement for a RTOS may result in (or may require) expensive custom hardware and software capable of running such a system. In many embodiments, such expensive custom hardware and software may be avoided and an RTOS may be effectively and sufficiently implemented using a standard Windows™ operating systems or similar environments including the system interrupts in the procedural flow of a dedicated application included in such operating systems.

**[0418]** The methods and systems disclosed herein may include, connect to, or be integrated with one or more DAQ instruments and in the many embodiments, FIG. **24** shows methods and systems **5150** that include the DAQ instrument **5002** (also known as a streaming DAQ or an SDAQ). In embodiments, the DAQ instrument **5002** may effectively and sufficiently implement an RTOS using standard windows operating system (or other similar personal computing systems) that may include a software driver configured with a First In, First Out (FIFO) memory area **5152**. The FIFO memory area **5152** may be maintained and hold information for a sufficient amount of time to handle a worst-case interrupt that it may face from the local operating system to effectively provide the RTOS. In many examples, configurations on a local personal computer or connected device may be maintained to minimize operating system interrupts. To support this, the configurations may be maintained, controlled, or adjusted to eliminate (or be isolated from) any exposure to extreme environments where operating system interrupts may become an issue. In embodiments, the DAQ instrument **5002** may produce a notification, alarm, message, or the like to notify a user when any gap errors are detected. In these many examples, such errors may be shown

to be rare and even if they occur, the data may be adjusted knowing when they occurred should such a situation arise.

**[0419]** In embodiments, the DAQ instrument **5002** may maintain a sufficiently large FIFO memory area **5152** that may buffer the incoming data so as to be not affected by operating system interrupts when acquiring data. It will be appreciated in light of the disclosure that the predetermined size of the FIFO memory area **5152** may be based on operating system interrupts that may include Windows system and application functions such as the writing of data to Disk or SSD, plotting, GUI interactions and standard Windows tasks, low-level driver tasks such as servicing the DAQ hardware and retrieving the data in bursts, and the like.

**[0420]** In embodiments, the computer, controller, connected device or the like that may be included in the DAQ instrument **5002** may be configured to acquire data from the one or more hardware devices over a USB port, firewire, ethernet, or the like. In embodiments, the DAQ driver services **5054** may be configured to have data delivered to it periodically so as to facilitate providing a channel specific FIFO memory buffer that may be configured to not miss data, i.e., it is gap-free. In embodiments, the DAQ driver services **5054** may be configured so as to maintain an even larger (than the device) channel specific FIFO area **5152** that it fills with new data obtained from the device. In embodiments, the DAQ driver services **5054** may be configured to employ a further process in that the raw data server **5058** may take data from the FIFO **5110** and may write it as a contiguous stream to non-volatile storage areas such as the stream data repository **5060** that may be configured as one or more disk drives, SSDs, or the like. In embodiments, the FIFO **5110** may be configured to include a starting and stopping marker or pointer to mark where the latest most current stream was written. By way of these examples, a FIFO end marker **5114** may be configured to mark the end of the most current data until it reaches the end of the spooler and then wraps around constantly cycling around. In these examples, there is always one megabyte (or other configured capacities) of the most current data available in the FIFO **5110** once the spooler fills up. It will be appreciated in light of the disclosure that further configurations of the FIFO memory area may be employed. In embodiments, the DAQ driver services **5054** may be configured to use the DAQ API **5052** to pipe the most recent data to a high-level application for processing, graphing and analysis purposes. In some examples, it is not required that this data be gap-free but even in these instances, it is helpful to identify and mark the gaps in the data. Moreover, these data updates may be configured to be frequent enough so that the user would perceive the data as live. In the many embodiments, the raw data is flushed to non-volatile storage without a gap at least for the prescribed amount of time and examples of the prescribed amount of time may be about thirty seconds to over four hours. It will be appreciated in light of the disclosure that many pieces of equipment and their components may contribute to the relative needed duration of the stream of gap-free data and those durations may be over four hours when relatively low speeds are present in large numbers, when non-periodic transient activity is occurring on a relatively long time frame, when duty cycle only permits operation in relevant ranges for restricted durations and the like.

**[0421]** With reference to FIG. **23**, the stream data analyzer module **5104** may provide for the manual or extraction of information from the data stream in a variety of plotting and report formats. In embodiments, resampling, filtering (including anti-aliasing), transfer functions, spectrum analysis, enveloping, averaging, peak detection functionality, as well as a host of other signal processing tools, may be available for the analyst to analyze the stream data and to generate a very large array of snapshots. It will be appreciated in light of the disclosure that much larger arrays of snapshots are created than ever would have been possible by scheduling the collection of snapshots beforehand, i.e., during the initial data acquisition for the measurement point in question.

**[0422]** FIG. **25** depicts a display **5200** whose viewable content **5202** may be accessed locally or remotely, wholly or partially. In many embodiments, the display **5200** may be part of the DAQ instrument **5002**, may be part of the PC or connected device **5038** that may be part of the DAQ instrument **5002**, or its viewable content **5202** may be viewable from associated network connected displays. In further examples, the viewable content **5202** of the display **5200** or portions thereof may be ported to one or more relevant network addresses. In the many embodiments, the viewable content **5202** may include a screen **5204** that shows, for example, an approximately two-minute data stream **5208** may be collected at a sampling rate of 25.6 kHz for four channels **5220**, **5222**, **5224**, **5228**, simultaneously. By way of these examples and in these configurations, the length of the data may be approximately 3.1 megabytes. It will be appreciated in light of the disclosure that the data stream (including each of its four channels or as many as applicable) may be replayed in some aspects like a magnetic tape recording (e.g. a reel-to-reel or a cassette) with all of the controls normally associated with playback such as forward **5230**, fast forward, backward **5232**, fast rewind, step back, step forward, advance to time point, retreat to time point, beginning **5234**, end, **5238**, play **5240**, stop **5242**, and the like. Additionally, the playback of the data stream may further be configured to set a width of the data stream to be shown as a contiguous subset of the entire stream. In the example with a two-minute data stream, the entire two minutes may be selected by the "select all" button **5244**, or some subset thereof may be selected with the controls on the screen **5204** or that may be placed on the screen **5204** by configuring the display **5200** and the DAQ instrument **5002**. In this example, the "process selected data" button **5250** on the screen **5204** may be selected to commit to a selection of the data stream.

**[0423]** FIG. **26** depicts the many embodiments that include a screen **5250** on the display **5200** that shows results of selecting all of the data for this example. In embodiments, the screen **5250** in FIG. **26** may provide the same or similar playback capabilities as what is depicted on the screen **5204** shown in FIG. **25** but also includes resampling capabilities, waveform displays, and spectrum displays. In light of the disclosure, it will be appreciated that this functionality may permit the user to choose in many situations any Fmax less than that supported by the original streaming sampling rate. In embodiments, any section of any size may be selected and further processing, analytics, and tools for viewing and dissecting the data may be provided. In embodiments, the screen **5250** may include four windows **5252**, **5254**, **5258**, **5260** that show the stream data from the four channels **5220**, **5222**, **5224**, **5228** of FIG. **25**. In embodiments, the screen **5250** may also include offset and overlap controls **5262**, resampling controls **5264**, and other similar controls.

**[0424]** In many examples, any one of many transfer functions may be established between any two channels, such as the two channels **5280**, **5282** that may be shown on a screen **5284**, shown on the display **5200**, as depicted in FIG. **27**. The selection of the two channels **5280**, **5282** on the screen **5284** may permit the user to depict the output of the transfer function on any of the screens including screen **5284** and screen **5204**.

**[0425]** In embodiments, FIG. **28** shows a high-resolution spectrum screen **5300** on the display **5200** with a waveform view **5302**, full cursor control **5304** and a peak extraction view **5308**. In these examples, the peak extraction view **5308** may be configured with a resolved configuration **5310** that may be configured to provide enhanced amplitude and frequency accuracy and may use spectral sideband energy distribution. The peak extraction view **5308** may also be configured with averaging **5312**, phase and cursor vector information **5314**, and the like.

**[0426]** In embodiments, FIG. **29** shows an enveloping screen **5350** on the display **5200** with a waveform view **5352**, and a spectral format view **5354**. The views **5352**, **5354** on the enveloping screen **5350** may display modulation from the signal in both waveform and spectral formats. In embodiments, FIG. **30** shows a relative phase screen **5380** on the display **5200** with four phase views **5382**, **5384**, **5388**, **5390**. The four phase views **5382**, **5384**, **5388**, **5390** relate to the on spectrum the enveloping screen **5350** that may display modulation from the signal in waveform format in view **5352** and spectral format in view **5354**. In embodiments, the reference channel control **5392** may be selected to use channel four as a reference channel to determine relative phase between each of the channels.

**[0427]** It will be appreciated in light of the disclosure that the sampling rates of vibration data of up to 100 kHz (or higher in some scenarios) may be utilized for non-vibration sensors as well. In doing so, it will further be appreciated in light of the disclosure that stream data in such durations at these sampling rates may uncover new patterns to be analyzed due in no small part that many of these types of sensors have not been utilized in this manner. It will also be appreciated in light of the disclosure that different sensors used in machinery condition monitoring may provide measurements more akin to static levels rather than fast-acting dynamic signals. In some cases, faster response time transducers may have to be used prior to achieving the faster sampling rates.

**[0428]** In many embodiments, sensors may have a relatively static output such as temperature, pressure, or flow but may still be analyzed with the dynamic signal processing system and methodologies as disclosed herein. It will be appreciated in light of the disclosure that the time scale, in many examples, may be slowed down. In many examples, a collection of temperature readings collected approximately every minute for over two weeks may be analyzed for their variation solely or in collaboration or in fusion with other relevant sensors. By way of these examples, the direct current level or average level may be omitted from all the readings (e.g., by subtraction) and the resulting delta measurements may be processed (e.g., through a Fourier transform). From these examples, resulting spectral lines may correlate to specific machinery behavior or other symptoms present in industrial system processes. In further examples, other techniques include enveloping that may look for modulation, wavelets that may look for spectral patterns that last only for a short time (e.g., bursts), cross-channel analysis to look for correlations with other sensors including vibration, and the like.

**[0429]** FIG. **31** shows a DAQ instrument **5400** that may be integrated with one or more analog sensors **5402** and endpoint nodes **5404** to provide a streaming sensor **5410** or smart sensors that may take in analog signals and then process and digitize them, and then transmit them to one or more external monitoring systems **5412** in the many embodiments that may be connected to, interfacing with, or integrated with the methods and systems disclosed herein. The monitoring system **5412** may include a streaming hub server **5420** that may communicate with the CDMS **5084**. In embodiments, the CDMS **5084** may contact, use, and integrate with cloud data **5430** and cloud services **5432** that may be accessible through one or more cloud network facilities **5080**. In embodiments, the streaming hub server **5420** may connect with another streaming sensor **5440** that may include a DAQ instrument **5442**, an endpoint node **5444**, and the one or more analog sensors such as analog sensor **5448**. The steaming hub server **5420** may connect with other streaming sensors such as the streaming sensor **5460** that may include a DAQ instrument **5462**, an endpoint node **5464**, and the one or more analog sensors such as analog sensor **5468**.

**[0430]** In embodiments, there may be additional streaming hub servers such as the steaming hub server **5480** that may connect with other streaming sensors such as the streaming sensor **5490** that may include a DAQ instrument **5492**, an endpoint node **5494**, and the one or more analog sensors such as analog sensor **5498**. In embodiments, the streaming hub server **5480** may also connect with other streaming sensors such as the streaming sensor **5500** that may include a DAQ instrument **5502**, an endpoint node **5504**, and the one or more analog sensors such as analog sensor **5508**. In embodiments, the transmission may include averaged overall levels and in other examples may include dynamic signal sampled at a prescribed and/or fixed rate. In embodiments, the streaming sensors **5410**, **5440**, **5460**, **5490**, and **5500** may be configured to acquire analog signals and then apply signal conditioning to those analog signals including coupling, averaging, integrating, differentiating, scaling, filtering of various kinds, and the like. The streaming sensors **5410**, **5440**, **5460**, **5490**, and **5500** may be configured to digitize the analog signals at an acceptable rate and resolution (number of bits) and to process further the digitized signal when required. The streaming sensors **5410**, **5440**, **5460**, **5490**, and **5500** may be configured to transmit the digitized signals at pre-determined, adjustable, and re-adjustable rates. In embodiments, the streaming sensors **5410**, **5440**, **5460**, **5490**, and **5500** are configured to acquire, digitize, process, and transmit data at a sufficient effective rate so that a relatively consistent stream of data may be maintained for a suitable amount of time so that a large number of effective analyses may be shown to be possible. In the many embodiments, there would be no gaps in the data stream and the length of data should be relatively long, ideally for an unlimited amount of time, although practical considerations typically require ending the stream. It will be appreciated in light of the disclosure that this long duration data stream with effectively no gap in the stream is in contrast to the more commonly used burst collection where data is collected for a relatively short period of time (i.e., a short burst of collection), followed by a pause, and then

perhaps another burst collection and so on. In the commonly used collections of data collected over noncontiguous bursts, data would be collected at a slow rate for low frequency analysis and high frequency for high frequency analysis. In many embodiments of the present disclosure, in contrast, the streaming data is being collected (i) once, (ii) at the highest useful and possible sampling rate, and (iii) for a long enough time that low frequency analysis may be performed as well as high frequency. To facilitate the collection of the streaming data, enough storage memory must be available on the one or more streaming sensors such as the streaming sensors **5410**, **5440**, **5460**, **5490**, **5500** so that new data may be off-loaded externally to another system before the memory overflows. In embodiments, data in this memory would be stored into and accessed from "First-In, First-Out" ("FIFO") mode. In these examples, the memory with a FIFO area may be a dual port so that the sensor controller may write to one part of it while the external system reads from a different part. In embodiments, data flow traffic may be managed by semaphore logic.

**[0431]** It will be appreciated in light of the disclosure that vibration transducers that are larger in mass will have a lower linear frequency response range because the natural resonance of the probe is inversely related to the square root of the mass and will be lowered. Toward that end, a resonant response is inherently non-linear and so a transducer with a lower natural frequency will have a narrower linear pass-band frequency response. It will also be appreciated in light of the disclosure that above the natural frequency the amplitude response of the sensor will taper off to negligible levels rendering it even more unusable. With that in mind, high frequency accelerometers, for this reason, tend to be quite small in mass, to the order of half of a gram. It will also be appreciated in light of the disclosure that adding the required signal processing and digitizing electronics required for streaming may, in certain situations, render the sensors incapable in many instances of measuring high-frequency activity.

**[0432]** In embodiments, streaming hubs such as the streaming hubs **5420**, **5480** may effectively move the electronics required for streaming to an external hub via cable. It will be appreciated in light of the disclosure that the streaming hubs may be located virtually next to the streaming sensors or up to a distance supported by the electronic driving capability of the hub. In instances where an internet cache protocol ("ICP") is used, the distance supported by the electronic driving capability of the hub would be anywhere from 100 to 1000 feet (30.5 to 305 meters) based on desired frequency response, cable capacitance, and the like. In embodiments, the streaming hubs may be positioned in a location convenient for receiving power as well as connecting to a network (be it LAN or WAN). In embodiments, other power options would include solar, thermal as well as energy harvesting. Transfer between the streaming sensors and any external systems may be wireless or wired and may include such standard communication technologies as 802.11 and 900 MHz wireless systems, Ethernet, USB, firewire and so on.

**[0433]** With reference to FIG. **22**, the many examples of the DAQ instrument **5002** include embodiments where data that may be uploaded from the local data control application **5062** to the master raw data server ("MRDS") **5082**. In embodiments, information in the multimedia probe ("MMP") and probe control, sequence and analytical ("PCSA") information store **5040** may also be downloaded from the MRDS **5082** down to the DAQ instrument **5002**. Further details of the MRDS **5082** are shown in FIG. **32** including embodiments where data may be transferred to the MRDS **5082** from the DAQ instrument **5002** via a wired or wireless network, or through connection to one or more portable media, drive, other network connections, or the like. In embodiments, the DAQ instrument **5002** may be configured to be portable and may be carried on one or more predetermined routes to assess predefined points of measurement. In these many examples, the operating system that may be included in the MRDS **5082** may be Windows™, Linux™ or MacOS™ operating systems, or other similar operating systems. Further, in these arrangements, the operating system, modules for the operating system, and other needed libraries, data storage, and the like may be accessible wholly or partially through access to the cloud network facility **5080**. In embodiments, the MRDS **5082** may reside directly on the DAQ instrument **5002**, especially in on-line system examples. In embodiments, the DAQ instrument **5002** may be linked on an intra-network in a facility but may otherwise be behind a firewall. In further examples, the DAQ instrument **5002** may be linked to the cloud network facility **5080**. In the various embodiments, one of the computers or mobile computing devices may be effectively designated the MRDS **5082** to which all of the other computing devices may feed it data such as one of the MRDS **6104**, as depicted in FIGS. **41** and **42**. In the many examples where the DAQ instrument **5002** may be deployed and configured to receive stream data in a swarm environment, one or more of the DAQ instruments **5002** may be effectively designated the MRDS **5082** to which all of the other computing devices may feed it data. In the many examples where the DAQ instrument **5002** may be deployed and configured to receive stream data in an environment where the methods and systems disclosed herein are intelligently assigning, controlling, adjusting, and re-adjusting data pools, computing resources, network bandwidth for local data collection, and the like, one or more of the DAQ instruments **5002** may be effectively designated the MRDS **5082** to which all of the other computing devices may feed it data.

**[0434]** With further reference to FIG. **32**, new raw streaming data, data that have been through extract, process, and align processes (EP data), and the like may be uploaded to one or more master raw data servers as needed or as scaled in various environments. In embodiments, a master raw data server ("MRDS") **5700** may connect to and receive data from other master raw data servers such as the MRDS **5082**. The MRDS **5700** may include a data distribution manager module **5702**. In embodiments, the new raw streaming data may be stored in the new stream data repository **5704**. In many instances, like raw data streams stored on the DAQ instrument **5002**, the new stream data repository **5704** and new extract and process data repository **5708** may be similarly configured as a temporary storage area.

**[0435]** In embodiments, the MRDS **5700** may include a stream data analyzer module with an extract and process alignment module **5710**. The analyzer module **5710** may be shown to be a more robust data analyzer and extractor than may be typically found on portable streaming DAQ instruments although it may be deployed on the DAQ instrument **5002** as well. In embodiments, the analyzer module **5710** takes streaming data and instantiates it at a specific sampling

rate and resolution similar to the local data control module **5062** on the DAQ instrument **5002**. The specific sampling rate and resolution of the analyzer module **5710** may be based on either user input **5712** or automated extractions from a multimedia probe ("MMP") and the probe control, sequence and analytical ("PCSA") information store **5714** and/or an identification mapping table **5718**, which may require the user input **5712** if there is incomplete information regarding various forms of legacy data similar to as was detailed with the DAQ instrument **5002**. In embodiments, legacy data may be processed with the analyzer module **5710** and may be stored in one or more temporary holding areas such as a new legacy data repository **5720**. One or more temporary areas may be configured to hold data until it is copied to an archive and verified. The analyzer **5710** module may also facilitate in-depth analysis by providing many varying types of signal processing tools including but not limited to filtering, Fourier transforms, weighting, resampling, envelope demodulation, wavelets, two-channel analysis, and the like. From this analysis, many different types of plots and mini-reports may be generated from a reports and plots module **5724**. In embodiments, data is sent to the processing, analysis, reports, and archiving ("PARA") server **5730** upon user initiation or in an automated fashion especially for on-line systems.

**[0436]** In embodiments, a PARA server **5750** may connect to and receive data from other PARA servers such as the PARA server **5730**. With reference to FIG. **34**, the PARA server **5730** may provide data to a supervisory module **5752** on the PARA server **5750** that may be configured to provide at least one of processing, analysis, reporting, archiving, supervisory, and similar functionalities. The supervisory module **5752** may also contain extract, process align functionality and the like. In embodiments, incoming streaming data may first be stored in a raw data stream archive **5760** after being properly validated. Based on the analytical requirements derived from a multimedia probe ("MMP") and probe control, sequence and analytical ("PCSA") information store **5762** as well as user settings, data may be extracted, analyzed, and stored in an extract and process ("EP") raw data archive **5764**. In embodiments, various reports from a reports module **5768** are generated from the supervisory module **5752**. The various reports from the reports module **5768** include trend plots of various smart bands, overalls along with statistical patterns, and the like. In embodiments, the reports module **5768** may also be configured to compare incoming data to historical data. By way of these examples, the reports module **5768** may search for and analyze adverse trends, sudden changes, machinery defect patterns, and the like. In embodiments, the PARA server **5750** may include an expert analysis module **5770** from which reports are generated and analysis may be conducted. Upon completion, archived data may be fed to a local master server ("LMS") **5772** via a server module **5774** that may connect to the local area network. In embodiments, archived data may also be fed to the LMS **5772** via a cloud data management server ("CDMS") **5778** through a server module for a cloud network facility **5080**. In embodiments, the supervisory module **5752** on the PARA server **5750** may be configured to provide at least one of processing, analysis, reporting, archiving, supervisory, and similar functionalities from which alarms may be generated, rated, stored, modified, reassigned, and the like with an alarm generator module **5782**.

**[0437]** FIG. **34** depicts various embodiments that include a PARA server **5800** and its connection to LAN **5802**. In embodiments, one or more DAQ instruments such as the DAQ instrument **5002** may receive and process analog data from one or more analog sensors **5710** that may be fed into the DAQ instrument **5002**. As discussed herein, the DAQ instrument **5002** may create a digital stream of data based on the ingested analog data from the one or more analog sensors. The digital stream from the DAQ instrument **5002** may be uploaded to the MRDS **5082** and from there, it may be sent to the PARA server **5800** where multiple terminals, such as terminal **5810** **5812**, **5814**, may each interface with it or the MRDS **5082** and view the data and/or analysis reports. In embodiments, the PARA server **5800** may communicate with a network data server **5820** that may include a LMS **5822**. In these examples, the LMS **5822** may be configured as an optional storage area for archived data. The LMS **5822** may also be configured as an external driver that may be connected to a PC or other computing device that may run the LMS **5822**; or the LMS **5822** may be directly run by the PARA server **5800** where the LMS **5822** may be configured to operate and coexist with the PARA server **5800**. The LMS **5822** may connect with a raw data stream archive **5824**, an extract and process ("EP") raw data archive **5828**, and a MMP and probe control, sequence and analytical ("PCSA") information store **5830**. In embodiments, a CDMS **5832** may also connect to the LAN **5802** and may also support the archiving of data.

**[0438]** In embodiments, portable connected devices **5850** such as a tablet **5852** and a smart phone **5854** may connect the CDMS **5832** using web APIs **5860** and **5862**, respectively, as depicted in FIG. **35**. The APIs **5860**, **5862** may be configured to execute in a browser and may permit access via a cloud network facility **5870** of all (or some of) the functions previously discussed as accessible through the PARA Server **5800**. In embodiments, computing devices of a user **5880** such as computing devices **5882**, **5884**, **5888** may also access the cloud network facility **5870** via a browser or other connection in order to receive the same functionality. In embodiments, thin-client apps which do not require any other device drivers and may be facilitated by web services supported by cloud services **5890** and cloud data **5892**. In many examples, the thin-client apps may be developed and reconfigured using, for example, the visual high-level LabVIEW™ programming language with NXG™ Web-based virtual interface subroutines. In embodiments, thin client apps may provide high-level graphing functions such as those supported by LabVIEW™ tools. In embodiments, the LabVIEW™ tools may generate JSCRIPT™ code and JAVA™ code that may be edited post-compilation. The NXG™ tools may generate Web VI's that may not require any specialized driver and only some RESTful™ services which may be readily installed from any browser. It will be appreciated in light of the disclosure that because various applications may be run inside a browser, the applications may be run on any operating system, such as Windows™, Linux™, and Android™ operating systems especially for personal devices, mobile devices, portable connected devices, and the like.

**[0439]** In embodiments, the CDMS **5832** is depicted in greater detail in FIG. **36**. In embodiments, the CDMS **5832** may provide all of the data storage and services that the PARA Server **5800** (FIG. **34**) may provide. In contrast, all of the API's may be web API's which may run in a browser and

all other apps may run on the PARA Server **5800** or the DAQ instrument **5002** which may typically be Windows™, Linux™ or other similar operating systems. In embodiments, the CDMS **5832** includes at least one of or combinations of the following functions: the CDMS **5832** may include a cloud GUI **5900** that may be configured to provide access to all data plots including trend, waveform, spectra, envelope, transfer function, logs of measurement events, analysis including expert, utilities, and the like. In embodiments, the CDMS **5832** may include a cloud data exchange **5902** configured to facilitate the transfer of data to and from the cloud network facility **5870**. In embodiments, the CDMS **5832** may include a cloud plots/trends module **5904** that may be configured to show all plots via web apps including trend, waveform, spectra, envelope, transfer function, and the like. In embodiments, the CDMS **5832** may include a cloud reporter **5908** that may be configured to provide all analysis reports, logs, expert analysis, trend plots, statistical information, and the like. In embodiments, the CDMS **5832** may include a cloud alarm module **5910**. Alarms from the cloud alarm module **5910** may be generated and may be sent to various devices **5920** via email, texts, or other messaging mechanisms. From the various modules, data may be stored in new data **5914**. The various devices **5920** may include a terminal **5922**, portable connected device **5924**, or a tablet **5928**. The alarms from the cloud alarm module are designed to be interactive so that the end user may acknowledge alarms in order to avoid receiving redundant alarms and also to see significant context-sensitive data from the alarm points that may include spectra, waveform statistical info, and the like.

**[0440]** In embodiments, a relational database server ("RDS") **5930** may be used to access all of the information from a MMP and PCSA information store **5932**. As with the PARA server **5800** (FIG. **36**), information from the information store **5932** may be used with an EP and align module **5934**, a data exchange **5938** and the expert system **5940**. In embodiments, a raw data stream archive **5942** and extract and process raw data archive **5944** may also be used by the EP align **5934**, the data exchange **5938** and the expert system **5940** as with the PARA server **5800**. In embodiments, new stream raw data **5950**, new extract and process raw data **5952**, and new data **5954** (essentially all other raw data such as overalls, smart bands, stats, and data from the information store **5932**) are directed by the CDMS **5832**.

**[0441]** In embodiments, the streaming data may be linked with the RDS **5930** and the MMP and PCSA information store **5932** using a technical data management streaming ("TDMS") file format. In embodiments, the information store **5932** may include tables for recording at least portions of all measurement events. By way of these examples, a measurement event may be any single data capture, a stream, a snapshot, an averaged level, or an overall level. Each of the measurement events in addition to point identification information may also have a date and time stamp. In embodiments, a link may be made between the streaming data, the measurement event, and the tables in the information store **5932** using the TDMS format. By way of these examples, the link may be created by storing unique measurement point identification codes with a file structure having the TDMS format by including and assigning TDMS properties. In embodiments, a file with the TDMS format may allow for three levels of hierarchy. By way of these examples, the three levels of hierarchy may be root, group, and channel. It will be appreciated in light of the disclosure that the Mimosa™ database schema may be, in theory, unlimited. With that said, there are advantages to limited TDMS hierarchies. In the many examples, the following properties may be proposed for adding to the TDMS Stream structure while using a Mimosa Compatible database schema.

**[0442]** Root Level: Global ID 1: Text String (This could be a unique ID obtained from the web.); Global ID 2: Text String (This could be an additional ID obtained from the web.); Company Name: Text String; Company ID: Text String; Company Segment ID: 4-byte Integer; Company Segment ID: 4-byte Integer; Site Name: Text String; Site Segment ID: 4-byte Integer; Site Asset ID: 4-byte Integer; Route Name: Text String; Version Number: Text String

**[0443]** Group Level: Section 1 Name: Text String; Section 1 Segment ID: 4-byte Integer; Section 1 Asset ID: 4-byte Integer; Section 2 Name: Text String; Section 2 Segment ID: 4-byte Integer; Section 2 Asset ID: 4-byte Integer; Machine Name: Text String; Machine Segment ID: 4-byte Integer; Machine Asset ID: 4-byte Integer; Equipment Name: Text String; Equipment Segment ID: 4-byte Integer; Equipment Asset ID: 4-byte Integer; Shaft Name: Text String; Shaft Segment ID: 4-byte Integer; Shaft Asset ID: 4-byte Integer; Bearing Name: Text String; Bearing Segment ID: 4-byte Integer; Bearing Asset ID: 4-byte Integer; Probe Name: Text String; Probe Segment ID: 4-byte Integer; Probe Asset ID: 4-byte Integer

**[0444]** Channel Level: Channel #: 4-byte Integer; Direction: 4-byte Integer (in certain examples may be text); Data Type: 4-byte Integer; Reserved Name 1: Text String; Reserved Segment ID 1: 4-byte Integer; Reserved Name 2: Text String; Reserved Segment ID 2: 4-byte Integer; Reserved Name 3: Text String; Reserved Segment ID 3: 4-byte Integer

**[0445]** In embodiments, the file with the TDMS format may automatically use property or asset information and may make an index file out of the specific property and asset information to facilitate database searches, may offer a compromise for storing voluminous streams of data because it may be optimized for storing binary streams of data but may also include some minimal database structure making many standard SQL operations feasible, but the TDMS format and functionality discussed herein may not be as efficient as a full-fledged SQL relational database. The TDMS format, however, may take advantage of both worlds in that it may balance between the class or format of writing and storing large streams of binary data efficiently and the class or format of a fully relational database, which facilitates searching, sorting and data retrieval. In embodiments, an optimum solution may be found in that metadata required for analytical purposes and extracting prescribed lists with panel conditions for stream collection may be stored in the RDS **5930** by establishing a link between the two database methodologies. By way of these examples, relatively large analog data streams may be stored predominantly as binary storage in the raw data stream archive **5942** for rapid stream loading but with inherent relational SQL type hooks, formats, conventions, or the like. The files with the TDMS format may also be configured to incorporate DIAdem™ reporting capability of LabVIEW™ software in order to provide a further mechanism to conveniently and rapidly facilitate accessing the analog or the streaming data.

**[0446]** The methods and systems disclosed herein may include, connect to, or be integrated with a virtual data acquisition instrument and in the many embodiments, FIG. **37** shows methods and systems that include a virtual streaming DAQ instrument **6000** also known as a virtual DAQ instrument, a VRDS, or a VSDAQ. In contrast to the DAQ instrument **5002** (FIG. **22**), the virtual DAQ instrument **6000** may be configured so to only include one native application. In the many examples, the one permitted and one native application may be the DAQ driver module **6002** that may manage all communications with the DAQ Device **6004** which may include streaming capabilities. In embodiments, other applications, if any, may be configured as thin client web applications such as RESTful™ web services. The one native application, or other applications or services, may be accessible through the DAQ Web API **6010**. The DAQ Web API **6010** may run in or be accessible through various web browsers.

**[0447]** In embodiments, storage of streaming data, as well as the extraction and processing of streaming data into extract and process data, may be handled primarily by the DAQ driver services **6012** under the direction of the DAQ Web API **6010**. In embodiments, the output from sensors of various types including vibration, temperature, pressure, ultrasound and so on may be fed into the instrument inputs of the DAQ device **6004**. In embodiments, the signals from the output sensors may be signal conditioned with respect to scaling and filtering and digitized with an analog to a digital converter. In embodiments, the signals from the output sensors may be signals from all relevant channels simultaneously sampled at a rate sufficient to perform the maximum desired frequency analysis. In embodiments, the signals from the output sensors may be sampled for a relatively long time, gap-free, as one continuous stream so as to enable a wide array of further post-processing at lower sampling rates with sufficient samples. In further examples, streaming frequency may be adjusted (and readjusted) to record streaming data at non-evenly spaced recording. For temperature data, pressure data, and other similar data that may be relatively slow, varying delta times between samples may further improve quality of the data. By way of the above examples, data may be streamed from a collection of points and then the next set of data may be collected from additional points according to a prescribed sequence, route, path, or the like. In the many examples, the portable sensors may be moved to the next location according to the prescribed sequence but not necessarily all of them as some may be used for reference phase or otherwise. In further examples, a multiplexer **6020** may be used to switch to the next collection of points or a mixture of the two methods may be combined.

**[0448]** In embodiments, the sequence and panel conditions that may be used to govern the data collection process using the virtual DAQ instrument **6000** may be obtained from the MMP PCSA information store **6022**. The MMP PCSA information store **6022** may include such items as the hierarchical structural relationships of the machine, i.e., a machine contains pieces of equipment in which each piece of equipment contains shafts and each shaft is associated with bearings, which may be monitored by specific types of transducers or probes according to a specific prescribed sequence (routes, path, etc.) with specific panel conditions. By way of these examples, the panel conditions may include hardware specific switch settings or other collection parameters such as sampling rate, AC/DC coupling, voltage range and gain, integration, high and low pass filtering, anti-aliasing filtering, ICP™ transducers and other integrated-circuit piezoelectric transducers, 4-20 mA loop sensors, and the like. The information store **6022** includes other information that may be stored in what would be machinery specific features that would be important for proper analysis including the number of gear teeth for a gear, the number of blades in a pump impeller, the number of motor rotor bars, bearing specific parameters necessary for calculating bearing frequencies, 1x rotating speed (RPMs) of all rotating elements, and the like.

**[0449]** Upon direction of the DAQ Web API **6010** software, digitized waveforms may be uploaded using the DAQ driver services **6012** of the virtual DAQ instrument **6000**. In embodiments, data may then be fed into an RLN data and control server **6030** that may store the stream data into a network stream data repository **6032**. Unlike the DAQ instrument **5002**, the server **6030** may run from within the DAQ driver module **6002**. It will be appreciated in light of the disclosure that a separate application may require drivers for running in the native operating system and for this instrument only the instrument driver may run natively. In many examples, all other applications may be configured to be browser based. As such, a relevant network variable may be very similar to a LabVIEW™ shared or network stream variable which may be designed to be accessed over one or more networks or via web applications.

**[0450]** In embodiments, the DAQ web API **6010** may also direct the local data control application **6034** to extract and process the recently obtained streaming data and, in turn, convert it to the same or lower sampling rates of sufficient length to provide the desired resolution. This data may be converted to spectra, then averaged and processed in a variety of ways and stored as EP data, such as on an EP data repository **6040**. The EP data repository **6040** may, in certain embodiments, only be meant for temporary storage. It will be appreciated in light of the disclosure that legacy data may require its own sampling rates and resolution and often this sampling rate may not be integer proportional to the acquired sampling rate especially for order-sampled data whose sampling frequency is related directly to an external frequency. The external frequency may typically be the running speed of the machine or its internal componentry, rather than the more-standard sampling rates produced by the internal crystals, clock functions, and the like of the (e.g., values of Fmax of 100, 200, 500, 1K, 2K, 5K, 10K, 20K and so on) of the DAQ instrument **5002**, **6000**. In embodiments, the EP align component of the local data control application **6034** is able to fractionally adjust the sampling rate to the non-integer ratio rates that may be more applicable to legacy data sets and therefore drive compatibility with legacy systems. In embodiments, the fractional rates may be converted to integer ratio rates more readily because the length of the data to be processed (or at least that portion of the greater stream of data) is adjustable because of the depth and content of the original acquired streaming data by the DAQ instrument **5002**, **6000**. It will be appreciated in light of the disclosure that if the data was not streamed and just stored as traditional snap-shots of spectra with the standard values of Fmax, it may very well be impossible to retroactively and accurately convert the acquired data to the order-sampled data. In embodiments, the stream data may be converted, especially for legacy data purposes, to the proper sampling

rate and resolution as described and stored in the EP legacy data repository **6042**. To support legacy data identification scenarios, a user input **6044** may be included if there is no automated process for identification translation. In embodiments, one such automated process for identification translation may include importation of data from a legacy system that may contain a fully standardized format such as the Mimosa™ format and sufficient identification information to complete an ID Mapping Table **6048**. In further examples, the end user, a legacy data vendor, a legacy data storage facility, or the like may be able to supply enough info to complete (or sufficiently complete) relevant portions of the ID Mapping Table **6048** to provide, in turn, the database schema for the raw data of the legacy system so it may be readily ingested, saved, and used for analytics in the current systems disclosed herein.

**[0451]** FIG. **38** depicts further embodiments and details of the virtual DAQ Instrument **6000**. In these examples, the DAQ Web API **6010** may control the data collection process as well as its sequence. The DAQ Web API **6010** may provide the capability for editing this process, viewing plots of the data, controlling the processing of that data and viewing the output in all its myriad forms, analyzing the data, including the expert analysis, communicating with external devices via the DAQ driver module **6002**, as well as communicating with and transferring both streaming data and EP data to one or more cloud network facilities **5080** whenever possible. In embodiments, the virtual DAQ instrument itself and the DAQ Web API **6010** may run independently of access to cloud network facilities **5080** when local demands may require or simply as a result of there being no outside connectivity such use throughout a proprietary industrial setting that prevents such signals. In embodiments, the DAQ Web API **6010** may also govern the movement of data, its filtering, as well as many other housekeeping functions.

**[0452]** The virtual DAQ Instrument **6000** may also include an expert analysis module **6052**. In embodiments, the expert analysis module **6052** may be a web application or other suitable module that may generate reports **6054** that may use machine or measurement point specific information from the MMP PCSA information store **6022** to analyze stream data **6058** using the stream data analyzer module **6050**. In embodiments, supervisory control of the module **6052** may be provided by the DAQ Web API **6010**. In embodiments, the expert analysis may also be supplied (or supplemented) via the expert system module **5940** that may be resident on one or more cloud network facilities that are accessible via the CDMS **5832**. In many examples, expert analysis via the cloud may be preferred over local systems such as expert analysis module **6052** for various reasons, such as the availability and use of the most up-to-date software version, more processing capability, a bigger volume of historical data to reference and the like. It will be appreciated in light of the disclosure that it may be important to offer expert analysis when an internet connection cannot be established so as to provide a redundancy, when needed, for seamless and time efficient operation. In embodiments, this redundancy may be extended to all of the discussed modular software applications and databases where applicable so each module discussed herein may be configured to provide redundancy to continue operation in the absence of an internet connection.

**[0453]** FIG. **39** depicts further embodiments and details of many virtual DAQ instruments existing in an online system and connecting through network endpoints through a central DAQ instrument to one or more cloud network facilities. In embodiments, a master DAQ instrument with network endpoint **6060** is provided along with additional DAQ instruments such as a DAQ instrument with network endpoint **6062**, a DAQ instrument with network endpoint **6064**, and a DAQ instrument with network endpoint **6068**. The master DAQ instrument with network endpoint **6060** may connect with the other DAQ instruments with network endpoints **6062**, **6064**, **6068** over LAN **6070**. It will be appreciated that each of the instruments **6060**, **6062**, **6064**, **6068** may include personal computer, a connected device, or the like that include Windows™, Linux™, or other suitable operating systems to facilitate ease of connection of devices utilizing many wired and wireless network options such as Ethernet, wireless 802.11g, 900 MHz wireless (e.g., for better penetration of walls, enclosures and other structural barriers commonly encountered in an industrial setting), as well as a myriad of other things permitted by the use of off-the-shelf communication hardware when needed.

**[0454]** FIG. **40** depicts further embodiments and details of many functional components of an endpoint that may be used in the various settings, environments, and network connectivity settings. The endpoint includes endpoint hardware modules **6080**. In embodiments, the endpoint hardware modules **6080** may include one or more multiplexers **6082**, a DAQ instrument **6084**, as well as a computer **6088**, computing device, PC, or the like that may include the multiplexers, DAQ instruments, and computers, connected devices and the like, as disclosed herein. The endpoint software modules **6090** include a data collector application (DCA) **6092** and a raw data server (RDS) **6094**. In embodiments, DCA **6092** may be similar to the DAQ API **5052** (FIG. **22**) and may be configured to be responsible for obtaining stream data from the DAQ device **6084** and storing it locally according to a prescribed sequence or upon user directives. In the many examples, the prescribed sequence or user directives may be a LabVIEW™ software app that may control and read data from the DAQ instruments. For cloud based online systems, the stored data in many embodiments may be network accessible. In many examples, LabVIEW™ tools may be used to accomplish this with a shared variable or network stream (or subsets of shared variables). Shared variables and the affiliated network streams may be network objects that may be optimized for sharing data over the network. In many embodiments, the DCA **6092** may be configured with a graphic user interface that may be configured to collect data as efficiently and fast as possible and push it to the shared variable and its affiliated network stream. In embodiments, the endpoint raw data server **6094** may be configured to read raw data from the single-process shared variable and may place it with a master network stream. In embodiments, a raw stream of data from portable systems may be stored locally and temporarily until the raw stream of data is pushed to the MRDS **5082** (FIG. **22**). It will be appreciated in light of the disclosure that on-line system instruments on a network can be termed endpoints whether local or remote or associated with a local area network or a wide area network. For portable data collector applications that may or may not be wirelessly connected to one or more cloud network facili-

ties, the endpoint term may be omitted as described so as to detail an instrument that may not require network connectivity.

**[0455]** FIG. **41** depicts further embodiments and details of multiple endpoints with their respective software blocks with at least one of the devices configured as master blocks. Each of the blocks may include a data collector application ("DCA") **7000** and a raw data server ("RDS") **7002**. In embodiments, each of the blocks may also include a master raw data server module ("MRDS") **7004**, a master data collection and analysis module ("MDCA") **7008**, and a supervisory and control interface module ("SCI") **7010**. The MRDS **7004** may be configured to read network stream data (at a minimum) from the other endpoints and may forward it up to one or more cloud network facilities via the CDMS **5832** including the cloud services **5890** and the cloud data **5892**. In embodiments, the CDMS **5832** may be configured to store the data and to provide web, data, and processing services. In these examples, this may be implemented with a LabVIEW™ application that may be configured to read data from the network streams or share variables from all of the local endpoints, write them to the local host PC, local computing device, connected device, or the like, as both a network stream and file with TDMS™ formatting. In embodiments, the CDMS **5832** may also be configured to then post this data to the appropriate buckets using the LabVIEW or similar software that may be supported by S3™ web service from the Amazon Web Services ("AWS™") on the Amazon™ web server, or the like and may effectively serve as a back-end server. In the many examples, different criteria may be enabled or may be set up for when to post data, create or adjust schedules, create or adjust event triggering including a new data event, create a buffer full message, create or more alarms messages, and the like.

**[0456]** In embodiments, the MDCA **7008** may be configured to provide automated as well as user-directed analyses of the raw data that may include tracking and annotating specific occurrence and in doing so, noting where reports may be generated and alarms may be noted. In embodiments, the SCI **7010** may be an application configured to provide remote control of the system from the cloud as well as the ability to generate status and alarms. In embodiments, the SCI **7010** may be configured to connect to, interface with, or be integrated into a supervisory control and data acquisition ("SCADA") control system. In embodiments, the SCI **7010** may be configured as a LabVIEW™ application that may provide remote control and status alerts that may be provided to any remote device that may connect to one or more of the cloud network facilities **5870**.

**[0457]** In embodiments, the equipment that is being monitored may include RFID tags that may provide vital machinery analysis background information. The RFID tags may be associated with the entire machine or associated with the individual componentry and may be substituted when certain parts of the machine are replaced, repaired, or rebuilt. The RFID tags may provide permanent information relevant to the lifetime of the unit or may also be re-flashed to update with at least a portion of new information. In many embodiments, the DAQ instruments **5002** disclosed herein may interrogate the one or more RFID chips to learn of the machine, its componentry, its service history, and the hierarchical structure of how everything is connected including drive diagrams, wire diagrams, and hydraulic layouts. In embodiments, some of the information that may be retrieved from the RFID tags includes manufacturer, machinery type, model, serial number, model number, manufacturing date, installation date, lots numbers, and the like. By way of these examples, machinery type may include the use of a Mimosa™ format table including information about one or more of the following motors, gearboxes, fans, and compressors. The machinery type may also include the number of bearings, their type, their positioning, and their identification numbers. The information relevant to one or more fans includes fan type, number of blades, number of vanes, and number of belts. It will be appreciated in light of the disclosure that other machines and their componentry may be similarly arranged hierarchically with relevant information all of which may be available through interrogation of one or more RFID chips associated with the one or more machines.

**[0458]** In embodiments, data collection in an industrial environment may include routing analog signals from a plurality of sources, such as analog sensors, to a plurality of analog signal processing circuits. Routing of analog signals may be accomplished by an analog crosspoint switch that may route any of a plurality of analog input signals to any of a plurality of outputs, such as to analog and/or digital outputs. Routing of inputs to outputs in an analog signal crosspoint switch in an industrial environment may be configurable, such as by an electronic signal to which a switch portion of the analog crosspoint switch is responsive.

**[0459]** In embodiments, the analog crosspoint switch may receive analog signals from a plurality of analog signal sources in the industrial environment. Analog signal sources may include sensors that produce an analog signal. Sensors that produce an analog signal that may be switched by the analog crosspoint switch may include sensors that detect a condition and convert it to an analog signal that may be representative of the condition, such as converting a condition to a corresponding voltage. Exemplary conditions that may be represented by a variable voltage may include temperature, friction, sound, light, torque, revolutions-per-minute, mechanical resistance, pressure, flow rate, and the like, including any of the conditions represented by inputs sources and sensors disclosed throughout this disclosure and the documents incorporated herein by reference. Other forms of analog signal may include electrical signals, such as variable voltage, variable current, variable resistance, and the like.

**[0460]** In embodiments, the analog crosspoint switch may preserve one or more aspects of an analog signal being input to it in an industrial environment. Analog circuits integrated into the switch may provide buffered outputs. The analog circuits of the analog crosspoint switch may follow an input signal, such as an input voltage to produce a buffered representation on an output. This may alternatively be accomplished by relays (mechanical, solid state, and the like) that allow an analog voltage or current present on an input to propagate to a selected output of the analog switch.

**[0461]** In embodiments, an analog crosspoint switch in an industrial environment may be configured to switch any of a plurality of analog inputs to any of a plurality of analog outputs. An example embodiment includes a MIMO, multiplexed configuration. An analog crosspoint switch may be dynamically configurable so that changes to the configuration causes a change in the mapping of inputs to outputs. A configuration change may apply to one or more mappings so

that a change in mapping may result in one or more of the outputs being mapped to different input than before the configuration change.

**[0462]** In embodiments, the analog crosspoint switch may have more inputs than outputs, so that only a subset of inputs can be routed to outputs concurrently. In other embodiments, the analog crosspoint switch may have more outputs than inputs, so that either a single input may be made available currently on multiple outputs, or at least one output may not be mapped to any input.

**[0463]** In embodiments, an analog crosspoint switch in an industrial environment may be configured to switch any of a plurality of analog inputs to any of a plurality of digital outputs. To accomplish conversion from analog inputs to digital outputs, an analog-to-digital converter circuit may be configured on each input, each output, or at intermediate points between the input(s) and output(s) of the analog crosspoint switch. Benefits of including digitization of analog signals in an analog crosspoint switch that may be located close to analog signal sources may include reducing signal transport costs and complexity that digital signal communication has over analog, reducing energy consumption, facilitating detection and regulation of aberrant conditions before they propagate throughout an industrial environment, and the like. Capturing analog signals close to their source may also facilitate improved signal routing management that is more tolerant of real world effects such as requiring that multiple signals be routed simultaneously. In this example, a portion of the signals can be captured (and stored) locally while another portion can be transferred through the data collection network. Once the data collection network has available bandwidth, the locally stored signals can be delivered, such as with a time stamp indicating the time at which the data was collected. This technique may be useful for applications that have concurrent demand for data collection channels that exceed the number of channels available. Sampling control may also be based on an indication of data worth sampling. As an example, a signal source, such as a sensor in an industrial environment may provide a data valid signal that transmits an indication of when data from the sensor is available.

**[0464]** In embodiments, mapping inputs of the analog crosspoint switch to outputs may be based on a signal route plan for a portion of the industrial environment that may be presented to the crosspoint switch. The signal route plan may be used in a method of data collection in the industrial environment that may include routing a plurality of analog signals along a plurality of analog signal paths. The method may include connecting the plurality of analog signals individually to inputs of the analog crosspoint switch that may be configured with a route plan. The crosspoint switch may, responsively to the configured route plan, route a portion of the plurality of analog signals to a portion of the plurality of analog signal paths.

**[0465]** In embodiments, the analog crosspoint switch may include at least one high current output drive circuit that may be suitable for routing the analog signal along a path that requires high current. In embodiments, the analog crosspoint switch may include at least one voltage-limited input that may facilitate protecting the analog crosspoint switch from damage due to excessive analog input signal voltage. In embodiments, the analog crosspoint switch may include at least one current limited input that may facilitate protecting the analog crosspoint switch from damage due to excessive analog input current. The analog crosspoint switch may comprise a plurality of interconnected relays that may facilitate routing the input(s) to the output(s) with little or no substantive signal loss.

**[0466]** In embodiments, an analog crosspoint switch may include processing functionality, such as signal processing and the like (e.g., a programmed processor, special purpose processor, a digital signal processor, and the like) that may detect one or more analog input signal conditions. In response to such detection, one or more actions may be performed, such as setting an alarm, sending an alarm signal to another device in the industrial environment, changing the crosspoint switch configuration, disabling one or more outputs, powering on or off a portion of the switch, changing a state of an output, such as a general purpose digital or analog output, and the like. In embodiments, the switch may be configured to process inputs for producing a signal on one or more of the outputs. The inputs to use, processing algorithm for the inputs, condition for producing the signal, output to use, and the like may be configured in a data collection template.

**[0467]** In embodiments, an analog crosspoint switch may comprise greater than 32 inputs and greater than 32 outputs. A plurality of analog crosspoint switches may be configured so that even though each switch offers fewer than 32 inputs and 32 outputs it may be configured to facilitate switching any of 32 inputs to any of 32 outputs spread across the plurality of crosspoint switches.

**[0468]** In embodiments, an analog crosspoint switch suitable for use in an industrial environment may comprise four or fewer inputs and four or fewer outputs. Each output may be configurable to produce an analog output that corresponds to the mapped analog input or it may be configured to produce a digital representation of the corresponding mapped input.

**[0469]** In embodiments, an analog crosspoint switch for use in an industrial environment may be configured with circuits that facilitate replicating at least a portion of attributes of the input signal, such as current, voltage range, offset, frequency, duty cycle, ramp rate, and the like while buffering (e.g., isolating) the input signal from the output signal. Alternatively, an analog crosspoint switch may be configured with unbuffered inputs/outputs, thereby effectively producing a bi-directional based crosspoint switch).

**[0470]** In embodiments, an analog crosspoint switch for use in an industrial environment may include protected inputs that may be protected from damaging conditions, such as through use of signal conditioning circuits. Protected inputs may prevent damage to the switch and to downstream devices to which the switch outputs connect. As an example, inputs to such an analog crosspoint switch may include voltage clipping circuits that prevent a voltage of an input signal from exceeding an input protection threshold. An active voltage adjustment circuit may scale an input signal by reducing it uniformly so that a maximum voltage present on the input does not exceed a safe threshold value. As another example, inputs to such an analog crosspoint switch may include current shunting circuits that cause current beyond a maximum input protection current threshold to be diverted through protection circuits rather than enter the switch. Analog switch inputs may be protected from electrostatic discharge and/or lightning strikes. Other signal conditioning functions that may be applied to inputs to an analog crosspoint switch may include voltage scaling cir-

cuitry that attempts to facilitate distinguishing between valid input signals and low voltage noise that may be present on the input. However, in embodiments, inputs to the analog crosspoint switch may be unbuffered and/or unprotected to make the least impact on the signal. Signals such as alarm signals, or signals that cannot readily tolerate protection schemes, such as those schemes described above herein may be connected to unbuffered inputs of the analog crosspoint switch.

**[0471]** In embodiments, an analog crosspoint switch may be configured with circuitry, logic, and/or processing elements that may facilitate input signal alarm monitoring. Such an analog crosspoint switch may detect inputs meeting alarm conditions and in response thereto, switch inputs, switch mapping of inputs to outputs, disable inputs, disable outputs, issue an alarm signal, activate/deactivate a general-purpose output, or the like.

**[0472]** In embodiments, a system for collecting data in an industrial environment may include an analog crosspoint switch that may be adapted to selectively power up or down portions of the analog crosspoint switch or circuitry associated with the analog crosspoint switch, such as input protection devices, input conditioning devices, switch control devices and the like. Portions of the analog crosspoint switch that may be powered on/off may include outputs, inputs, sections of the switch and the like. In an example, an analog crosspoint switch may include a modular structure that may separate portions of the switch into independently powered sections. Based on conditions, such as an input signal meeting a criterion or a configuration value being presented to the analog crosspoint switch, one or more modular sections may be powered on/off.

**[0473]** In embodiments, a system for collecting data in an industrial environment may include an analog crosspoint switch that may be adapted to perform signal processing including, without limitation, providing a voltage reference for detecting an input crossing the voltage reference (e.g., zero volts for detecting zero-crossing signals), a phase-lock loop to facilitate capturing slow frequency signals (e.g., low-speed revolution-per-minute signals and detecting their corresponding phase), deriving input signal phase relative to other inputs, deriving input signal phase relative to a reference (e.g., a reference clock), deriving input signal phase relative to detected alarm input conditions and the like. Other signal processing functions of such an analog crosspoint switch may include oversampling of inputs for delta-sigma A/D, to produce lower sampling rate outputs, to minimize AA filter requirements and the like. Such an analog crosspoint switch may support long block sampling at a constant sampling rate even as inputs are switched, which may facilitate input signal rate independence and reduce complexity of sampling scheme(s). A constant sampling rate may be selected from a plurality of rates that may be produced by a circuit, such as a clock divider circuit that may make available a plurality of components of a reference clock.

**[0474]** In embodiments, a system for collecting data in an industrial environment may include an analog crosspoint switch that may be adapted to support implementing data collection/data routing templates in the industrial environment. The analog crosspoint switch may implement a data collection/data routing template based on conditions in the industrial environment that it may detect or derive, such as an input signal meeting one or more criteria (e.g., transition of a signal from a first condition to a second, lack of transition of an input signal within a predefined time interface (e.g., inactive input) and the like).

**[0475]** In embodiments, a system for collecting data in an industrial environment may include an analog crosspoint switch that may be adapted to be configured from a portion of a data collection template. Configuration may be done automatically (without needing human intervention to perform a configuration action or change in configuration), such as based on a time parameter in the template and the like. Configuration may be done remotely, e.g., by sending a signal from a remote location that is detectable by a switch configuration feature of the analog crosspoint switch. Configuration may be done dynamically, such as based on a condition that is detectable by a configuration feature of the analog crosspoint switch (e.g., a timer, an input condition, an output condition, and the like). In embodiments, information for configuring an analog crosspoint switch may be provided in a stream, as a set of control lines, as a data file, as an indexed data set, and the like. In embodiments, configuration information in a data collection template for the switch may include a list of each input and a corresponding output, a list of each output function (active, inactive, analog, digital and the like), a condition for updating the configuration (e.g., an input signal meeting a condition, a trigger signal, a time (relative to another time/event/state, or absolute), a duration of the configuration, and the like. In embodiments, configuration of the switch may be input signal protocol aware so that switching from a first input to a second input for a given output may occur based on the protocol. In an example, a configuration change may be initiated with the switch to switch from a first video signal to a second video signal. The configuration circuitry may detect the protocol of the input signal and switch to the second video signal during a synchronization phase of the video signal, such as during horizontal or vertical refresh. In other examples, switching may occur when one or more of the inputs are at zero volts. This may occur for a sinusoidal signal that transitions from below zero volts to above zero volts.

**[0476]** In embodiments, a system for collecting data in an industrial environment may include an analog crosspoint switch that may be adapted to provide digital outputs by converting analog signals input to the switch into digital outputs. Converting may occur after switching the analog inputs based on a data collection template and the like. In embodiments, a portion of the switch outputs may be digital and a portion may be analog. Each output, or groups thereof, may be configurable as analog or digital, such as based on analog crosspoint switch output configuration information included in or derived from a data collection template. Circuitry in the analog crosspoint switch may sense an input signal voltage range and intelligently configure an analog-to-digital conversion function accordingly. As an example, a first input may have a voltage range of 12 volts and a second input may have a voltage range of 24 volts. Analog-to-digital converter circuits for these inputs may be adjusted so that the full range of the digital value (e.g., 256 levels for an 8-bit signal) will map substantially linearly to 12 volts for the first input and 24 volts for the second input.

**[0477]** In embodiments, an analog crosspoint switch may automatically configure input circuitry based on characteristics of a connected analog signal. Examples of circuitry configuration may include setting a maximum voltage, a threshold based on a sensed maximum threshold, a voltage

range above and/or below a ground reference, an offset reference, and the like. The analog crosspoint switch may also adapt inputs to support voltage signals, current signals, and the like. The analog crosspoint switch may detect a protocol of an input signal, such as a video signal protocol, audio signal protocol, digital signal protocol, protocol based on input signal frequency characteristics, and the like. Other aspects of inputs of the analog crosspoint switch that may be adapted based on the incoming signal may include a duration of sampling of the signal, and comparator or differential type signals, and the like.

**[0478]** In embodiments, an analog crosspoint switch may be configured with functionality to counteract input signal drift and/or leakage that may occur when an analog signal is passed through it over a long period of time without changing value (e.g., a constant voltage). Techniques may include voltage boost, current injection, periodic zero referencing (e.g., temporarily connecting the input to a reference signal, such as ground, applying a high resistance pathway to the ground reference, and the like).

**[0479]** In embodiments, a system for data collection in an industrial environment may include an analog crosspoint switch deployed in an assembly line comprising conveyers and/or lifters. A power roller conveyor system includes many rollers that deliver product along a path. There may be many points along the path that may be monitored for proper operation of the rollers, load being placed on the rollers, accumulation of products, and the like. A power roller conveyor system may also facilitate moving product through longer distances and therefore may have a large number of products in transport at once. A system for data collection in such an assembly environment may include sensors that detect a wide range of conditions as well as at a large number of positions along the transport path. As a product progresses down the path, some sensors may be active and others, such as those that the product has passed may be inactive. A data collection system may use an analog crosspoint switch to select only those sensors that are currently or anticipated to be active by switching from inputs that connect to inactive sensors to those that connect to active sensors and thereby provide the most useful sensor signals to data detection and/or collection and/or processing facilities. In embodiments, the analog crosspoint switch may be configured by a conveyor control system that monitors product activity and instructs the analog crosspoint switch to direct different inputs to specific outputs based on a control program or data collection template associated with the assembly environment.

**[0480]** In embodiments, a system for data collection in an industrial environment may include an analog crosspoint switch deployed in a factory comprising use of fans as industrial components. In embodiments, fans in a factory setting may provide a range of functions including drying, exhaust management, clean air flow and the like. In an installation of a large number of fans, monitoring fan rotational speed, torque, and the like may be beneficial to detect an early indication of a potential problem with air flow being produced by the fans. However, concurrently monitoring each of these elements for a large number of fans may be inefficient. Therefore, sensors, such as tachometers, torque meters, and the like may be disposed at each fan and their analog output signal(s) may be provided to an analog crosspoint switch. With a limited number of outputs, or at least a limited number of systems that can process the sensor data, the analog crosspoint switch may be used to select among the many sensors and pass along a subset of the available sensor signals to data collection, monitoring, and processing systems. In an example, sensor signals from sensors disposed at a group of fans may be selected to be switched onto crosspoint switch outputs. Upon satisfactory collection and/or processing of the sensor signals for this group of fans, the analog crosspoint switch may be reconfigured to switch signals from another group of fans to be processed.

**[0481]** In embodiments, a system for data collection in an industrial environment may include an analog crosspoint switch deployed as an industrial component in a turbine-based power system. Monitoring for vibration in turbine systems, such as hydro-power systems, has been demonstrated to provide advantages in reduction in down time. However, with a large number of areas to monitor for vibration, particularly for on-line vibration monitoring, including relative shaft vibration, bearings absolute vibration, turbine cover vibration, thrust bearing axial vibration, stator core vibrations, stator bar vibrations, stator end winding vibrations, and the like, it may be beneficial to select among this list over time, such as taking samples from sensors for each of these types of vibration a few at a time. A data collection system that includes an analog crosspoint switch may provide this capability by connecting each vibration sensor to separate inputs of the analog crosspoint switch and configuring the switch to output a subset of its inputs. A vibration data processing system, such as a computer, may determine which sensors to pass through the analog crosspoint switch and configure an algorithm to perform the vibration analysis accordingly. As an example, sensors for capturing turbine cover vibration may be selected in the analog crosspoint switch to be passed on to a system that is configured with an algorithm to determine turbine cover vibration from the sensor signals Upon completion of determining turbine cover vibration, the crosspoint switch may be configured to pass along thrust bearing axial vibration sensor signals and a corresponding vibration analysis algorithm may be applied to the data. In this way, each type of vibration may be analyzed by a single processing system that works cooperatively with an analog crosspoint switch to pass specific sensor signals for processing.

**[0482]** Referring to FIG. **44**, an analog crosspoint switch for collecting data in an industrial environment is depicted. The analog crosspoint switch **7022** may have a plurality of inputs **7024** that connect to sensors **7026** in the industrial environment. The analog crosspoint switch **7022** may also comprise a plurality of outputs **7028** that connect to data collection infrastructure, such as analog-to-digital converters **7030**, analog comparators **7032**, and the like. The analog crosspoint switch **7022** may facilitate connecting one or more inputs **7024** to one or more outputs **7028** by interpreting a switch control value that may be provided to it by a controller **7034** and the like.

**[0483]** An example system for data collection in an industrial environment comprising includes analog signal sources that each connect to at least one input of an analog crosspoint switch including a plurality of inputs and a plurality of outputs; where the analog crosspoint switch is configurable to switch a portion of the input signal sources to a plurality of the outputs.

**[0484]** 2. In certain embodiments, the analog crosspoint switch further includes an analog-to-digital converter that

converts a portion of analog signals input to the crosspoint switch into representative digital signals; a portion of the outputs including analog outputs and a portion of the outputs comprises digital outputs; and/or where the analog crosspoint switch is adapted to detect one or more analog input signal conditions. Any one or more of the example embodiments include the analog input signal conditions including a voltage range of the signal, and where the analog crosspoint switch responsively adjusts input circuitry to comply with detected voltage range.

An example system of data collection in an industrial environment includes a number of industrial sensors that produce analog signals representative of a condition of an industrial machine in the environment being sensed by the number of industrial sensors, a crosspoint switch that receives the analog signals and routes the analog signals to separate analog outputs of the crosspoint switch based on a signal route plan presented to the crosspoint switch. In certain embodiments, the analog crosspoint switch further includes an analog-to-digital converter that converts a portion of analog signals input to the crosspoint switch into representative digital signals; where a portion of the outputs include analog outputs and a portion of the outputs include digital outputs; where the analog crosspoint switch is adapted to detect one or more analog input signal conditions; where the one or more analog input signal conditions include a voltage range of the signal, and/or where the analog crosspoint switch responsively adjusts input circuitry to comply with detected voltage range.

**[0485]** An example method of data collection in an industrial environment includes routing a number of analog signals along a plurality of analog signal paths by connecting the plurality of analog signals individually to inputs of an analog crosspoint switch, configuring the analog crosspoint switch with data routing information from a data collection template for the industrial environment routing, and routing with the configured analog crosspoint switch a portion of the number of analog signals to a portion the plurality of analog signal paths. In certain further embodiments, at least one output of the analog crosspoint switch includes a high current driver circuit; at least one input of the analog crosspoint switch includes a voltage limiting circuit; and/or at least one input of the analog crosspoint switch includes a current limiting circuit. In certain further embodiments, the analog crosspoint switch includes a number of interconnected relays that facilitate connecting any of a number of inputs to any of a plurality of outputs; the analog crosspoint switch further including an analog-to-digital converter that converts a portion of analog signals input to the crosspoint switch into a representative digital signal; the analog crosspoint switch further including signal processing functionality to detect one or more analog input signal conditions, and in response thereto, to perform an action (e.g., set an alarm, change switch configuration, disable one or more outputs, power off a portion of the switch, change a state of a general purpose (digital/analog) output, etc.); where a portion of the outputs are analog outputs and a portion of the outputs are digital outputs; where the analog crosspoint switch is adapted to detect one or more analog input signal conditions; where the analog crosspoint switch is adapted to take one or more actions in response to detecting the one or more analog input signal conditions, the one more actions including setting an alarm, sending an alarm signal, changing a configuration of the analog crosspoint switch, disabling an output, powering off a portion of the analog crosspoint switch, powering on a portion of the analog crosspoint switch, and/or controlling a general purpose output of the analog crosspoint switch.

**[0486]** An example system includes a power roller of a conveyor, including any of the described operations of an analog crosspoint switch. Without limitation, further example embodiments includes sensing conditions of the power roller by the sensors to determine a rate of rotation of the power roller, a load being transported by the power roller, power being consumed by the power roller, and/or a rate of acceleration of the power roller. An example system includes a fan in a factory setting, including any of the described operations of an analog crosspoint switch. Without limitation, certain further embodiments include sensors disposed to sense conditions of the fan, including a fan blade tip speed, torque, back pressure, RPMs, and/or a volume of air per unit time displaced by the fan. An example system includes a turbine in a power generation environment, including any of the described operations of an analog crosspoint switch. Without limitation, certain further embodiments include a number of sensors disposed to sense conditions of the turbine, where the sensed conditions include a relative shaft vibration, an absolute vibration of bearings, a turbine cover vibration, a thrust bearing axial vibration, vibrations of stators or stator cores, vibrations of stator bars, and/or vibrations of stator end windings.

**[0487]** In embodiments, methods and systems of data collection in an industrial environment may include a plurality of industrial condition sensing and acquisition modules that may include at least one programmable logic component per module that may control a portion of the sensing and acquisition functionality of its module. The programmable logic components on each of the modules may be interconnected by a dedicated logic bus that may include data and control channels. The dedicated logic bus may extend logically and/or physically to other programmable logic components on other sensing and acquisition modules. In embodiments, the programmable logic components may be programmed via the dedicated interconnection bus, via a dedicated programming portion of the dedicated interconnection bus, via a program that is passed between programmable logic components, sensing and acquisition modules, or whole systems. A programmable logic component for use in an industrial environment data sensing and acquisition system may be a Complex Programmable Logic Device, an Application-Specific Integrated Circuit, microcontrollers, and combinations thereof.

**[0488]** A programmable logic component in an industrial data collection environment may perform control functions associated with data collection. Control examples include power control of analog channels, sensors, analog receivers, analog switches, portions of logic modules (e.g., a logic board, system, and the like) on which the programmable logic component is disposed, self-power-up/down, self-sleep/wake up, and the like. Control functions, such as these and others, may be performed in coordination with control and operational functions of other programmable logic components, such as other components on a single data collection module and components on other such modules. Other functions that a programmable logic component may provide may include generation of a voltage reference, such as a precise voltage reference for input signal condition detection. A programmable logic component may generate, set,

reset, adjust, calibrate, or otherwise determine the voltage of the reference, its tolerance, and the like. Other functions of a programmable logic component may include enabling a digital phase lock loop to facilitate tracking slowly transitioning input signals, and further to facilitate detecting the phase of such signals. Relative phase detection may also be implemented, including phase relative to trigger signals, other analog inputs, on-board references (e.g., on-board timers), and the like. A programmable logic component may be programmed to perform input signal peak voltage detection and control input signal circuitry, such as to implement auto-scaling of the input to an operating voltage range of the input. Other functions that may be programmed into a programmable logic component may include determining an appropriate sampling frequency for sampling inputs independently of their operating frequencies. A programmable logic component may be programmed to detect a maximum frequency among a plurality of input signals and set a sampling frequency for each of the input signals that is greater than the detected maximum frequency.

**[0489]** A programmable logic component may be programmed to configure and control data routing components, such as multiplexers, crosspoint switches, analog-to-digital converters, and the like, to implement a data collection template for the industrial environment. A data collection template may be included in a program for a programmable logic component. Alternatively, an algorithm that interprets a data collection template to configure and control data routing resources in the industrial environment may be included in the program.

**[0490]** In embodiments, one or more programmable logic components in an industrial environment may be programmed to perform smart-band signal analysis and testing. Results of such analysis and testing may include triggering smart band data collection actions, that may include reconfiguring one or more data routing resources in the industrial environment. A programmable logic component may be configured to perform a portion of smart band analysis, such as collection and validation of signal activity from one or more sensors that may be local to the programmable logic component. Smart band signal analysis results from a plurality of programmable logic components may be further processed by other programmable logic components, servers, machine learning systems, and the like to determine compliance with a smart band.

**[0491]** In embodiments, one or more programmable logic components in an industrial environment may be programmed to control data routing resources and sensors for outcomes, such as reducing power consumption (e.g., powering on/off resources as needed), implementing security in the industrial environment by managing user authentication, and the like. In embodiments, certain data routing resources, such as multiplexers and the like, may be configured to support certain input signal types. A programmable logic component may configure the resources based on the type of signals to be routed to the resources. In embodiments, the programmable logic component may facilitate coordination of sensor and data routing resource signal type matching by indicating to a configurable sensor a protocol or signal type to present to the routing resource. A programmable logic component may facilitate detecting a protocol of a signal being input to a data routing resource, such as an analog crosspoint switch and the like. Based on the detected protocol, the programmable logic component may configure routing resources to facilitate support and efficient processing of the protocol. In an example, a programmable logic component configured data collection module in an industrial environment may implement an intelligent sensor interface specification, such as IEEE 1451.2 intelligent sensor interface specification.

**[0492]** In embodiments, distributing programmable logic components across a plurality of data sensing, collection, and/or routing modules in an industrial environment may facilitate greater functionality and local inter-operational control. In an example, modules may perform operational functions independently based on a program installed in one or more programmable logic components associated with each module. Two modules may be constructed with substantially identical physical components, but may perform different functions in the industrial environment based on the program(s) loaded into programmable logic component (s) on the modules. In this way, even if one module were to experience a fault, or be powered down, other modules may continue to perform their functions due at least in part to each having its own programmable logic component(s). In embodiments, configuring a plurality of programmable logic components distributed across a plurality of data collection modules in an industrial environment may facilitate scalability in terms of conditions in the environment that may be sensed, the number of data routing options for routing sensed data throughout the industrial environment, the types of conditions that may be sensed, the computing capability in the environment, and the like.

**[0493]** In embodiments, a programmable logic controller-configured data collection and routing system may facilitate validation of external systems for use as storage nodes, such as for a distributed ledger, and the like. A programmable logic component may be programmed to perform validation of a protocol for communicating with such an external system, such as an external storage node.

**[0494]** In embodiments, programming of programmable logic components, such as CPLDs and the like may be performed to accommodate a range of data sensing, collection and configuration differences. In embodiments, reprogramming may be performed on one or more components when adding and/or removing sensors, when changing sensor types, when changing sensor configurations or settings, when changing data storage configurations, when embedding data collection template(s) into device programs, when adding and/or removing data collection modules (e.g., scaling a system), when a lower cost device is used that may limit functionality or resources over a higher cost device, and the like. A programmable logic component may be programmed to propagate programs for other programmable components via a dedicated programmable logic device programming channel, via a daisy chain programming architecture, via a mesh of programmable logic components, via a hub-and-spoke architecture of interconnected components, via a ring configuration (e.g., using a communication token, and the like).

**[0495]** In embodiments, a system for data collection in an industrial environment comprising distributed programmable logic devices connected by a dedicated control bus may be deployed with drilling machines in an oil and gas harvesting environment, such as an oil and/or gas field. A drilling machine has many active portions that may be operated, monitored, and adjusted during a drilling operation. Sensors to monitor a crown block may be physically

isolated from sensors for monitoring a blowout preventer and the like. To effectively maintain control of this wide range and diverse disposition of sensors, programmable logic components, such as Complex Programmable Logic Devices ("CPLD") may be distributed throughout the drilling machine. While each CPLD may be configured with a program to facilitate operation of a limited set of sensors, at least portions of the CPLD may be connected by a dedicated bus for facilitating coordination of sensor control, operation and use. In an example, a set of sensors may be disposed proximal to a mud pump or the like to monitor flow, density, mud tank levels, and the like. One or more CPLD may be deployed with each sensor (or a group of sensors) to operate the sensors and sensor signal routing and collection resources. The CPLD in this mud pump group may be interconnected by a dedicated control bus to facilitate coordination of sensor and data collection resource control and the like. This dedicated bus may extend physically and/or logically beyond the mud pump control portion of the drill machine so that CPLD of other portions (e.g., the crown block and the like) may coordinate data collection and related activity through portions of the drilling machine.

**[0496]** In embodiments, a system for data collection in an industrial environment comprising distributed programmable logic devices connected by a dedicated control bus may be deployed with compressors in an oil and gas harvesting environment, such as an oil and/or gas field. Compressors are used in the oil and gas industry for compressing a variety of gases and purposes include flash gas, gas lift, reinjection, boosting, vapor-recovery, casing head and the like. Collecting data from sensors for these different compressor functions may require substantively different control regimes. Distributing CPLDs programmed with different control regimes is an approach that may accommodate these diverse data collection requirements. One or more CPLDs may be disposed with sets of sensors for the different compressor functions. A dedicated control bus may be used to facilitate coordination of control and/or programming of CPLDs in and across compressor instances. In an example, a CPLD may be configured to manage a data collection infrastructure for sensors disposed to collect compressor-related conditions for flash gas compression; a second CPLD or group of CPLDs may be configured to manage a data collection infrastructure for sensors disposed to collect compressor related conditions for vapor-recovery gas compression. These groups of CPLDs may operate control programs.

**[0497]** In embodiments, a system for data collection in an industrial environment comprising distributed programmable logic devices connected by a dedicated control bus may be deployed in a refinery with turbines for oil and gas production, such as with modular impulse steam turbines. A system for collection of data from impulse steam turbines may be configured with a plurality of condition sensing and collection modules adapted for specific functions of an impulse steam turbine. Distributing CPLDs along with these modules can facilitate adaptable data collection to suit individual installations. As an example, blade conditions, such as tip rotational rate, temperature rise of the blades, impulse pressure, blade acceleration rate, and the like may be captured in data collection modules configured with sensors for sensing these conditions. Other modules may be configured to collect data associated with valves (e.g., in a multi-valve configuration, one or more modules may be configured for each valve or for a set of valves), turbine exhaust (e.g., radial exhaust data collection may be configured differently than axial exhaust data collection), turbine speed sensing may be configured differently for fixed versus variable speed implementations, and the like. Additionally, impulse gas turbine systems may be installed with other systems, such as combined cycle systems, cogeneration systems, solar power generation systems, wind power generation systems, hydropower generation systems, and the like. Data collection requirements for these installations may also vary. Using a CPLD-based, modular data collection system that uses a dedicated interconnection bus for the CPLDs may facilitate programming and/or reprogramming of each module directly in place without having to shut down or physically access each module.

**[0498]** Referring to FIG. **45**, an exemplary embodiment of a system for data collection in an industrial environment comprising distributed CPLDs interconnected by a bus for control and/or programming thereof is depicted. An exemplary data collection module **7200** may comprise one or more CPLDs **7206** for controlling one or more data collection system resources, such as sensors **7202** and the like. Other data collection resources that a CPLD may control may include crosspoint switches, multiplexers, data converters, and the like. CPLDs on a module may be interconnected by a bus, such as a dedicated logic bus **7204** that may extend beyond a data collection module to CPLDs on other data collection modules. Data collection modules, such as module **7200** may be configured in the environment, such as on an industrial machine **7208** (e.g., an impulse gas turbine) and/or **7210** (e.g., a co-generation system), and the like. Control and/or configuration of the CPLDs may be handled by a controller **7212** in the environment. Data collection and routing resources and interconnection (not shown) may also be configured within and among data collection modules **7200** as well as between and among industrial machines **7208** and **7210**, and/or with external systems, such as Internet portals, data analysis servers, and the like to facilitate data collection, routing, storage, analysis, and the like.

**[0499]** An example system for data collection in an industrial environment includes a number of industrial condition sensing and acquisition modules, with a programmable logic component disposed on each of the modules, where the programmable logic component controls a portion of the sensing and acquisition functional of the corresponding module. The system includes communication bus that is dedicated to interconnecting the at least one programmable logic component disposed on at least one of the plurality of modules, wherein the communication bus extends to other programmable logic components on other sensing and acquisition modules.

**[0500]** In certain further embodiments, a system includes the programmable logic component programmed via the communication bus, the communication bus including a portion dedicated to programming of the programmable logic components, controlling a portion of the sensing and acquisition functionality of a module by a power control function such as: controlling power of a sensor, a multiplexer, a portion of the module, and/or controlling a sleep mode of the programmable logic component; controlling a portion of the sensing and acquisition functionality of a module by providing a voltage reference to a sensor and/or an analog-to-digital converter disposed on the module, by detecting a relative the phase of at least two analog signals derived from at least two sensors disposed on the module; by

controlling sampling of data provided by at least one sensor disposed on the module; by detecting a peak voltage of a signal provided by a sensor disposed on the module; and/or by configuring at least one multiplexer disposed on the module by specifying to the multiplexer a mapping of at least one input and one output. In certain embodiments, the communication bus extends to other programmable logic components on other condition sensing and/or acquisition modules. In certain embodiments, a module may be an industrial environment condition sensing module. In certain embodiments, a module control program includes an algorithm for implementing an intelligent sensor interface communication protocol, such as an IEEE1451.2 compatible intelligent sensor interface communication protocol. In certain embodiments, a programmable logic component includes configuring the programmable logic component and/or the sensing or acquisition module to implement a smart band data collection template. Example and non-limiting programmable logic components include field programmable gate arrays, complex programmable logic devices, and/or microcontrollers.

**[0501]** An example system includes a drilling machine for oil and gas field use, with a condition sensing and/or acquisition module to monitor aspects of a drilling machine. Without limitation, a further example system includes monitoring a compressor and/or monitoring an impulse steam engine.

**[0502]** In embodiments, a system for data collection in an industrial environment may include a trigger signal and at least one data signal that share a common output of a signal multiplexer and upon detection of a condition in the industrial environment, such as a state of the trigger signal, the common output is switched to propagate either the data signal or the trigger signal. Sharing an output between a data signal and a trigger signal may also facilitate reducing a number of individually routed signals in an industrial environment. Benefits of reducing individually routed signals may include reducing the number of interconnections between data collection module, thereby reducing the complexity of the industrial environment. Trade-offs for reducing individually routed signals may include increasing sophistication of logic at signal switching modules to implement the detection and conditional switching of signals A net benefit of this added localized logic complexity may be an overall reduction in the implementation complexity of such a data collection system in an industrial environment.

**[0503]** Exemplary deployment environments may include environments with trigger signal channel limitations, such as existing data collection systems that do not have separate trigger support for transporting an additional trigger signal to a module with sufficient computing sophistication to perform trigger detection. Another exemplary deployment may include systems that require at least some autonomous control for performing data collection.

**[0504]** In embodiments, a system for data collection in an industrial environment may include an analog switch that switches between a first input, such as a trigger input and a second input, such as a data input based on a condition of the first input. A trigger input may be monitored by a portion of the analog switch to detect a change in the signal, such as from a lower voltage to a higher voltage relative to a reference or trigger threshold voltage. In embodiments, a device that may receive the switched signal from the analog switch may monitor the trigger signal for a condition that indicates a condition for switching from the trigger input to the data input. When a condition of the trigger input is detected, the analog switch may be reconfigured, to direct the data input to the same output that was propagating the trigger output.

**[0505]** In embodiments, a system for data collection in an industrial environment may include an analog switch that directs a first input to an output of the analog switch until such time as the output of the analog switch indicates that a second input should be directed to the output of the analog switch. The output of the analog switch may propagate a trigger signal to the output. In response to the trigger signal propagating through the switch transitioning from a first condition (e.g., a first voltage below a trigger threshold voltage value) to a second condition (e.g., a second voltage above the trigger threshold voltage value), the switch may stop propagating the trigger signal and instead propagate another input signal to the output. In embodiments, the trigger signal and the other data signal may be related, such as the trigger signal may indicate a presence of an object being placed on a conveyer and the data signal represents a strain placed on the conveyer.

**[0506]** In embodiments, to facilitate timely detection of the trigger condition, a rate of sampling of the output of the analog switch may be adjustable, so that, for example, the rate of sampling is higher while the trigger signal is propagated and lower when the data signal is propagated. Alternatively, a rate of sampling may be fixed for either the trigger or the data signal. In embodiments, the rate of sampling may be based on a predefined time from trigger occurrence to trigger detection and may be faster than a minimum sample rate to capture the data signal.

**[0507]** In embodiments, routing a plurality of hierarchically organized triggers onto another analog channel may facilitate implementing a hierarchical data collection triggering structure in an industrial environment. A data collection template to implement a hierarchical trigger signal architecture may include signal switch configuration and function data that may facilitate a signal switch facility, such as an analog crosspoint switch or multiplexer to output a first input trigger in a hierarchy, and based on the first trigger condition being detected, output a second input trigger in the hierarchy on the same output as the first input trigger by changing an internal mapping of inputs to outputs. Upon detection of the second input trigger condition, the output may be switched to a data signal, such as data from a sensor in an industrial environment.

**[0508]** In embodiments, upon detection of a trigger condition, in addition to switching from the trigger signal to a data signal, an alarm may be generated and optionally propagated to a higher functioning device/module. In addition to switching to a data signal, upon detection of a state of the trigger, sensors that otherwise may be disabled or powered down may be energized/activated to begin to produce data for the newly selected data signal. Activating might alternatively include sending a reset or refresh signal to the sensor(s).

**[0509]** In embodiments, a system for data collection in an industrial environment may include a system for routing a trigger signal onto a data signal path in association with a gearbox of an industrial vehicle. Combining a trigger signal onto a signal path that is also used for a data signal may be useful in gearbox applications by reducing the number of signal lines that need to be routed, while enabling advanced

functions, such as data collection based on pressure changes in the hydraulic fluid and the like. As an example, a sensor may be configured to detect a pressure difference in the hydraulic fluid that exceeds a certain threshold as may occur when the hydraulic fluid flow is directed back into the impeller to give higher torque at low speeds. The output of such a sensor may be configured as a trigger for collecting data about the gearbox when operating at low speeds. In an example, a data collection system for an industrial environment may have a multiplexer or switch that facilitates routing either a trigger or a data channel over a single signal path. Detecting the trigger signal from the pressure sensor may result in a different signal being routed through the same line that the trigger signal was routed by switching a set of controls. A multiplexer may, for example, output the trigger signal until the trigger signal is detected as indicating that the output should be changed to the data signal. As a result of detecting the high-pressure condition, a data collection activity may be activated so that data can be collected using the same line that was recently used by the trigger signal.

**[0510]** In embodiments, a system for data collection in an industrial environment may include a system for routing a trigger signal onto a data signal path in association with a vehicle suspension for truck and car operation. Vehicle suspension, particularly active suspension may include sensors for detecting road events, suspension conditions, and vehicle data, such as speed, steering, and the like. These conditions may not always need to be detected, except, for example, upon detection of a trigger condition. Therefore, combining the trigger condition signal and at least one data signal on a single physical signal routing path could be implemented. Doing so may reduce costs due to fewer physical connections required in such a data collection system. In an example, a sensor may be configured to detect a condition, such as a pot hole, to which the suspension must react. Data from the suspension may be routed along the same signal routing path as this road condition trigger signal so that upon detection of the pot hole, data may be collected that may facilitate determining aspects of the suspension's reaction to the pot hole.

**[0511]** In embodiments, a system for data collection in an industrial environment may include a system for routing a trigger signal onto a data signal path in association with a turbine for power generation in a power station. A turbine used for power generation may be retrofitted with a data collection system that optimizes existing data signal lines to implement greater data collection functions. One such approach involves routing new sources of data over existing lines. While multiplexing signals generally satisfies this need, combining a trigger signal with a data signal via a multiplexer or the like can further improve data collection. In an example, a first sensor may include a thermal threshold sensor that may measure the temperature of an aspect of a power generation turbine. Upon detection of that trigger (e.g., by the temperature rising above the thermal threshold), a data collection system controller may send a different data collection signal over the same line that was used to detect the trigger condition. This may be accomplished by a controller or the like sensing the trigger signal change condition and then signaling to the multiplexer to switch from the trigger signal to a data signal to be output on the same line as the trigger signal for data collection. In this example, when a turbine is detected as having a portion that exceeds its safe thermal threshold, a secondary safety signal may be routed over the trigger signal path and monitored for additional safety conditions, such as overheating and the like.

**[0512]** Referring to FIG. **46**, an embodiment of routing a trigger signal over a data signal path in a data collection system in an industrial environment is depicted. Signal multiplexer **7400** may receive a trigger signal on a first input from a sensor or other trigger source **7404** and a data signal on a second input from a sensor for detecting a temperature associated with an industrial machine in the environment **7402**. The multiplexer **7400** may be configured to output the trigger signal onto an output signal path **7406**. A data collection module **7410** may process the signal on the data path **7406** looking for a change in the signal indicative of a trigger condition provided from the trigger sensor **7404** through the multiplexer **7400**. Upon detection, a control output **7408** may be changed and thereby control the multiplexer **7400** to start outputting data from the temperature probe **7402** by switching an internal switch or the like that may control one or more of the inputs that may be routed to the output **7406**. Data collection facility **7410** may activate a data collection template in response to the detected trigger that may include switching the multiplexer and collecting data into triggered data storage **7412**. Upon completion of the data collection activity, multiplexer control signal **7408** may revert to its initial condition so that trigger sensor **7404** may be monitored again.

**[0513]** An example system for data collection in an industrial environment includes an analog switch that directs a first input to an output of the analog switch until such time as the output of the analog switch indicates that a second input should be directed to the output of the analog switch. In certain further embodiments, the example system includes: where the output of the analog switch indicated that the second input should be directed to the output based on the output transitioning from a pending condition to a triggered condition; wherein the triggered condition includes detecting the output presenting a voltage above a trigger voltage value; routing a number of signals with the analog switch from inputs on the analog switch to outputs on the analog switch in response to the output of the analog switch indicating that the second input should be directed to the output; sampling the output of the analog switch at a rate that exceeds a rate of transition for a number of signals input to the analog switch; and/or generating an alarm signal when the output of the analog switch indicates that a second input should be directed to the output of the analog switch.

**[0514]** An example system for data collection in an industrial environment includes an analog switch that switches between a first input and a second input based on a condition of the first input. In certain further embodiments, the condition of the first input comprises the first input presenting a triggered condition, and/or the triggered condition includes detecting the first input presenting a voltage above a trigger voltage value. In certain embodiments, the analog switch includes routing a plurality of signals with the analog from inputs on the analog switch to outputs on the analog switch based on the condition of the first input, sampling an input of the analog switch at a rate that exceeds a rate of transition for a plurality of signals input to the analog switch, and/or generating an alarm signal based on the condition of the first input.

**[0515]** An example system for data collection in an industrial environment includes a trigger signal and at least one data signal that share a common output of a signal multiplexer, and upon detection of a predefined state of the trigger signal, the common output is configured to propagate the at least one data signal through the signal multiplexer. In certain further embodiments, the signal multiplexer is an analog multiplexer, the predefined state of the trigger signal is detected on the common output, detection of the predefined state of the trigger signal includes detecting the common output presenting a voltage above a trigger voltage value, the multiplexer includes routing a plurality of signals with the multiplexer from inputs on the multiplexer to outputs on the multiplexer in response to detection of the predefined state of the trigger signal, the multiplexer includes sampling the output of the multiplexer at a rate that exceeds a rate of transition for a plurality of signals input to the multiplexer, the multiplexer includes generating an alarm in response to detection of the predefined state of the trigger signal, and/or the multiplexer includes activating at least one sensor to produce the at least one data signal. Without limitation, example systems include: monitoring a gearbox of an industrial vehicle by directing a trigger signal representing a condition of the gearbox to an output of the analog switch until such time as the output of the analog switch indicates that a second input representing a condition of the gearbox related to the trigger signal should be directed to the output of the analog switch; monitoring a suspension system of an industrial vehicle by directing a trigger signal representing a condition of the suspension to an output of the analog switch until such time as the output of the analog switch indicates that a second input representing a condition of the suspension related to the trigger signal should be directed to the output of the analog switch; and/or monitoring a power generation turbine by directing a trigger signal representing a condition of the power generation turbine to an output of the analog switch until such time as the output of the analog switch indicates that a second input representing a condition of the power generation turbine related to the trigger signal should be directed to the output of the analog switch.

**[0516]** In embodiments, a system for data collection in an industrial environment may include a data collection system that monitors at least one signal for a set of collection band parameters and upon detection of a parameter from the set of collection band parameters in the signal, configures collection of data from a set of sensors based on the detected parameter. The set of selected sensors, the signal, and the set of collection band parameters may be part of a smart bands data collection template that may be used by the system when collecting data in an industrial environment. A motivation for preparing a smart-bands data collection template may include monitoring a set of conditions of an industrial machine to facilitate improved operation, reduce down time, preventive maintenance, failure prevention, and the like. Based on analysis of data about the industrial machine, such as those conditions that may be detected by the set of sensors, an action may be taken, such as notifying a user of a change in the condition, adjusting operating parameters, scheduling preventive maintenance, triggering data collection from additional sets of sensors, and the like. An example of data that may indicate a need for some action may include changes that may be detectable through trends present in the data from the set of sensors. Another example is trends of analysis values derived from the set of sensors.

**[0517]** In embodiments, the set of collection band parameters may include values received from a sensor that is configured to sense a condition of the industrial machine (e.g., bearing vibration). However, a set of collection band parameters may instead be a trend of data received from the sensor (e.g., a trend of bearing vibration across a plurality of vibration measurements by a bearing vibration sensor). In embodiments, a set of collection band parameters may be a composite of data and/or trends of data from a plurality of sensors (e.g., a trend of data from on-axis and off-axis vibration sensors). In embodiments, when a data value derived from one or more sensors as described herein is sufficiently close to a value of data in the set of collection band parameters, the data collection activity from the set of sensors may be triggered. Alternatively, a data collection activity from the set of sensors may be triggered when a data value derived from the one or more sensors (e.g., trends and the like) falls outside of a set of collection band parameters. In an example, a set of data collection band parameters for a motor may be a range of rotational speeds from 95% to 105% of a select operational rotational speed. So long as a trend of rotational speed of the motor stays within this range, a data collection activity may be deferred. However, when the trend reaches or exceeds this range, then a data collection activity, such as one defined by a smart bands data collection template may be triggered.

**[0518]** In embodiments, triggering a data collection activity, such as one defined by a smart bands data collection template, may result in a change to a data collection system for an industrial environment that may impact aspects of the system such as data sensing, switching, routing, storage allocation, storage configuration, and the like. This change to the data collection system may occur in near real time to the detection of the condition; however, it may be scheduled to occur in the future. It may also be coordinated with other data collection activities so that active data collection activities, such as a data collection activity for a different smart bands data collection template, can complete prior to the system being reconfigured to meet the smart bands data collection template that is triggered by the sensed condition meeting the smart bands data collection trigger.

**[0519]** In embodiments, processing of data from sensors may be cumulative over time, over a set of sensors, across machines in an industrial environment, and the like. While a sensed value of a condition may be sufficient to trigger a smart bands data collection template activity, data may need to be collected and processed over time from a plurality of sensors to generate a data value that may be compared to a set of data collection band parameters for conditionally triggering the data collection activity. Using data from multiple sensors and/or processing data, such as to generate a trend of data values and the like may facilitate preventing inconsequential instances of a sensed data value being outside of an acceptable range from causing unwarranted smart bands data collection activity. In an example, if a vibration from a bearing is detected outside of an acceptable range infrequently, then trending for this value over time may be useful to detect if the frequency is increasing, decreasing, or staying substantially constant or within a range of values. If the frequency of such a value is found to be increasing, then such a trend is indicative of changes occurring in operation of the industrial machine as experi-

enced by the bearing. An acceptable range of values of this trended vibration value may be established as a set of data collection band parameters against which vibration data for the bearing will be monitored. When the trended vibration value is outside of this range of acceptable values, a smart bands data collection activity may be activated.

**[0520]** In embodiments, a system for data collection in an industrial environment that supports smart band data collection templates may be configured with data processing capability at a point of sensing of one or more conditions that may trigger a smart bands data collection template data collection activity, such as: by use of an intelligent sensor that may include data processing capabilities; by use of a programmable logic component that interfaces with a sensor and processes data from the sensor; by use of a computer processor, such as a microprocessor and the like disposed proximal to the sensor; and the like. In embodiments, processing of data collected from one or more sensors for detecting a smart bands template data collection activity may be performed by remote processors, servers, and the like that may have access to data from a plurality of sensors, sensor modules, industrial machines, industrial environments, and the like.

**[0521]** In embodiments, a system for data collection in an industrial environment may include a data collection system that monitors an industrial environment for a set of parameters, and upon detection of at least one parameter, configures the collection of data from a set of sensors and causes a data storage controller to adapt a configuration of data storage facilities to support collection of data from the set of sensors based on the detected parameter. The methods and systems described herein for conditionally changing a configuration of a data collection system in an industrial environment to implement a smart bands data collection template may further include changes to data storage architectures. As an example, a data storage facility may be disposed on a data collection module that may include one or more sensors for monitoring conditions in an industrial environment. This local data storage facility may typically be configured for rapid movement of sensed data from the module to a next level sensing or processing module or server. When a smart bands data collection condition is detected, sensor data from a plurality of sensors may need to be captured concurrently. To accommodate this concurrent collection, the local memory may be reconfigured to capture data from each of the plurality of sensors in a coordinated manner, such as repeatedly sampling each of the sensors synchronously, or with a known offset, and the like, to build up a set of sensed data that may be much larger than would typically be captured and moved through the local memory. A storage control facility for controlling the local storage may monitor the movement of sensor data into and out of the local data storage, thereby ensuring safe movement of data from the plurality of sensors to the local data storage and on to a destination, such as a server, networked storage facility, and the like. The local data storage facility may be configured so that data from the set of sensors associated with a smart bands data collection template are securely stored and readily accessible as a set of smart band data to facilitate processing the smart band-specific data. As an example, local storage may comprise non-volatile memory (NVM). To prepare for data collection in response to a smart band data collection template being triggered, portions of the NVM may be erased to prepare the NVM to receive data as indicated in the template.

**[0522]** In embodiments, multiple sensors may be arranged into a set of sensors for condition-specific monitoring. Each set, which may be a logical set of sensors, may be selected to provide information about elements in an industrial environment that may provide insight into potential problems, root causes of problems, and the like. Each set may be associated with a condition that may be monitored for compliance with an acceptable range of values. The set of sensors may be based on a machine architecture, hierarchy of components, or a hierarchy of data that contributes to a finding about a machine that may usefully be applied to maintaining or improving performance in the industrial environment. Smart band sensor sets may be configured based on expert system analysis of complex conditions, such as machine failures and the like. Smart band sensor sets may be arranged to facilitate knowledge gathering independent of a particular failure mode or history. Smart band sensor sets may be arranged to test a suggested smart band data collection template prior to implementing it as part of an industrial machine operations program. Gathering and processing data from sets of sensors may facilitate determining which sensors contribute meaningful data to the set, and those sensors that do not contribute can be removed from the set. Smart band sensor sets may be adjusted based on external data, such as industry studies that indicate the types of sensor data that is most helpful to reduce failures in an industrial environment.

**[0523]** In embodiments, a system for data collection in an industrial environment may include a data collection system that monitors at least one signal for compliance to a set of collection band conditions and upon detection of a lack of compliance, configures the collection of data from a predetermined set of sensors associated with the monitored signal. Upon detection of a lack of compliance, a collection band template associated with the monitored signal may be accessed, and resources identified in the template may be configured to perform the data collection. In embodiments, the template may identify sensors to activate, data from the sensors to collect, duration of collection or quantity of data to be collected, destination (e.g., memory structure) to store the collected data, and the like. In embodiments, a smart band method for data collection in an industrial environment may include periodic collection of data from one or more sensors configured to sense a condition of an industrial machine in the environment. The collected data may be checked against a set of criteria that define an acceptable range of the condition. Upon validation that the collected data is either approaching one end of the acceptable limit or is beyond the acceptable range of the condition, data collection may commence from a smart-band group of sensors associated with the sensed condition based on a smart-band collection protocol configured as a data collection template. In embodiments, an acceptable range of the condition is based on a history of applied analytics of the condition. In embodiments, upon validation of the acceptable range being exceeded, data storage resources of a module in which the sensed condition is detected may be configured to facilitate capturing data from the smart band group of sensors.

**[0524]** In embodiments, monitoring a condition to trigger a smart band data collection template data collection action may be: in response to: a regulation, such as a safety

regulation; in response to an upcoming activity, such as a portion of the industrial environment being shut down for preventive maintenance; in response to sensor data missing from routine data collection activities; and the like. In embodiments, in response to a faulty sensor or sensor data missing from a smart band template data collection activity, one or more alternate sensors may be temporarily included in the set of sensors so as to provide data that may effectively substitute for the missing data in data processing algorithms.

**[0525]** In embodiments, smart band data collection templates may be configured for detecting and gathering data for smart band analysis covering vibration spectra, such as vibration envelope and current signature for spectral regions or peaks that may be combinations of absolute frequency or factors of machine related parameters, vibration time waveforms for time-domain derived calculations including, without limitation: RMS overall, peak overall, true peak, crest factor, and the like; vibration vectors, spectral energy humps in various regions (e.g., low-frequency region, high frequency region, low orders, and the like); pressure-volume analysis and the like.

**[0526]** In embodiments, a system for data collection that applies smart band data collection templates may be applied to an industrial environment, such as ball screw actuators in an automated production environment. Smart band analysis may be applied to ball screw actuators in industrial environments such as precision manufacturing or positioning applications (e.g., semiconductor photolithography machines, and the like). As a typical primary objective of using a ball screw is for precise positioning, detection of variation in the positioning mechanism can help avoid costly defective production runs. Smart bands triggering and data collection may help in such applications by detecting, through smart band analysis, potential variations in the positioning mechanism such as in the ball screw mechanism, a worm drive, a linear motor, and the like. In an example, data related to a ball screw positioning system may be collected with a system for data collection in an industrial environment as described herein. A plurality of sensors may be configured to collect data such as screw torque, screw direction, screw speed, screw step, screw home detection, and the like. Some portion of this data may be processed by a smart bands data analysis facility to determine if variances, such as trends in screw speed as a function of torque, approach or exceed an acceptable threshold. Upon such a determination, a data collection template for the ball screw production system may be activated to configure the data sensing, routing, and collection resources of the data collection system to perform data collection to facilitate further analysis. The smart band data collection template facilitates rapid collection of data from other sensors than screw speed and torque, such as position, direction, acceleration, and the like by routing data from corresponding sensors over one or more signal paths to a data collector. The duration and order of collection of the data from these sources may be specified in the smart bands data collection template so that data required for further analysis is effectively captured.

**[0527]** In embodiments, a system for data collection that applies smart band data collection templates to configure and utilize data collection and routing infrastructure may be applied to ventilation systems in mining environments. Ventilation provides a crucial role in mining safety. Early detection of potential problems with ventilation equipment can be aided by applying a smart bands approach to data collection in such an environment. Sensors may be disposed for collecting information about ventilation operation, quality, and performance throughout a mining operation. At each ventilation device, ventilation-related elements, such as fans, motors, belts, filters, temperature gauges, voltage, current, air quality, poison detection, and the like may be configured with a corresponding sensor. While variation in any one element (e.g., air volume per minute, and the like) may not be indicative of a problem, smart band analysis may be applied to detect trends over time that may be suggestive of potential problems with ventilation equipment. To perform smart bands analysis, data from a plurality of sensors may be required to form a basis for analysis. By implementing data collection systems for ventilation stations, data from a ventilation system may be captured. In an example, a smart band analysis may be indicated for a ventilation station. In response to this indication, a data collection system may be configured to collect data by routing data from sensors disposed at the ventilation station to a central monitoring facility that may gather and analyze data from several ventilation stations.

**[0528]** In embodiments, a system for data collection that applies smart band data collection templates to configure and utilize data collection and routing infrastructure may be applied to drivetrain data collection and analysis in mining environments. A drivetrain, such as a drivetrain for a mining vehicle, may include a range of elements that could benefit from use of the methods and systems of data collection in an industrial environment as described herein. In particular, smart band-based data collection may be used to collect data from heavy duty mining vehicle drivetrains under certain conditions that may be detectable by smart bands analysis. A smart bands-based data collection template may be used by a drivetrain data collection and routing system to configure sensors, data paths, and data collection resources to perform data collection under certain circumstances, such as those that may indicate an unacceptable trend of drivetrain performance. A data collection system for an industrial drivetrain may include sensing aspects of a non-steering axle, a planetary steering axle, driveshafts, (e.g., main and wing shafts), transmissions, (e.g., standard, torque converters, long drop), and the like. A range of data related to these operational parts may be collected. However, data for support and structural members that support the drivetrain may also need to be collected for thorough smart band analysis. Therefore, collection across this wide range of drivetrain-related components may be triggered based on a smart band analysis determination of a need for this data. In an example, a smart band analysis may indicate potential slippage between a main and wing driveshaft that may represented by an increasing trend in response delay time of the wing drive shaft to main drive shaft operation. In response to this increasing trend, data collection modules disposed throughout the mining vehicle's drive train may be configured to route data from local sensors to be collected and analyzed by data collectors. Mining vehicle drivetrain smart based data collection may include a range of templates based on which type of trend is detected. If a trend related to a steering axle is detected, a data collection template to be implemented may be different in sensor content, duration, and the like than for a trend related to power demand for a normalized payload. Each template could configure data sensing, routing, and collection resources throughout the vehicle drive train accordingly.

**[0529]** Referring to FIG. **47**, a system for data collection in an industrial environment that facilitates data collection for smart band analysis is depicted. A system for data collection in an industrial environment may include a smart band analysis data collection template repository **7600** in which smart band templates **7610** for data collection system configuration and collection of data may be stored and accessed by a data collection controller **7602**. The templates **7610** may include data collection system configuration **7604** and operation information **7606** that may identify sensors, collectors, signal paths, and information for initiation and coordination of collection, and the like. A controller **7602** may receive an indication, such as a command from a smart band analysis facility **7608** to select and implement a specific smart band template **7610**. The controller **7602** may access the template **7610** and configure the data collection system resources based on the information in that template. In embodiments, the template may identify: specific sensors; a multiplexer/switch configuration, data collection trigger/initiation signals and/or conditions, time duration and/or amount of data for collection; destination of collected data; intermediate processing, if any; and any other useful information, (e.g., instance identifier, and the like). The controller **7602** may configure and operate the data collection system to perform the collection for the smart band template and optionally return the system configuration to a previous configuration.

**[0530]** An example system for data collection in an industrial environment includes a data collection system that monitors at least one signal for a set of collection band parameters and, upon detection of a parameter from the set of collection band parameters, configures portions of the system and performs collection of data from a set of sensors based on the detected parameter. In certain further embodiments, the signal includes an output of a sensor that senses a condition in the industrial environment, where the set of collection band parameters comprises values derivable from the signal that are beyond an acceptable range of values derivable from the signal; where the at least one signal includes an output of a sensor that senses a condition in the industrial environment; wherein configuring portions of the system includes configuring a storage facility to accept data collected from the set of sensors; where configuring portions of the system includes configuring a data routing portion includes at least one of: an analog crosspoint switch, a hierarchical multiplexer, an analog-to-digital converter, an intelligent sensor, and/or a programmable logic component; wherein detection of a parameter from the set of collection band parameters comprises detecting a trend value for the signal being beyond an acceptable range of trend values; and/or where configuring portions of the system includes implementing a smart band data collection template associated with the detected parameter. In certain embodiments, a data collection system monitors a signal for data values within a set of acceptable data values that represent acceptable collection band conditions for the signal and, upon detection of a data value for the at least one signal outside of the set of acceptable data values, triggers a data collection activity that causes collecting data from a predetermined set of sensors associated with the monitored signal. In certain further embodiment, a data collection system includes the signal including an output of a sensor that senses a condition in the industrial environment; where the set of acceptable data value includes values derivable from the signal that are within an acceptable range of values derivable from the signal; configuring a storage facility of the system to facilitate collecting data from the predetermined set of sensors in response to the detection of a data value outside of the set of acceptable data values; configuring a data routing portion of the system including an analog crosspoint switch, a hierarchical multiplexer, an analog-to-digital converter, an intelligent sensor, and/or a programmable logic component in response to detecting a data value outside of the set of acceptable data values; where detection of a data value for the signal outside of the set of acceptable data values includes detecting a trend value for the signal being beyond an acceptable range of trend values; and/or where the data collection activity is defined by a smart band data collection template associated with the detected parameter.

**[0531]** An example method for data collection in an industrial environment comprising includes an operation to collect data from sensor(s) configured to sense a condition of an industrial machine in the environment; an operation to check the collected data against a set of criteria that define an acceptable range of the condition; and in response to the collected data violating the acceptable range of the condition, an operation to collect data from a smart-band group of sensors associated with the sensed condition based on a smart-band collection protocol configured as a smart band data collection template. In certain further embodiments, a method includes where violating the acceptable range of the condition includes a trend of the data from the sensor(s) approaching a maximum value of the acceptable range; where the smart-band group of sensors is defined by the smart band data collection template; where the smart band data collection template includes a list of sensors to activate, data from the sensors to collect, duration of collection of data from the sensors, and/or a destination location for storing the collected data; where collecting data from a smart-band group of sensors includes configuring at least one data routing resource of the industrial environment that facilitates routing data from the smart band group of sensors to a plurality of data collectors; and/or where the set of criteria includes a range of trend values derived by processing the data from sensor(s).

**[0532]** Without limitation, an example system monitors a ball screw actuator in an automated production environment, and monitors at least one signal from the ball screw actuator for a set of collection band parameters and, upon detection of a parameter from the set of collection band parameters, configures portions of the system and performs collection of data from a set of sensors disposed to monitor conditions of the ball screw actuator based on the detected parameter; another example system monitors a ventilation system in a mining environment, and monitors at least one signal from the ventilation system for a set of collection band parameters and, upon detection of a parameter from the set of collection band parameters, configures portions of the system and performs collection of data from a set of sensors disposed to monitor conditions of the ventilation system based on the detected parameter; an example system monitors a drivetrain of a mining vehicle, and monitors at least one signal from the drive train for a set of collection band parameters and, upon detection of a parameter from the set of collection band parameters, configures portions of the system and performs collection of data from a set of sensors disposed to monitor conditions of the drivetrain based on the detected parameter.

**[0533]** In embodiments, a system for data collection in an industrial environment may automatically configure local and remote data collection resources and may perform data collection from a plurality of system sensors that are identified as part of a group of sensors that produce data that is required to perform operational deflection shape rendering. In embodiments, the system sensors are distributed throughout structural portions of an industrial machine in the industrial environment. In embodiments, the system sensors sense a range of system conditions including vibration, rotation, balance, friction, and the like. In embodiments, automatically configuring is in response to a condition in the environment being detected outside of an acceptable range of condition values. In embodiments, a sensor in the identified group of system sensors senses the condition.

**[0534]** In embodiments, a system for data collection in an industrial environment may configure a data collection plan, such as a template, to collect data from a plurality of system sensors distributed throughout a machine to facilitate automatically producing an operational deflection shape visualization ("ODSV") based on machine structural information and a data set used to produce an ODSV of the machine.

**[0535]** In embodiments, a system for data collection in an industrial environment may configure a data collection template for collecting data in an industrial environment by identifying sensors disposed for sensing conditions of preselected structural members of an industrial machine in the environment based on an ODSV of the industrial machine. In embodiments, the template may include an order and timing of data collection from the identified sensors.

**[0536]** In embodiments, methods and systems for data collection in an industrial environment may include a method of establishing an acceptable range of sensor values for a plurality of industrial machine condition sensors by validating an operational deflection shape visualization of structural elements of the machine as exhibiting deflection within an acceptable range, wherein data from the plurality of sensors used in the validated ODSV define the acceptable range of sensor values.

**[0537]** In embodiments, a system for data collection in an industrial environment may include a plurality of data sources, such as sensors, that may be grouped for coordinated data collection to provide data required to produce an ODSV. Information regarding the sensors to group, data collection coordination requirements, and the like may be retrieved from an ODSV data collection template. Coordinated data collection may include concurrent data collection. To facilitate concurrent data collection from a portion of the group of sensors, sensor routing resources of the system for data collection may be configured, such as by configuring a data multiplexer to route data from the portion of the group of sensors to which it connects to data collectors. In embodiments, each such source that connects an input of the multiplexer may be routed within the multiplexer to separate outputs so that data from all of the connected sources may be routed on to data collection elements of the industrial environment. In embodiments, the multiplexer may include data storage capabilities that may facilitate sharing a common output for at least a portion of the inputs. In embodiments, a multiplexer may include data storage capabilities and data bus-enabled outputs so that data for each source may be captured in a memory and transmitted over a data bus, such as a data bus that is common to the outputs of the multiplexer. In embodiments, sensors may be smart sensors that may include data storage capabilities and may send data from the data storage to the multiplexer in a coordinated manner that supports use of a common output of the multiplexer and/or use of a common data bus.

**[0538]** In embodiments, a system for data collection in an industrial environment may comprise templates for configuring the data collection system to collect data from a plurality of sensors to perform ODSV for a plurality of deflection shapes. Individual templates may be configured for visualization of looseness, soft joints, bending, twisting, and the like. Individual deflection shape data collection templates may be configured for different portions of a machine in an industrial environment.

**[0539]** In embodiments, a system for data collection in an industrial environment may facilitate operational deflection shape visualization that may include visualization of locations of sensors that contributed data to the visualization. In the visualization, each sensor that contributed data to generate the visualization may be indicated by a visual element. The visual element may facilitate user access to information about the sensor, such as location, type, representative data contributed, path of data from the sensor to a data collector, a deflection shape template identifier, a configuration of a switch or multiplexer through which the data is routed, and the like. The visual element may be determined by associating sensor identification information received from a sensor with information, such as a sensor map, that correlates sensor identification information with physical location in the environment. The information may appear in the visualization in response to the visual element representing the sensor being selected, such as by a user positioning a cursor on the sensor visual element.

**[0540]** In embodiments, ODSV may benefit from data satisfying a phase relationship requirement. A data collection system in the environment may be configured to facilitate collecting data that complies with the phase relationship requirement. Alternatively, the data collection system may be configured to collect data from a plurality of sensors that contains data that satisfies the phase relationship requirements but may also include data that does not. A post processing operation that may access phase detection data may select a subset of the collected data.

**[0541]** In embodiments, a system for data collection in an industrial environment may include a multiplexer receiving data from a plurality of sensors and multiplexing the received data for delivery to a data collector. The data collector may process the data to facilitate ODSV. ODSV may require data from several different sensors, and may benefit from using a reference signal, such as data from a sensor, when processing data from the different sensors. The multiplexer may be configured to provide data from the different sensors, such as by switching among its inputs over time so that data from each sensor may be received by the data collector. However, the multiplexer may include a plurality of outputs so that at least a portion of the inputs may be routed to least two of the plurality of outputs. Therefore, in embodiments, a multiple output multiplexer may be configured to facilitate data collection that may be suitable for ODSV by routing a reference signal from one of its inputs (e.g., data from an accelerometer) to one of its outputs and multiplexing data from a plurality of its outputs onto one or more of its outputs while maintaining the reference signal output routing. A data collector may collect

the data from the reference output and use that to align the multiplexed data from the other sensors.

**[0542]** In embodiments, a system for data collection in an industrial environment may facilitate ODSV through coordinated data collection related to conveyors for mining applications. Mining operations may rely on conveyor systems to move material, supplies, and equipment into and out of a mine. Mining operations may typically operate around the clock; therefore, conveyor downtime may have a substantive impact on productivity and costs. Advanced analysis of conveyor and related systems that focuses on secondary affects that may be challenging to detect merely through point observation may be more readily detected via ODSV. Capturing operational data related to vibration, stresses, and the like can facilitate ODSV. However, coordination of data capture provides more reliable results. Therefore, a data collection system that may have sensors dispersed throughout a conveyor system can be configured to facilitate such coordinated data collection. In an example, capture of data affecting structural components of a conveyor, such as; landing points and the horizontal members that connect them and support the conveyer between landing points; conveyer segment handoff points; motor mounts; mounts of conveyer rollers and the like may need to be coordinated with data related to conveyor dynamic loading, drive systems, motors, gates, and the like. A system for data collection in an industrial environment, such as a mining environment may include data sensing and collection modules placed throughout the conveyor at locations such as segment handoff points, drive systems, and the like. Each module may be configured by one or more controllers, such as programmable logic controllers, that may be connected through a physical or logical (e.g., wireless) communication bus that aids in performing coordinated data collection. To facilitate coordination, a reference signal, such as a trigger and the like, may be communicated among the modules for use when collecting data. In embodiments, data collection and storage may be performed at each module so as to reduce the need for real-time transfer of sensed data throughout the mining environment. Transfer of data from the modules to an ODSV processing facility may be performed after collection, or as communication bandwidth between the modules and the processing facility allows. ODSV can provide insight into conditions in the conveyer, such as deflection of structural members that may, over time cause premature failure. Coordinated data collection with a data collection system for use in an industrial environment, such as mining, can enable ODSV that may reduce operating costs by reducing downtime due to unexpected component failure.

**[0543]** In embodiments, a system for data collection in an industrial environment may facilitate operational deflection shape visualization through coordinated data collection related to fans for mining applications. Fans provide a crucial function in mining operations of moving air throughout a mine to provide ventilation, equipment cooling, combustion exhaust evacuation, and the like. Ensuring reliable and often continuous operation of fans may be critical for miner safety and cost-effective operations. Dozens or hundreds of fans may be used in large mining operations. Fans, such as fans for ventilation management may include circuit, booster, and auxiliary types. High capacity auxiliary fans may operate at high speeds, over 2500 RPMs. Performing ODSV may reveal important reliability information about fans deployed in a mining environment. Collecting the range of data needed for ODSV of mining fans may be performed by a system for collecting data in industrial environments as described herein. In embodiments, sensing elements, such as intelligent sensing and data collection modules may be deployed with fans and/or fan subsystems. These modules may exchange collection control information (e.g., over a dedicated control bus and the like) so that data collection may be coordinated in time and phase to facilitate ODSV.

**[0544]** A large auxiliary fan for use in mining may be constructed for transportability into and through the mine and therefore may include a fan body, intake and outlet ports, dilution valves, protection cage, electrical enclosure, wheels, access panels, and other structural and/or operational elements. The ODSV of such an auxiliary fan may require collection of data from many different elements. A system for data collection may be configured to sense and collect data that may be combined with structural engineering data to facilitate ODSV for this type of industrial fan.

**[0545]** Referring to FIG. **48**, an embodiment of a system for data collection in an industrial environment that performs coordinated data collection suitable for ODSV is depicted. A system for data collection in an industrial environment may include a ODSV data collection template repository **7800** in which ODSV templates **7810** for data collection system configuration and collection of data may be stored and accessed by a system for data collection controller **7802**. The templates **7810** may include data collection system configuration **7804** and operation information **7806** that may identify sensors, collectors, signal paths, reference signal information, information for initiation and coordination of collection, and the like. A controller **7802** may receive an indication, such as a command from a ODSV analysis facility **7808** to select and implement a specific ODSV template **7810**. The controller **7802** may access the template **7810** and configure the data collection system resources based on the information in that template. In embodiments, the template may identify specific sensors, multiplexer/switch configuration, reference signals for coordinating data collection, data collection trigger/initiation signals and/or conditions, time duration, and/or amount of data for collection, destination of collected data, intermediate processing, if any, and any other useful information (e.g., instance identifier, and the like). The controller **7802** may configure and operate the data collection system to perform the collection for the ODSV template and optionally return the system configuration to a previous configuration.

**[0546]** An example method of data collection for performing ODSV in an industrial environment includes automatically configuring local and remote data collection resources and collecting data from a number of sensors using the configured resources, where the number of sensors include a group of sensors that produce data that is required to perform the ODSV. In certain further embodiments, an example method further includes where the sensors are distributed throughout structural portions of an industrial machine in the industrial environment; where the sensors sense a range of system conditions including vibration, rotation, balance, and/or friction; where the automatically configuring is in response to a condition in the environment being detected outside of an acceptable range of condition values; where the condition is sensed by a sensor in a group of system sensors; where automatically configuring includes configuring a signal switching resource to concurrently

connect a portion of the group of sensors to data collection resources; and/or where the signal switching resource is configured to maintain a connection between a reference sensor and the data collection resources throughout a period of collecting data from the sensors to perform ODSV.

**[0547]** An example method of data collection in an industrial environment includes configuring a data collection plan to collect data from a number of system sensors distributed throughout a machine in the industrial environment, the plan based on machine structural information and an indication of data needed to produce an ODSV of the machine; configuring data sensing, routing and collection resources in the environment based on the data collection plan; and collecting data based on the data collection plan. In certain further embodiments, an example method further includes: producing the ODSV; where the configuring data sensing, routing, and collection resources is in response to a condition in the environment being detected outside of an acceptable range of condition values; where the condition is sensed by a sensor identified in the data collection plan; where configuring resources includes configuring a signal switching resource to concurrently connect the plurality of system sensors to data collection resources; and/or where the signal switching resource is configured to maintain a connection between a reference sensor and the data collection resources throughout a period of collecting data from the sensors to perform ODSV.

**[0548]** An example system for data collection in an industrial environment includes: a number of sensors disposed throughout the environment; multiplexer that connects signals from the plurality of sensors to data collection resources; and a processor for processing data collected from the number of sensors in response to the data collection template, where the processing results in an ODSV of a portion of a machine disposed in the environment. In certain further embodiments, an example system includes: where the ODSV collection template further identifies a condition in the environment on which performing data collection from the identified sensors is dependent; where the condition is sensed by a sensor identified in the ODSV data collection template; where the data collection template specified inputs of the multiplexer to concurrently connect to data collection resources; where the multiplexer is configured to maintain a connection between a reference sensor and the data collection resources throughout a period of collecting data from the sensors to perform ODSV; where the ODSV data collection template specifies data collection requirements for performing ODSV for looseness, soft joints, bending, and/or twisting of a portion of a machine in the industrial environment; and/or where the ODSV collection template specifies an order and timing of data collection from a plurality of identified sensors.

**[0549]** An example method of monitoring a mining conveyer for performing ODSV of the conveyer includes automatically configuring local and remote data collection resources and collecting data from a number of sensors disposed to sense the mining conveyor using the configured resources, wherein the plurality of sensors comprise a group of sensors that produce data that is required to perform the operational deflection shape visualization of a portion of the conveyor. An example method of monitoring a mining fan for performing ODSV of the fan includes automatically configuring local and remote data collection resources collecting data from a number of sensors disposed to sense the fan using the configured resources, and where the number of sensors include a group of sensors that produce data that is sufficient or required to perform ODSV of a portion of the fan.

**[0550]** In embodiments, a system for data collection in an industrial environment may include a hierarchical multiplexer that facilitates successive multiplexing of input data channels according to a configurable hierarchy, such as a user configurable hierarchy. The system for data collection in an industrial environment may include the hierarchical multiplexer that facilitates successive multiplexing of a plurality of input data channels according to a configurable hierarchy. The hierarchy may be automatically configured by a controller based on an operational parameter in the industrial environment, such as a parameter of a machine in the industrial environment.

**[0551]** In embodiments, a system for data collection in an industrial environment may include a plurality of sensors that may output data at different rates. The system may also include a multiplexer module that receives sensor outputs from a first portion of the plurality of sensors with similar output rates into separate inputs of a first hierarchical multiplexer of the multiplexer module. The first hierarchical multiplexer of the multiplexer module may provide at least one multiplexed output of a portion of its inputs to a second hierarchical multiplexer that receives sensor outputs from a second portion of the plurality of sensors with similar output rates and that provides at least one multiplexed output of a portion of its inputs. In embodiments, the output rates of the first set of sensors may be slower than the output rates of the second set of sensors. In embodiments, data collection rate requirements of the first set of sensors may be lower than the data collection rate requirements of the second set of sensors. In embodiments, the first hierarchical multiplexer output is a time-multiplexed combination of a portion of its inputs. In embodiments, the second hierarchical multiplexer receives sensor signals with output rates that are similar to a rate of output of the first multiplexer, wherein the first multiplexer produces time-based multiplexing of the portion of its plurality of inputs.

**[0552]** In embodiments, a system for data collection in an industrial environment may include a hierarchical multiplexer that is dynamically configured based on a data acquisition template. The hierarchical multiplexer may include a plurality of inputs and a plurality of outputs, wherein any input can be directed to any output in response to sensor output collection requirements of the template, and wherein a subset of the inputs can be multiplexed at a first switching rate and output to at least one of the plurality of outputs.

**[0553]** In embodiments, a system for data collection in an industrial environment may include a plurality of sensors for sensing conditions of a machine in the environment, a hierarchical multiplexer, a plurality of analog-to-digital converters (ADCs), a processor, local storage, and an external interface. The system may use the processor to access a data acquisition template of parameters for data collection from a portion of the plurality of sensors, configure the hierarchical multiplexer, the ADCs and the local storage to facilitate data collection based on the defined parameters, and execute the data collection with the configured elements including storing a set of data collected from a portion of the plurality of sensors into the local storage. In embodiments, the ADCs convert analog sensor data into a digital form that

is compatible with the hierarchical multiplexer. In embodiments, the processor monitors at least one signal generated by the sensors for a trigger condition and, upon detection of the trigger condition, responds by at least one of communicating an alert over the external interface and performing data acquisition according to a template that corresponds to the trigger condition.

**[0554]** In embodiments, a system for data collection in an industrial environment may include a hierarchical multiplexer that may be configurable based on a data collection template of the environment. The multiplexer may support receiving a large number of data signals (e.g., from sensors in the environment) simultaneously. In embodiments, all sensors for a portion of an industrial machine in the environment may be individually connected to inputs of a first stage of the multiplexer. The first stage of the multiplexer may provide a plurality of outputs that may feed into a second multiplexer stage. The second stage multiplexer may provide multiple outputs that feed into a third stage, and so on. Data collection templates for the environment may be configured for certain data collection sets, such as a set to determine temperature throughout a machine or a set to determine vibration throughout a machine, and the like. Each template may identify a plurality of sensors in the environment from which data is to be collected, such as during a data collection event. When a template is presented to the hierarchical multiplexer, mapping of inputs to outputs for each multiplexing stage may be configured so that the required data is available at output(s) of a final multiplexing hierarchical stage for data collection. In an example, a data collection template to collect a set of data to determine temperature throughout a machine in the environment may identify many temperature sensors. The first stage multiplexer may respond to the template by selecting all of the available inputs that connect to temperature sensors. The data from these sensors may be multiplexed onto multiple inputs of a second stage sensor that may perform time-based multiplexing to produce a time-multiplexed output(s) of temperature data from a portion of the sensors. These outputs may be gathered by a data collector and de-multiplexed into individual sensor temperature readings.

**[0555]** In embodiments, time-sensitive signals, such as triggers and the like, may connect to inputs that directly connect to a final multiplexer stage, thereby reducing any potential delay caused by routing through multiple multiplexing stages.

**[0556]** In embodiments, a hierarchical multiplexer in a system for data collection in an industrial environment may comprise an array of relays, a programmable logic component, such as a CPLD, a field programmable gate array (FPGA), and the like.

**[0557]** In embodiments, a system for data collection in an industrial environment that may include a hierarchical multiplexer for routing sensor outputs onto signal paths may be used with explosive systems in mining applications. Blast initiating and electronic blasting systems may be configured to provide computer assisted blasting systems. Ensuring that blasting occurs safely may involve effective sensing and analysis of a range of conditions. A system for data collection in an industrial environment may be deployed to sense and collect data associated with explosive systems, such as explosive systems used for mining A data collection system can use a hierarchical multiplexer to capture data from explosive system installations automatically by aligning, for example, a deployment of the explosive system including its layout plans, integration, interconnectivity, cascading plan, and the like with the hierarchical multiplexer. An explosive system may be deployed with a form of hierarchy that starts with a primary initiator and follows detonation connections through successive layers of electronic blast control to sequenced detonation. Data collected from each of these layers of blast systems configuration may be associated with stages of a hierarchical multiplexer so that data collected from bulk explosive detonation can be captured in a hierarchy that corresponds to its blast control hierarchy.

**[0558]** In embodiments, a system for data collection in an industrial environment that may include a hierarchical multiplexer for routing sensor outputs onto signal paths may be used with refinery blowers in oil and gas pipeline applications. Refinery blower applications include fired heater combustion air preheat systems and the like. Forced draft blowers may include a range of moving and moveable parts that may benefit from condition sensing and monitoring. Sensing may include detecting conditions of: couplings (e.g., temperature, rotational rate, and the like); motors (vibration, temperature, RPMs, torque, power usage, and the like); louver mechanics (actuators, louvers, and the like); and plenums (flow rate, blockage, back pressure, and the like). A system for data collection in an industrial environment that uses a hierarchical multiplexer for routing signals from sensors and the like to data collectors may be configured to collect data from a refinery blower. In an example, a plurality of sensors may be deployed to sense air flow into, throughout, and out of a forced draft blower used in a refinery application, such as to preheat combustion air. Sensors may be grouped based on a frequency of a signal produced by sensors. Sensors that detect louver position and control may produce data at a lower rate than sensors that detect blower RPMs. Therefore, louver position and control sensor signals can be applied to a lower stage in a multiplexer hierarchy than the blower RPM sensors because data from louvers change less often than data from RPM sensors. A data collection system could switch among a plurality of louver sensors and still capture enough information to properly detect louver position. However, properly detecting blower RPM data may require greater bandwidth of connection between the blower RPM sensor and a data collector. A hierarchical multiplexer may enable capturing blower RPM data at a rate that is required for proper detection (perhaps by outputting the RPM sensor data for long durations of time), while switching among several louver sensor inputs and directing them onto (or through) an output that is different than the blower RPM output. Alternatively, the louver inputs may be time-multiplexed with the blower RPM data onto a single output that can be de-multiplexed by a data collector that is configured to determine when blower RPM data is being output and when louver position data is being output.

**[0559]** In embodiments, a system for data collection in an industrial environment that may include a hierarchical multiplexer for routing sensor outputs onto signal paths may be used with pipeline-related compressors (e.g., reciprocating) in oil and gas pipeline applications. A typical use of a reciprocating compressor for pipeline application is production of compressed air for pipeline testing. A system for data collection in an industrial environment may apply a hierarchical multiplexer while collecting data from a pipeline testing-based reciprocating compressor. Data from sensors

deployed along a portion of a pipeline being tested may be input to the lowest stage of the hierarchical multiplexer because these sensors may be periodically sampled prior to and during testing. However, the rate of sampling may be low relative to sensors that detect compressor operation, such as parts of the compressor that operate at higher frequencies, such as the reciprocating linkage, motor, and the like. The sensors that provide data at frequencies that enable reproduction of the detected motion may be input to higher stages in the hierarchical multiplexer. Time multiplexing among the pipeline sensors may provide for coverage of a large number of sensors while capturing events such as seal leakage and the like. However, time multiplexing among reciprocating linkage sensors may require output signal bandwidth that may exceed the bandwidth available for routing data from the multiplexer to a data collector. Therefore, in embodiments, a plurality of pipeline sensors may be time-multiplexed onto a single multiplexer output and a compressor sensor detecting rapidly moving parts, such as the compressor motor, may be routed to separate outputs of the multiplexer.

**[0560]** Referring to FIG. **49**, a system for data collection in an industrial environment that uses a hierarchical multiplexer for routing sensor signals to data collectors is depicted. Outputs from a plurality of sensors, such as sensors that monitor conditions that change with relatively low frequency (e.g., blower louver position sensors) may be input to a lowest hierarchical stage **8000** of a hierarchical multiplexer **8002** and routed to successively higher stages in the multiplexer, ultimately being output from the multiplexer, perhaps as a time-multiplexed signal comprising time-specific samples of each of the plurality of low frequency sensors. Outputs from a second plurality of sensors, such as sensors that monitor motor operation that may run at more than 1000 RPMs may be input to a higher hierarchical stage **8004** of the hierarchical multiplexer and routed to outputs that support the required bandwidth.

**[0561]** An example system for data collection in an industrial environment includes a controller for controlling data collection resources in the industrial environment and a hierarchical multiplexer that facilitates successive multiplexing of a number of input data channels according to a configurable hierarchy, wherein the hierarchy is automatically configured by the controller based on an operational parameter of a machine in the industrial environment. In certain further embodiments, an example system includes: where the operational parameter of the machine is identified in a data collection template; where the hierarchy is automatically configured in response to smart band data collection activation further including an analog-to-digital converter disposed between a source of the input data channels and the hierarchical multiplexer; and/or where the operational parameter of the machine comprises a trigger condition of at least one of the data channels. Another example system for data collection in an industrial environment includes a plurality of sensors and a multiplexer module that receives sensor outputs from a first portion of the sensors with similar output rates into separate inputs of a first hierarchical multiplexer that provides at least one multiplexed output of a portion of its inputs to a second hierarchical multiplexer, the second hierarchical multiplexer receiving sensor outputs from a second portion of the sensors and providing at least one multiplexed output of a portion of its inputs. In certain further embodiments, an example system includes: where the second portion of the sensors output data at rates that are higher than the output rates of the first portion of the sensors; where the first portion and the second portion of the sensors output data at different rates; where the first hierarchical multiplexer output is a time-multiplexed combination of a portion of its inputs; where the second multiplexer receives sensor signals with output rates that are similar to a rate of output of the first multiplexer; and/or where the first multiplexer produces time-based multiplexing of the portion of its inputs.

**[0562]** An example system for data collection in an industrial environment includes a number of sensors for sensing conditions of a machine in the environment a hierarchical multiplexer, a number of analog-to-digital converters, a controller, local storage, an external interface, where the system includes using the controller to access a data acquisition template that defines parameters for data collection from a portion of the sensors, to configure the hierarchical multiplexer, the ADCs, and the local storage to facilitate data collection based on the defined parameters, and to execute the data collection with the configured elements including storing a set of data collected from a portion of the sensors into the local storage. In certain further embodiments, an example system includes: where the ADCs convert analog sensor data into a digital form that is compatible with the hierarchical multiplexer; where the processor monitors at least one signal generated by the sensors for a trigger condition and, upon detection of the trigger condition, responds by communicating an alert over the external interface and/or performing data acquisition according to a template that corresponds to the trigger condition; where the hierarchical multiplexer performs successive multiplexing of data received from the sensors according to a configurable hierarchy; where the hierarchy is automatically configured by the controller based on an operational parameter of a machine in the industrial environment; where the operational parameter of the machine is identified in a data collection template; where the hierarchy is automatically configured in response to smart band data collection activation; the system further including an ADC disposed between a source of the input data channels and the hierarchical multiplexer; where the operational parameter of the machine includes a trigger condition of at least one of the data channels; where the hierarchical multiplexer performs successive multiplexing of data received from the plurality of sensors according to a configurable hierarchy; and/or where the hierarchy is automatically configured by a controller based on a detected parameter of an industrial environment. Without limitation, n example system is configured for monitoring a mining explosive system, and includes a controller for controlling data collection resources associated with the explosive system, and a hierarchical multiplexer that facilitates successive multiplexing of a number of input data channels according to a configurable hierarchy, where the hierarchy is automatically configured by the controller based on a configuration of the explosive system. Without limitation, an example system is configured for monitoring a refinery blower in an oil and gas pipeline applications, and includes a controller for controlling data collection resources associated with the refinery blower, and a hierarchical multiplexer that facilitates successive multiplexing of a number of input data channels according to a configurable hierarchy, where the hierarchy is automatically configured by the controller based on a configuration of the

refinery blower. Without limitation, an example system is configured for monitoring a reciprocating compressor in an oil and gas pipeline applications comprising, and includes controller for controlling data collection resources associated with the reciprocating compressor, and a hierarchical multiplexer that facilitates successive multiplexing of a number of input data channels according to a configurable hierarchy, where the hierarchy is automatically configured by the controller based on a configuration of the reciprocating compressor.

**[0563]** In embodiments, a system for data collection in an industrial environment may include an ultrasonic sensor disposed to capture ultrasonic conditions of an element of in the environment. The system may be configured to collect data representing the captured ultrasonic condition in a computer memory, on which a processor may execute an ultrasonic analysis algorithm. In embodiments, the sensed element may be one of a moving element, a rotating element, a structural element, and the like. In embodiments, the data may be streamed to the computer memory. In embodiments, the data may be continuously streamed. In embodiments, the data may be streamed for a duration of time, such as an ultrasonic condition sampling duration. In embodiments, the system may also include a data routing infrastructure that facilitates routing the streaming data from the ultrasonic sensor to a plurality of destinations including local and remote destinations. The routing infrastructure may include a hierarchical multiplexer that is adapted to route the streaming data and data from at least one other sensor to a destination.

**[0564]** In embodiments, ultrasonic monitoring in an industrial environment may be performed by a system for data collection as described herein on rotating elements (e.g., motor shafts and the like), bearings, fittings, couplings, housings, load bearing elements, and the like. The ultrasonic data may be used for pattern recognition, state determination, time-series analysis, and the like, any of which may be performed by computing resources of the industrial environment, which may include local computing resources (e.g., resources located within the environment and/or within a machine in the environment, and the like) and remote computing resources (e.g., cloud-based computing resources, and the like).

**[0565]** In embodiments, ultrasonic monitoring in an industrial environment by a system for data collection may be activated in response to a trigger (e.g., a signal from a motor indicating the motor is operational, and the like), a measure of time (e.g., an amount of time since the most recent monitoring activity, a time of day, a time relative to a trigger, an amount of time until a future event, such as machine shutdown, and the like), an external event (e.g., lightning strike, and the like). The ultrasonic monitoring may be activated in response to implementation of a smart band data collection activity. The ultrasonic monitoring may be activated in response to a data collection template being applied in the industrial environment. The data collection template may be configured based on analysis of prior vibration-caused failures that may be applicable to the monitored element, machine, environment, and the like. Because continuous monitoring of ultrasonic data may require dedicating data routing resources in the industrial environment for extended periods of time, a data collection template for continuous ultrasonic monitoring may be configured with data routing and resource utilization setup information that a controller of a data collection system may use to setup the resources to accommodate continuous ultrasonic monitoring. In an example, a data multiplexer may be configured to dedicate a portion of its outputs to the ultrasonic data for a duration of time specified in the template.

**[0566]** In embodiments, a system for data collection in an industrial environment may perform continuous ultrasonic monitoring. The system may also include processing of the ultrasonic data by a local processor located proximal to the vibration monitoring sensor or device(s). Depending on the computing capabilities of the local processor, functions such as peak detection may be performed. A programmable logic component may provide sufficient computing capabilities to perform peak detection. Processing of the ultrasonic data (local or remote) may provide feedback to a controller associated with the element(s) being monitored. The feedback may be used in a control loop to potentially adjust an operating condition, such as rotational speed, and the like, in an attempt to reduce or at least contain potential negative impact suggested by the ultrasonic data analysis.

**[0567]** In embodiments, a system for data collection in an industrial environment may perform ultrasonic monitoring, and in particular, continuous ultrasonic monitoring. The ultrasonic monitoring data may be combined with multi-dimensional models of an element or machine being monitored to produce a visualization of the ultrasonic data. In embodiments, an image, set of images, video, and the like may be produced that correlates in time with the sensed ultrasonic data. In embodiments, image recognition and/or analysis may be applied to ultrasonic visualizations to further facilitate determining the severity of a condition detected by the ultrasonic monitoring. The image analysis algorithms may be trained to detect normal and out of bounds conditions. Data from load sensors may be combined with ultrasonic data to facilitate testing materials and systems.

**[0568]** In embodiments, a system for data collection in an industrial environment may perform ultrasonic monitoring of a pipeline in an oil and gas pipeline application. Flows of petroleum through pipelines can create vibration and other mechanical effects that may contribute to structural changes in a liner of the pipeline, support members, flow boosters, regulators, diverters, and the like. Performing continuous ultrasonic monitoring of key elements in a pipeline may facilitate detecting early changes in material, such as joint fracturing, and the like, that may lead to failure. A system for data collection in an industrial environment may be configured with ultrasonic sensing devices that may be connected through signal data routing resources, such as crosspoint switches, multiplexers, and the like, to data collection and analysis nodes at which the collected ultrasonic data can be collected and analyzed. In embodiments, a data collection system may include a controller that may reference a data collection plan or template that includes information to facilitate configuring the data sampling, routing, and collection resources of the system to accommodate collecting ultrasonic sample data from a plurality of elements along the pipeline. The template may indicate a sequence for collecting ultrasonic data from a plurality of ultrasonic sensors and the controller may configure a multiplexer to route ultrasonic sensor data from a specified ultrasonic sensor to a destination, such as a data storage controller, analysis processor and the like, for a duration specified in the template. The controller may detect a sequence of collection in the

template, or a sequence of templates to access, and respond to each template in the detected sequence, adjusting the multiplexer and the like to route the sensor data specified in each template to a collector.

**[0569]** In embodiments, a system for data collection in an industrial environment may perform ultrasonic monitoring of compressors in a power generation application. Compressors include several critical rotating elements (e.g., shaft, motor, and the like), rotational support elements (e.g., bearings, couplings, and the like), and the like. A system for data collection configured to facilitate sensing, routing, collection and analysis of ultrasonic data in a power generation application may receive ultrasonic sensor data from a plurality of ultrasonic sensors. Based on a configuration setup template, such as a template for collecting continuous ultrasonic data from one or more ultrasonic sensor devices, a controller may configure resources of the data collection system to facilitate delivery of the ultrasonic data over one or more signal data lines from the sensor(s) at least to data collectors that may be locally or remotely accessible. In embodiments, a template may indicate that ultrasonic data for a main shaft should be retrieved continuously for one minute, and then ultrasonic data for a secondary shaft should be retrieved for another minute, followed by ultrasonic data for a housing of the compressor. The controller may configure a multiplexer that receives the ultrasonic data for each of these sensors to route the data from each sensor in order by configuring a control set that initially directs the inputs from the main shaft ultrasonic sensors through the multiplexer until the time or other measure of data being forwarded is reached. The controller could switch the multiplexer to route the additional ultrasonic data as required to satisfy the second template requirements. The controller may continue adjusting the data collection system resources along the way until all of the ultrasonic monitoring data collection templates are satisfied.

**[0570]** In embodiments, a system for data collection in an industrial environment may perform ultrasonic monitoring of wind turbine gearboxes in a wind energy generation application. Gearboxes in wind turbines may experience a high degree of resistance in operation, due in part to the changing nature of wind, which may cause moving parts, such as the gear planes, hydraulic fluid pumps, regulators, and the like, to prematurely fail. A system for data collection in an industrial environment may be configured with ultrasonic sensors that capture information that may lead to early detection of potential failure modes of these high-strain elements. To ensure that ultrasonic data may be effectively acquired from several different ultrasonic sensors with sufficient coverage to facilitate producing an actionable ultrasonic imaging assessment, the system may be configured specifically to deliver sufficient data at a relatively high rate from one or more of the sensors. Routing channel(s) may be dedicated to transferring ultrasonic sensing data for a duration of time that may be specified in an ultrasonic data collection plan or template. To accomplish this, a controller, such as a programmable logic component, may configure a portion of a crosspoint switch and data collectors to deliver ultrasonic data from a first set of ultrasonic sensors (e.g., those that sense hydraulic fluid flow control elements) to a plurality of data collectors. Another portion of the crosspoint switch may be configured to route additional sensor data that may be useful for evaluating the ultrasonic data (e.g., motor on/off state, thermal condition of sensed parts, and the like) on other data channels to data collectors where the data can be combined and analyzed. The controller may reconfigure the data routing resources to enable collecting ultrasonic data from other elements based on a corresponding data collection template.

**[0571]** Referring to FIG. **50**, a system for data collection in an industrial environment may include one or more ultrasonic sensors **8050** that may connect to a data collection and routing system **8052** that may be configured by a controller **8054** based on an ultrasonic sensor-specific data collection template **8056** that may be provided to the controller **8054** by an ultrasonic data analysis facility **8058**. The controller **8054** may configure resources of the data collection system **8052** and monitor the data collection for a duration of time based on the requirements for data collection in the template **8056**.

**[0572]** An example system for data collection in an industrial environment includes an ultrasonic sensor disposed to capture ultrasonic conditions of an element in the environment, a controller that configures data routing resources of the data collection system to route ultrasonic data being captured by the ultrasonic sensor to a destination location that is specified by an ultrasonic monitoring data collection template, and a processor executing an ultrasonic analysis algorithm on the data after arrival at the destination. In certain further embodiments, an example system includes: where the template defines a time interval of continuous ultrasonic data capture from the ultrasonic sensor; a data routing infrastructure that facilitates routing the streaming data from the ultrasonic sensor to a number of destinations including local and remote destinations; the routing infrastructure including a hierarchical multiplexer that is adapted to route the streaming data and data from at least one other sensor to a destination; where the element in the environment includes rotating elements, bearings, fittings, couplings, housing, and/or load bearing parts; where the template defines a condition of activation of continuous ultrasonic monitoring; and/or where the condition of activation includes a trigger, a smart-band, a template, an external event, and/or a regulatory compliance configuration.

**[0573]** An example system for data collection in an industrial environment includes an ultrasonic sensor disposed to capture ultrasonic conditions of an element of an industrial machine in the environment, a controller that configures data routing resources of the data collection system to route ultrasonic data being captured by the ultrasonic sensor to a destination location that is specified by an ultrasonic monitoring data collection template, and a processor executing an ultrasonic analysis algorithm on the data after arrival at the destination. In certain embodiments, an example system further includes: wherein the template defines a time interval of continuous ultrasonic data capture from the ultrasonic sensor; the system further including a data routing infrastructure that facilitates routing the data from the ultrasonic sensor to a number of destinations including local and remote destinations; the data routing infrastructure including a hierarchical multiplexer that is adapted to route the ultrasonic data and data from at least one other sensor to a destination; where the element of the industrial machine includes rotating elements, bearings, fittings, couplings, housing, and/or load bearing parts; where the template defines a condition of activation of continuous ultrasonic monitoring; and/or where the condition of activation

includes a trigger, a smart-band, a template, an external event, and/or a regulatory compliance configuration.

**[0574]** An example method of continuous ultrasonic monitoring in an industrial environment includes disposing an ultrasonic monitoring device within ultrasonic monitoring range of at least one moving part of an industrial machine in the industrial environment, the ultrasonic monitoring device producing a stream of ultrasonic monitoring data, configuring, based on an ultrasonic monitoring data collection template, a data routing infrastructure to route the stream of ultrasonic monitoring data to a destination, where the infrastructure facilitates routing data from a number of sensors through at an analog crosspoint switch and/or a hierarchical multiplexer, to a number of destinations, routing the ultrasonic monitoring device data through the routing infrastructure to a destination; processing the stored data with an ultrasonic data analysis algorithm that provides an ultrasonic analysis of at least one of a motor shaft, bearings, fittings, couplings, housing, and load bearing parts; and/or storing the data in a computer accessible memory at the destination. Certain further embodiments of an example method include: where the data collection template defines a time interval of continuous ultrasonic data capture from the ultrasonic monitoring device; where configuring the data routing infrastructure includes configuring the hierarchical multiplexer to route the ultrasonic data and data from at least one other sensor to a destination; where ultrasonic monitoring is performed on at least one element in an industrial machine that includes rotating elements, bearings, fittings, couplings, a housing, and/or load bearing parts; where the template defines a condition of activation of continuous ultrasonic monitoring; where the condition of activation includes a trigger, a smart-band, a template, an external event, and/or a regulatory compliance configuration; where the ultrasonic data analysis algorithm performs pattern recognition; and/or where routing the ultrasonic monitoring device data is in response to detection of a condition in the industrial environment associated with the at least one moving part.

**[0575]** Without limitation, an example system for monitoring an oil or gas pipeline includes a processor executing an ultrasonic analysis algorithm on the pipeline data after arrival at the destination; an example system for monitoring a power generation compressor includes a processor executing an ultrasonic analysis algorithm on the power generation compressor data after arrival at the destination; and an example system for monitoring a wind turbine gearbox includes a processor executing an ultrasonic analysis algorithm on the gearbox data after arrival at the destination.

**[0576]** Industrial components such as pumps, compressors, air conditioning units, mixers, agitators, motors, and engines may play critical roles in the operation of equipment in a variety of environments including as part of manufacturing equipment in industrial environments such as factories, gas handling systems, mining operations, automotive systems, and the like.

**[0577]** There are a wide variety of pumps such as a variety of positive displacement pumps, velocity pumps, and impulse pumps. Velocity or centrifugal pumps typically comprise an impeller with curved blades which, when an impeller is immersed in a fluid, such as water or a gas, causes the fluid or gas to rotate in the same rotational direction as the impeller. As the fluid or gas rotates, centrifugal force causes it to move to the outer diameter of the pump, e.g., the pump housing, where it can be collected and further processed. The removal of the fluid or gas from the outer circumference may result in lower pressure at a pump input orifice causing new fluid or gas to be drawn into the pump.

**[0578]** Positive displacement pumps may comprise reciprocating pumps, progressive cavity pumps, gear or screw pumps, such as reciprocating pumps typically comprise a piston which alternately creates suction, which opens an inlet valve and draws a liquid or gas into a cylinder, and pressure, which closes the inlet valve and forces the liquid or gas present out of the cylinder through an outlet valve. This method of pumping may result in periodic waves of pressurized liquid or gas being introduced into the downstream system.

**[0579]** Some automotive vehicles such as cars and trucks may use a water cooling system to keep the engine from overheating. In some automobiles, a centrifugal water pump, driven by a belt associated with a driveshaft of the vehicle, is used to force a mixture of water and coolant through the engine to maintain an acceptable engine temperature. Overheating of the engine may be highly destructive to the engine and yet it may be difficult or costly to access a water pump installed in a vehicle.

**[0580]** In embodiments, a vehicle water pump may be equipped with a plurality of sensors for measuring attributes associated with the water pump such as temperature of bearings or pump housing, vibration of a driveshaft associated with the pump, liquid leakage, and the like. These sensors may be connected either directly to a monitoring device or through an intermediary device using a mix of wired and wireless connection techniques. A monitoring device may have access to detection values corresponding to the sensors where the detection values correspond directly to the sensor output or a processed version of the data output such as a digitized or sampled version of the sensor output, and/or a virtual sensor or modeled value correlated from other sensed values. The monitoring device may access and process the detection values using methods discussed elsewhere herein to evaluate the health of the water pump and various components of the water pump prone to wear and failure, e.g., bearings or sets of bearings, drive shafts, motors, and the like. The monitoring device may process the detection values to identify a torsion of the drive shaft of the pump. The identified torsion may then be evaluated relative to expected torsion based on the specific geometry of the water pump and how it is installed in the vehicle. Unexpected torsion may put undue stress on the driveshaft and may be a sign of deteriorating health of the pump. The monitoring device may process the detection values to identify unexpected vibrations in the shaft or unexpected temperature values or temperature changes in the bearings or in the housing in proximity to the bearings. In some embodiments, the sensors may include multiple temperature sensors positioned around the water pump to identify hot spots among the bearings or across the pump housing which might indicate potential bearing failure. The monitoring device may process the detection values associated with water sensors to identify liquid leakage near the pump which may indicate a bad seal. The detection values may be jointly analyzed to provide insight into the health of the pump.

**[0581]** In an illustrative example, detection values associated with a vehicle water pump may show a sudden increase in vibration at a higher frequency than the operational rotation of the pump with a corresponding localized increase

of temperature associated with a specific phase in the pump cycle. Together these may indicate a localized bearing failure.

**[0582]** Production lines may also include one or more pumps for moving a variety of material including acidic or corrosive materials, flammable materials, minerals, fluids comprising particulates of varying sizes, high viscosity fluids, variable viscosity fluids, or high-density fluids. Production line pumps may be designed to specifically meet the needs of the production line including pump composition to handle the various material types, or torque needed to move the fluid at the desired speed or with the desired pressure. Because these production lines may be continuous process lines, it may be desirable to perform proactive maintenance rather than wait for a component to fail. Variations in pump speed and pressure may have the potential to negatively impact the final product, and the ability to identify issues in the final product may lag the actual component deterioration by an unacceptably long period.

**[0583]** In embodiments, an industrial pump may be equipped with a plurality of sensors for measuring attributes associated with the pump such as temperature of bearings or pump housing, vibration of a driveshaft associated with the pump, vibration of input or output lines, pressure, flow rate, fluid particulate measures, vibrations of the pump housing, and the like. These sensors may be connected either directly to a monitoring device or through an intermediary device using a mix of wired and wireless connection techniques. A monitoring device may have access to detection values corresponding to the sensors where the detection values correspond directly to the sensor output of a processed version of the data output such as a digitized or sampled version of the sensor output. The monitoring device may access and process the detection values using methods discussed elsewhere herein to evaluate the health of the pump overall, evaluate the health of pump components, predict potential down line issues arising from atypical pump performance, or changes in fluid being pumped. The monitoring device may process the detection values to identify torsion on the drive shaft of the pump. The identified torsion may then be evaluated relative to expected torsion based on the specific geometry of the pump and how it is installed in the equipment relative to other components on the assembly line. Unexpected torsion may put undue stress on the driveshaft and may be a sign of deteriorating health of the pump. Vibration of the inlet and outlet pipes may also be evaluated for unexpected or resonant vibrations which may be used to drive process controls to avoid certain pump frequencies. Changes in vibration may also be due to changes in fluid composition or density, amplifying or dampening vibrations at certain frequencies. The monitoring device may process the detection values to identify unexpected vibrations in the shaft, unexpected temperature values, or temperature changes in the bearings or in the housing in proximity to the bearings. In some embodiments, the sensors may include multiple temperature sensors positioned around the pump to identify hot spots among the bearings or across the pump housing which might indicated potential bearing failure. For some pumps, when the fluid being pumped is corrosive or contains large amounts of particulates, there may be damage to the interior components of the pump in contact with the fluid due to cumulative exposure to the fluid. This may be reflected in unanticipated variations in output pressure. Additionally or alternatively, if a gear in a gear pump begins to corrode and no longer forces all the trapped fluid out this may result in increased pump speed, fluid cavitation, and/or unexpected vibrations in the output pipe.

**[0584]** Compressors increase the pressure of a gas by decreasing the volume occupied by the gas or increasing the amount of the gas in a confined volume. There may be positive-displacement compressors that utilize the motion of pistons or rotary screws to move the gas into a pressurized holding chamber. There are dynamic displacement gas compressors that use centrifugal force to accelerate the gas into a stationary compressor where the kinetic energy is converted to pressure. Compressors may be used to compress various gases for use on an assembly line. Compressed air may power pneumatic equipment on an assembly line. In the oil and gas industry, flash gas compressors may be used to compress gas so that it leaves a hydrocarbon liquid when it enters a lower pressure environment. Compressors may be used to restore pressure in gas and oil pipelines, to mix fluids of interest, and/or to transfer or transport fluids of interest. Compressors may be used to enable the underground storage of natural gas.

**[0585]** Like pumps, compressors may be equipped with a plurality of sensors for measuring attributes associated with the compressor such as temperature of bearings or compressor housing, vibration of a driveshaft, transmission, gear box and the like associated with the compressor, vessel pressure, flow rate, and the like. These sensors may be connected either directly to a monitoring device or through an intermediary device using a mix of wired and wireless connection techniques. A monitoring device may have access to detection values corresponding to the sensors where the detection values correspond directly to the sensor output of a processed version of the data output such as a digitized or sampled version of the sensor output. The monitoring device may access and process the detection values using methods described elsewhere herein to evaluate the health of the compressor overall, evaluate the health of compressor components and/or predict potential down line issues arising from atypical compressor performance. The monitoring device may process the detection values to identify torsion on a driveshaft of the compressor. The identified torsion may then be evaluated relative to expected torsion based on the specific geometry of the compressor and how it is installed in the equipment relative to other components and pieces of equipment. Unexpected torsion may put undue stress on the driveshaft and may be a sign of deteriorating health of the compressor. Vibration of the inlet and outlet pipes may also be evaluated for unexpected or resonant vibrations which may be used to drive process controls to avoid certain compressor frequencies. The monitoring device may process the detection values to identify unexpected vibrations in the shaft, unexpected temperature values or temperature changes in the bearings or in the housing in proximity to the bearings. In some embodiments, the sensors may include multiple temperature sensors positioned around the compressor to identify hot spots among the bearings or across the compressor housing, which might indicate potential bearing failure. In some embodiments, sensors may monitor the pressure in a vessel storing the compressed gas. Changes in the pressure or rate of pressure change may be indicative of problems with the compressor.

**[0586]** Agitators and mixers are used in a variety of industrial environments. Agitators may be used to mix

together different components such as liquids, solids, or gases. Agitators may be used to promote a more homogenous mixture of component materials. Agitators may be used to promote a chemical reaction by increasing exposure between different component materials and adding energy to the system. Agitators may be used to promote heat transfer to facilitate uniform heating or cooling of a material.

**[0587]** Mixers and agitators are used in such diverse industries as chemical production, food production, pharmaceutical production, and the like. There are paint and coating mixers, adhesive and sealant mixers, oil and gas mixers, water treatment mixers, wastewater treatment mixers, and the like.

**[0588]** Agitators may comprise equipment that rotates or agitates an entire tank or vessel in which the materials to be mixed are located, such as a concrete mixer. Effective agitations may be influenced by the number and shape of baffles in the interior of the tank. Agitation by rotation of the tank or vessel may be influenced by the axis of rotation relative to the shape of the tank, direction of rotation, and external forces such as gravity acting on the material in the tank. Factors affecting the efficacy of material agitation or mixing by agitation of the tank or vessel may include axes of rotation, and amplitude and frequency of vibration along different axes. These factors may be selected based on the types of materials being selected, their relative viscosities, specific gravities, particulate count, any shear thinning or shear thickening anticipated for the component materials or mixture, flow rates of material entering or exiting the vessel or tank, direction and location of flows of material entering of exiting the vessel, and the like.

**[0589]** Agitators, large tank mixers, portable tank mixers, tote tank mixers, drum mixers, and mounted mixers (with various mount types) may comprise a propeller or other mechanical device such as a blade, vane, or stator inserted into a tank of materials to be mixed, while rotating a propeller or otherwise moving a mechanical device. These may include airfoil impellers, fixed pitch blade impellers, variable pitch blade impellers, anti-ragging impellers, fixed radial blade impellers, marine-type propellers, collapsible airfoil impellers, collapsible pitched blade impellers, collapsible radial blade impellers, and variable pitch impellers. Agitators may be mounted such that the mechanical agitation is centered in the tank. Agitators may be mounted such that they are angled in a tank or are vertically or horizontally offset from the center of the vessel. The agitators may enter the tank from above, below, or the side of the tank. There may be a plurality of agitators in a single tank to achieve uniform mixing throughout the tank or container of chemicals.

**[0590]** Agitators may include the strategic flow or introduction of component materials into the vessel including the location and direction of entry, rate of entry, pressure of entry, viscosity of material, specific gravity of the material, and the like.

**[0591]** Successful agitation of mixing of materials may occur with a combination of techniques such as one or more propellers in a baffled tank where components are being introduced at different locations and at different rates.

**[0592]** In embodiments, an industrial mixer or agitator may be equipped with a plurality of sensors for measuring attributes associated with the industrial mixer such as: temperature of bearings or tank housing, vibration of driveshafts associated with a propeller or other mechanical device such as a blade, vane or stator, vibration of input or output lines, pressure, flow rate, fluid particulate measures, vibrations of the tank housing and the like. These sensors may be connected either directly to a monitoring device or through an intermediary device using a mix of wired and wireless connection techniques. A monitoring device may have access to detection values corresponding to the sensors where the detection values correspond directly to the sensor output of a processed version of the data, output such as a digitized or sampled version of the sensor output, fusion of data from multiple sensors, and the like. The monitoring device may access and process the detection values using methods discussed elsewhere herein to evaluate the health of the agitator or mixer overall, evaluate the health of agitator or mixer components, predict potential down line issues arising from atypical performance or changes in composition of material being agitated. For example, the monitoring device may process the detection values to identify torsion on the driveshaft of an agitating impeller. The identified torsion may then be evaluated relative to expected torsion based on the specific geometry of the agitator and how it is installed in the equipment relative to other components and/or pieces of equipment. Unexpected torsion may put undue stress on the driveshaft and may be a sign of deteriorating health of the agitator. Vibration of inflow and outflow pipes may be monitored for unexpected or resonant vibrations which may be used to drive process controls to avoid certain agitation frequencies. Inflow and outflow pipes may also be monitored for unexpected flow rates, unexpected particulate content, and the like. Changes in vibration may also be due to changes in fluid composition, or density amplifying or dampening vibrations at certain frequencies. The monitoring device may distribute sensors to collect detection values which may be used to identify unexpected vibrations in the shaft, or unexpected temperature values or temperature changes in the bearings or in the housing in proximity to the bearings. For some agitators, when the fluid being agitated is corrosive or contains large amounts of particulates, there may be damage to the interior components of the agitator (e.g., baffles, propellers, blades, and the like) which are in contact with the materials, due to cumulative exposure to the materials.

**[0593]** HVAC, air-conditioning systems, and the like may use a combination of compressors and fans to cool and circulate air in industrial environments. Similar to the discussion of compressors and agitators, these systems may include a number of rotating components whose failure or reduced performance might negatively impact the working environment and potentially degrade product quality. A monitoring device may be used to monitor sensors measuring various aspects of the one or more rotating components, the venting system, environmental conditions, and the like. Components of the HVAC/air-conditioning systems may include fan motors, driveshafts, bearings, compressors, and the like. The monitoring device may access and process the detection values corresponding to the sensor outputs according to methods discussed elsewhere herein to evaluate the overall health of the air-conditioning unit, HVAC system, and like as well as components of these systems, identify operational states, predict potential issues arising from atypical performance, and the like. Evaluation techniques may include bearing analysis, torsional analysis of driveshafts, rotors and stators, peak value detection, and the like.

The monitoring device may process the detection values to identify issues such as torsion on a driveshaft, potential bearing failures, and the like.

**[0594]** Assembly line conveyors may comprise a number of moving and rotating components as part of a system for moving material through a manufacturing process. These assembly line conveyors may operate over a wide range of speeds. These conveyances may also vibrate at a variety of frequencies as they convey material horizontally to facilitate screening, grading, laning for packaging, spreading, dewatering, feeding product into the next in-line process, and the like.

**[0595]** Conveyance systems may include engines or motors, one or more driveshafts turning rollers or bearings along which a conveyor belt may move. A vibrating conveyor may include springs and a plurality of vibrators which vibrate the conveyor forward in a sinusoidal manner.

**[0596]** In embodiments, conveyors and vibrating conveyors may be equipped with a plurality of sensors for measuring attributes associated with the conveyor such as temperature of bearings, vibration of driveshafts, vibrations of rollers along which the conveyor travels, velocity and speed associated with the conveyor, and the like. The monitoring device may access and process the detection values using methods discussed elsewhere herein to evaluate the overall health of the conveyor as well as components of the conveyor, predict potential issues arising from atypical performance, and the like. Techniques for evaluating the conveyors may include bearing analysis, torsional analysis, phase detection/phase lock loops to align detection values from different parts of the conveyor, frequency transformations and frequency analysis, peak value detection, and the like. The monitoring device may process the detection values to identify torsion on a driveshaft, potential bearing failures, uneven conveyance and like.

**[0597]** In an illustrative example, a paper-mill conveyance system may comprise a mesh onto which the paper slurry is coated. The mesh transports the slurry as liquid evaporates and the paper dries. The paper may then be wound onto a core until the roll reaches diameters of up to three meters. The transport speeds of the paper-mill range from traditional equipment operating at 14-48 meters/minute to new, high-speed equipment operating at close to 2000 meters/minute. For slower machines, the paper may be winding onto the roll at 14 meters/minute which, towards the end of the roll having a diameter of approximately three meters would indicate that the take up roll may be rotating at speeds on the order of a couple of rotations a minute. Vibrations in the web conveyance or torsion across the take up roller may result in damage to the paper, skewing of the paper on the web, or skewed rolls which may result in equipment downtime or product that is lower in quality or unusable. Additionally, equipment failure may result in costly machine shutdowns and loss of product. Therefore, the ability to predict problems and provide preventative maintenance and the like may be useful.

**[0598]** Monitoring truck engines and steering systems to facilitate timely maintenance and avoid unexpected breakdowns may be important. Health of the combustion chamber, rotating crankshafts, bearings, and the like may be monitored using a monitoring device structured to interpret detection values received from a plurality of sensors measuring a variety of characteristics associated with engine components including temperature, torsion, vibration, and the like. As discussed above, the monitoring device may process the detection values to identify engine bearing health, torsional vibrations on a crankshaft/driveshaft, unexpected vibrations in the combustion chambers, overheating of different components, and the like. Processing may be done locally or data may be collected across a number of vehicles and jointly analyzed. The monitoring device may process detection values associated with the engine, combustion chambers, and the like. Sensors may monitor temperature, vibration, torsion, acoustics, and the like to identify issues. A monitoring device or system may use techniques such as peak detection, bearing analysis, torsion analysis, phase detection, PLL, band pass filtering, and the like to identify potential issues with the steering system and bearing and torsion analysis to identify potential issues with rotating components on the engine. This identification of potential issues may be used to schedule timely maintenance, reduce operation prior to maintenance, and influence future component design.

**[0599]** Drilling machines and screwdrivers in the oil and gas industries may be subjected to significant stresses. Because they are frequently situated in remote locations, an unexpected breakdown may result in extended down time due to the lead-time associated with bringing in replacement components. The health of a drilling machine or screwdriver and associated rotating crankshafts, bearings, and the like may be monitored using a monitoring device structured to interpret detection values received from a plurality of sensors measuring a variety of characteristics associated with the drilling machine or screwdriver including temperature, torsion, vibration, rotational speed, vertical speed, acceleration, image sensors, and the like. As discussed above, the monitoring device may process the detection values to identify equipment health, torsional vibrations on a crankshaft/driveshaft, unexpected vibrations in the component, overheating of different components, and the like. Processing may be done locally or data collected across a number of machines and jointly analyzed. The monitoring device may jointly process detection values, equipment maintenance records, product records, historical data, and the like to identify correlations between detection values, current and future states of the component, anticipated lifetime of the component or piece of equipment, and the like. Sensors may monitor temperature, vibration, torsion, acoustics, and the like to identify issues such as unanticipated torsion in the drill shaft, slippage in the gears, overheating, and the like. A monitoring device or system may use techniques such as peak detection, bearing analysis, torsion analysis, phase detection, PLL, band pass filtering, and the like to identify potential issues. This identification of potential issues may be used to schedule timely maintenance, order new or replacement components, reduce operation prior to maintenance, and influence future component design.

**[0600]** Similarly, it may be desirable to monitor the health of gearboxes operating in an oil and gas field. A monitoring device may be structured to interpret detection values received from a plurality of sensors measuring a variety of characteristics associated with the gearbox such as temperature, vibration, and the like. The monitoring device may process the detection values to identify gear and gearbox health and anticipated life. Processing may be done locally or data collected across a number of gearboxes and jointly analyzed. The monitoring device may jointly process detection values, equipment maintenance records, product

records historical data, and the like to identify correlations between detection values, current and future states of the gearbox, anticipated lifetime of the gearbox and associated components, and the like. A monitoring device or system may use techniques such as peak detection, bearing analysis, torsion analysis, phase detection, PLL, band pass filtering, to identify potential issues. This identification of potential issues may be used to schedule timely maintenance, order new or replacement components, reduce operation prior to maintenance, and influence future equipment design.

**[0601]** Refining tanks in the oil and gas industries may be subjected to significant stresses due to the chemical reactions occurring inside. Because a breach in a tank could result in the release of potentially toxic chemicals, it may be beneficial to monitor the condition of the refining tank and associated components. Monitoring a refining tank to collect a variety of ongoing data may be used to predict equipment wear, component wear, unexpected stress, and the like. Given predictions about equipment health, such as the status of a refining tank, may be used to schedule timely maintenance, order new or replacement components, reduce operation prior to maintenance, and influence future component design. Similar to the discussion above, a refining tank may be monitored using a monitoring device structured to interpret detection values received from a plurality of sensors measuring a variety of characteristics associated with the refining tank such as temperature, vibration, internal and external pressure, the presence of liquid or gas at seams and ports, and the like. The monitoring device may process the detection values to identify equipment health, unexpected vibrations in the tank, overheating of the tank or uneven heating across the tank, and the like. Processing may be done locally or data collected across a number of tanks and jointly analyzed. The monitoring device may jointly process detection values, equipment maintenance records, product records historical data, and the like to identify correlations between detection values, current and future states of the tank, anticipated lifetime of the tank and associated components, and the like. A monitoring device or system may use techniques such as peak detection, bearing analysis, torsion analysis, phase detection, PLL, band pass filtering, and the like to identify potential issues.

**[0602]** Similarly, it may be desirable to monitor the health of centrifuges operating in an oil and gas refinery. A monitoring device may be structured to interpret detection values received from a plurality of sensors measuring a variety of characteristics associated with the centrifuge such as temperature, vibration, pressure, and the like. The monitoring device may process the detection values to identify equipment health, unexpected vibrations in the centrifuge, overheating, pressure across the centrifuge, and the like. Processing may be done locally or data collected across a number of centrifuges and jointly analyzed. The monitoring device may jointly process detection values, equipment maintenance records, product records historical data, and the like to identify correlations between detection values, current and future states of the centrifuge, anticipated lifetime of the centrifuge and associated components, and the like. A monitoring device or system may use techniques such as peak detection, bearing analysis, torsion analysis, phase detection, PLL, band pass filtering, to identify potential issues. This identification of potential issues may be used to schedule timely maintenance, order new or replacement components, reduce operation prior to maintenance and influence future equipment design.

**[0603]** In embodiments, information about the health or other status or state information of or regarding a component or piece of industrial equipment may be obtained by monitoring the condition of various components throughout a process. Monitoring may include monitoring the amplitude of a sensor signal measuring attributes such as temperature, humidity, acceleration, displacement, and the like. An embodiment of a data monitoring device **8100** is shown in FIG. **51** and may include a plurality of sensors **8106** communicatively coupled to a controller **8102**. The controller **8102** may include a data acquisition circuit **8104**, a data analysis circuit **8108**, a MUX control circuit **8114**, and a response circuit **8110**. The data acquisition circuit **8104** may include a MUX **8112** where the inputs correspond to a subset of the detection values. The MUX control circuit **8114** may be structured to provide adaptive scheduling of the logical control of the MUX and the correspondence of MUX input and detected values based on a subset of the plurality of detection values and/or a command from the response circuit **8110** and/or the output of the data analysis circuit **8104**. The data analysis circuit **8108** may comprise one or more of a peak detection circuit, a phase differential circuit, a PLL circuit, a bandpass filter circuit, a frequency transformation circuit, a frequency analysis circuit, a torsional analysis circuit, a bearing analysis circuit, an overload detection circuit, a sensor fault detection circuit, a vibrational resonance circuit for the identification of unfavorable interaction among machines or components, a distortion identification circuit for the identification of unfavorable distortions such as deflections shapes upon operation, overloading of weight, excessive forces, stress and strain-based effects, and the like. The data analysis circuit **8108** may output a component health status as a result of the analysis.

**[0604]** The data analysis circuit **8108** may determine a state, condition, or status of a component, part, sub-system, or the like of a machine, device, system or item of equipment (collectively referred to herein as a component health status) based on a maximum value of a MUX output for a given input or a rate of change of the value of a MUX output for a given input. The data analysis circuit **8108** may determine a component health status based on a time integration of the value of a MUX for a given input. The data analysis circuit **8108** may determine a component health status based on phase differential of MUX output relative to an on-board time or another sensor. The data analysis circuit **8108** may determine a component health status based on a relationship of value, phase, phase differential, and rate of change for MUX outputs corresponding to one or more input detection values. The data analysis circuit **8108** may determine a component health status based on process stage or component specification or component anticipated state.

**[0605]** The multiplexer control circuit **8114** may adapt the scheduling of the logical control of the multiplexer based on a component health status, an anticipated component health status, the type of component, the type of equipment being measured, an anticipated state of the equipment, a process stage (different parameters/sensor values) may be important at different stages in a process. The multiplexer control circuit **8114** may adapt the scheduling of the logical control of the multiplexer based on a sequence selected by a user or a remote monitoring application, or on the basis of a user request for a specific value. The multiplexer control circuit

**8114** may adapt the scheduling of the logical control of the multiplexer based on the basis of a storage profile or plan (such as based on type and availability of storage elements and parameters as described elsewhere in this disclosure and in the documents incorporated herein by reference), network conditions or availability (also as described elsewhere in this disclosure and in the documents incorporated herein by reference), or value or cost of component or equipment.

**[0606]** The plurality of sensors **8106** may be wired to ports on the data acquisition circuit **8104**. The plurality of sensors **8106** may be wirelessly connected to the data acquisition circuit **8104**. The data acquisition circuit **8104** may be able to access detection values corresponding to the output of at least one of the plurality of sensors **8106** where the sensors **8106** may be capturing data on different operational aspects of a piece of equipment or an operating component.

**[0607]** The selection of the plurality of sensors **8106** for a data monitoring device **8100** designed for a specific component or piece of equipment may depend on a variety of considerations such as accessibility for installing new sensors, incorporation of sensors in the initial design, anticipated operational and failure conditions, resolution desired at various positions in a process or plant, reliability of the sensors, and the like. The impact of a failure, time response of a failure (e.g., warning time and/or off-nominal modes occurring before failure), likelihood of failure, and/or sensitivity required, and/or difficulty to detect failure conditions may drive the extent to which a component or piece of equipment is monitored with more sensors, and/or higher capability sensors being dedicated to systems where unexpected or undetected failure would be costly or have severe consequences.

**[0608]** Depending on the type of equipment, the component being measured, the environment in which the equipment is operating, and the like, sensors **8106** may comprise one or more of, without limitation, a vibration sensor, a thermometer, a hygrometer, a voltage sensor and/or a current sensor (for the component and/or other sensors measuring the component), an accelerometer, a velocity detector, a light or electromagnetic sensor (e.g., determining temperature, composition, and/or spectral analysis, and/or object position or movement), an image sensor, a structured light sensor, a laser-based image sensor, a thermal imager, an acoustic wave sensor, a displacement sensor, a turbidity meter, a viscosity meter, an axial load sensor, a radial load sensor, a tri-axial sensor, an accelerometer, a speedometer, a tachometer, a fluid pressure meter, an air flow meter, a horsepower meter, a flow rate meter, a fluid particle detector, an optical (laser) particle counter, an ultrasonic sensor, an acoustical sensor, a heat flux sensor, a galvanic sensor, a magnetometer, a pH sensor, and the like, including, without limitation, any of the sensors described throughout this disclosure and the documents incorporated by reference.

**[0609]** The sensors **8106** may provide a stream of data over time that has a phase component, such as relating to acceleration or vibration, allowing for the evaluation of phase or frequency analysis of different operational aspects of a piece of equipment or an operating component. The sensors **8106** may provide a stream of data that is not conventionally phase-based, such as temperature, humidity, load, and the like. The sensors **8106** may provide a continuous or near continuous stream of data over time, periodic readings, event-driven readings, and/or readings according to a selected interval or schedule.

**[0610]** The sensors **8106** may monitor components such as bearings, sets of bearings, motors, driveshafts, pistons, pumps, conveyors, vibrating conveyors, compressors, drills, and the like in vehicles, oil and gas equipment in the field, in assembly line components, and the like.

**[0611]** In embodiments, as illustrated in FIG. **51**, the sensors **8106** may be part of the data monitoring device **8100**, referred to herein in some cases as a data collector, which in some cases may comprise a mobile or portable data collector. In embodiments, as illustrated in FIGS. **52** and **53**, one or more external sensors **8126**, which are not explicitly part of a monitoring device **8120** but rather are new, previously attached to or integrated into the equipment or component, may be opportunistically connected to, or accessed by the monitoring device **8120**. The monitoring device **8120** may include a controller **8122**. The controller **8122** may include a data acquisition circuit **8104**, a data analysis circuit **8108**, a MUX control circuit **8114**, and a response circuit **8110**. The data acquisition circuit **8104** may comprise a MUX **8112** where the inputs correspond to a subset of the detection values. The MUX control circuit **8114** may be structured to provide the logical control of the MUX and the correspondence of MUX input and detected values based on a subset of the plurality of detection values and/or a command from the response circuit **8110** and/or the output of the data analysis circuit **8108**. The data analysis circuit **8108** may comprise one or more of a peak detection circuit, a phase differential circuit, a PLL circuit, a bandpass filter circuit, a frequency transformation circuit, a frequency analysis circuit, a torsional analysis circuit, a bearing analysis circuit, an overload detection circuit, vibrational resonance circuit for the identification of unfavorable interaction among machines or components, a distortion identification circuit for the identification of unfavorable distortions such as deflections shapes upon operation, stress and strain-based effects, and the like.

**[0612]** The one or more external sensors **8126** may be directly connected to the one or more input ports **8128** on the data acquisition circuit **8104** of the controller **8122** or may be accessed by the data acquisition circuit **8104** wirelessly, such as by a reader, interrogator, or other wireless connection, such as over a short-distance wireless protocol. In embodiments, as shown in FIG. **53**, a data acquisition circuit **8104** may further comprise a wireless communication circuit **8130**. The data acquisition circuit **8104** may use the wireless communication circuit **8130** to access detection values corresponding to the one or more external sensors **8126** wirelessly or via a separate source or some combination of these methods.

**[0613]** In embodiments, as illustrated in FIG. **54**, the controller **8134** may further comprise a data storage circuit **8136**. The data storage circuit **8136** may be structured to store one or more of sensor specifications, component specifications, anticipated state information, detected values, multiplexer output, component models, and the like. The data storage circuit **8136** may provide specifications and anticipated state information to the data analysis circuit **8108**.

**[0614]** In embodiments, the response circuit **8110** may initiate a variety of actions based on the sensor status provided by the data analysis circuit **8108**. The response circuit **8110** may adjust a sensor scaling value (e.g., from 100 mV/gram to 10 mV/gram). The response circuit **8110** may select an alternate sensor from a plurality available. The

response circuit **8110** may acquire data from a plurality of sensors of different ranges. The response circuit **8110** may recommend an alternate sensor. The response circuit **8110** may issue an alarm or an alert.

**[0615]** In embodiments, the response circuit **8110** may cause the data acquisition circuit **8104** to enable or disable the processing of detection values corresponding to certain sensors based on the component status. This may include switching to sensors having different response rates, sensitivity, ranges, and the like; accessing new sensors or types of sensors, accessing data from multiple sensors, and the like. Switching may be undertaken based on a model, a set of rules, or the like. In embodiments, switching may be under control of a machine learning system, such that switching is controlled based on one or more metrics of success, combined with input data, over a set of trials, which may occur under supervision of a human supervisor or under control of an automated system. Switching may involve switching from one input port to another (such as to switch from one sensor to another). Switching may involve altering the multiplexing of data, such as combining different streams under different circumstances. Switching may involve activating a system to obtain additional data, such as moving a mobile system (such as a robotic or drone system), to a location where different or additional data is available, such as positioning an image sensor for a different view or positioning a sonar sensor for a different direction of collection, or to a location where different sensors can be accessed, such as moving a collector to connect up to a sensor at a location in an environment by a wired or wireless connection. This switching may be implemented by directing changes to the multiplexer (MUX) control circuit **8114**.

**[0616]** In embodiments, the response circuit **8110** may make recommendations for the replacement of certain sensors in the future with sensors having different response rates, sensitivity, ranges, and the like. The response circuit **8110** may recommend design alterations for future embodiments of the component, the piece of equipment, the operating conditions, the process, and the like.

**[0617]** In embodiments, the response circuit **8110** may recommend maintenance at an upcoming process stop or initiate a maintenance call where the maintenance may include the replacement of the sensor with the same or an alternate type of sensor having a different response rate, sensitivity, range, and the like. In embodiments, the response circuit **8110** may implement or recommend process changes—for example to lower the utilization of a component that is near a maintenance interval, operating off-nominally, or failed for purpose but is still at least partially operational, to change the operating speed of a component (such as to put it in a lower-demand mode), to initiate amelioration of an issue (such as to signal for additional lubrication of a roller bearing set, or to signal for an alignment process for a system that is out of balance), and the like.

**[0618]** In embodiments, the data analysis circuit **8108** and/or the response circuit **8110** may periodically store certain detection values and/or the output of the multiplexers and/or the data corresponding to the logic control of the MUX in the data storage circuit **8136** to enable the tracking of component performance over time. In embodiments, based on sensor status, as described elsewhere herein, recently measured sensor data and related operating conditions such as RPMs, component loads, temperatures, pressures, vibrations, or other sensor data of the types described throughout this disclosure in the data storage circuit **8136** enable the backing out of overloaded/failed sensor data. The signal evaluation circuit **8108** may store data at a higher data rate for greater granularity in future processing, the ability to reprocess at different sampling rates, and/or to enable diagnosing or post-processing of system information where operational data of interest is flagged, and the like.

**[0619]** In embodiments, as shown in FIGS. **55**, **56**, **57**, and **58**, a data monitoring system **8138** may include at least one data monitoring device **8140**. The at least one data monitoring device **8140** may include sensors **8106** and a controller **8142** comprising a data acquisition circuit **8104**, a data analysis circuit **8108**, a data storage circuit **8136**, and a communication circuit **8146** to allow data and analysis to be transmitted to a monitoring application **8150** on a remote server **8148**. The signal evaluation circuit **8108** may include at least an overload detection circuit (e.g., reference FIGS. **101** and **102**) and/or a sensor fault detection circuit (e.g., reference FIGS. **101** and **102**). The signal evaluation circuit **8108** may periodically share data with the communication circuit **8146** for transmittal to the remote server **8148** to enable the tracking of component and equipment performance over time and under varying conditions by a monitoring application **8150**. Based on the sensor status, the signal evaluation circuit **8108** and/or response circuit **8110** may share data with the communication circuit **8146** for transmittal to the remote server **8148** based on the fit of data relative to one or more criteria. Data may include recent sensor data and additional data such as RPMs, component loads, temperatures, pressures, vibrations, and the like for transmittal. The signal evaluation circuit **8108** may share data at a higher data rate for transmittal to enable greater granularity in processing on the remote server.

**[0620]** In embodiments, as shown in FIG. **55**, the communication circuit **8146** may communicate data directly to a remote server **8148**. In embodiments, as shown in FIG. **56**, the communication circuit **8146** may communicate data to an intermediate computer **8152** which may include a processor **8154** running an operating system **8156** and a data storage circuit **8158**.

**[0621]** In embodiments as illustrated in FIGS. **57** and **58**, a data collection system **8160** may have a plurality of monitoring devices **8144** collecting data on multiple components in a single piece of equipment, collecting data on the same component across a plurality of pieces of equipment, (both the same and different types of equipment) in the same facility, as well as collecting data from monitoring devices in multiple facilities. A monitoring application **8150** on a remote server **8148** may receive and store one or more of detection values, timing signals, and data coming from a plurality of the various monitoring devices **8144**.

**[0622]** In embodiments, as shown in FIG. **57**, the communication circuit **8146** may communicate data directly to a remote server **8148**. In embodiments, as shown in FIG. **58**, the communication circuit **8146** may communicate data to an intermediate computer **8152** which may include a processor **8154** running an operating system **8156** and a data storage circuit **8158**. There may be an individual intermediate computer **8152** associated with each monitoring device **8140** or an individual intermediate computer **8152** may be associated with a plurality of monitoring devices **8144** where the intermediate computer **8152** may collect data from a plurality of data monitoring devices and send the

cumulative data to the remote server **8148**. Communication to the remote server **8148** may be streaming, batch (e.g., when a connection is available), or opportunistic.

**[0623]** The monitoring application **8150** may select subsets of the detection values to be jointly analyzed. Subsets for analysis may be selected based on a single type of sensor, component, or a single type of equipment in which a component is operating. Subsets for analysis may be selected or grouped based on common operating conditions such as size of load, operational condition (e.g., intermittent or continuous), operating speed or tachometer output, common ambient environmental conditions such as humidity, temperature, air or fluid particulate, and the like. Subsets for analysis may be selected based on the effects of other nearby equipment such as nearby machines rotating at similar frequencies, nearby equipment producing electromagnetic fields, nearby equipment producing heat, nearby equipment inducing movement or vibration, nearby equipment emitting vapors, chemicals or particulates, or other potentially interfering or intervening effects.

**[0624]** In embodiments, the monitoring application **8150** may analyze the selected subset. In an example, data from a single sensor may be analyzed over different time periods such as one operating cycle, several operating cycles, a month, a year, the life of the component, or the like. Data from multiple sensors of a common type measuring a common component type may also be analyzed over different time periods. Trends in the data such as changing rates of change associated with start-up or different points in the process may be identified. Correlation of trends and values for different sensors may be analyzed to identify those parameters whose short-term analysis might provide the best prediction regarding expected sensor performance. This information may be transmitted back to the monitoring device to update sensor models, sensor selection, sensor range, sensor scaling, sensor sampling frequency, types of data collected, and the like, and be analyzed locally or to influence the design of future monitoring devices.

**[0625]** In embodiments, the monitoring application **8150** may have access to equipment specifications, equipment geometry, component specifications, component materials, anticipated state information for a plurality of sensors, operational history, historical detection values, sensor life models, and the like for use analyzing the selected subset using rule-based or model-based analysis. The monitoring application **8150** may provide recommendations regarding sensor selection, additional data to collect, data to store with sensor data, and the like. The monitoring application **8150** may provide recommendations regarding scheduling repairs and/or maintenance. The monitoring application **8150** may provide recommendations regarding replacing a sensor. The replacement sensor may match the sensor being replaced or the replacement sensor may have a different range, sensitivity, sampling frequency, and the like.

**[0626]** In embodiments, the monitoring application **8150** may include a remote learning circuit structured to analyze sensor status data (e.g., sensor overload or sensor failure) together with data from other sensors, failure data on components being monitored, equipment being monitored, output being produced, and the like. The remote learning system may identify correlations between sensor overload and data from other sensors.

**[0627]** An example monitoring system for data collection in an industrial environment includes a data acquisition circuit that interprets a number of detection values, each of the detection values corresponding to input received from at least one of a number of input sensors, a MUX having inputs corresponding to a subset of the detection values, a MUX control circuit that interprets a subset of the number of detection values and provides the logical control of the MUX and the correspondence of MUX input and detected values as a result, where the logic control of the MUX includes adaptive scheduling of the select lines, a data analysis circuit that receives an output from the MUX and data corresponding to the logic control of the MUX resulting in a component health status, an analysis response circuit that performs an operation in response to the component health status, where the number of sensors includes at least two sensors such as a temperature sensor, a load sensor, a vibration sensor, an acoustic wave sensor, a heat flux sensor, an infrared sensor, an accelerometer, a tri-axial vibration sensor, and/or a tachometer. In certain further embodiments, an example system includes: where at least one of the number of detection values may correspond to a fusion of two or more input sensors representing a virtual sensor; where the system further includes a data storage circuit that stores at least one of component specifications and anticipated component state information and buffers a subset of the number of detection values for a predetermined length of time; where the system further includes a data storage circuit that stores at least one of a component specification and anticipated component state information and buffers the output of the MUX and data corresponding to the logic control of the MUX for a predetermined length of time; where the data analysis circuit includes a peak detection circuit, a phase detection circuit, a bandpass filter circuit, a frequency transformation circuit, a frequency analysis circuit, a PLL circuit, a torsional analysis circuit, and/or a bearing analysis circuit; where operation further includes storing additional data in the data storage circuit; where the operation includes at least one of enabling or disabling one or more portions of the MUX circuit; and/or where the operation includes causing the MUX control circuit to alter the logical control of the MUX and the correspondence of MUX input and detected values. In certain embodiments, the system includes at least two multiplexers; control of the correspondence of the multiplexer input and the detected values further includes controlling the connection of the output of a first multiplexer to an input of a second multiplexer; control of the correspondence of the multiplexer input and the detected values further comprises powering down at least a portion of one of the at least two multiplexers; and/or control of the correspondence of MUX input and detected values includes adaptive scheduling of the select lines. In certain embodiments, a data response circuit analyzes the stream of data from one or both MUXes, and recommends an action in response to the analysis.

**[0628]** An example testing system includes the testing system in communication with a number of analog and digital input sensors, a monitoring device including a data acquisition circuit that interprets a number of detection values, each of the number of detection values corresponding to at least one of the input sensors, a MUX having inputs corresponding to a subset of the detection values, a MUX control circuit that interprets a subset of the number of detection values and provides the logical control of the MUX and control of the correspondence of MUX input and detected values as a result, where the logic control of the

MUX includes adaptive scheduling of the select lines, and a user interface enabled to accept scheduling input for select lines and display output of MUX and select line data.

**[0629]** In embodiments, information about the health or other status or state information of or regarding a component or piece of industrial equipment may be obtained by looking at both the amplitude and phase or timing of data signals relative to related data signals, timers, reference signals or data measurements. An embodiment of a data monitoring device **8500** is shown in FIG. **59** and may include a plurality of sensors **8506** communicatively coupled to a controller **8502**. The controller **8502** may include a data acquisition circuit **8504**, a signal evaluation circuit **8508** and a response circuit **8510**. The plurality of sensors **8506** may be wired to ports on the data acquisition circuit **8504** or wirelessly in communication with the data acquisition circuit **8504**. The plurality of sensors **8506** may be wirelessly connected to the data acquisition circuit **8504**. The data acquisition circuit **8504** may be able to access detection values corresponding to the output of at least one of the plurality of sensors **8506** where the sensors **8506** may be capturing data on different operational aspects of a piece of equipment or an operating component.

**[0630]** The selection of the plurality of sensors **8506** for a data monitoring device **8500** designed for a specific component or piece of equipment may depend on a variety of considerations such as accessibility for installing new sensors, incorporation of sensors in the initial design, anticipated operational and failure conditions, reliability of the sensors, and the like. The impact of failure may drive the extent to which a component or piece of equipment is monitored with more sensors and/or higher capability sensors being dedicated to systems where unexpected or undetected failure would be costly or have severe consequences.

**[0631]** Depending on the type of equipment, the component being measured, the environment in which the equipment is operating and the like, sensors **8506** may comprise one or more of, without limitation, a vibration sensor, a thermometer, a hygrometer, a voltage sensor, a current sensor, an accelerometer, a velocity detector, a light or electromagnetic sensor (e.g., determining temperature, composition and/or spectral analysis, and/or object position or movement), an image sensor, a structured light sensor, a laser-based image sensor, an acoustic wave sensor, a displacement sensor, a turbidity meter, a viscosity meter, a load sensor, a tri-axial sensor, an accelerometer, a tachometer, a fluid pressure meter, an air flow meter, a horsepower meter, a flow rate meter, a fluid particle detector, an acoustical sensor, a pH sensor, and the like, including, without limitation, any of the sensors described throughout this disclosure and the documents incorporated by reference.

**[0632]** The sensors **8506** may provide a stream of data over time that has a phase component, such as relating to acceleration or vibration, allowing for the evaluation of phase or frequency analysis of different operational aspects of a piece of equipment or an operating component. The sensors **8506** may provide a stream of data that is not conventionally phase-based, such as temperature, humidity, load, and the like. The sensors **8506** may provide a continuous or near continuous stream of data over time, periodic readings, event-driven readings, and/or readings according to a selected interval or schedule.

**[0633]** In embodiments, as illustrated in FIG. **59**, the sensors **8506** may be part of the data monitoring device **8500**, referred to herein in some cases as a data collector, which in some cases may comprise a mobile or portable data collector. In embodiments, as illustrated in FIGS. **60** and **61**, sensors **8518**, either new or previously attached to or integrated into the equipment or component, may be opportunistically connected to or accessed by a monitoring device **8512**. The sensors **8518** may be directly connected to input ports **8520** on the data acquisition circuit **8516** of a controller **8514** or may be accessed by the data acquisition circuit **8516** wirelessly, such as by a reader, interrogator, or other wireless connection, such as over a short-distance wireless protocol. In embodiments, a data acquisition circuit **8516** may access detection values corresponding to the sensors **8518** wirelessly or via a separate source or some combination of these methods. In embodiments, the data acquisition circuit **8504** may include a wireless communications circuit **8522** able to wirelessly receive data opportunistically from sensors **8518** in the vicinity and route the data to the input ports **8520** on the data acquisition circuit **8516**.

**[0634]** In an embodiment, as illustrated in FIGS. **62** and **63**, the signal evaluation circuit **8508** may then process the detection values to obtain information about the component or piece of equipment being monitored. Information extracted by the signal evaluation circuit **8508** may comprise rotational speed, vibrational data including amplitudes, frequencies, phase, and/or acoustical data, and/or non-phase sensor data such as temperature, humidity, image data, and the like.

**[0635]** The signal evaluation circuit **8508** may include one or more components such as a phase detection circuit **8528** to determine a phase difference between two time-based signals, a phase lock loop circuit **8530** to adjust the relative phase of a signal such that it is aligned with a second signal, timer or reference signal, and/or a band pass filter circuit **8532** which may be used to separate out signals occurring at different frequencies. An example band pass filter circuit **8532** includes any filtering operations understood in the art, including at least a low-pass filter, a high-pass filter, and/or a band pass filter—for example to exclude or reduce frequencies that are not of interest for a particular determination, and/or to enhance the signal for frequencies of interest. Additionally, or alternatively, a band pass filter circuit **8532** includes one or more notch filters or other filtering mechanism to narrow ranges of frequencies (e.g., frequencies from a known source of noise). This may be used to filter out dominant frequency signals such as the overall rotation, and may help enable the evaluation of low amplitude signals at frequencies associated with torsion, bearing failure and the like.

**[0636]** In embodiments, understanding the relative differences may be enabled by a phase detection circuit **8528** to determine a phase difference between two signals. It may be of value to understand a relative phase offset, if any, between signals such as when a periodic vibration occurs relative to a relative rotation of a piece of equipment. In embodiments, there may be value in understanding where in a cycle shaft vibrations occur relative to a motor control input to better balance the control of the motor. This may be particularly true for systems and components that are operating at relative slow RPMs. Understanding of the phase difference between two signals or between those signals and a timer may enable establishing a relationship between a signal value and where it occurs in a process or rotation. Understanding relative phase differences may help in evaluating

the relationship between different components of a system such as in the creation of a vibrational model for an Operational Deflection Shape (ODS).

**[0637]** The signal evaluation circuit **8544** may perform frequency analysis using techniques such as a digital Fast Fourier transform (FFT), Laplace transform, Z-transform, wavelet transform, other frequency domain transform, or other digital or analog signal analysis techniques, including, without limitation, complex analysis, including complex phase evolution analysis. An overall rotational speed or tachometer may be derived from data from sensors such as rotational velocity meters, accelerometers, displacement meters and the like. Additional frequencies of interest may also be identified. These may include frequencies near the overall rotational speed as well as frequencies higher than that of the rotational speed. These may include frequencies that are nonsynchronous with an overall rotational speed. Signals observed at frequencies that are multiples of the rotational speed may be due to bearing induced vibrations or other behaviors or situations involving bearings. In some instances, these frequencies may be in the range of one times the rotational speed, two times the rotational speed, three times the rotational speed, and the like, up to 3.15 to 15 times the rotational speed, or higher. In some embodiments, the signal evaluation circuit **8544** may select RC components for a band pass filter circuit **8532** based on overall rotational speed to create a band pass filter circuit **8532** to remove signals at expected frequencies such as the overall rotational speed, to facilitate identification of small amplitude signals at other frequencies. In embodiments, variable components may be selected, such that adjustments may be made in keeping with changes in the rotational speed, so that the band pass filter may be a variable band pass filter. This may occur under control of automatically self-adjusting circuit elements, or under control of a processor, including automated control based on a model of the circuit behavior, where a rotational speed indicator or other data is provided as a basis for control.

**[0638]** In embodiments, rather than performing frequency analysis, the signal evaluation circuit **8544** may utilize the time-based detection values to perform transitory signal analysis. These may include identifying abrupt changes in signal amplitude including changes where the change in amplitude exceeds a predetermined value or exists for a certain duration. In embodiments, the time-based sensor data may be aligned with a timer or reference signal allowing the time-based sensor data to be aligned with, for example, a time or location in a cycle. Additional processing to look at frequency changes over time may include the use of Short-Time Fourier Transforms (STFT) or a wavelet transform.

**[0639]** In embodiments, frequency-based techniques and time-based techniques may be combined, such as using time-based techniques to determine discrete time periods during which given operational modes or states are occurring and using frequency-based techniques to determine behavior within one or more of the discrete time periods.

**[0640]** In embodiments, the signal evaluation circuit may utilize demodulation techniques for signals obtained from equipment running at slow speeds such as paper and pulp machines, mining equipment, and the like. A signal evaluation circuit employing a demodulation technique may comprise a band-pass filter circuit, a rectifier circuit, and/or a low pass circuit prior to transforming the data to the frequency domain.

**[0641]** The response circuit **8510 8710** may further comprise evaluating the results of the signal evaluation circuit **8508 8544** and, based on certain criteria, initiating an action. Criteria may include a predetermined maximum or minimum value for a detection value from a specific sensor, a value of a sensor's corresponding detection value over time, a change in value, a rate of change in value, and/or an accumulated value (e.g., a time spent above/below a threshold value, a weighted time spent above/below one or more threshold values, and/or an area of the detected value above/below one or more threshold values). The criteria may include a sensor's detection values at certain frequencies or phases where the frequencies or phases may be based on the equipment geometry, equipment control schemes, system input, historical data, current operating conditions, and/or an anticipated response. The criteria may comprise combinations of data from different sensors such as relative values, relative changes in value, relative rates of change in value, relative values over time, and the like. The relative criteria may change with other data or information such as process stage, type of product being processed, type of equipment, ambient temperature and humidity, external vibrations from other equipment, and the like. The relative criteria may include level of synchronicity with an overall rotational speed, such as to differentiate between vibration induced by bearings and vibrations resulting from the equipment design. In embodiments, the criteria may be reflected in one or more calculated statistics or metrics (including ones generated by further calculations on multiple criteria or statistics), which in turn may be used for processing (such as on board a data collector or by an external system), such as to be provided as an input to one or more of the machine learning capabilities described in this disclosure, to a control system (which may be an on-board data collector or remote, such as to control selection of data inputs, multiplexing of sensor data, storage, or the like), or as a data element that is an input to another system, such as a data stream or data package that may be available to a data marketplace, a SCADA system, a remote control system, a maintenance system, an analytic system, or other system.

**[0642]** In an illustrative and non-limiting example, an alert may be issued if the vibrational amplitude and/or frequency exceeds a predetermined maximum value, if there is a change or rate of change that exceeds a predetermined acceptable range, and/or if an accumulated value based on vibrational amplitude and/or frequency exceeds a threshold. Certain embodiments are described herein as detected values exceeding thresholds or predetermined values, but detected values may also fall below thresholds or predetermined values—for example where an amount of change in the detected value is expected to occur, but detected values indicate that the change may not have occurred. For example, and without limitation, vibrational data may indicate system agitation levels, properly operating equipment, or the like, and vibrational data below amplitude and/or frequency thresholds may be an indication of a process that is not operating according to expectations. Except where the context clearly indicates otherwise, any description herein describing a determination of a value above a threshold and/or exceeding a predetermined or expected value is understood to include determination of a value below a threshold and/or falling below a predetermined or expected value.

**[0643]** The predetermined acceptable range may be based on anticipated system response or vibration based on the equipment geometry and control scheme such as number of bearings, relative rotational speed, influx of power to the system at a certain frequency, and the like. The predetermined acceptable range may also be based on long term analysis of detection values across a plurality of similar equipment and components and correlation of data with equipment failure. Based on vibration phase information, a physical location of a problem may be identified. Based on the vibration phase information system design flaws, off-nominal operation, and/or component or process failures may be identified. In some embodiments, an alert may be issued based on changes or rates of change in the data over time such as increasing amplitude or shifts in the frequencies or phases at which a vibration occurs. In some embodiments, an alert may be issued based on accumulated values such as time spent over a threshold, weighted time spent over one or more thresholds, and/or an area of a curve of the detected value over one or more thresholds. In embodiments, an alert may be issued based on a combination of data from different sensors such as relative changes in value, or relative rates of change in amplitude, frequency of phase in addition to values of non-phase sensors such as temperature, humidity and the like. For example, an increase in temperature and energy at certain frequencies may indicate a hot bearing that is starting to fail. In embodiments, the relative criteria for an alarm may change with other data or information such as process stage, type of product being processed on equipment, ambient temperature and humidity, external vibrations from other equipment and the like.

**[0644]** In embodiments, response circuit **8510** may cause the data acquisition circuit **8504** to enable or disable the processing of detection values corresponding to certain sensors based on the some of the criteria discussed above. This may include switching to sensors having different response rates, sensitivity, ranges, and the like; accessing new sensors or types of sensors, and the like. Switching may be undertaken based on a model, a set of rules, or the like. In embodiments, switching may be under control of a machine learning system, such that switching is controlled based on one or more metrics of success, combined with input data, over a set of trials, which may occur under supervision of a human supervisor or under control of an automated system. Switching may involve switching from one input port to another (such as to switch from one sensor to another). Switching may involve altering the multiplexing of data, such as combining different streams under different circumstances. Switching may involve activating a system to obtain additional data, such as moving a mobile system (such as a robotic or drone system), to a location where different or additional data is available (such as positioning an image sensor for a different view or positioning a sonar sensor for a different direction of collection) or to a location where different sensors can be accessed (such as moving a collector to connect up to a sensor that is disposed at a location in an environment by a wired or wireless connection). The response circuit **8510** may make recommendations for the replacement of certain sensors in the future with sensors having different response rates, sensitivity, ranges, and the like. The response circuit **8510** may recommend design alterations for future embodiments of the component, the piece of equipment, the operating conditions, the process, and the like.

**[0645]** In embodiments, the response circuit **8510** may recommend maintenance at an upcoming process stop or initiate a maintenance call. The response circuit **8510** may recommend changes in process or operating parameters to remotely balance the piece of equipment. In embodiments, the response circuit **8510** may implement or recommend process changes—for example to lower the utilization of a component that is near a maintenance interval, operating off-nominally, or failed for purpose but still at least partially operational, to change the operating speed of a component (such as to put it in a lower-demand mode), to initiate amelioration of an issue (such as to signal for additional lubrication of a roller bearing set, or to signal for an alignment process for a system that is out of balance), and the like.

**[0646]** In embodiments, as shown in FIG. **64**, the data monitoring device **8540** may further comprise a data storage circuit **8542**, memory, and the like. The signal evaluation circuit **8544** may periodically store certain detection values to enable the tracking of component performance over time.

**[0647]** In embodiments, based on relevant operating conditions and/or failure modes which may occur in as sensor values approach one or more criteria, the signal evaluation circuit **8544** may store data in the data storage circuit **8542** based on the fit of data relative to one or more criteria, such as those described throughout this disclosure. Based on one sensor input meeting or approaching specified criteria or range, the signal evaluation circuit **8544** may store additional data such as RPMs, component loads, temperatures, pressures, vibrations or other sensor data of the types described throughout this disclosure. The signal evaluation circuit **8544** may store data at a higher data rate for greater granularity in future processing, the ability to reprocess at different sampling rates, and/or to enable diagnosing or post-processing of system information where operational data of interest is flagged, and the like.

**[0648]** In embodiments, as shown in FIG. **65**, a data monitoring system **8546** may comprise at least one data monitoring device **8548**. The at least one data monitoring device **8548** comprising sensors **8506**, a controller **8550** comprising a data acquisition circuit **8504**, a signal evaluation circuit **8538**, a data storage circuit **8542**, and a communications circuit **8552** to allow data and analysis to be transmitted to a monitoring application **8556** on a remote server **8554**. The signal evaluation circuit **8538** may comprise at least one of a phase detection circuit **8528**, a phase lock loop circuit **8530**, and/or a band pass circuit **8532**. The signal evaluation circuit **8538** may periodically share data with the communication circuit **8552** for transmittal to the remote server **8554** to enable the tracking of component and equipment performance over time and under varying conditions by a monitoring application **8556**. Because relevant operating conditions and/or failure modes may occur as sensor values approach one or more criteria, the signal evaluation circuit **8538** may share data with the communication circuit **8552** for transmittal to the remote server **8554** based on the fit of data relative to one or more criteria. Based on one sensor input meeting or approaching specified criteria or range, the signal evaluation circuit **8538** may share additional data such as RPMs, component loads, temperatures, pressures, vibrations, and the like for transmittal. The signal evaluation circuit **8538** may share data at a higher data rate for transmittal to enable greater granularity in processing on the remote server.

**[0649]** In embodiments, as illustrated in FIG. **66**, a data collection system **8560** may have a plurality of monitoring devices **8558** collecting data on multiple components in a single piece of equipment, collecting data on the same component across a plurality of pieces of equipment (both the same and different types of equipment) in the same facility, as well as collecting data from monitoring devices in multiple facilities. A monitoring application on a remote server may receive and store the data coming from a plurality of the various monitoring devices. The monitoring application may then select subsets of data which may be jointly analyzed. Subsets of monitoring data may be selected based on data from a single type of component or data from a single type of equipment in which the component is operating. Monitoring data may be selected or grouped based on common operating conditions such as size of load, operational condition (e.g., intermittent, continuous), operating speed or tachometer, common ambient environmental conditions such as humidity, temperature, air or fluid particulate, and the like. Monitoring data may be selected based on the effects of other nearby equipment, such as nearby machines rotating at similar frequencies, nearby equipment producing electromagnetic fields, nearby equipment producing heat, nearby equipment inducing movement or vibration, nearby equipment emitting vapors, chemicals or particulates, or other potentially interfering or intervening effects.

**[0650]** The monitoring application may then analyze the selected data set. For example, data from a single component may be analyzed over different time periods such as one operating cycle, several operating cycles, a month, a year, or the like. Data from multiple components of the same type may also be analyzed over different time periods. Trends in the data such as changes in frequency or amplitude may be correlated with failure and maintenance records associated with the same component or piece of equipment. Trends in the data such as changing rates of change associated with start-up or different points in the process may be identified. Additional data may be introduced into the analysis such as output product quality, output quantity (such as per unit of time), indicated success or failure of a process, and the like. Correlation of trends and values for different types of data may be analyzed to identify those parameters whose short-term analysis might provide the best prediction regarding expected performance. This information may be transmitted back to the monitoring device to update types of data collected and analyzed locally or to influence the design of future monitoring devices.

**[0651]** In an illustrative and non-limiting example, the monitoring device may be used to collect and process sensor data to measure mechanical torque. The monitoring device may be in communication with or include a high resolution, high speed vibration sensor to collect data over an extended period of time, enough to measure multiple cycles of rotation. For gear driven equipment, the sampling resolution should be such that the number of samples taken per cycle is at least equal to the number of gear teeth driving the component. It will be understood that a lower sampling resolution may also be utilized, which may result in a lower confidence determination and/or taking data over a longer period of time to develop sufficient statistical confidence. This data may then be used in the generation of a phase reference (relative probe) or tachometer signal for a piece of equipment. This phase reference may be used to align phase data such as vibrational data or acceleration data from multiple sensors located at different positions on a component or on different components within a system. This information may facilitate the determination of torque for different components or the generation of an Operational Deflection Shape (ODS), indicating the extent of mechanical deflection of one or more components during an operational mode, which in turn may be used to measure mechanical torque in the component.

**[0652]** The higher resolution data stream may provide additional data for the detection of transitory signals in low speed operations. The identification of transitory signals may enable the identification of defects in a piece of equipment or component

**[0653]** In an illustrative and non-limiting example, the monitoring device may be used to identify mechanical jitter for use in failure prediction models. The monitoring device may begin acquiring data when the piece of equipment starts up through ramping up to operating speed and then during operation. Once at operating speed, it is anticipated that the torsional jitter should be minimal and changes in torsion during this phase may be indicative of cracks, bearing faults and the like. Additionally, known torsions may be removed from the signal to facilitate in the identification of unanticipated torsions resulting from system design flaws or component wear. Having phase information associated with the data collected at operating speed may facilitate identification of a location of vibration and potential component wear. Relative phase information for a plurality of sensors located throughout a machine may facilitate the evaluation of torsion as it is propagated through a piece of equipment.

**[0654]** An example system data collection in an industrial environment includes a data acquisition circuit that interprets a number of detection values from a number of input sensors communicatively coupled to the data acquisition circuit, each of the number of detection values corresponding to at least one of the input sensors, a signal evaluation circuit that obtains at least one of a vibration amplitude, a vibration frequency and a vibration phase location corresponding to at least one of the input sensors in response to the number of detection values, and a response circuit that performs at least one operation in response to at the at least one of the vibration amplitude, the vibration frequency and the vibration phase location. Certain further embodiments of an example system include: where the signal evaluation circuit includes a phase detection circuit, or a phase detection circuit and a phase lock loop circuit and/or a band pass filter; where the number of input sensors includes at least two input sensors providing phase information and at least one input sensor providing non-phase sensor information; the signal evaluation circuit further aligning the phase information provided by the at least two of the input sensors; where the at least one operation is further in response to at least one of: a change in magnitude of the vibration amplitude; a change in frequency or phase of vibration; a rate of change in at least one of vibration amplitude, vibration frequency and vibration phase; a relative change in value between at least two of vibration amplitude, vibration frequency and vibration phase; and/or a relative rate of change between at least two of vibration amplitude, vibration frequency, and vibration phase; the system further including an alert circuit, where the at least one operation includes providing an alert and where the alert may be one of haptic, audible and visual; a data storage circuit, where at least one of the vibration amplitude, vibration frequency, and vibra-

tion phase is stored periodically to create a vibration history, and where the at least one operation includes storing additional data in the data storage circuit (e.g., as a vibration fingerprint for a component); where the storing additional data in the data storage circuit is further in response to at least one of: a change in magnitude of the vibration amplitude; a change in frequency or phase of vibration; a rate of change in the vibration amplitude, frequency or phase; a relative change in value between at least two of vibration amplitude, frequency and phase; and a relative rate of change between at least two of vibration amplitude, frequency and phase; the system further comprising at least one of a multiplexing (MUX) circuit whereby alternative combinations of detection values may be selected based on at least one of user input, a detected state, and a selected operating parameter for a machine; where each of the number of detection values corresponds to at least one of the input sensors; where the at least one operation includes enabling or disabling the connection of one or more portions of the multiplexing circuit; a MUX control circuit that interprets a subset of the number of detection values and provides the logical control of the MUX and the correspondence of MUX input and detected values as a result; and/or where the logic control of the MUX includes adaptive scheduling of the select lines.

**[0655]** An example method of monitoring a component, includes receiving time-based data from at least one sensor, phase-locking the received data with a reference signal, transforming the received time-based data to frequency data, filtering the frequency data to remove tachometer frequencies, identifying low amplitude signals occurring at high frequencies, and activating an alarm if a low amplitude signal exceeds a threshold.

**[0656]** An example system for data collection, processing, and utilization of signals in an industrial environment includes a plurality of monitoring devices, each monitoring device comprising a data acquisition circuit structured to interpret a plurality of detection values from a plurality of input sensors communicatively coupled to the data acquisition circuit, each of the plurality of detection values corresponding to at least one of the input sensors; a signal evaluation circuit structured to obtain at least one of vibration amplitude, vibration frequency and a vibration phase location corresponding to at least one of the input sensors in response to the corresponding at least one of the plurality of detection values; a data storage facility for storing a subset of the plurality of detection values; a communication circuit structured to communicate at least one selected detection value to a remote server; and a monitoring application on the remote server structured to: receive the at least one selected detection value; jointly analyze a subset of the detection values received from the plurality of monitoring devices; and recommend an action.

**[0657]** In certain further embodiments, an example system includes: for each monitoring device, the plurality of input sensors include at least one input sensor providing phase information and at least one input sensor providing non-phase input sensor information and where joint analysis includes using the phase information from the plurality of monitoring devices to align the information from the plurality of monitoring devices; where the subset of detection values is selected based on data associated with a detection value including at least one: common type of component, common type of equipment, and common operating conditions and further selected based on one of anticipated life of a component associated with detection values, type of the equipment associated with detection values, and operational conditions under which detection values were measured; and/or where the analysis of the subset of detection values includes feeding a neural net with the subset of detection values and supplemental information to learn to recognize various operating states, health states, life expectancies and fault states utilizing deep learning techniques, wherein the supplemental information comprises one of component specification, component performance, equipment specification, equipment performance, maintenance records, repair records and an anticipated state model.

**[0658]** An example system for data collection in an industrial environment includes a data acquisition circuit structured to interpret a plurality of detection values from a plurality of input sensors communicatively coupled to the data acquisition circuit, each of the plurality of detection values corresponding to at least one of the input sensors; a signal evaluation circuit structured to obtain at least one of vibration amplitude, vibration frequency and vibration phase location corresponding to at least one of the input sensors in response to the corresponding at least one of a plurality of detection values; a multiplexing circuit whereby alternative combinations of the detection values may be selected based on at least one of user input, a detected state and a selected operating parameter for a machine, each of the plurality of detection values corresponding to at least one of the input sensors; and a response circuit structured to perform at least one operation in response to at the at least one of the vibration amplitude, vibration frequency and vibration phase location.

**[0659]** An example system for data collection in a piece of equipment, includes a data acquisition circuit structured to interpret a plurality of detection values from a plurality of input sensors communicatively coupled to the data acquisition circuit, each of the plurality of detection values corresponding to at least one of the input sensors; a timer circuit structured to generate a timing signal based on a first detected value of the plurality of detection values; a signal evaluation circuit structured to obtain at least one of vibration amplitude, vibration frequency and vibration phase location corresponding to a second detected value comprising: a phase detection circuit structured to determine a relative phase difference between a second detection value of the plurality of detection values and the timing signal; and a response circuit structured to perform at least one operation in response to at the at least one of the vibration amplitude, vibration frequency and vibration phase location.

**[0660]** An example system for bearing analysis in an industrial environment, includes a data acquisition circuit structured to interpret a plurality of detection values from a plurality of input sensors communicatively coupled to the data acquisition circuit, each of the plurality of detection values corresponding to at least one of the input sensors; a data storage for storing specifications and anticipated state information for a plurality of bearing types and buffering the plurality of detection values for a predetermined length of time; a timer circuit structured to generate a timing signal based on a first detected value of the plurality of detection values; a bearing analysis circuit structured to analyze buffered detection values relative to specifications and anticipated state information resulting in a life prediction comprising: a phase detection circuit structured to determine

a relative phase difference between a second detection value of the plurality of detection values and the timing signal; and a signal evaluation circuit structured to obtain at least one of vibration amplitude, vibration frequency and vibration phase location corresponding to a second detected value: and a response circuit structured to perform at least one operation in response to at the at least one of the vibration amplitude, vibration frequency and vibration phase location.

**[0661]** An example motor monitoring system includes: a data acquisition circuit structured to interpret a plurality of detection values from a plurality of input sensors communicatively coupled to the data acquisition circuit, each of the plurality of detection values corresponding to at least one of the input sensors; a data storage circuit structured to store specifications, system geometry, and anticipated state information for the motor and motor components, store historical motor performance and buffer the plurality of detection values for a predetermined length of time; a timer circuit structured to generate a timing signal based on a first detected value of the plurality of detection values; a motor analysis circuit structured to analyze buffered detection values relative to specifications and anticipated state information resulting in a motor performance parameter comprising: a phase detection circuit structured to determine a relative phase difference between a second detection value of the plurality of detection values and the timing signal; and a signal evaluation circuit structured to obtain at least one of vibration amplitude, vibration frequency and vibration phase location corresponding to a second detected value and analyze the at least one of vibration amplitude, vibration frequency and vibration phase location relative to buffered detection values, specifications and anticipated state information resulting in a motor performance parameter; and a response circuit structured to perform at least one operation in response to at the at least one of vibration amplitude, vibration frequency and vibration phase location and motor performance parameter.

**[0662]** An example system for estimating a vehicle steering system performance parameter, includes: a data acquisition circuit structured to interpret a plurality of detection values from a plurality of input sensors communicatively coupled to the data acquisition circuit, each of the plurality of detection values corresponding to at least one of the input sensors; a data storage circuit structured to store specifications, system geometry, and anticipated state information for the vehicle steering system, the rack, the pinion, and the steering column, store historical steering system performance and buffer the plurality of detection values for a predetermined length of time;

a timer circuit structured to generate a timing signal based on a first detected value of the plurality of detection values; a steering system analysis circuit structured to analyze buffered detection values relative to specifications and anticipated state information resulting in a steering system performance parameter comprising: a phase detection circuit structured to determine a relative phase difference between a second detection value of the plurality of detection values and the timing signal; and a signal evaluation circuit structured to obtain at least one of vibration amplitude, vibration frequency and vibration phase location corresponding to a second detected value and analyze the at least one of vibration amplitude, vibration frequency and vibration phase location relative to buffered detection values, specifications and anticipated state information resulting in a steering system performance parameter; and a response circuit structured to perform at least one operation in response to at the at least one of vibration amplitude, vibration frequency and vibration phase location and the steering system performance parameter.

**[0663]** An example system for estimating a health parameter a pump performance parameter includes a data acquisition circuit structured to interpret a plurality of detection values from a plurality of input sensors communicatively coupled to the data acquisition circuit, each of the plurality of detection values corresponding to at least one of the input sensors; a data storage circuit structured to store specifications, system geometry, and anticipated state information for the pump and pump components associated with the detection values, store historical pump performance and buffer the plurality of detection values for a predetermined length of time; a timer circuit structured to generate a timing signal based on a first detected value of the plurality of detection values; a pump analysis circuit structured to analyze buffered detection values relative to specifications and anticipated state information resulting in a pump performance parameter comprising: a phase detection circuit structured to determine a relative phase difference between a second detection value of the plurality of detection values and the timing signal; and a signal evaluation circuit structured to obtain at least one of vibration amplitude, vibration frequency and vibration phase location corresponding to a second detected value and analyze the at least one of vibration amplitude, vibration frequency and vibration phase location relative to buffered detection values, specifications and anticipated state information resulting in a pump performance parameter; and a response circuit structured to perform at least one operation in response to at the at least one of vibration amplitude, vibration frequency and vibration phase location and the pump performance parameter, wherein the pump is one of a water pump in a car and a mineral pump.

**[0664]** An example system for estimating a drill performance parameter for a drilling machine, includes: a data acquisition circuit structured to interpret a plurality of detection values from a plurality of input sensors communicatively coupled to the data acquisition circuit, each of the plurality of detection values corresponding to at least one of the input sensors; a data storage circuit structured to store specifications, system geometry, and anticipated state information for the drill and drill components associated with the detection values, store historical drill performance and buffer the plurality of detection values for a predetermined length of time; a timer circuit structured to generate a timing signal based on a first detected value of the plurality of detection values; a drill analysis circuit structured to analyze buffered detection values relative to specifications and anticipated state information resulting in a drill performance parameter comprising: a phase detection circuit structured to determine a relative phase difference between a second detection value of the plurality of detection values and the timing signal; and a signal evaluation circuit structured to obtain at least one of vibration amplitude, vibration frequency and vibration phase location corresponding to a second detected value and analyze the at least one of vibration amplitude, vibration frequency and vibration phase location relative to buffered detection values, specifications and anticipated state information resulting in a drill performance parameter; and a response circuit structured to per-

form at least one operation in response to at the at least one of vibration amplitude, vibration frequency and vibration phase location and the drill performance parameter, wherein the drilling machine is one of an oil drilling machine and a gas drilling machine.

**[0665]** An example system for estimating a conveyor health parameter, includes: a data acquisition circuit structured to interpret a plurality of detection values from a plurality of input sensors communicatively coupled to the data acquisition circuit, each of the plurality of detection values corresponding to at least one of the input sensors; a data storage circuit structured to store specifications, system geometry, and anticipated state information for a conveyor and conveyor components associated with the detection values, store historical conveyor performance and buffer the plurality of detection values for a predetermined length of time; a timer circuit structured to generate a timing signal based on a first detected value of the plurality of detection values; a conveyor analysis circuit structured to analyze buffered detection values relative to specifications and anticipated state information resulting in a conveyor performance parameter comprising: a phase detection circuit structured to determine a relative phase difference between a second detection value of the plurality of detection values and the timing signal; and a signal evaluation circuit structured to obtain at least one of vibration amplitude, vibration frequency and vibration phase location corresponding to a second detected value and analyze the at least one of vibration amplitude, vibration frequency and vibration phase location relative to buffered detection values, specifications and anticipated state information resulting in a conveyor performance parameter; and a response circuit structured to perform at least one operation in response to at the at least one of vibration amplitude, vibration frequency and vibration phase location and the conveyor performance parameter.

**[0666]** An example system for estimating an agitator health parameter, includes: a data acquisition circuit structured to interpret a plurality of detection values from a plurality of input sensors communicatively coupled to the data acquisition circuit, each of the plurality of detection values corresponding to at least one of the input sensors; a data storage circuit structured to store specifications, system geometry, and anticipated state information for an agitator and agitator components associated with the detection values, store historical agitator performance and buffer the plurality of detection values for a predetermined length of time; a timer circuit structured to generate a timing signal based on a first detected value of the plurality of detection values; an agitator analysis circuit structured to analyze buffered detection values relative to specifications and anticipated state information resulting in an agitator performance parameter comprising: a phase detection circuit structured to determine a relative phase difference between a second detection value of the plurality of detection values and the timing signal; and a signal evaluation circuit structured to obtain at least one of vibration amplitude, vibration frequency and vibration phase location corresponding to a second detected value and analyze the at least one of vibration amplitude, vibration frequency and vibration phase location relative to buffered detection values, specifications and anticipated state information resulting in an agitator performance parameter; and a response circuit structured to perform at least one operation in response to at the at least one of vibration amplitude, vibration frequency and vibration phase location and the agitator performance parameter, wherein the agitator is one of a rotating tank mixer, a large tank mixer, a portable tank mixers, a tote tank mixer, a drum mixer, a mounted mixer and a propeller mixer.

**[0667]** An example system for estimating a compressor health parameter, includes: a data acquisition circuit structured to interpret a plurality of detection values from a plurality of input sensors communicatively coupled to the data acquisition circuit, each of the plurality of detection values corresponding to at least one of the input sensors; a data storage circuit structured to store specifications, system geometry, and anticipated state information for a compressor and compressor components associated with the detection values, store historical compressor performance and buffer the plurality of detection values for a predetermined length of time; a timer circuit structured to generate a timing signal based on a first detected value of the plurality of detection values; a compressor analysis circuit structured to analyze buffered detection values relative to specifications and anticipated state information resulting in a compressor performance parameter comprising: a phase detection circuit structured to determine a relative phase difference between a second detection value of the plurality of detection values and the timing signal; and a signal evaluation circuit structured to obtain at least one of vibration amplitude, vibration frequency and vibration phase location corresponding to a second detected value and analyze the at least one of vibration amplitude, vibration frequency and vibration phase location relative to buffered detection values, specifications and anticipated state information resulting in a compressor performance parameter; and a response circuit structured to perform at least one operation in response to at the at least one of vibration amplitude, vibration frequency and vibration phase location and the compressor performance parameter.

**[0668]** An example system for estimating an air conditioner health parameter, includes: a data acquisition circuit structured to interpret a plurality of detection values from a plurality of input sensors communicatively coupled to the data acquisition circuit, each of the plurality of detection values corresponding to at least one of the input sensors; a data storage circuit structured to store specifications, system geometry, and anticipated state information for an air conditioner and air conditioner components associated with the detection values, store historical air conditioner performance and buffer the plurality of detection values for a predetermined length of time; a timer circuit structured to generate a timing signal based on a first detected value of the plurality of detection values; an air conditioner analysis circuit structured to analyze buffered detection values relative to specifications and anticipated state information resulting in an air conditioner performance parameter comprising: a phase detection circuit structured to determine a relative phase difference between a second detection value of the plurality of detection values and the timing signal; and a signal evaluation circuit structured to obtain at least one of vibration amplitude, vibration frequency and vibration phase location corresponding to a second detected value and analyze the at least one of vibration amplitude, vibration frequency and vibration phase location relative to buffered detection values, specifications and anticipated state information resulting in an air conditioner performance parameter; and a response circuit structured to perform at least one

operation in response to at the at least one of vibration amplitude, vibration frequency and vibration phase location and the air conditioner performance parameter.

**[0669]** An example system for estimating a centrifuge health parameter, includes: a data acquisition circuit structured to interpret a plurality of detection values from a plurality of input sensors communicatively coupled to the data acquisition circuit, each of the plurality of detection values corresponding to at least one of the input sensors; a data storage circuit structured to store specifications, system geometry, and anticipated state information for a centrifuge and centrifuge components associated with the detection values, store historical centrifuge performance and buffer the plurality of detection values for a predetermined length of time; a timer circuit structured to generate a timing signal based on a first detected value of the plurality of detection values; a centrifuge analysis circuit structured to analyze buffered detection values relative to specifications and anticipated state information resulting in a centrifuge performance parameter comprising: a phase detection circuit structured to determine a relative phase difference between a second detection value of the plurality of detection values and the timing signal; and a signal evaluation circuit structured to obtain at least one of vibration amplitude, vibration frequency and vibration phase location corresponding to a second detected value and analyze the at least one of vibration amplitude, vibration frequency and vibration phase location relative to buffered detection values, specifications and anticipated state information resulting in a centrifuge performance parameter; and a response circuit structured to perform at least one operation in response to at the at least one of vibration amplitude, vibration frequency and vibration phase location and the centrifuge performance parameter.

**[0670]** In embodiments, information about the health of a component or piece of industrial equipment may be obtained by comparing the values of multiple signals at the same point in a process. This may be accomplished by aligning a signal relative to other related data signals, timers, or reference signals. An embodiment of a data monitoring device **8700**, **8718** is shown in FIGS. **67-69** and may include a controller **8702**, **8720**. The controller may include a data acquisition circuit **8704**, **8722**, a signal evaluation circuit **8708**, a data storage circuit **8716** and an optional response circuit **8710**. The signal evaluation circuit **8708** may comprise a timer circuit **8714** and, optionally, a phase detection circuit **8712**.

**[0671]** The data monitoring device may include a plurality of sensors **8706** communicatively coupled to a controller **8702**. The plurality of sensors **8706** may be wired to ports on the data acquisition circuit **8704**. The plurality of sensors **8706** may be wirelessly connected to the data acquisition circuit **8704** which may be able to access detection values corresponding to the output of at least one of the plurality of sensors **8706** where the sensors **8706** may be capturing data on different operational aspects of a piece of equipment or an operating component. In embodiments, as illustrated in FIGS. **68** and **69**, one or more external sensors **8724** which are not explicitly part of a monitoring device **8718** may be opportunistically connected to or accessed by the monitoring device **8718**. The data acquisition circuit **8722** may include one or more input ports **8726**. The one or more external sensors **8724** may be directly connected to the one or more input ports **8726** on the data acquisition circuit **8722** of the controller **8720**. In embodiments, as shown in FIG. **69**, a data acquisition circuit **8722** may further comprise a wireless communications circuit **8728** to access detection values corresponding to the one or more external sensors **8724** wirelessly or via a separate source or some combination of these methods.

**[0672]** The selection of the plurality of sensors **8706 8724** for connection to a data monitoring device **8700 8718** designed for a specific component or piece of equipment may depend on a variety of considerations such as accessibility for installing new sensors, incorporation of sensors in the initial design, anticipated operational and failure conditions, resolution desired at various positions in a process or plant, reliability of the sensors, and the like. The impact of a failure, time response of a failure (e.g., warning time and/or off-nominal modes occurring before failure), likelihood of failure, and/or sensitivity required and/or difficulty to detect failed conditions may drive the extent to which a component or piece of equipment is monitored with more sensors and/or higher capability sensors being dedicated to systems where unexpected or undetected failure would be costly or have severe consequences.

**[0673]** The signal evaluation circuit **8708** may process the detection values to obtain information about a component or piece of equipment being monitored. Information extracted by the signal evaluation circuit **8708** may comprise information regarding what point or time in a process corresponds with a detection value where the point in time is based on a timing signal generated by the timer circuit **8714**. The start of the timing signal may be generated by detecting an edge of a control signal such as a rising edge, falling edge or both where the control signal may be associated with the start of a process. The start of the timing signal may be triggered by an initial movement of a component or piece of equipment. The start of the timing signal may be triggered by an initial flow through a pipe or opening or by a flow achieving a predetermined rate. The start of the timing signal may be triggered by a state value indicating a process has commenced—for example the state of a switch, button, data value provided to indicate the process has commenced, or the like. Information extracted may comprise information regarding a difference in phase, determined by the phase detection circuit **8712**, between a stream of detection value and the time signal generated by the timer circuit **8714**. Information extracted may comprise information regarding a difference in phase between one stream of detection values and a second stream of detection values where the first stream of detection values is used as a basis or trigger for a timing signal generated by the timer circuit.

**[0674]** Depending on the type of equipment, the component being measured, the environment in which the equipment is operating and the like, sensors **8706 8724** may comprise one or more of, without limitation, a thermometer, a hygrometer, a voltage sensor, a current sensor, an accelerometer, a velocity detector, a light or electromagnetic sensor (e.g., determining temperature, composition and/or spectral analysis, and/or object position or movement), an image sensor, a displacement sensor, a turbidity meter, a viscosity meter, a load sensor, a tri-axial sensor, a tachometer, a fluid pressure meter, an air flow meter, a horsepower meter, a flow rate meter, a fluid particle detector, an acoustical sensor, a pH sensor, and the like.

**[0675]** The sensors **8706 8724** may provide a stream of data over time that has a phase component, such as accel-

eration or vibration, allowing for the evaluation of phase or frequency analysis of different operational aspects of a piece of equipment or an operating component. The sensors **8706** **8724** may provide a stream of data that is not phase based such as temperature, humidity, load, and the like. The sensors **8706** **8724** may provide a continuous or near continuous stream of data over time, periodic readings, event-driven readings, and/or readings according to a selected interval or schedule.

**[0676]** In embodiments, as illustrated in FIGS. **70** and **71**, the data acquisition circuit **8734** may further comprise a multiplexer circuit **8736** as described elsewhere herein. Outputs from the multiplexer circuit **8736** may be utilized by the signal evaluation circuit **8708**. The response circuit **8710** may have the ability to turn on and off portions of the multiplexer circuit **8736**. The response circuit **8710** may have the ability to control the control channels of the multiplexer circuit **8736**

**[0677]** The response circuit **8710** may further comprise evaluating the results of the signal evaluation circuit **8708** and, based on certain criteria, initiating an action. The criteria may include a sensor's detection values at certain frequencies or phases relative to the timer signal where the frequencies or phases of interest may be based on the equipment geometry, equipment control schemes, system input, historical data, current operating conditions, and/or an anticipated response. Criteria may include a predetermined maximum or minimum value for a detection value from a specific sensor, a cumulative value of a sensor's corresponding detection value over time, a change in value, a rate of change in value, and/or an accumulated value (e.g., a time spent above/below a threshold value, a weighted time spent above/below one or more threshold values, and/or an area of the detected value above/below one or more threshold values). The criteria may comprise combinations of data from different sensors such as relative values, relative changes in value, relative rates of change in value, relative values over time, and the like. The relative criteria may change with other data or information such as process stage, type of product being processed, type of equipment, ambient temperature and humidity, external vibrations from other equipment, and the like.

**[0678]** Certain embodiments are described herein as detected values exceeding thresholds or predetermined values, but detected values may also fall below thresholds or predetermined values—for example where an amount of change in the detected value is expected to occur, but detected values indicate that the change may not have occurred. For example, and without limitation, vibrational data may indicate system agitation levels, properly operating equipment, or the like, and vibrational data below amplitude and/or frequency thresholds may be an indication of a process that is not operating according to expectations. Except where the context clearly indicates otherwise, any description herein describing a determination of a value above a threshold and/or exceeding a predetermined or expected value is understood to include determination of a value below a threshold and/or falling below a predetermined or expected value.

**[0679]** The predetermined acceptable range may be based on anticipated system response or vibration based on the equipment geometry and control scheme such as number of bearings, relative rotational speed, influx of power to the system at a certain frequency, and the like. The predetermined acceptable range may also be based on long term analysis of detection values across a plurality of similar equipment and components and correlation of data with equipment failure.

**[0680]** In some embodiments, an alert may be issued based on the some of the criteria discussed above. In an illustrative example, an increase in temperature and energy at certain frequencies may indicate a hot bearing that is starting to fail. In embodiments, the relative criteria for an alarm may change with other data or information such as process stage, type of product being processed on equipment, ambient temperature and humidity, external vibrations from other equipment and the like. In an illustrative and non-limiting example, the response circuit **8710** may initiate an alert if a vibrational amplitude and/or frequency exceeds a predetermined maximum value, if there is a change or rate of change that exceeds a predetermined acceptable range, and/or if an accumulated value based on vibrational amplitude and/or frequency exceeds a threshold.

**[0681]** In embodiments, response circuit **8710** may cause the data acquisition circuit **8704** to enable or disable the processing of detection values corresponding to certain sensors based on the some of the criteria discussed above. This may include switching to sensors having different response rates, sensitivity, ranges, and the like; accessing new sensors or types of sensors, and the like. This switching may be implemented by changing the control signals for a multiplexer circuit **8736** and/or by turning on or off certain input sections of the multiplexer circuit **8736**. The response circuit **8710** may make recommendations for the replacement of certain sensors in the future with sensors having different response rates, sensitivity, ranges, and the like. The response circuit **8710** may recommend design alterations for future embodiments of the component, the piece of equipment, the operating conditions, the process, and the like.

**[0682]** In embodiments, the response circuit **8710** may recommend maintenance at an upcoming process stop or initiate a maintenance call. The response circuit **8710** may recommend changes in process or operating parameters to remotely balance the piece of equipment. In embodiments, the response circuit **8710** may implement or recommend process changes—for example to lower the utilization of a component that is near a maintenance interval, operating off-nominally, or failed for purpose but still at least partially operational. In an illustrative example, vibration phase information, derived by the phase detection circuit **8712** relative to a timer signal from the timer circuit **8714**, may be indicative of a physical location of a problem. Based on the vibration phase information, system design flaws, off-nominal operation, and/or component or process failures may be identified.

**[0683]** In embodiments, based on relevant operating conditions and/or failure modes which may occur in as sensor values approach one or more criteria, the signal evaluation circuit **8708** may store data in the data storage circuit **8716** based on the fit of data relative to one or more criteria. Based on one sensor input meeting or approaching specified criteria or range, the signal evaluation circuit **8708** may store additional data such as RPMs, component loads, temperatures, pressures, vibrations in the data storage circuit **8716**. The signal evaluation circuit **8708** may store data at a higher data rate for greater granularity in future processing, the ability to reprocess at different sampling rates, and/or to

enable diagnosing or post-processing of system information where operational data of interest is flagged, and the like.

**[0684]** In embodiments, as shown in FIGS. **72** and **73** and **74** and **75**, a data monitoring system **8762** may include at least one data monitoring device **8768**. The at least one data monitoring device **8768** may include sensors **8706** and a controller **8770** comprising a data acquisition circuit **8704**, a signal evaluation circuit **8772**, a data storage circuit **8742**, and a communications circuit **8752** to allow data and analysis to be transmitted to a monitoring application **8776** on a remote server **8774**. The signal evaluation circuit **8772** may include at least one of a phase detection circuit **8712** and a timer circuit **8714**. The signal evaluation circuit **8772** may periodically share data with the communication circuit **8752** for transmittal to the remote server **8774** to enable the tracking of component and equipment performance over time and under varying conditions by a monitoring application **8776**. Because relevant operating conditions and/or failure modes may occur as sensor values approach one or more criteria, the signal evaluation circuit **8708** may share data with the communication circuit **8752** for transmittal to the remote server **8774** based on the fit of data relative to one or more criteria. Based on one sensor input meeting or approaching specified criteria or range, the signal evaluation circuit **8708** may share additional data such as RPMs, component loads, temperatures, pressures, vibrations, and the like for transmittal. The signal evaluation circuit **8772** may share data at a higher data rate for transmittal to enable greater granularity in processing on the remote server.

**[0685]** In embodiments, as shown in FIG. **72**, the communications circuit **8752** may communicated data directly to a remote server **8774**. In embodiments, as shown in FIG. **73**, the communications circuit **8752** may communicate data to an intermediate computer **8754** which may include a processor **8756** running an operating system **8758** and a data storage circuit **8760**. The intermediate computer **8754** may collect data from a plurality of data monitoring devices and send the cumulative data to the remote server **8774**.

**[0686]** In embodiments as illustrated in FIGS. **74** and **75**, a data collection system **8762** may have a plurality of monitoring devices **8768** collecting data on multiple components in a single piece of equipment, collecting data on the same component across a plurality of pieces of equipment, (both the same and different types of equipment) in the same facility as well as collecting data from monitoring devices in multiple facilities. In embodiments, as show in FIG. **74** the communications circuit **8752** may communicated data directly to a remote server **8774**. In embodiments, as shown in FIG. **75**, the communications circuit **8752** may communicate data to an intermediate computer **8754** which may include a processor **8756** running an operating system **8758** and a data storage circuit **8760**. The intermediate computer **8754** may collect data from a plurality of data monitoring devices and send the cumulative data to the remote server **8774**.

**[0687]** In embodiments, a monitoring application **8776** on a remote server **8774** may receive and store one or more of detection values, timing signals and data coming from a plurality of the various monitoring devices **8768**. The monitoring application **8776** may then select subsets of the detection values, timing signals and data to be jointly analyzed. Subsets for analysis may be selected based on a single type of component or a single type of equipment in which a component is operating. Subsets for analysis may be selected or grouped based on common operating conditions such as size of load, operational condition (e.g., intermittent, continuous, process stage), operating speed or tachometer, common ambient environmental conditions such as humidity, temperature, air or fluid particulate, and the like. Subsets for analysis may be selected based on the effects of other nearby equipment such as nearby machines rotating at similar frequencies.

**[0688]** The monitoring application **8776** may then analyze the selected subset. In an illustrative example, data from a single component may be analyzed over different time periods such as one operating cycle, several operating cycles, a month, a year, the life of the component or the like. Data from multiple components of the same type may also be analyzed over different time periods. Trends in the data such as changes in frequency or amplitude may be correlated with failure and maintenance records associated with the same or a related component or piece of equipment. Trends in the data such as changing rates of change associated with start-up or different points in the process may be identified. Additional data may be introduced into the analysis such as output product quality, indicated success or failure of a process, and the like. Correlation of trends and values for different types of data may be analyzed to identify those parameters whose short-term analysis might provide the best prediction regarding expected performance. This information may be transmitted back to the monitoring device to update types of data collected and analyzed locally or to influence the design of future monitoring devices.

**[0689]** In an illustrative and non-limiting example, a monitoring device **8768** may be used to collect and process sensor data to measure mechanical torque. The monitoring device **8768** may be in communication with or include a high resolution, high speed vibration sensor to collect data over a period of time sufficient to measure multiple cycles of rotation. For gear driven components, the sampling resolution of the sensor should be such that the number of samples taken per cycle is at least equal to the number of gear teeth driving the component. It will be understood that a lower sampling resolution may also be utilized, which may result in a lower confidence determination and/or taking data over a longer period of time to develop sufficient statistical confidence. This data may then be used in the generation of a phase reference (relative probe) or tachometer signal for a piece of equipment. This phase reference may be used directly or used by the timer circuit **8714** to generate a timing signal to align phase data such as vibrational data or acceleration data from multiple sensors located at different positions on a component or on different components within a system. This information may facilitate the determination of torque for different components or the generation of an Operational Deflection Shape (ODS).

**[0690]** A higher resolution data stream may also provide additional data for the detection of transitory signals in low speed operations. The identification of transitory signals may enable the identification of defects in a piece of equipment or component operating a low RPMs.

**[0691]** In an illustrative and non-limiting example, the monitoring device may be used to identify mechanical jitter for use in failure prediction models. The monitoring device may begin acquiring data when the piece of equipment starts up, through ramping up to operating speed, and then during operation. Once at operating speed, it is anticipated that the torsional jitter should be minimal or within expected ranges,

and changes in torsion during this phase may be indicative of cracks, bearing faults, and the like. Additionally, known torsions may be removed from the signal to facilitate in the identification of unanticipated torsions resulting from system design flaws, component wear, or unexpected process events. Having phase information associated with the data collected at operating speed may facilitate identification of a location of vibration and potential component wear, and/or may be further correlated to a type of failure for a component. Relative phase information for a plurality of sensors located throughout a machine may facilitate the evaluation of torsion as it is propagated through a piece of equipment.

**[0692]** In embodiments, the monitoring application **8776** may have access to equipment specifications, equipment geometry, component specifications, component materials, anticipated state information for plurality of component types, operational history, historical detection values, component life models, and the like for use in analyzing the selected subset using rule-based or model-based analysis. In embodiments, the monitoring application **8776** may feed a neural net with the selected subset to learn to recognize various operating state, health states (e.g., lifetime predictions) and fault states utilizing deep learning techniques. In embodiments, a hybrid of the two techniques (model-based learning and deep learning) may be used.

**[0693]** In an illustrative and non-limiting example, component health of: conveyors and lifters in an assembly line; water pumps on industrial vehicles; factory air conditioning units; drilling machines, screw drivers, compressors, pumps, gearboxes, vibrating conveyors, mixers and motors situated in the oil and gas fields; factory mineral pumps; centrifuges, and refining tanks situated in oil and gas refineries; and compressors in gas handling systems may be monitored using the phase detection and alignment techniques, data monitoring devices and data collection systems described herein.

**[0694]** In an illustrative and non-limiting example, the component health of equipment to promote chemical reactions deployed in chemical and pharmaceutical production lines (e.g. rotating tank/mixer agitators, mechanical/rotating agitators, and propeller agitators) may be evaluated using the phase detection and alignment techniques, data monitoring devices and data collection systems described herein.

**[0695]** In an illustrative and non-limiting example, the component health of vehicle steering mechanisms and/or vehicle engines may be evaluated using the phase detection and alignment techniques, data monitoring devices and data collection systems described herein.

**[0696]** An example monitoring system for data collection, includes a data acquisition circuit structured to interpret a plurality of detection values, each of the plurality of detection values corresponding to at least one of a plurality of input sensors communicatively coupled to the data acquisition circuit; a signal evaluation circuit comprising: a timer circuit structured to generate at least one timing signal; and a phase detection circuit structured to determine a relative phase difference between at least one of the plurality of detection values and at least one of the timing signals from the timer circuit; and a response circuit structured to perform at least one operation in response to the relative phase difference. In certain further embodiments, an example system includes:

**[0697]** wherein the at least one operation is further in response to at least one of: a change in amplitude of at least one of the plurality of detection values; a change in frequency or relative phase of at least one of the plurality of detection values; a rate of change in both amplitude and relative phase of at least one the plurality of detection values; and a relative rate of change in amplitude and relative phase of at least one the plurality of detection values; wherein the at least one operation comprises issuing an alert; wherein the alert may be one of haptic, audible and visual; a data storage circuit, wherein the relative phase difference and at least one of the detection values and the timing signal are stored; wherein the at least one operation further comprises storing additional data in the data storage circuit; wherein the storing additional data in the data storage circuit is further in response to at least one of: a change in the relative phase difference and a relative rate of change in the relative phase difference; wherein the data acquisition circuit further comprises at least one multiplexer circuit (MUX) whereby alternative combinations of detection values may be selected based on at least one of user input and a selected operating parameter for a machine, wherein each of the plurality of detection values corresponds to at least one of the input sensors; wherein the at least one operation comprises enabling or disabling one or more portions of the multiplexer circuit, or altering the multiplexer control lines; wherein the data acquisition circuit comprises at least two multiplexer circuits and the at least one operation comprises changing connections between the at least two multiplexer circuits; and/or the system further comprising a MUX control circuit structured to interpret a subset of the plurality of detection values and provide the logical control of the MUX and the correspondence of MUX input and detected values as a result, wherein the logic control of the MUX comprises adaptive scheduling of the select lines.

**[0698]** An example system for data collection, includes: a data acquisition circuit structured to interpret a plurality of detection values, each of the plurality of detection values corresponding to at least one of a plurality of input sensors communicatively coupled to the data acquisition circuit; a signal evaluation circuit comprising: a timer circuit structured to generate a timing signal based on a first detected value of the plurality of detection values; and a phase detection circuit structured to determine a relative phase difference between a second detection value of the plurality of detection values and the timing signal; and a phase response circuit structured to perform at least one operation in response to the phase difference. In certain further embodiments, an example system includes wherein the at least one operation is further in response to at least one of: a change in amplitude of at least one of the plurality of detection values; a change in frequency or relative phase of at least one of the plurality of detection values; a rate of change in both amplitude and relative phase of at least one the plurality of detection values and a relative rate of change in amplitude and relative phase of at least one the plurality of detection values; wherein the at least one operation comprises issuing an alert; wherein the alert may be one of haptic, audible and visual; where the system, further includes a data storage circuit; wherein the relative phase difference and at least one of the detection values and the timing signal are stored; wherein the at least one operation further includes storing additional data in the data storage circuit; wherein the storing additional data in the data storage circuit is further in response to at least one of: a

change in the relative phase difference and a relative rate of change in the relative phase difference; wherein the data acquisition circuit further includes at least one multiplexer (MUX) circuit whereby alternative combinations of detection values may be selected based on at least one of user input and a selected operating parameter for a machine; wherein each of the plurality of detection values corresponds to at least one of the input sensors; wherein the at least one operation comprises enabling or disabling one or more portions of the multiplexer circuit, or altering the multiplexer control lines; wherein the data acquisition circuit comprises at least two multiplexer circuits and the at least one operation comprises changing connections between the at least two multiplexer circuits; where the system further comprising a MUX control circuit structured to interpret a subset of the plurality of detection values and provide the logical control of the MUX and the correspondence of MUX input and detected values as a result; and/or wherein the logic control of the MUX comprises adaptive scheduling of the select lines.

**[0699]** An example system for data collection, processing, and utilization of signals in an industrial environment includes a data acquisition circuit structured to interpret a plurality of detection values, each of the plurality of detection values corresponding to at least one of a plurality of input sensors communicatively coupled to the data acquisition circuit; a signal evaluation circuit comprising: a timer circuit structured to generate a timing signal based on a first detected value of the plurality of detection values; and a phase detection circuit structured to determine a relative phase difference between a second detection value of the plurality of detection values and the timing signal; a data storage facility for storing a subset of the plurality of detection values and the timing signal; a communication circuit structured to communicate at least one selected detection value and the timing signal to a remote server; and a monitoring application on the remote server structured to receive the at least one selected detection value and the timing signal; jointly analyze a subset of the detection values received from the plurality of monitoring devices; and recommend an action. In certain embodiments, the example system further includes wherein joint analysis comprises using the timing signal from each of the plurality of monitoring devices to align the detection values from the plurality of monitoring devices and/or wherein the subset of detection values is selected based on data associated with a detection value comprising at least one: common type of component, common type of equipment, and common operating conditions.

**[0700]** An example system for data collection in an industrial environment, includes: a data acquisition circuit structured to interpret a plurality of detection values, each of the plurality of detection values corresponding to at least one of a plurality of input sensors communicatively coupled to the data acquisition circuit, the data acquisition circuit comprising a multiplexer circuit whereby alternative combinations of the detection values may be selected based on at least one of user input, a detected state and a selected operating parameter for a machine, each of the plurality of detection values corresponding to at least one of the input sensors; a signal evaluation circuit comprising: a timer circuit structured to generate a timing signal; and a phase detection circuit structured to determine a relative phase difference between at least one of the plurality of detection values and a signal from the timer circuit; and a response circuit structured to perform at least one operation in response to the phase difference.

**[0701]** An example monitoring system for data collection in a piece of equipment, includes a data acquisition circuit structured to interpret a plurality of detection values, each of the plurality of detection values corresponding to at least one of a plurality of input sensors communicatively coupled to the data acquisition circuit; a timer circuit structured to generate a timing signal based on a first detected value of the plurality of detection values; a signal evaluation circuit structured to obtain at least one of vibration amplitude, vibration frequency and vibration phase location corresponding to a second detected value comprising: a phase detection circuit structured to determine a relative phase difference between a second detection value of the plurality of detection values and the timing signal; and a response circuit structured to perform at least one operation in response to at the at least one of the vibration amplitude, vibration frequency and vibration phase location.

**[0702]** A monitoring system for bearing analysis in an industrial environment, the monitoring device includes: a data acquisition circuit structured to interpret a plurality of detection values, each of the plurality of detection values corresponding to at least one of a plurality of input sensors communicatively coupled to the data acquisition circuit; a timer circuit structured to generate a timing signal a data storage for storing specifications and anticipated state information for a plurality of bearing types and buffering the plurality of detection values for a predetermined length of time; a timer circuit structured to generate a timing signal based on a first detected value of the plurality of detection values; a bearing analysis circuit structured to analyze buffered detection values relative to specifications and anticipated state information resulting in a life prediction comprising: a phase detection circuit structured to determine a relative phase difference between a second detection value of the plurality of detection values and the timing signal; a signal evaluation circuit structured to obtain at least one of vibration amplitude, vibration frequency and vibration phase location corresponding to a second detected value: and a response circuit structured to perform at least one operation in response to at the at least one of the vibration amplitude, vibration frequency and vibration phase location.

**[0703]** In embodiments, information about the health or other status or state information of or regarding a component or piece of industrial equipment may be obtained by monitoring the condition of various components throughout a process. Monitoring may include monitoring the amplitude of a sensor signal measuring attributes such as temperature, humidity, acceleration, displacement and the like. An embodiment of a data monitoring device **9000** is shown in FIG. **76** and may include a plurality of sensors **9006** communicatively coupled to a controller **9002**. The controller **9002**, which may be part of a data collection device, such as a mobile data collector, or part of a system, such as a network-deployed or cloud-deployed system, may include a data acquisition circuit **9004**, a signal evaluation circuit **9008** and a response circuit **9010**. The signal evaluation circuit **9008** may comprise a peak detection circuit **9012**. Additionally, the signal evaluation circuit **9008** may optionally comprise one or more of a phase detection circuit **9016**, a bandpass filter circuit **9018**, a phase lock loop circuit, a torsional analysis circuit, a bearing analysis circuit, and the

like. The bandpass filter **9018** may be used to filter a stream of detection values such that values, such as peaks and valleys, are detected only at or within bands of interest, such as frequencies of interest. The data acquisition circuit **9004** may include one or more analog-to-digital converter circuits **9014**. A peak amplitude detected by the peak detection circuit **9012** may be input into one or more analog-to-digital converter circuits **9014** to provide a reference value for scaling output of the analog-to-digital converter circuits **9014** appropriately.

**[0704]** The plurality of sensors **9006** may be wired to ports on the data acquisition circuit **9004**. The plurality of sensors **9006** may be wirelessly connected to the data acquisition circuit **9004**. The data acquisition circuit **9004** may be able to access detection values corresponding to the output of at least one of the plurality of sensors **9006** where the sensors **9006** may be capturing data on different operational aspects of a piece of equipment or an operating component.

**[0705]** The selection of the plurality of sensors **9006** for a data monitoring device **9000** designed for a specific component or piece of equipment may depend on a variety of considerations such as accessibility for installing new sensors, incorporation of sensors in the initial design, anticipated operational and failure conditions, resolution desired at various positions in a process or plant, reliability of the sensors, power availability, power utilization, storage utilization, and the like. The impact of a failure, time response of a failure (e.g., warning time and/or off-optimal modes occurring before failure), likelihood of failure, extent of impact of failure, and/or sensitivity required and/or difficulty to detection failure conditions may drive the extent to which a component or piece of equipment is monitored with more sensors and/or higher capability sensors being dedicated to systems where unexpected or undetected failure would be costly or have severe consequences.

**[0706]** The signal evaluation circuit **9008** may process the detection values to obtain information about a component or piece of equipment being monitored. Information extracted by the signal evaluation circuit **9008** may comprise information regarding a peak value of a signal such as a peak temperature, peak acceleration, peak velocity, peak pressure, peak weight bearing, peak strain, peak bending, or peak displacement. The peak detection may be done using analog or digital circuits. In embodiments, the peak detection circuit **9012** may be able to distinguish between "local" or short term peaks in a stream of detection values and a "global" or longer term peak. In embodiments, the peak detection circuit **9012** may be able to identify peak shapes (not just a single peak value) such as flat tops, asymptotic approaches, discrete jumps in the peak value or rapid/steep climbs in peak value, sinusoidal behavior within ranges and the like. Flat topped peaks may indicate saturation at of a sensor. Asymptotic approaches to a peak may indicate linear system behavior. Discrete jumps in value or steep changes in peak value may indicate quantized or nonlinear behavior of either the sensor doing the measurement or the behavior of the component. In embodiments, the system may be able to identify sinusoidal variations in the peak value within an envelope, such as an envelope established by line or curve connecting a series of peak values. It should be noted that references to "peaks" should be understood to encompass one or more "valleys," representing a series of low points in measurement, except where context indicates otherwise.

**[0707]** In embodiments, a peak value may be used as a reference for an analog-to-digital conversion circuit **9014**.

**[0708]** In an illustrative and non-limiting example, a temperature probe may measure the temperature of a gear as it rotates in a machine. The peak temperature may be detected by a peak detection circuit **9012**. The peak temperature may be fed into an analog-to-digital converter circuit **9014** to appropriately scale a stream of detection values corresponding to temperature readings of the gear as it rotates in a machine. The phase of the stream of detection values corresponding to temperature relative to an orientation of the gear may be determined by the phase detection circuit **9016**. Knowing where in the rotation of the gear a peak temperature is occurring may allow the identification of a bad gear tooth.

**[0709]** In some embodiments, two or more sets of detection values may be fused to create detection values for a virtual sensor. A peak detection circuit may be used to verify consistency in timing of peak values between at least one of the two or more sets of detection values and the detection values for the virtual sensor.

**[0710]** In embodiments, the signal evaluation circuit **9008** may be able to reset the peak detection circuit **9012** upon start-up of the monitoring device **9000**, upon edge detection of a control signal of the system being monitored, based on a user input, after a system error and the like. In embodiments, the signal evaluation circuit **9008** may discard an initial portion of the output of the peak detection circuit **9012** prior to using the peak value as a reference value for an analog-to-digital conversion circuit to allow the system to fully come on line.

**[0711]** Depending on the type of equipment, the component being measured, the environment in which the equipment is operating and the like, sensors **9006** may comprise one or more of, without limitation, a vibration sensor, a thermometer, a hygrometer, a voltage sensor, a current sensor, an accelerometer, a velocity detector, a light or electromagnetic sensor (e.g., determining temperature, composition and/or spectral analysis, and/or object position or movement), an image sensor, a structured light sensor, a laser-based image sensor, an acoustic wave sensor, a displacement sensor, a turbidity meter, a viscosity meter, a load sensor, a tri-axial sensor, an accelerometer, a tachometer, a fluid pressure meter, an air flow meter, a horsepower meter, a flow rate meter, a fluid particle detector, an acoustical sensor, a pH sensor, and the like, including, without limitation, any of the sensors described throughout this disclosure and the documents incorporated by reference.

**[0712]** The sensors **9006** may provide a stream of data over time that has a phase component, such as relating to acceleration or vibration, allowing for the evaluation of phase or frequency analysis of different operational aspects of a piece of equipment or an operating component. The sensors **9006** may provide a stream of data that is not conventionally phase-based, such as temperature, humidity, load, and the like. The sensors **9006** may provide a continuous or near continuous stream of data over time, periodic readings, event-driven readings, and/or readings according to a selected interval or schedule.

**[0713]** In embodiments, as illustrated in FIG. **76**, the sensors **9006** may be part of the data monitoring device **9000**, referred to herein in some cases as a data collector, which in some cases may comprise a mobile or portable data collector. In embodiments, as illustrated in FIGS. **77** and **78**,

one or more external sensors **9026**, which are not explicitly part of a monitoring device **9020** but rather are new, previously attached to or integrated into the equipment or component, may be opportunistically connected to or accessed by the monitoring device **9020**. The monitoring device **9020** may include a controller **9022**. The controller **9022** may include a response circuit **9010**, a signal evaluation circuit **9008** and a data acquisition circuit **9024**. The signal evaluation circuit **9008** may include a peak detection circuit **9012** and optionally a phase detection circuit **9016** and/or a bandpass filter circuit **9018**. The data acquisition circuit **9024** may include one or more input ports **9028**. The one or more external sensors **9026** may be directly connected to the one or more input ports **9028** on the data acquisition circuit **9024** of the controller **9022** or may be accessed by the data acquisition circuit **9004** wirelessly, such as by a reader, interrogator, or other wireless connection, such as over a short-distance wireless protocol. In embodiments as shown in FIG. **78**, a data acquisition circuit **9024** may further comprise a wireless communication circuit **9030**. The data acquisition circuit **9024** may use the wireless communication circuit **9030** to access detection values corresponding to the one or more external sensors **9026** wirelessly or via a separate source or some combination of these methods.

**[0714]** In embodiments as illustrated in FIG. **79**, the data acquisition circuit **9036** may further comprise a multiplexer circuit **9038** as described elsewhere herein. Outputs from the multiplexer circuit **9038** may be utilized by the signal evaluation circuit **9008**. The response circuit **9010** may have the ability to turn on and off portions of the multiplexor circuit **9038**. The response circuit **9010** may have the ability to control the control channels of the multiplexor circuit **9038**

**[0715]** The response circuit **9010** may evaluate the results of the signal evaluation circuit **9008** and, based on certain criteria, initiate an action. The criteria may include a predetermined peak value for a detection value from a specific sensor, a cumulative value of a sensor's corresponding detection value over time, a change in peak value, a rate of change in a peak value, and/or an accumulated value (e.g., a time spent above/below a threshold value, a weighted time spent above/below one or more threshold values, and/or an area of the detected value above/below one or more threshold values). The criteria may comprise combinations of data from different sensors such as relative values, relative changes in value, relative rates of change in value, relative values over time, and the like. The relative criteria may change with other data or information such as process stage, type of product being processed, type of equipment, ambient temperature and humidity, external vibrations from other equipment, and the like. The relative criteria may be reflected in one or more calculated statistics or metrics (including ones generated by further calculations on multiple criteria or statistics), which in turn may be used for processing (such as an on-board a data collector or by an external system), such as to be provided as an input to one or more of the machine learning capabilities described in this disclosure, to a control system (which may be on-board a data collector or remote, such as to control selection of data inputs, multiplexing of sensor data, storage, or the like), or as a data element that is an input to another system, such as a data stream or data package that may be available to a data marketplace, a SCADA system, a remote control system, a maintenance system, an analytic system, or other system.

**[0716]** Certain embodiments are described herein as detected values exceeding thresholds or predetermined values, but detected values may also fall below thresholds or predetermined values—for example where an amount of change in the detected value is expected to occur, but detected values indicate that the change may not have occurred. For example, and without limitation, vibrational data may indicate system agitation levels, properly operating equipment, or the like, and vibrational data below amplitude and/or frequency thresholds may be an indication of a process that is not operating according to expectations. For example, in a process involving a blender, a mixer, an agitator or the like, the absence of vibration may indicate that a blade, fin, vane or other working element is unable to move adequately, such as, for example, as a result of a working material being excessively viscous or as a result of a problem in gears (e.g., stripped gears, seizing in gears, or the like (a clutch, or the like). Except where the context clearly indicates otherwise, any description herein describing a determination of a value above a threshold and/or exceeding a predetermined or expected value is understood to include determination of a value below a threshold and/or falling below a predetermined or expected value.

**[0717]** The predetermined acceptable range may be based on anticipated system response or vibration based on the equipment geometry and control scheme such as number of bearings, relative rotational speed, influx of power to the system at a certain frequency, and the like. The predetermined acceptable range may also be based on long term analysis of detection values across a plurality of similar equipment and components and correlation of data with equipment failure.

**[0718]** In embodiments, the response circuit **9010** may issue an alert based on one or more of the criteria discussed above. In an illustrative example, an increase in peak temperature beyond a predetermined value may indicate a hot bearing that is starting to fail. In embodiments, the relative criteria for an alarm may change with other data or information such as process stage, type of product being processed on equipment, ambient temperature and humidity, external vibrations from other equipment and the like. In an illustrative and non-limiting example, the response circuit **9010** may initiate an alert if an amplitude, such as a vibrational amplitude and/or frequency, exceeds a predetermined maximum value, if there is a change or rate of change that exceeds a predetermined acceptable range, and/or if an accumulated value based on such amplitude and/or frequency exceeds a threshold.

**[0719]** In embodiments, the response circuit **9010** may cause the data acquisition circuit **9004** to enable or disable the processing of detection values corresponding to certain sensors based on one or more of the criteria discussed above. This may include switching to sensors having different response rates, sensitivity, ranges, and the like; accessing new sensors or types of sensors, accessing data from multiple sensors, and the like. Switching may be based on a detected peak value for the sensor being switched or based on the peak value of another sensor. Switching may be undertaken based on a model, a set of rules, or the like. In embodiments, switching may be under control of a machine learning system, such that switching is controlled based on one or more metrics of success, combined with input data, over a set of trials, which may occur under supervision of a human supervisor or under control of an automated system.

Switching may involve switching from one input port to another (such as to switch from one sensor to another). Switching may involve altering the multiplexing of data, such as combining different streams under different circumstances. Switching may involve activating a system to obtain additional data, such as moving a mobile system (such as a robotic or drone system), to a location where different or additional data is available (such as positioning an image sensor for a different view or positioning a sonar sensor for a different direction of collection) or to a location where different sensors can be accessed (such as moving a collector to connect up to a sensor that is disposed at a location in an environment by a wired or wireless connection). This switching may be implemented by changing the control signals for a multiplexor circuit **9038** and/or by turning on or off certain input sections of the multiplexor circuit **9038**.

**[0720]** In embodiments, the response circuit **9010** may adjust a sensor scaling value using the detected peak as a reference voltage. The response circuit **9010** may adjust a sensor sampling rate such that the peak value is captured.

**[0721]** The response circuit **9010** may identify sensor overload. In embodiments, the response circuit **9010** may make recommendations for the replacement of certain sensors in the future with sensors having different response rates, sensitivity, ranges, and the like. The response circuit **9010** may recommend design alterations for future embodiments of the component, the piece of equipment, the operating conditions, the process, and the like.

**[0722]** In embodiments, the response circuit **9010** may recommend maintenance at an upcoming process stop or initiate a maintenance call where the maintenance may include the replacement of the sensor with the same or an alternate type of sensor having a different response rate, sensitivity, range and the like. In embodiments, the response circuit **9010** may implement or recommend process changes—for example, to lower the utilization of a component that is near a maintenance interval, operating off-nominally, or failed for purpose but still at least partially operational, to change the operating speed of a component (such as to put it in a lower-demand mode), to initiate amelioration of an issue (such as to signal for additional lubrication of a roller bearing set, or to signal for an alignment process for a system that is out of balance), and the like.

**[0723]** In embodiments, as shown in FIG. **80**, the data monitoring device **9040** may include sensors **9006** and a controller **9042** which may include a data acquisition circuit **9004**, and a signal evaluation circuit **9008**. The signal evaluation circuit **9008** may include a peak detection circuit **9012** and, optionally, a phased detection circuit **9016** and/or a bandpass filter circuit **9018**. The controller **9042** may further include a data storage circuit **9044**, memory, and the like. The controller **9042** may further include a response circuit **9010**. The signal evaluation circuit **9008** may periodically store certain detection values in the data storage circuit **9044** to enable the tracking of component performance over time.

**[0724]** In embodiments, based on relevant criteria as described elsewhere herein, operating conditions and/or failure modes which may occur as sensor values approach one or more criteria, the signal evaluation circuit **9008** may store data in the data storage circuit **9044** based on the fit of data relative to one or more criteria, such as those described throughout this disclosure. Based on one sensor input meeting or approaching specified criteria or range, the signal evaluation circuit **9008** may store additional data such as RPMs, component loads, temperatures, pressures, vibrations or other sensor data of the types described throughout this disclosure in the data storage circuit **9068**. The signal evaluation circuit **9008** may store data at a higher data rate for greater granularity in future processing, the ability to reprocess at different sampling rates, and/or to enable diagnosing or post-processing of system information where operational data of interest is flagged, and the like.

**[0725]** In embodiments, the signal evaluation circuit **9008** may store new peaks that indicate changes in overall scaling over a long duration (e.g., scaling a data stream based on historical peaks over months of analysis). The signal evaluation circuit **9008** may store data when historical peak values are approached (e.g., as temperatures, pressures, vibrations, velocities, accelerations and the like approach historical peaks).

**[0726]** In embodiments as shown in FIGS. **81** and **82** and **83** and **84**, a data monitoring system **9046** may include at least one data monitoring device **9048**. At least one data monitoring device **9048** may include sensors **9006** and a controller **9050** comprising a data acquisition circuit **9004**, a signal evaluation circuit **9008**, a data storage circuit **9044**, and a communication circuit **9052** to allow data and analysis to be transmitted to a monitoring application **9056** on a remote server **9054**. The signal evaluation circuit **9008** may include at least one of a peak detection circuit **9012**. The signal evaluation circuit **9008** may periodically share data with the communication circuit **9052** for transmittal to the remote server **9054** to enable the tracking of component and equipment performance over time and under varying conditions by a monitoring application **9056**. Because relevant operating conditions and/or failure modes may occur as sensor values approach one or more criteria as described elsewhere herein, the signal evaluation circuit **9008** may share data with the communication circuit **9052** for transmittal to the remote server **9054** based on the fit of data relative to one or more criteria. Based on one sensor input meeting or approaching specified criteria or range, the signal evaluation circuit **9008** may share additional data such as RPMs, component loads, temperatures, pressures, vibrations, and the like for transmittal. The signal evaluation circuit **9008** may share data at a higher data rate for transmittal to enable greater granularity in processing on the remote server.

**[0727]** In embodiments, as shown in FIG. **81**, the communication circuit **9052** may communicate data directly to a remote server **9054**. In embodiments, as shown in FIG. **82**, the communication circuit **9052** may communicate data to an intermediate computer **9058** which may include a processor **9060** running an operating system **9062** and a data storage circuit **9064**.

**[0728]** In embodiments, as illustrated in FIGS. **83** and **84**, a data collection system **9066** may have a plurality of monitoring devices **9048** collecting data on multiple components in a single piece of equipment, collecting data on the same component across a plurality of pieces of equipment (both the same and different types of equipment) in the same facility as well as collecting data from monitoring devices in multiple facilities. A monitoring application **9056** on a remote server **9054** may receive and store one or more of detection values, timing signals or data coming from a plurality of the various monitoring devices **9048**.

**[0729]** In embodiments, as shown in FIG. **81**, the communication circuit **9052** may communicate data directly to a remote server **9054**. In embodiments, as shown in FIG. **82**, the communication circuit **9052** may communicate data to an intermediate computer **9058** which may include a processor **9060** running an operating system **9062** and a data storage circuit **9064**. There may be an individual intermediate computer **9058** associated with each monitoring device **9048** or an individual intermediate computer **9058** may be associated with a plurality of monitoring devices **9048** where the intermediate computer **9058** may collect data from a plurality of data monitoring devices and send the cumulative data to the remote server **9054**.

**[0730]** The monitoring application **9056** may select subsets of the detection values, timing signals and data to be jointly analyzed. Subsets for analysis may be selected based on a single type of component or a single type of equipment in which a component is operating. Subsets for analysis may be selected or grouped based on common operating conditions such as size of load, operational condition (e.g., intermittent, continuous), operating speed or tachometer, common ambient environmental conditions such as humidity, temperature, air or fluid particulate, and the like. Subsets for analysis may be selected based on the effects of other nearby equipment such as nearby machines rotating at similar frequencies, nearby equipment producing electromagnetic fields, nearby equipment producing heat, nearby equipment inducing movement or vibration, nearby equipment emitting vapors, chemicals or particulates, or other potentially interfering or intervening effects.

**[0731]** The monitoring application **9056** may then analyze the selected subset. In an illustrative example, data from a single component may be analyzed over different time periods such as one operating cycle, several operating cycles, a month, a year, the life of the component or the like. Data from multiple components of the same type may also be analyzed over different time periods. Trends in the data such as changes in frequency or amplitude may be correlated with failure and maintenance records associated with the same or a related component or piece of equipment. Trends in the data, such as changing rates of change associated with start-up or different points in the process, may be identified. Additional data may be introduced into the analysis such as output product quality, output quantity (such as per unit of time), indicated success or failure of a process, and the like. Correlation of trends and values for different types of data may be analyzed to identify those parameters whose short-term analysis might provide the best prediction regarding expected performance. This information may be transmitted back to the monitoring device to update types of data collected and analyzed locally or to influence the design of future monitoring devices.

**[0732]** In embodiments, the monitoring application **9056** may have access to equipment specifications, equipment geometry, component specifications, component materials, anticipated state information for a plurality of component types, operational history, historical detection values, component life models and the like for use analyzing the selected subset using rule-based or model-based analysis. In embodiments, the monitoring application **9056** may feed a neural net with the selected subset to learn to recognize peaks in waveform patterns by feeding a large data set sample of waveform behavior of a given type within which peaks are designated (such as by human analysts).

**[0733]** A monitoring system for data collection in an industrial environment, the monitoring system comprising: a data acquisition circuit structured to interpret a plurality of detection values from a plurality of input sensors communicatively coupled to the data acquisition circuit, each of the plurality of detection values corresponding to at least one of the input sensors; a peak detection circuit structured to determine at least one peak value in response to the plurality of detection values; and a peak response circuit structured to perform at least one operation in response to the at least one peak value.

**[0734]** An example monitoring system further includes: wherein the at least one operation is further in response to at least one of: a change in amplitude of at least one of the plurality of detection values; a change in frequency or relative phase of at least one of the plurality of detection values; a rate of change in both amplitude and relative phase of at least one of the plurality of detection values; and a relative rate of change in amplitude and relative phase of at least one of the plurality of detection values' wherein the at least one operation comprises issuing an alert; wherein the alert may be one of haptic, audible or visual; further comprising a data storage circuit, wherein the relative phase difference and at least one of the detection values and the timing signal are stored wherein the at least one operation further comprises storing additional data in the data storage circuit wherein the storing additional data in the data storage circuit is further in response to at least one of: a change in the relative phase difference and a relative rate of change in the relative phase difference wherein the data acquisition circuit further comprises at least one multiplexer circuit whereby alternative combinations of detection values may be selected based on at least one of user input and a selected operating parameter for a machine, wherein each of the plurality of detection values corresponds to at least one of the input sensors wherein the at least one operation comprises enabling or disabling one or more portions of the multiplexer circuit, or altering the multiplexer control lines wherein the data acquisition circuit comprises at least two multiplexer circuits and the at least one operation comprises changing connections between the at least two multiplexer circuits.

**[0735]** A monitoring system for data collection in an industrial environment, the monitoring system structure to receive input corresponding to a plurality of sensors, includes a data acquisition circuit structured to interpret a plurality of detection values, each of the plurality of detection values corresponding to at least one of the input sensors; a peak detection circuit structured to determine at least one peak value in response to the plurality of detection values; and a peak response circuit structured to perform at least one operation in response to the at least one peak value.

**[0736]** An example monitoring system further includes: wherein the at least one operation is further in response to at least one of: a change in amplitude of at least one of the plurality of detection values; a change in frequency or relative phase of at least one of the plurality of detection values; a rate of change in both amplitude and relative phase of at least one of the plurality of detection values; and a relative rate of change in amplitude and relative phase of at least one of the plurality of detection values wherein the at least one operation comprises issuing an alert wherein the alert may be one of haptic, audible or visual further comprising a data storage circuit, wherein the relative phase

difference and at least one of the detection values and the timing signal are stored wherein the at least one operation further comprises storing additional data in the data storage circuit wherein the storing additional data in the data storage circuit is further in response to at least one of: a change in the relative phase difference and a relative rate of change in the relative phase difference wherein the data acquisition circuit further comprises at least one multiplexer circuit whereby alternative combinations of detection values may be selected based on at least one of user input and a selected operating parameter for a machine, wherein each of the plurality of detection values corresponds to at least one of the input sensors wherein the at least one operation comprises enabling or disabling one or more portions of the multiplexer circuit, or altering the multiplexer control lines wherein the data acquisition circuit comprises at least two multiplexer circuits and the at least one operation comprises changing connections between the at least two multiplexer circuits.

**[0737]** An example system for data collection, processing, and utilization of signals in an industrial environment includes: a plurality of monitoring devices, each monitoring device comprising: a data acquisition circuit structured to interpret a plurality of detection values from a plurality of input sensors communicatively coupled to the data acquisition circuit, each of the plurality of detection values corresponding to at least one of the input sensors; a peak detection circuit structured to determine at least one peak value in response to the plurality of detection values; a peak response circuit structured to select at least one detection value in response to the at least one peak value; a communication circuit structured to communicate the at least one selected detection value to a remote server; and a monitoring application on the remote server structured to: receive the at least one selected detection value; jointly analyze received detection values from a subset of the plurality of monitoring devices; and recommend an action.

**[0738]** An example system further includes: the system further structured to subset detection values based on one of anticipated life of a component associated with detection values, type of the equipment associated with detection values, and operational conditions under which detection values were measured; wherein the analysis of the subset of detection values comprises feeding a neural net with the subset of detection values and supplemental information to learn to recognize various operating states, health states, life expectancies and fault states utilizing deep learning techniques; wherein the supplemental information comprises one of component specification, component performance, equipment specification, equipment performance, maintenance records, repair records and an anticipated state model wherein the at least one operation is further in response to at least one of: a change in amplitude of at least one of the plurality of detection values; a change in frequency or relative phase of at least one of the plurality of detection values; a rate of change in both amplitude and relative phase of at least one the plurality of detection values; and a relative rate of change in amplitude and relative phase of at least one the plurality of detection values wherein the at least one operation comprises issuing an alert wherein the alert may be one of haptic, audible and visual further comprising a data storage circuit, wherein the relative phase difference and at least one of the detection values and the timing signal are stored wherein the at least one operation further comprises storing additional data in the data storage circuit wherein the storing additional data in the data storage circuit is further in response to at least one of: a change in the relative phase difference and a relative rate of change in the relative phase difference wherein the data acquisition circuit further comprises at least one multiplexer circuit whereby alternative combinations of detection values may be selected based on at least one of user input and a selected operating parameter for a machine, wherein each of the plurality of detection values corresponds to at least one of the input sensors wherein the at least one operation comprises enabling or disabling one or more portions of the multiplexer circuit, or altering the multiplexer control lines and/or wherein the data acquisition circuit comprises at least two multiplexer circuits and the at least one operation comprises changing connections between the at least two multiplexer circuits.

**[0739]** An example motor monitoring system, includes: a data acquisition circuit structured to interpret a plurality of detection values from a plurality of input sensors communicatively coupled to the data acquisition circuit, each of the plurality of detection values corresponding to at least one of the input sensors; a data storage circuit structured to store specifications, system geometry, and anticipated state information for the motor and motor components, store historical motor performance and buffer the plurality of detection values for a predetermined length of time; a peak detection circuit structured to determine a plurality of peak values comprising at least a temperature peak value, a speed peak value and a vibration peak value in response to the plurality of detection values and analyze the peak values relative to buffered detection values, specifications and anticipated state information resulting in a motor performance parameter; and a peak response circuit structured to perform at least one operation in response to one of a peak value and a motor system performance parameter.

**[0740]** An example system for estimating a vehicle steering system performance parameter, the device includes: a data acquisition circuit structured to interpret a plurality of detection values from a plurality of input sensors communicatively coupled to the data acquisition circuit, each of the plurality of detection values corresponding to at least one of the input sensors; a data storage circuit structured to store specifications, system geometry, and anticipated state information for the vehicle steering system, the rack, the pinion, and the steering column, store historical steering system performance and buffer the plurality of detection values for a predetermined length of time; a peak detection circuit structured to determine a plurality of peak values comprising at least a temperature peak value, a speed peak value and a vibration peak value in response to the plurality of detection values and analyze the peak values relative to buffered detection values, specifications and anticipated state information resulting in a vehicle steering system performance parameter; and a peak response circuit structured to perform at least one operation in response to one of a peak value and a vehicle steering system performance parameter.

**[0741]** An example system for estimating a pump performance parameter, includes: a data acquisition circuit structured to interpret a plurality of detection values from a plurality of input sensors communicatively coupled to the data acquisition circuit, each of the plurality of detection values corresponding to at least one of the input sensors; a data storage circuit structured to store specifications, system

geometry, and anticipated state information for the pump and pump components associated with the detection values, store historical pump performance and buffer the plurality of detection values for a predetermined length of time; a peak detection circuit structured to determine a plurality of peak values comprising at least a temperature peak value, a speed peak value and a vibration peak value in response to the plurality of detection values and analyze the peak values relative to buffered detection values, specifications and anticipated state information resulting in a pump performance parameter; and a peak response circuit structured to perform at least one operation in response to one of a peak value and a pump performance parameter. In certain further embodiments, the example system includes wherein the pump is a water pump in a car and wherein the pump is a mineral pump.

**[0742]** An example system for estimating a drill performance parameter for a drilling machine, includes a data acquisition circuit structured to interpret a plurality of detection values from a plurality of input sensors communicatively coupled to the data acquisition circuit, each of the plurality of detection values corresponding to at least one of the input sensors; a data storage circuit structured to store specifications, system geometry, and anticipated state information for the drill and drill components associated with the detection values, store historical drill performance and buffer the plurality of detection values for a predetermined length of time; a peak detection circuit structured to determine a plurality of peak values comprising at least a temperature peak value, a speed peak value and a vibration peak value in response to the plurality of detection values and analyze the peak values relative to buffered detection values, specifications and anticipated state information resulting in a drill performance parameter; and a peak response circuit structured to perform at least one operation in response to one of a peak value and a drill performance parameter. An example system further includes wherein the drilling machine is one of an oil drilling machine and a gas drilling machine.

**[0743]** An example system for estimating a conveyor health parameter, the system includes: a data acquisition circuit structured to interpret a plurality of detection values from a plurality of input sensors communicatively coupled to the data acquisition circuit, each of the plurality of detection values corresponding to at least one of the input sensors; a data storage circuit structured to store specifications, system geometry, and anticipated state information for a conveyor and conveyor components associated with the detection values, store historical conveyor performance and buffer the plurality of detection values for a predetermined length of time; a peak detection circuit structured to determine a plurality of peak values comprising at least a temperature peak value, a speed peak value and a vibration peak value in response to the plurality of detection values and analyze the peak values relative to buffered detection values, specifications and anticipated state information resulting in a conveyor performance parameter; and a peak response circuit structured to perform at least one operation in response to one of a peak value and a conveyor performance parameter.

**[0744]** An example system for estimating an agitator health parameter, the system includes: a data acquisition circuit structured to interpret a plurality of detection values from a plurality of input sensors communicatively coupled to the data acquisition circuit, each of the plurality of detection values corresponding to at least one of the input sensors; a data storage circuit structured to store specifications, system geometry, and anticipated state information for an agitator and agitator components associated with the detection values, store historical agitator performance and buffer the plurality of detection values for a predetermined length of time; a peak detection circuit structured to determine a plurality of peak values comprising at least a temperature peak value, a speed peak value and a vibration peak value in response to the plurality of detection values and analyze the peak values relative to buffered detection values, specifications and anticipated state information resulting in an agitator performance parameter; and a peak response circuit structured to perform at least one operation in response to one of a peak value and an agitator performance parameter. In certain embodiments, a system further includes where the agitator is one of a rotating tank mixer, a large tank mixer, a portable tank mixer, a tote tank mixer, a drum mixer, a mounted mixer and a propeller mixer.

**[0745]** An example system for estimating a compressor health parameter, the system includes: a data acquisition circuit structured to interpret a plurality of detection values from a plurality of input sensors communicatively coupled to the data acquisition circuit, each of the plurality of detection values corresponding to at least one of the input sensors; a data storage circuit structured to store specifications, system geometry, and anticipated state information for a compressor and compressor components associated with the detection values, store historical compressor performance and buffer the plurality of detection values for a predetermined length of time; a peak detection circuit structured to determine a plurality of peak values comprising at least a temperature peak value, a speed peak value and a vibration peak value in response to the plurality of detection values and analyze the peak values relative to buffered detection values, specifications and anticipated state information resulting in a compressor performance parameter; and a peak response circuit structured to perform at least one operation in response to one of a peak value and a compressor performance parameter.

**[0746]** An example system for estimating an air conditioner health parameter, the system includes: a data acquisition circuit structured to interpret a plurality of detection values from a plurality of input sensors communicatively coupled to the data acquisition circuit, each of the plurality of detection values corresponding to at least one of the input sensors; a data storage circuit structured to store specifications, system geometry, and anticipated state information for an air conditioner and air conditioner components associated with the detection values, store historical air conditioner performance and buffer the plurality of detection values for a predetermined length of time; a peak detection circuit structured to determine a plurality of peak values comprising at least a temperature peak value, a speed peak value, a pressure value and a vibration peak value in response to the plurality of detection values and analyze the peak values relative to buffered detection values, specifications and anticipated state information resulting in an air conditioner performance parameter; and a peak response circuit structured to perform at least one operation in response to one of a peak value and an air conditioner performance parameter.

**[0747]** An example system for estimating a centrifuge health parameter, the system includes: a data acquisition

circuit structured to interpret a plurality of detection values from a plurality of input sensors communicatively coupled to the data acquisition circuit, each of the plurality of detection values corresponding to at least one of the input sensors; a data storage circuit structured to store specifications, system geometry, and anticipated state information for a centrifuge and centrifuge components associated with the detection values, store historical centrifuge performance and buffer the plurality of detection values for a predetermined length of time; a peak detection circuit structured to determine a plurality of peak values comprising at least a temperature peak value, a speed peak value and a vibration peak value in response to the plurality of detection values and analyze the peak values relative to buffered detection values, specifications and anticipated state information resulting in a centrifuge performance parameter; and a peak response circuit structured to perform at least one operation in response to one of a peak value and a centrifuge performance parameter.

**[0748]** Bearings are used throughout many different types of equipment and applications. Bearings may be present in or supporting shafts, motors, rotors, stators, housings, frames, suspension systems and components, gears, gear sets of various types, other bearings, and other elements. Bearings may be used as support for high speed vehicles such as maglev trains. Bearings are used to support rotating shafts for engines, motors, generators, fans, compressors, turbines and the like. Giant roller bearings may be used to support buildings and physical infrastructure. Different types of bearings may be used to support conventional, planetary and other types of gears. Bearings may be used to support transmissions and gear boxes such as roller thrust bearings, for example. Bearings may be used to support wheels, wheel hubs and other rolling parts using tapered roller bearings.

**[0749]** There are many different types of bearings such as roller bearings, needle bearings, sleeve bearings, ball bearings, radial bearings, thrust load bearings including ball thrust bearings used in low speed applications and roller thrust bearings, taper bearings and tapered roller bearings, specialized bearings, magnetic bearings, giant roller bearings, jewel bearings (e.g., Sapphire), fluid bearings, flexure bearings to support bending element loads, and the like. References to bearings throughout this disclosure is intended to include, but not be limited by, the terms listed above.

**[0750]** In embodiments, information about the health or other status or state information of or regarding a bearing in a piece of industrial equipment or in an industrial process may be obtained by monitoring the condition of various components of the industrial equipment or industrial process. Monitoring may include monitoring the amplitude and/or frequency and/or phase of a sensor signal measuring attributes such as temperature, humidity, acceleration, displacement and the like.

**[0751]** An embodiment of a data monitoring device **9200** is shown in FIG. **85** and may include a plurality of sensors **9206** communicatively coupled to a controller **9202**. The controller **9202** may include a data acquisition circuit **9204**, a data storage circuit **9216**, a signal evaluation circuit **9208** and, optionally, a response circuit **9210**. The signal evaluation circuit **9208** may comprise a frequency transformation circuit **9212** and a frequency evaluation circuit **9214**.

**[0752]** The plurality of sensors **9206** may be wired to ports **9226** (reference FIG. **86**) on the data acquisition circuit **9204**. The plurality of sensors **9206** may be wirelessly connected to the data acquisition circuit **9204**. The data acquisition circuit **9204** may be able to access detection values corresponding to the output of at least one of the plurality of sensors **9206** where the sensors **9206** may be capturing data on different operational aspects of a bearing or piece of equipment or infrastructure.

**[0753]** The selection of the plurality of sensors **9206** for a data monitoring device **9200** designed for a specific bearing or piece of equipment may depend on a variety of considerations such as accessibility for installing new sensors, incorporation of sensors in the initial design, anticipated operational and failure conditions, reliability of the sensors, and the like. The impact of failure may drive the extent to which a bearing or piece of equipment is monitored with more sensors and/or higher capability sensors being dedicated to systems where unexpected or undetected bearing failure would be costly or have severe consequences.

**[0754]** The signal evaluation circuit **9208** may process the detection values to obtain information about a bearing being monitored. The frequency transformation circuit **9212** may transform one or more time-based detection values to frequency information. The transformation may be accomplished using techniques such as a digital Fast Fourier transform ("FFT"), Laplace transform, Z-transform, wavelet transform, other frequency domain transform, or other digital or analog signal analysis techniques, including, without limitation, complex analysis, including complex phase evolution analysis.

**[0755]** The frequency evaluation circuit **9214** (or frequency analysis circuit) may be structured to detect signals at frequencies of interest. Frequencies of interest may include frequencies higher than the frequency at which the equipment rotates (as measured by a tachometer, for instance), various harmonics and/or resonant frequencies associated with the equipment design and operating conditions such as multiples of shaft rotation velocities or other rotating components for the equipment that is borne by the bearings. Changes in energy at frequencies close to the operating frequency may be an indicator of balance/imbalance in the system. Changes in energy at frequencies on the order of twice the operating frequency may be indicative of a system misalignment—for example, on the coupling, or a looseness in the system, (e.g., rattling at harmonics of the operating frequency). Changes in energy at frequencies close to three or four times the operating frequency, corresponding to the number of bolts on a coupling, may indicate wear of on one of the couplings. Changes in energy at frequencies of four, five, or more times the operating frequency may relate back to something that has a corresponding number of elements, such as if there are energy peaks or activity around five times the operating frequency there may be wear or an imbalance in a five-vane pump or the like.

**[0756]** In an illustrative and non-limiting example, in the analysis of roller bearings, frequencies of interest may include ball spin frequencies, cage spin frequencies, inner race frequency (as bearings often sit on a race inside a cage), outer race frequency and the like. Bearings that are damaged or beginning to fail may show humps of energy at the frequencies mentioned above and elsewhere in this disclosure. The energy at these frequencies may increase over time as the bearings wear more and become more damaged due to more variations in rotational acceleration and pings.

**[0757]** In an illustrative and non-limiting example, bad bearings may show humps of energy and the intensity of high frequency measurements may start to grow over time as bearings wear and become imperfect (greater acceleration and pings may show up in high frequency measurement domains) Those measurements may be indicators of air gaps in the bearing system. As bearings begin to wear, harder hits may cause the energy signal to move to higher frequencies.

**[0758]** In embodiments, the signal evaluation circuit **9208** may also include one or more of a phase detection circuit, a phase lock loop circuit, a bandpass filter circuit, a peak detection circuit, and the like.

**[0759]** In embodiments, the signal evaluation circuit **9208** may include a transitory signal analysis circuit. Transient signals may cause small amplitude vibrations. However, the challenge in bearing analysis is that you may receive a signal associated with a single or non-periodic impact and an exponential decay. Thus, the oscillation of the bearing may not be represented by a single sine wave, but rather by a spectrum of many high frequency sine waves. For example, a signal from a failing bearing may only be seen, in a time-based signal, as a low amplitude spike for a short amount of time. A signal from a failing bearing may be lower in amplitude than a signal associated with an imbalance even though the consequences of a failed bearing may be more significant. It is important to be able to identify these signals. This type of low amplitude, transient signal may be best analyzed using transient analysis rather than a conventional frequency transformation, such as an FFT, which would treat the signal like a low frequency sine wave. A higher resolution data stream may also provide additional data for the detection of transitory signals in low speed operations. The identification of transitory signals may enable the identification of defects in a piece of equipment or component operating at low RPMs.

**[0760]** In embodiments, the transitory signal analysis circuit for bearing analysis may include envelope modulation analysis and other transitory signal analysis techniques. The signal evaluation circuit **9208** may store long stream of detection values to the data storage circuit **9216**. The transitory signal analysis circuit may use envelope analysis techniques on those long streams of detection values to identify transient effects (such as impacts) which may not be identified by conventional sine wave analysis (such as FFTs).

**[0761]** The signal evaluation circuit **9208** may utilize transitory signal analysis models optimized for the type of component being measured such as bearings, gears, variable speed machinery and the like. In an illustrative and non-limiting example, a gear may resonate close to its average rotational speed. In an illustrative and non-limiting example, a bearing may resonate close to the bearing rotation frequency and produce a ringing in amplitude around that frequency. For example, if the shaft inner race is wearing there may be chatter between the inner race and the shaft resulting in amplitude modulation to the left and right of the bearing frequency. The amplitude modulation may demonstrate its own sine wave characteristics with its own side bands. Various signal processing techniques may be used to eliminate the sinusoidal component, resulting in a modulation envelope for analysis.

**[0762]** The signal evaluation circuit **9208** may be optimized for variable speed machinery. Historically, variable speed machinery was expensive to make, and it was common to use DC motors and variable sheaves, such that flow could be controlled using vanes. Variable speed motors became more common with solid-state drive advances ("SCR devices"). The base operating frequency of equipment may be varied from the 50-60 Hz provided by standard utility companies and either and slowed down or sped up to run the equipment at different speeds depending on the application. The ability to run the equipment at varying speeds may result in energy savings. However, depending on the equipment geometry, there may be some speeds which create vibrations at resonant frequencies, reducing the life of the components. Variable speed motors may also emit electricity into bearings which may damage the bearings. In embodiments, the analysis of long data streams for envelope modulation analysis and other transitory signal analysis techniques as described herein may be useful in identifying these frequencies such that control schemes for the equipment may be designed to avoid those speeds which result in unacceptable vibrations and/or damage to the bearings.

**[0763]** In an illustrative and non-limiting example, heating, ventilation and air conditioning ("HVAC") systems may be assembled on site using variable speed motors, fans, belts, compressors and the like where the operating speeds are not constant, and their relative relationships are unknown. In an illustrative and non-limiting example, variable speed motors may be used in fan pumps for building air circulation. Variable speed motors may be used to vary the speed of conveyors—for example, in manufacturing assembly lines or steel mills Variable speed motors may be used for fans in a pharmaceutical process, such as where it may be critical to avoid vibration.

**[0764]** In an illustrative and non-limiting example, sleeve bearings may be analyzed for defects. Sleeve bearings typically have an oil system. If the oil flow stops or the oil becomes severely contaminated, failure can occur very quickly. Therefore, a fluid particulate sensor or fluid pressure sensors may be an important source of detection values.

**[0765]** In an illustrative and non-limiting example, fan integrity may be evaluated by measuring air pulsations related to blade pass frequencies. For example, if a fan has 12 blades, 12 air pulsations may be measured. Variations in the amplitude of the pulsations associated with the different blades may be indicative of changes in a fan blade. Changes in frequencies associated with the air pulsations may be indicative of bearing problems.

**[0766]** In an illustrative and non-limiting example, compressors used in the gas and oil field or in gas handling equipment on an assembly line may be evaluated by measuring the periodic increases in energy/pressure in the storage vessel as gas is pumped into the vessel. Periodic variations in the amplitude of the energy increases may be associated with piston wear or damage to a portion of a rotary screw. Phase evaluation of the energy signal relative to timing signals may be helpful in identifying which piston or portion of the rotary screw has damage. Changes in frequencies associated with the energy pulsations may be indicative of bearing problems.

**[0767]** In an illustrative and non-limiting example, cavitation/air pockets in pumps may create shuttering in the pump housing and the output flow which may be identified with the frequency transformation and frequency analysis techniques described above and elsewhere herein.

**[0768]** In an illustrative and non-limiting example, the frequency transformation and frequency analysis techniques

described above and elsewhere herein may assist in the identification of problems in components of building HVAC systems such as big fans. If the dampers of the system are set poorly it may result in ducts pulsing or vibrating as air is pushed through the system. Monitoring of vibration sensors on the ducts may assist in the balancing of the system. If there are defects in the blades of the big fan this may also result in uneven air flow and resulting pulsation in the buildings ductwork.

**[0769]** In an illustrative and non-limiting example, detection values from acoustical sensors located close to the bearings may assist in the identification of issues in the engagement between gears or bad bearings. Based on a knowledge of gear ratios, such as the "in" and "out" gear ratios, for a system and measurements of the input and output rotational speed, detection values may be evaluated for energy occurring at those ratios, which in turn may be used to identify bad bearings. This could be done with simple off the shelf motors rather than requiring extensive retrofitting of the motor with sensors.

**[0770]** Based on the output of its various components, the signal evaluation circuit **9208** may make a bearing life prediction, identify a bearing health parameter, identify a bearing performance parameter, determine a bearing health parameter (e.g., fault conditions), and the like. The signal evaluation circuit **9208** may identify wear on a bearing, identify the presence of foreign matter (e.g., particulates) in the bearings, identify air gaps or a loss of fluid in oil/fluid coated bearings, identify a loss of lubrication in a set of bearings, identify a loss of power for magnetic bearings and the like, identify strain/stress of flexure bearings, and the like. The signal evaluation circuit **9208** may identify optimal operation parameters for a piece of equipment to extend bearing life. The signal evaluation circuit **9208** may identify behavior (resonant wobble) at a selected operational frequency (e.g., shaft rotation rate).

**[0771]** The signal evaluation circuit **9208** may communicate with the data storage circuit **9216** to access equipment specifications, equipment geometry, bearing specifications, bearing materials, anticipated state information for a plurality of bearing types, operational history, historical detection values, and the like for use in assessing the output of its various components. The signal evaluation circuit **9208** may buffer a subset of the plurality of detection values, intermediate data such as time-based detection values transformed to frequency information, filtered detection values, identified frequencies of interest, and the like for a predetermined length of time. The signal evaluation circuit **9208** may periodically store certain detection values in the data storage circuit **9216** to enable the tracking of component performance over time. In embodiments, based on relevant operating conditions and/or failure modes that may occur as detection values approach one or more criteria, the signal evaluation circuit **9208** may store data in the data storage circuit **9216** based on the fit of data relative to one or more criteria, such as those described throughout this disclosure. Based on one sensor input meeting or approaching specified criteria or range, the signal evaluation circuit **9208** may store additional data such as RPMs, component loads, temperatures, pressures, vibrations or other sensor data of the types described throughout this disclosure in the data storage circuit **9216**. The signal evaluation circuit **9208** may store data at a higher data rate for greater granularity in future processing, the ability to reprocess at different sampling rates, and/or to enable diagnosing or post-processing of system information where operational data of interest is flagged, and the like.

**[0772]** Depending on the type of equipment, the component being measured, the environment in which the equipment is operating and the like, sensors **9206** may comprise one or more of, without limitation, a vibration sensor, an optical vibration sensor, a thermometer, a hygrometer, a voltage sensor, a current sensor, an accelerometer, a velocity detector, a light or electromagnetic sensor (e.g., determining temperature, composition and/or spectral analysis, and/or object position or movement), an image sensor, a structured light sensor, a laser-based image sensor, an infrared sensor, an acoustic wave sensor, a heat flux sensor, a displacement sensor, a turbidity meter, a viscosity meter, a load sensor, a tri-axial vibration sensor, an accelerometer, a tachometer, a fluid pressure meter, an air flow meter, a horsepower meter, a flow rate meter, a fluid particle detector, an acoustical sensor, a pH sensor, and the like, including, without limitation, any of the sensors described throughout this disclosure and the documents incorporated by reference. The sensors may typically comprise at least a temperature sensor, a load sensor, a tri-axial sensor and a tachometer.

**[0773]** The sensors **9206** may provide a stream of data over time that has a phase component, such as relating to acceleration or vibration, allowing for the evaluation of phase or frequency analysis of different operational aspects of a piece of equipment or an operating component. The sensors **9206** may provide a stream of data that is not conventionally phase-based, such as temperature, humidity, load, and the like. The sensors **9206** may provide a continuous or near continuous stream of data over time, periodic readings, event-driven readings, and/or readings according to a selected interval or schedule.

**[0774]** In embodiments, as illustrated in FIG. **85**, the sensors **9206** may be part of the data monitoring device **9200**, referred to herein in some cases as a data collector, which in some cases may comprise a mobile or portable data collector. In embodiments, as illustrated in FIGS. **86** and **87**, one or more external sensors **9224**, which are not explicitly part of a monitoring device **9218** but rather are new, previously attached to or integrated into the equipment or component, may be opportunistically connected to or accessed by the monitoring device **9218**. The monitoring device **9218** may include a controller **9220**. The controller **9202** may include a data acquisition circuit **9222**, a data storage circuit **9216**, a signal evaluation circuit **9208** and, optionally, a response circuit **9210**. The signal evaluation circuit **9208** may comprise a frequency transformation circuit **9212** and a frequency analysis circuit **9214**. The data acquisition circuit **9222** may include one or more input ports **9226**. The one or more external sensors **9224** may be directly connected to the one or more input ports **9226** on the data acquisition circuit **9222** of the controller **9220** or may be accessed by the data acquisition circuit **9222** wirelessly, such as by a reader, interrogator, or other wireless connection, such as over a short-distance wireless protocol. In embodiments as shown in FIG. **87**, a data acquisition circuit **9222** may further comprise a wireless communications circuit **9262**. The data acquisition circuit **9222** may use the wireless communications circuit **9262** to access detection values corresponding to the one or more external sensors **9224** wirelessly or via a separate source or some combination of these methods.

**[0775]** In embodiments, as illustrated in FIG. **88**, the data acquisition circuit **9222** may further comprise a multiplexer circuit **9236** as described elsewhere herein. Outputs from the multiplexer circuit **9236** may be utilized by the signal evaluation circuit **9208**. The response circuit **9210** may have the ability to turn on and off portions of the multiplexor circuit **9236**. The response circuit **9210** may have the ability to control the control channels of the multiplexor circuit **9236**.

**[0776]** The response circuit **9210** may initiate actions based on a bearing performance parameter, a bearing health value, a bearing life prediction parameter, and the like. The response circuit **9210** may evaluate the results of the signal evaluation circuit **9208** and, based on certain criteria or the output from various components of the signal evaluation circuit **9208**, initiate an action. The criteria may include a sensor's detection values at certain frequencies or phases relative to a timer signal where the frequencies or phases of interest may be based on the equipment geometry, equipment control schemes, system input, historical data, current operating conditions, and/or an anticipated response. The criteria may include a sensor's detection values at certain frequencies or phases relative to detection values of a second sensor. The criteria may include signal strength at certain resonant frequencies/harmonics relative to detection values associated with a system tachometer or anticipated based on equipment geometry and operation conditions. Criteria may include a predetermined peak value for a detection value from a specific sensor, a cumulative value of a sensor's corresponding detection value over time, a change in peak value, a rate of change in a peak value, and/or an accumulated value (e.g., a time spent above/below a threshold value, a weighted time spent above/below one or more threshold values, and/or an area of the detected value above/below one or more threshold values). The criteria may comprise combinations of data from different sensors such as relative values, relative changes in value, relative rates of change in value, relative values over time, and the like. The relative criteria may change with other data or information such as process stage, type of product being processed, type of equipment, ambient temperature and humidity, external vibrations from other equipment, and the like. The relative criteria may be reflected in one or more calculated statistics or metrics (including ones generated by further calculations on multiple criteria or statistics), which in turn may be used for processing (such as on-board a data collector or by an external system), such as to be provided as an input to one or more of the machine learning capabilities described in this disclosure, to a control system (which may be on board a data collector or remote, such as to control selection of data inputs, multiplexing of sensor data, storage, or the like), or as a data element that is an input to another system, such as a data stream or data package that may be available to a data marketplace, a SCADA system, a remote control system, a maintenance system, an analytic system, or other system.

**[0777]** Certain embodiments are described herein as detected values exceeding thresholds or predetermined values, but detected values may also fall below thresholds or predetermined values—for example, where an amount of change in the detected value is expected to occur, but detected values indicate that the change may not have occurred. For example, and without limitation, vibrational data may indicate system agitation levels, properly operating equipment, or the like, and vibrational data below amplitude and/or frequency thresholds may be an indication of a process that is not operating according to expectations. Except where the context clearly indicates otherwise, any description herein describing a determination of a value above a threshold and/or exceeding a predetermined or expected value is understood to include determination of a value below a threshold and/or falling below a predetermined or expected value.

**[0778]** The predetermined acceptable range may be based on anticipated system response or vibration based on the equipment geometry and control scheme such as number of bearings, relative rotational speed, influx of power to the system at a certain frequency, and the like. The predetermined acceptable range may also be based on long term analysis of detection values across a plurality of similar equipment and components and correlation of data with equipment failure.

**[0779]** In some embodiments, an alert may be issued based on some of the criteria discussed above. In an illustrative example, an increase in temperature and energy at certain frequencies may indicate a hot bearing that is starting to fail. In embodiments, the relative criteria for an alarm may change with other data or information such as process stage, type of product being processed on equipment, ambient temperature and humidity, external vibrations from other equipment and the like. In an illustrative and non-limiting example, the response circuit **9210** may initiate an alert if a vibrational amplitude and/or frequency exceeds a predetermined maximum value, if there is a change or rate of change that exceeds a predetermined acceptable range, and/or if an accumulated value based on vibrational amplitude and/or frequency exceeds a threshold.

**[0780]** In embodiments, response circuit **9210** may cause the data acquisition circuit **9204** to enable or disable the processing of detection values corresponding to certain sensors based on some of the criteria discussed above. This may include switching to sensors having different response rates, sensitivity, ranges, and the like, or accessing new sensors or types of sensors, and the like. Switching may be undertaken based on a model, a set of rules, or the like. In embodiments, switching may be under control of a machine learning system, such that switching is controlled based on one or more metrics of success, combined with input data, over a set of trials, which may occur under supervision of a human supervisor or under control of an automated system. Switching may involve switching from one input port to another (such as to switch from one sensor to another). Switching may involve altering the multiplexing of data, such as combining different streams under different circumstances. Switching may also involve activating a system to obtain additional data, such as moving a mobile system (such as a robotic or drone system), to a location where different or additional data is available (such as positioning an image sensor for a different view or positioning a sonar sensor for a different direction of collection) or to a location where different sensors can be accessed (such as moving a collector to connect up to a sensor that is disposed at a location in an environment by a wired or wireless connection). This switching may be implemented by changing the control signals for a multiplexor circuit **9236** and/or by turning on or off certain input sections of the multiplexor circuit **9236**. The response circuit **9210** may make recommendations for the replacement of certain sensors in the future with sensors having different response rates, sensi-

tivity, ranges, and the like. The response circuit **9210** may recommend design alterations for future embodiments of the component, the piece of equipment, the operating conditions, the process, and the like.

**[0781]** In embodiments, the response circuit **9210** may recommend maintenance at an upcoming process stop or initiate a maintenance call. The response circuit **9210** may recommend changes in process or operating parameters to remotely balance the piece of equipment. In embodiments, the response circuit **9210** may implement or recommend process changes—for example to lower the utilization of a component that is near a maintenance interval, operating off-nominally, or failed for purpose but still at least partially operational, to change the operating speed of a component (such as to put it in a lower-demand mode), to initiate amelioration of an issue (such as to signal for additional lubrication of a roller bearing set, or to signal for an alignment process for a system that is out of balance), and the like.

**[0782]** In embodiments as shown in FIGS. **89**, **90**, **91**, and **92**, a data monitoring system **9240** may include at least one data monitoring device **9250**. The at least one data monitoring device **9250** may include sensors **9206** and a controller **9242** comprising a data acquisition circuit **9204**, a signal evaluation circuit **9208**, a data storage circuit **9216**, and a communications circuit **9246**. The signal evaluation circuit **9208** may include at least one of a frequency detection circuit **9212** and a frequency analysis circuit **9214**. There may also be an optional response circuit as described above and elsewhere herein. The signal evaluation circuit **9208** may periodically share data with the communication circuit **9246** for transmittal to a remote server **9244** to enable the tracking of component and equipment performance over time and under varying conditions by a monitoring application **9248**. Because relevant operating conditions and/or failure modes may occur as sensor values approach one or more criteria, the signal evaluation circuit **9208** may share data with the communication circuit **9246** for transmittal to the remote server **9244** based on the fit of data relative to one or more criteria. Based on one sensor input meeting or approaching specified criteria or range, the signal evaluation circuit **9208** may share additional data such as RPMs, component loads, temperatures, pressures, vibrations, and the like for transmittal. The signal evaluation circuit **9208** may share data at a higher data rate for transmittal to enable greater granularity in processing on the remote server.

**[0783]** In embodiments, as shown in FIG. **89**, the communications circuit **9246** may communicate data directly to a remote server **9244**. In embodiments, as shown in FIG. **90**, the communications circuit **9246** may communicate data to an intermediate computer **9252**, which may include a processor **9254** running an operating system **9256** and a data storage circuit **9258**. The intermediate computer **9252** may collect data from a plurality of data monitoring devices and send the cumulative data to the remote server **9244**.

**[0784]** In embodiments, as illustrated in FIGS. **91** and **92**, a data collection system **9260** may have a plurality of monitoring devices **9250** collecting data on multiple components in a single piece of equipment, collecting data on the same component across a plurality of pieces of equipment, (both the same and different types of equipment) in the same facility as well as collecting data from monitoring devices in multiple facilities. A monitoring application **9248** on a remote server **9244** may receive and store one or more of the following: detection values, timing signals and data coming from a plurality of the various monitoring devices **9250**. In embodiments, as shown in FIG. **91**, the communications circuit **9246** may communicate data directly to a remote server **9244**. In embodiments, as shown in FIG. **92**, the communications circuit **9246** may communicate data to an intermediate computer **9252**, which may include a processor **9254** running an operating system **9256** and a data storage circuit **9258**. There may be an individual intermediate computer **9252** associated with each monitoring device **9264** or an individual intermediate computer **9252** may be associated with a plurality of monitoring devices **9250** where the intermediate computer **9252** may collect data from a plurality of data monitoring devices and send the cumulative data to the remote server **9244**.

**[0785]** The monitoring application **9248** may select subsets of the detection values, timing signals and data to be jointly analyzed. Subsets for analysis may be selected based on a bearing type, bearing materials, or a single type of equipment in which a bearing is operating. Subsets for analysis may be selected or grouped based on common operating conditions or operational history such as size of load, operational condition (e.g., intermittent, continuous), operating speed or tachometer, common ambient environmental conditions such as humidity, temperature, air or fluid particulate, and the like. Subsets for analysis may be selected based on common anticipated state information. Subsets for analysis may be selected based on the effects of other nearby equipment such as nearby machines rotating at similar frequencies, nearby equipment producing electromagnetic fields, nearby equipment producing heat, nearby equipment inducing movement or vibration, nearby equipment emitting vapors, chemicals or particulates, or other potentially interfering or intervening effects.

**[0786]** The monitoring application **9248** may analyze a selected subset. In an illustrative example, data from a single component may be analyzed over different time periods, such as one operating cycle, cycle-to-cycle comparisons, trends over several operating cycles/times such as a month, a year, the life of the component, or the like. Data from multiple components of the same type may also be analyzed over different time periods. Trends in the data such as changes in frequency or amplitude may be correlated with failure and maintenance records associated with the same component or piece of equipment. Trends in the data such as changing rates of change associated with start-up or different points in the process may be identified. Additional data may be introduced into the analysis such as output product quality, output quantity (such as per unit of time), indicated success or failure of a process, and the like. Correlation of trends and values for different types of data may be analyzed to identify those parameters whose short-term analysis might provide the best prediction regarding expected performance. The analysis may identify model improvements to the model for anticipated state information, recommendations around sensors to be used, positioning of sensors and the like. The analysis may identify additional data to collect and store. The analysis may identify recommendations regarding needed maintenance and repair and/or the scheduling of preventative maintenance. The analysis may identify recommendations around purchasing replacement bearings and the timing of the replacement of the bearings. The analysis may result in warning regarding the dangers of catastrophic failure conditions. This information may be

transmitted back to the monitoring device to update types of data collected and analyzed locally or to influence the design of future monitoring devices.

**[0787]** In embodiments, the monitoring application **9248** may have access to equipment specifications, equipment geometry, bearing specifications, bearing materials, anticipated state information for a plurality of bearing types, operational history, historical detection values, bearing life models and the like for use analyzing the selected subset using rule-based or model-based analysis. In embodiments, the monitoring application **9248** may feed a neural net with the selected subset to learn to recognize various operating state, health states (e.g., lifetime predictions) and fault states utilizing deep learning techniques. In embodiments, a hybrid of the two techniques (model-based learning and deep learning) may be used.

**[0788]** In an illustrative and non-limiting example, the health of bearings on conveyors and lifters in an assembly line, in water pumps on industrial vehicles and in compressors in gas handling systems, in compressors situated out in the gas and oil fields, in factory air conditioning units and in factory mineral pumps may be monitored using the frequency transformation and frequency analysis techniques, data monitoring devices and data collection systems described herein.

**[0789]** In an illustrative and non-limiting example, the health of one or more of bearings, gears, blades, screws and associated shafts, motors, rotors, stators, gears, and other components of gear boxes, motors, pumps, vibrating conveyors, mixers, centrifuges, drilling machines, screw drivers and refining tanks situated in the oil and gas fields may be evaluated using the frequency transformation and frequency analysis techniques, data monitoring devices and data collection systems described herein.

**[0790]** In an illustrative and non-limiting example, the health of bearings and associated shafts, motors, rotors, stators, gears, and other components of rotating tank/mixer agitators, mechanical/rotating agitators, and propeller agitators, to promote chemical reactions deployed in chemical and pharmaceutical production lines may be evaluated using the frequency transformation and frequency analysis techniques, data monitoring devices and data collection systems described herein.

**[0791]** In an illustrative and non-limiting example, the health of bearings and associated shafts, motors, rotors, stators, gears, and other components of vehicle systems such as steering mechanisms or engines may be evaluated using the frequency transformation and frequency analysis techniques, data monitoring devices and data collection systems described herein.

**[0792]** An example monitoring device for bearing analysis in an industrial environment, includes: a data acquisition circuit structured to interpret a plurality of detection values, each of the plurality of detection values corresponding to at least one of a plurality of input sensors communicatively coupled to the data acquisition circuit; a data storage for storing specifications and anticipated state information for a plurality of bearing types and buffering the plurality of detection values for a predetermined length of time; and a bearing analysis circuit structured to analyze buffered detection values relative to specifications and anticipated state information resulting in a bearing performance parameter.

**[0793]** In certain further embodiments, an example monitoring device includes one or more of: a response circuit to perform at least one operation in response to the bearing performance parameter, wherein the plurality of input sensors includes at least two sensors selected from the group consisting of a temperature sensor, a load sensor, an optical vibration sensor, an acoustic wave sensor, a heat flux sensor, an infrared sensor, an accelerometer, a tri-axial vibration sensor and a tachometer; wherein the at least one operation is further in response to at least one of: a change in amplitude of at least one of the plurality of detection values; a change in frequency or relative phase of at least one of the plurality of detection values; a rate of change in both amplitude and relative phase of at least one of the plurality of detection values; and a relative rate of change in amplitude and relative phase of at least one of the plurality of detection values; wherein the at least one operation comprises issuing an alert; wherein the alert may be one of haptic, audible and visual; wherein the at least one operation further comprises storing additional data in the data storage circuit; wherein the storing additional data in the data storage circuit is further in response to at least one of: a change in the relative phase difference and a relative rate of change in the relative phase difference.

**[0794]** An example monitoring device for bearing analysis in an industrial environment, the monitoring device includes: a data acquisition circuit structured to interpret a plurality of detection values, each of the plurality of detection values corresponding to at least one of a plurality of input sensors communicatively coupled to the data acquisition circuit; a data storage for storing specifications and anticipated state information for a plurality of bearing types and buffering the plurality of detection values for a predetermined length of time; and a bearing analysis circuit structured to analyze buffered detection values relative to specifications and anticipated state information resulting in a bearing health value.

**[0795]** In certain embodiments, an example monitoring device further includes one or more of: a response circuit to perform at least one operation in response to the bearing health value, wherein the plurality of input sensors includes at least two sensors selected from the group consisting of a temperature sensor, a load sensor, an optical vibration sensor, an acoustic wave sensor, a heat flux sensor, an infrared sensor, an accelerometer, a tri-axial vibration sensor and a tachometer; wherein the at least one operation is further in response to at least one of: a change in amplitude of at least one of the plurality of detection values; a change in frequency or relative phase of at least one of the plurality of detection values; a rate of change in both amplitude and relative phase of at least one of the plurality of detection values; and a relative rate of change in amplitude and relative phase of at least one of the plurality of detection values; wherein the at least one operation comprises issuing an alert; wherein the alert may be one of haptic, audible and visual; wherein the at least one operation further comprises storing additional data in the data storage circuit; wherein the storing additional data in the data storage circuit is further in response to at least one of: a change in the relative phase difference and a relative rate of change in the relative phase difference.

**[0796]** An example monitoring device for bearing analysis in an industrial environment, includes: a data acquisition circuit structured to interpret a plurality of detection values, each of the plurality of detection values corresponding to at least one of a plurality of input sensors communicatively

coupled to the data acquisition circuit; a data storage for storing specifications and anticipated state information for a plurality of bearing types and buffering the plurality of detection values for a predetermined length of time; and a bearing analysis circuit structured to analyze buffered detection values relative to specifications and anticipated state information resulting in a bearing life prediction parameter.

**[0797]** In certain embodiments, a monitoring device further includes one or more of: a response circuit to perform at least one operation in response to the bearing life prediction parameter, wherein the plurality of input sensors includes at least two sensors selected from the group consisting of a temperature sensor, a load sensor, an optical vibration sensor, an acoustic wave sensor, a heat flux sensor, an infrared sensor, an accelerometer, a tri-axial vibration sensor and a tachometer; wherein the at least one operation is further in response to at least one of: a change in amplitude of at least one of the plurality of detection values; a change in frequency or relative phase of at least one of the plurality of detection values; a rate of change in both amplitude and relative phase of at least one of the plurality of detection values; and a relative rate of change in amplitude and relative phase of at least one of the plurality of detection values; wherein the at least one operation comprises issuing an alert; wherein the alert may be one of haptic, audible and visual; wherein the at least one operation further comprises storing additional data in the data storage circuit; wherein the storing additional data in the data storage circuit is further in response to at least one of: a change in the relative phase difference and a relative rate of change in the relative phase difference.

**[0798]** An example monitoring device for bearing analysis in an industrial environment, includes: a data acquisition circuit structured to interpret a plurality of detection values, each of the plurality of detection values corresponding to at least one of a plurality of input sensors communicatively coupled to the data acquisition circuit; a data storage for storing specifications and anticipated state information for a plurality of bearing types and buffering the plurality of detection values for a predetermined length of time; and a bearing analysis circuit structured to analyze buffered detection values relative to specifications and anticipated state information resulting in a bearing performance parameter, wherein the data acquisition circuit comprises a multiplexer circuit whereby alternative combinations of the detection values may be selected based on at least one of user input, a detected state and a selected operating parameter for a machine.

**[0799]** In certain further embodiments, an example monitoring device further includes one or more of: a response circuit to perform at least one operation in response to the bearing performance parameter, wherein the plurality of input sensors includes at least two sensors selected from the group consisting of a temperature sensor, a load sensor, an optical vibration sensor, an acoustic wave sensor, a heat flux sensor, an infrared sensor, an accelerometer, a tri-axial vibration sensor and a tachometer; a change in amplitude of at least one of the plurality of detection values; a change in frequency or relative phase of at least one of the plurality of detection values; a rate of change in both amplitude and relative phase of at least one of the plurality of detection values; and a relative rate of change in amplitude and relative phase of at least one of the plurality of detection values; wherein the at least one operation comprises issuing an alert; wherein the alert may be one of haptic, audible and visual; wherein the at least one operation further comprises storing additional data in the data storage circuit; wherein the storing additional data in the data storage circuit is further in response to at least one of: a change in the relative phase difference and a relative rate of change in the relative phase difference; wherein the at least one operation comprises enabling or disabling one or more portions of the multiplexer circuit, or altering the multiplexer control lines; wherein the data acquisition circuit comprises at least two multiplexer circuits and the at least one operation comprises changing connections between the at least two multiplexer circuits.

**[0800]** An example system for data collection, processing, and bearing analysis in an industrial environment includes: a plurality of monitoring devices, each monitoring device comprising: a data acquisition circuit structured to interpret a plurality of detection values, each of the plurality of detection values corresponding to at least one of a plurality of input sensors communicatively coupled to the data acquisition circuit; a data storage for storing specifications and anticipated state information for a plurality of bearing types and buffering the plurality of detection values for a predetermined length of time;

a bearing analysis circuit structured to analyze buffered detection values relative to specifications and anticipated state information resulting in a bearing life prediction; a communication circuit structured to communicate with a remote server providing the bearing life prediction and a portion of the buffered detection values to the remote server; and a monitoring application on the remote server structured to receive, store and jointly analyze a subset of the detection values from the plurality of monitoring devices.

**[0801]** In certain further embodiments, an example monitoring device includes one or more of: a response circuit to perform at least one operation in response to the bearing life prediction, wherein the plurality of input sensors includes at least two sensors selected from the group consisting of a temperature sensor, a load sensor, an optical vibration sensor, an acoustic wave sensor, a heat flux sensor, an infrared sensor, an accelerometer, a tri-axial vibration sensor and a tachometer; wherein the at least one operation is further in response to at least one of: a change in amplitude of at least one of the plurality of detection values; a change in frequency or relative phase of at least one of the plurality of detection values; a rate of change in both amplitude and relative phase of at least one of the plurality of detection values; and a relative rate of change in amplitude and relative phase of at least one of the plurality of detection values; wherein the at least one operation comprises issuing an alert; wherein the alert may be one of haptic, audible and visual; wherein the at least one operation further comprises storing additional data in the data storage circuit; wherein the storing additional data in the data storage circuit is further in response to at least one of: a change in the relative phase difference and a relative rate of change in the relative phase difference.

**[0802]** An example system for data collection, processing, and bearing analysis in an industrial environment comprising: a plurality of monitoring devices, each comprising: a data acquisition circuit structured to interpret a plurality of detection values, each of the plurality of detection values corresponding to at least one of a plurality of input sensors communicatively coupled to the data acquisition circuit; a

data storage for storing specifications and anticipated state information for a plurality of bearing types and buffering the plurality of detection values for a predetermined length of time;

a bearing analysis circuit structured to analyze buffered detection values relative to specifications and anticipated state information resulting in a bearing performance parameter; a communication circuit structured to communicate with a remote server providing the life prediction and a portion of the buffered detection values to the remote server; and a monitoring application on the remote server structured to receive, store and jointly analyze a subset of the detection values from the plurality of monitoring devices.

**[0803]** In certain further embodiments, an example monitoring device further includes one or more of: a response circuit to perform at least one operation in response to the bearing performance parameter, wherein the plurality of input sensors includes at least two sensors selected from the group consisting of a temperature sensor, a load sensor, an optical vibration sensor, an acoustic wave sensor, a heat flux sensor, an infrared sensor, an accelerometer, a tri-axial vibration sensor and a tachometer; wherein the at least one operation is further in response to at least one of: a change in amplitude of at least one of the plurality of detection values; a change in frequency or relative phase of at least one of the plurality of detection values; a rate of change in both amplitude and relative phase of at least one the plurality of detection values; and a relative rate of change in amplitude and relative phase of at least one the plurality of detection values; wherein the at least one operation comprises issuing an alert; wherein the alert may be one of haptic, audible and visual; wherein the at least one operation further comprises storing additional data in the data storage circuit; wherein storing additional data in the data storage circuit is further in response to at least one of: a change in the relative phase difference and a relative rate of change in the relative phase difference.

**[0804]** An example system for data collection, processing, and bearing analysis in an industrial environment includes: a plurality of monitoring devices, each monitoring device comprising: a data acquisition circuit structured to interpret a plurality of detection values, each of the plurality of detection values corresponding to at least one of a plurality of input sensors communicatively coupled to the data acquisition circuit; a streaming circuit for streaming at least a subset of the acquired detection values to a remote learning system; and a remote learning system including a bearing analysis circuit structured to analyze the detection values relative to a machine-based understanding of the state of the at least one bearing.

**[0805]** In certain further embodiments, an example system further includes one or more of: wherein the machine-based understanding is developed based on a model of the bearing that determines a state of the at least one bearing based at least in part on the relationship of the behavior of the bearing to an operating frequency of a component of the industrial machine; wherein the state of the at least one bearing is at least one of an operating state, a health state, a predicted lifetime state and a fault state; wherein the machine-based understanding is developed based by providing inputs to a deep learning machine, wherein the inputs comprise a plurality of streams of detection values for a plurality of bearings and a plurality of measured state values for the plurality of bearings; wherein the state of the at least one bearing is at least one of an operating state, a health state, a predicted lifetime state and a fault state.

**[0806]** An example method of analyzing bearings and sets of bearings, includes: receiving a plurality of detection values corresponding to data from a temperature sensor, a vibration sensor positioned near the bearing or set of bearings and a tachometer to measure rotation of a shaft associated with the bearing or set of bearings; comparing the detection values corresponding to the temperature sensor to a predetermined maximum level; filtering the detection values corresponding to the vibration sensor through a high pass filter where the filter is selected to eliminate vibrations associated with detection values associated with the tachometer; identifying rapid changes in at least one of a temperature peak and a vibration peak; identifying frequencies at which spikes in the filtered detection values corresponding to the vibration sensor occur and comparing frequencies and spikes in amplitude relative to an anticipated state information and specification associated with the bearing or set of bearings; and determining a bearing health parameter.

**[0807]** An example device for monitoring roller bearings in an industrial environment, includes: a data acquisition circuit structured to interpret a plurality of detection values, each of the plurality of detection values corresponding to at least one of a plurality of input sensors communicatively coupled to the data acquisition circuit; a data storage circuit structured to store specifications and anticipated state information for a plurality of types of roller bearings and buffering the plurality of detection values for a predetermined length of time; a bearing analysis circuit structured to analyze buffered detection values relative to specifications and anticipated state information resulting in a bearing performance parameter; and

a response circuit to perform at least one operation in response to the bearing performance prediction, wherein the plurality of input sensors includes at least two sensors selected from the group consisting of a temperature sensor, a load sensor, an optical vibration sensor, an acoustic wave sensor, a heat flux sensor, an infrared sensor, an accelerometer, a tri-axial vibration sensor and a tachometer.

**[0808]** An example device for monitoring sleeve bearings in an industrial environment, includes: a data acquisition circuit structured to interpret a plurality of detection values, each of the plurality of detection values corresponding to at least one of a plurality of input sensors communicatively coupled to the data acquisition circuit; a data storage for storing sleeve bearing specifications and anticipated state information for types of sleeve bearings and buffering the plurality of detection values for a predetermined length of time; a bearing analysis circuit structured to analyze buffered detection values relative to specifications and anticipated state information resulting in a bearing performance parameter; and

a response circuit to perform at least one operation in response to the bearing performance parameter, wherein the plurality of input sensors includes at least two sensors selected from the group consisting of a temperature sensor, a load sensor, an optical vibration sensor, an acoustic wave sensor, a heat flux sensor, an infrared sensor, an accelerometer, a tri-axial vibration sensor and a tachometer.

**[0809]** An example system for monitoring pump bearings in an industrial environment, includes: a data acquisition circuit structured to interpret a plurality of detection values, each of the plurality of detection values corresponding to at

least one of a plurality of input sensors communicatively coupled to the data acquisition circuit; a data storage for storing pump specifications, bearing specifications, anticipated state information for pump bearings and buffering the plurality of detection values for a predetermined length of time; a bearing analysis circuit structured to analyze buffered detection values relative to specifications and anticipated state information resulting in a bearing performance parameter; and

a response circuit to perform at least one operation in response to the bearing performance parameter, wherein the plurality of input sensors includes at least two sensors selected from the group consisting of a temperature sensor, a load sensor, an optical vibration sensor, an acoustic wave sensor, a heat flux sensor, an infrared sensor, an accelerometer, a tri-axial vibration sensor and a tachometer.

**[0810]** An example system for collection, processing, and analyzing pump bearings in an industrial environment includes: a plurality of monitoring devices, each comprising: a data acquisition circuit structured to interpret a plurality of detection values, each of the plurality of detection values corresponding to at least one of a plurality of input sensors communicatively coupled to the data acquisition circuit; a data storage for storing pump specifications, bearing specifications, anticipated state information for pump bearings and buffering the plurality of detection values for a predetermined length of time; a bearing analysis circuit structured to analyze buffered detection values relative to the pump and bearing specifications and anticipated state information resulting in a bearing performance parameter; a communication circuit structured to communicate with a remote server providing the bearing performance parameter and a portion of the buffered detection values to the remote server; and a monitoring application on the remote server structured to receive, store and jointly analyze a subset of the detection values from the plurality of monitoring devices.

**[0811]** An example system for estimating a conveyor health parameter, includes: a data acquisition circuit structured to interpret a plurality of detection values, each of the plurality of detection values corresponding to at least one of a plurality of input sensors, wherein the plurality of input sensors comprises at least one of an angular position sensor, an angular velocity sensor and an angular acceleration sensor positioned to measure the rotating component; a data storage circuit structured to store specifications, system geometry, and anticipated state information for the conveyor and associated rotating components, store historical conveyor and component performance and buffer the plurality of detection values for a predetermined length of time; a bearing analysis circuit structured to analyze buffered detection values relative to specifications and anticipated state information resulting in a bearing performance parameter; and

a system analysis circuit structured to utilize the bearing performance and at least one of an anticipated state, historical data and a system geometry to estimate a conveyor health performance.

An example system for estimating an agitator health parameter, includes: a data acquisition circuit structured to interpret a plurality of detection values, each of the plurality of detection values corresponding to at least one of a plurality of input sensors, wherein the plurality of input sensors comprises at least one of an angular position sensor, an angular velocity sensor and an angular acceleration sensor positioned to measure the rotating component; a data storage circuit structured to store specifications, system geometry, and anticipated state information for the agitator and associated components, store historical agitator and component performance and buffer the plurality of detection values for a predetermined length of time; a bearing analysis circuit structured to analyze buffered detection values relative to specifications and anticipated state information resulting in a bearing performance parameter; and a system analysis circuit structured to utilize the bearing performance and at least one of an anticipated state, historical data and a system geometry to estimate an agitation health parameter. In certain further embodiments, an example device further includes where the agitator is one of a rotating tank mixer, a large tank mixer, a portable tank mixers, a tote tank mixer, a drum mixer, a mounted mixer and a propeller mixer.

**[0812]** An example system for estimating a vehicle steering system performance parameter, includes: a data acquisition circuit structured to interpret a plurality of detection values, each of the plurality of detection values corresponding to at least one of a plurality of input sensors, wherein the plurality of input sensors comprises at least one of an angular position sensor, an angular velocity sensor and an angular acceleration sensor positioned to measure the rotating component; a data storage circuit structured to store specifications, system geometry, and anticipated state information for the vehicle steering system, the rack, the pinion, and the steering column, store historical steering system performance and buffer the plurality of detection values for a predetermined length of time; a bearing analysis circuit structured to analyze buffered detection values relative to specifications and anticipated state information resulting in a bearing performance parameter; and

a system analysis circuit structured to utilize the bearing performance and at least one of an anticipated state, historical data and a system geometry to estimate a vehicle steering system performance parameter.

**[0813]** An example system for estimating a pump performance parameter, includes: a data acquisition circuit structured to interpret a plurality of detection values, each of the plurality of detection values corresponding to at least one of a plurality of input sensors, wherein the plurality of input sensors comprises at least one of an angular position sensor, an angular velocity sensor and an angular acceleration sensor positioned to measure the rotating component; a data storage circuit structured to store specifications, system geometry, and anticipated state information for the pump and pump components, store historical steering system performance and buffer the plurality of detection values for a predetermined length of time; a bearing analysis circuit structured to analyze buffered detection values relative to specifications and anticipated state information resulting in a bearing performance parameter; a system analysis circuit structured to utilize the bearing performance and at least one of an anticipated state, historical data and a system geometry to estimate a pump performance parameter. In certain embodiments, and example system further includes wherein the pump is a water pump in a car, and/or wherein the pump is a mineral pump.

**[0814]** An example system for estimating a performance parameter for a drilling machine, includes: a data acquisition circuit structured to interpret a plurality of detection values, each of the plurality of detection values corresponding to at least one of a plurality of input sensors, wherein the plurality

of input sensors comprises at least one of an angular position sensor, an angular velocity sensor and an angular acceleration sensor positioned to measure the rotating component; a data storage circuit structured to store specifications, system geometry, and anticipated state information for the drilling machine and drilling machine components, store historical drilling machine performance and buffer the plurality of detection values for a predetermined length of time; a bearing analysis circuit structured to analyze buffered detection values relative to specifications and anticipated state information resulting in a bearing performance parameter; and

a system analysis circuit structured to utilize the bearing performance and at least one of an anticipated state, historical data and a system geometry to estimate a performance parameter for the drilling machine. In certain further embodiments, the drilling machine is one of an oil drilling machine and a gas drilling machine.

**[0815]** An example system for estimating a performance parameter for a drilling machine, includes: a data acquisition circuit structured to interpret a plurality of detection values, each of the plurality of detection values corresponding to at least one of a plurality of input sensors, wherein the plurality of input sensors comprises at least one of an angular position sensor, an angular velocity sensor and an angular acceleration sensor positioned to measure the rotating component; a data storage circuit structured to store specifications, system geometry, and anticipated state information for the drilling machine and drilling machine components, store historical drilling machine performance and buffer the plurality of detection values for a predetermined length of time; a bearing analysis circuit structured to analyze buffered detection values relative to specifications and anticipated state information resulting in a bearing performance parameter; and a system analysis circuit structured to utilize bearing performance and at least one of an anticipated state, historical data and a system geometry to estimate a performance parameter for the drilling machine.

**[0816]** Rotating components are used throughout many different types of equipment and applications. Rotating components may include shafts, motors, rotors, stators, bearings, fins, vanes, wings, blades, fans, bearings, wheels, hubs, spokes, balls, rollers, pins, gears and the like. In embodiments, information about the health or other status or state information of or regarding a rotating component in a piece of industrial equipment or in an industrial process may be obtained by monitoring the condition of the component or various other components of the industrial equipment or industrial process and identifying torsion on the component. Monitoring may include monitoring the amplitude and phase of a sensor signal, such as one measuring attributes such as angular position, angular velocity, angular acceleration, and the like.

**[0817]** An embodiment of a data monitoring device **9400** is shown in FIG. **93** and may include a plurality of sensors **9406** communicatively coupled to a controller **9402**. The controller **9402** may include a data acquisition circuit **9404**, a data storage circuit **9414**, a system evaluation circuit **9408** and, optionally, a response circuit **9410**. The system evaluation circuit **9408** may comprise a torsion analysis circuit **9412**.

**[0818]** The plurality of sensors **9406** may be wired to ports on the data acquisition circuit **9404**. The plurality of sensors **9406** may be wirelessly connected to the data acquisition circuit **9404**. The data acquisition circuit **9404** may be able to access detection values corresponding to the output of at least one of the plurality of sensors **9406** where the sensors **9406** may be capturing data on different operational aspects of a bearing or piece of equipment or infrastructure.

**[0819]** The selection of the plurality of sensors **9406** for a data monitoring device **9400** designed to assess torsion on a component, such as a shaft, motor, rotor, stator, bearing or gear, or other component described herein, or a combination of components, such as within or comprising a drive train or piece of equipment or system, may depend on a variety of considerations such as accessibility for installing new sensors, incorporation of sensors in the initial design, anticipated operational and failure conditions, reliability of the sensors, and the like. The impact of failure may drive the extent to which a bearing or piece of equipment is monitored with more sensors and/or higher capability sensors being dedicated to systems where unexpected or undetected bearing failure would be costly or have severe consequences. To assess torsion the sensors may include, among other options, an angular position sensor and/or an angular velocity sensor and/or an angular acceleration sensor.

**[0820]** The system evaluation circuit **9408** may process the detection values to obtain information about one or more rotating components being monitored. The torsional analysis circuit **9412** may be structured to identify torsion in a component or system, such as based on anticipated state, historical state, system geometry and the like, such as that which is available from the data storage circuit **9414**. The torsional analysis circuit **9412** may be structured to identify torsion using a variety of techniques such as amplitude, phase and frequency differences in the detection values from two linear accelerometers positioned at different locations on a shaft. The torsional analysis circuit **9412** may identify torsion using the difference in amplitude and phase between an angular accelerometer on a shaft and an angular accelerometer on a slip ring on the end of the shaft. The torsional analysis circuit **9412** may identify shear stress/elongation on a component using two strain gauges in a half bridge configuration or four strain gauges in a full bridge configuration. The torsional analysis circuit **9412** may use coder based techniques such as markers to identify the rotation of a shaft, bearing, rotor, stator, gear or other rotating component. The markers being assessed may include visual markers such as gear teeth or stripes on a shaft captured by an image sensor, light detector or the like. The markers being assessed may include magnetic components located on the rotating component and sensed by an electromagnetic pickup. The sensor may be a Hall Effect sensor.

**[0821]** Additional input sensors may include a thermometer, a heat flux sensor, a magnetometer, an axial load sensor, a radial load sensor, an accelerometer, a shear-stress torque sensor, a twist angle sensor and the like. Twist angle may include rotational information at two positions on shaft or an angular velocity or angular acceleration at two positions on a shaft. In embodiments, the sensors may be positioned at different ends of the shaft.

**[0822]** The torsional analysis circuit **9412** may include one or more of a transient signal analysis circuit and/or a frequency transformation circuit and/or a frequency analysis circuit as described elsewhere herein.

**[0823]** In embodiments, the transitory signal analysis circuit for torsional analysis may include envelope modulation analysis, and other transitory signal analysis techniques. The

system evaluation circuit **9408** may store long stream of detection values to the data storage circuit **9414**. The transitory signal analysis circuit may use envelope analysis techniques on those long streams of detection values to identify transient effects (such as impacts) which may not be identified by conventional sine wave analysis (such as FFTs).

**[0824]** In embodiments, the frequencies of interest may include identifying energy at relation-order bandwidths for rotating equipment. The maximum order observed may comprise a function of the bandwidth of the system and the rotational speed of the component. For varying speeds (run-ups, run-downs, etc.), the minimum RPM may determine the maximum-observed order. In embodiments, there may be torsional resonance at harmonics of the forcing frequency/frequency at which a component is being driven.

**[0825]** In an illustrative and non-limiting example, the monitoring device may be used to collect and process sensor data to measure torsion on a component. The monitoring device may be in communication with or include a high resolution, high speed vibration sensor to collect data over an extended period of time, enough to measure multiple cycles of rotation. For gear driven equipment, the sampling resolution should be such that the number of samples taken per cycle is at least equal to the number of gear teeth driving the component. It will be understood that a lower sampling resolution may also be utilized, which may result in a lower confidence determination and/or taking data over a longer period of time to develop sufficient statistical confidence. This data may then be used in the generation of a phase reference (relative probe) or tachometer signal for a piece of equipment. This phase reference may be used to align phase data such as velocity and/or positional and/or acceleration data from multiple sensors located at different positions on a component or on different components within a system. This information may facilitate the determination of torsion for different components or the generation of an Operational Deflection Shape ("ODS"), indicating the extent of torsion on one or more components during an operational mode.

**[0826]** The higher resolution data stream may provide additional data for the detection of transitory signals in low speed operations. The identification of transitory signals may enable the identification of defects in a piece of equipment or component.

**[0827]** In an illustrative and non-limiting example, the monitoring device may be used to identify mechanical jitter for use in failure prediction models. The monitoring device may begin acquiring data when the piece of equipment starts up through ramping up to operating speed or during operation. Once at operating speed, it is anticipated that the torsional jitter should be minimal and changes in torsion during this phase may be indicative of cracks, bearing faults and the like. Additionally, known torsions may be removed from the signal to facilitate the identification of unanticipated torsions resulting from system design flaws or component wear. Having phase information associated with the data collected at operating speed may facilitate identification of a location of vibration and potential component wear. Relative phase information for a plurality of sensors located throughout a machine may facilitate the evaluation of torsion as it is propagated through a piece of equipment.

**[0828]** Based on the output of its various components, the system evaluation circuit **9408** may make a component life prediction, identify a component health parameter, identify a component performance parameter, and the like. The system evaluation circuit **9408** may identify unexpected torsion on a rotating component, identify strain/stress of flexure bearings, and the like. The system evaluation circuit **9408** may identify optimal operation parameters for a piece of equipment to reduce torsion and extend component life. The system evaluation circuit **9408** may identify torsion at selected operational frequencies (e.g., shaft rotation rates). Information about operational frequencies causing torsion may facilitate equipment operational balance in the future.

**[0829]** The system evaluation circuit **9408** may communicate with the data storage circuit **9414** to access equipment specifications, equipment geometry, bearing specifications, component materials, anticipated state information for a plurality of component types, operational history, historical detection values, and the like for use in assessing the output of its various components. The system evaluation circuit **9408** may buffer a subset of the plurality of detection values, intermediate data such as time-based detection values, time-based detection values transformed to frequency information, filtered detection values, identified frequencies of interest, and the like for a predetermined length of time. The system evaluation circuit **9408** may periodically store certain detection values in the data storage circuit **9414** to enable the tracking of component performance over time. In embodiments, based on relevant operating conditions and/or failure modes, which may occur as detection values approach one or more criteria, the system evaluation circuit **9408** may store data in the data storage circuit **9414** based on the fit of data relative to one or more criteria, such as those described throughout this disclosure. Based on one sensor input meeting or approaching specified criteria or range, the system evaluation circuit **9408** may store additional data such as RPM information, component loads, temperatures, pressures, vibrations or other sensor data of the types described throughout this disclosure in the data storage circuit **9414**. The system evaluation circuit **9408** may store data in the data storage circuit at a higher data rate for greater granularity in future processing, the ability to reprocess at different sampling rates, and/or to enable diagnosing or post-processing of system information where operational data of interest is flagged, and the like.

**[0830]** Depending on the type of equipment, the component being measured, the environment in which the equipment is operating and the like, sensors **9406** may comprise, without limitation, one or more of the following: a displacement sensor, an angular velocity sensor, an angular accelerometer, a vibration sensor, an optical vibration sensor, a thermometer, a hygrometer, a voltage sensor, a current sensor, an accelerometer, a velocity detector, a light or electromagnetic sensor (e.g., determining temperature, composition and/or spectral analysis, and/or object position or movement), an image sensor, a structured light sensor, a laser-based image sensor, an infrared sensor, an acoustic wave sensor, a heat flux sensor, a displacement sensor, a turbidity meter, a viscosity meter, a load sensor, a tri-axial vibration sensor, an accelerometer, a tachometer, a fluid pressure meter, an air flow meter, a horsepower meter, a flow rate meter, a fluid particle detector, an acoustical sensor, a pH sensor, and the like, including, without limitation, any of the sensors described throughout this disclosure and the documents incorporated by reference.

**[0831]** The sensors **9406** may provide a stream of data over time that has a phase component, such as relating to

angular velocity, angular acceleration or vibration, allowing for the evaluation of phase or frequency analysis of different operational aspects of a piece of equipment or an operating component. The sensors **9406** may provide a stream of data that is not conventionally phase-based, such as temperature, humidity, load, and the like. The sensors **9406** may provide a continuous or near continuous stream of data over time, periodic readings, event-driven readings, and/or readings according to a selected interval or schedule.

**[0832]** In an illustrative and non-limiting example, when assessing engine components it may be desirable to remove vibrations due to the timing of piston vibrations or anticipated vibrational input due to crankshaft geometry to assist in identifying other torsional forces on a component. This may assist in assessing the health of such diverse components as a water pump in a vehicle or positive displacement pumps.

**[0833]** In an illustrative and non-limiting example, torsional analysis and the identification of variations in torsion may assist in the identification of stick-slip in a gear or transfer system. In some cases, this may only occur once per cycle, and phase information may be as important as or more important than the amplitude of the signal in determining system state or behavior.

**[0834]** In an illustrative and non-limiting example, torsional analysis may assist in the identification, prediction (e.g., timing) and evaluation of lash in a drive train and the follow-on torsion resulting from a change in direction or start up, which in turn may be used for controlling a system, assessing needs for maintenance, assessing needs for balancing or otherwise re-setting components, or the like.

**[0835]** In an illustrative and non-limiting example, when assessing compressors, it may be desirable to remove vibrations due to the timing of piston vibrations or anticipated vibrational input associated with the techniques and geometry used for positive displacement compressors to assist in identifying other torsional forces on a component. This may assist in assessing the health of compressors in such diverse environments as air conditioning units in factories, compressors in gas handling systems in an industrial environment, compressors in oil fields, and other environments as described elsewhere herein.

**[0836]** In an illustrative and non-limiting example, torsional analysis may facilitate the understanding of the health and expected life of various components associated with the drive trains of vehicles, such as cranes, bulldozers, tractors, haulers, backhoes, forklifts, agricultural equipment, mining equipment, boring and drilling machines, digging machines, lifting machines, mixers (e.g., cement mixers), tank trucks, refrigeration trucks, security vehicles (e.g., including safes and similar facilities for preserving valuables), underwater vehicles, watercraft, aircraft, automobiles, trucks, trains and the like, as well as drive trains of moving apparatus, such as assembly lines, lifts, cranes, conveyors, hauling systems, and others. The evaluation of the sensor data with the model of the system geometry and operating conditions may be useful in identifying unexpected torsion and the transmission of that torsion from the motor and drive shaft, from the drive shaft to the universal joint and from the universal joint to one or more wheel axles.

**[0837]** In an illustrative and non-limiting example, torsional analysis may facilitate in the understanding of the health and expected life of various components associated with train/tram wheels and wheel sets. As discussed above, torsional analysis may facilitate in the identification of stick-slip between the wheels or wheel sets and the rail. The torsional analysis in view of the system geometry may facilitate the identification of torsional vibration due to stick-slip as opposed to the torsional vibration due to the driving geometry connecting the engine to the drive shaft to the wheel axle.

**[0838]** In embodiments, as illustrated in FIG. **93**, the sensors **9406** may be part of the data monitoring device **9400**, referred to herein in some cases as a data collector, which in some cases may comprise a mobile or portable data collector. In embodiments, as illustrated in FIGS. **94** and **95**, one or more external sensors **9422**, which are not explicitly part of a monitoring device **9416** but rather are new, previously attached to or integrated into the equipment or component, may be opportunistically connected to or accessed by the monitoring device **9416**. The monitoring device **9416** may include a controller **9418**. The controller **9418** may include a data acquisition circuit **9420**, a data storage circuit **9414**, a system evaluation circuit **9408** and, optionally, a response circuit **9410**. The system evaluation circuit **9408** may comprise a torsional analysis circuit **9412**. The data acquisition circuit **9420** may include one or more input ports **9424**. In embodiments as shown in FIG. **95**, a data acquisition circuit **9420** may further comprise a wireless communications circuit **9426**. The one or more external sensors **9422** may be directly connected to the one or more input ports **9424** on the data acquisition circuit **9420** of the controller **9418** or may be accessed by the data acquisition circuit **9420** wirelessly using the wireless communications circuit **9426**, such as by a reader, interrogator, or other wireless connection, such as over a short-distance wireless protocol. The data acquisition circuit **9420** may use the wireless communications circuit **9426** to access detection values corresponding to the one or more external sensors **9422** wirelessly or via a separate source or some combination of these methods.

**[0839]** In embodiments, as illustrated in FIG. **96**, the data acquisition circuit **9432** may further comprise a multiplexer circuit **9434** as described elsewhere herein. Outputs from the multiplexer circuit **9434** may be utilized by the system evaluation circuit **9408**. The response circuit **9410** may have the ability to turn on or off portions of the multiplexor circuit **9434**. The response circuit **9410** may have the ability to control the control channels of the multiplexor circuit **9434**

**[0840]** The response circuit **9410** may initiate actions based on a component performance parameter, a component health value, a component life prediction parameter, and the like. The response circuit **9410** may evaluate the results of the system evaluation circuit **9408** and, based on certain criteria or the output from various components of the system evaluation circuit **9408**, may initiate an action. The criteria may include identification of torsion on a component by the torsional analysis circuit. The criteria may include a sensor's detection values at certain frequencies or phases relative to a timer signal where the frequencies or phases of interest may be based on the equipment geometry, equipment control schemes, system input, historical data, current operating conditions, and/or an anticipated response. The criteria may include a sensor's detection values at certain frequencies or phases relative to detection values of a second sensor. The criteria may include signal strength at certain resonant frequencies/harmonics relative to detection values associated with a system tachometer or anticipated based on

equipment geometry and operation conditions. Criteria may include a predetermined peak value for a detection value from a specific sensor, a cumulative value of a sensor's corresponding detection value over time, a change in peak value, a rate of change in a peak value, and/or an accumulated value (e.g., a time spent above/below a threshold value, a weighted time spent above/below one or more threshold values, and/or an area of the detected value above/below one or more threshold values). The criteria may comprise combinations of data from different sensors such as relative values, relative changes in value, relative rates of change in value, relative values over time, and the like. The relative criteria may change with other data or information such as process stage, type of product being processed, type of equipment, ambient temperature and humidity, external vibrations from other equipment, and the like. The relative criteria may be reflected in one or more calculated statistics or metrics (including ones generated by further calculations on multiple criteria or statistics), which in turn may be used for processing (such as on board a data collector or by an external system), such as to be provided as an input to one or more of the machine learning capabilities described in this disclosure, to a control system (which may be on board a data collector or remote, such as to control selection of data inputs, multiplexing of sensor data, storage, or the like), or as a data element that is an input to another system, such as a data stream or data package that may be available to a data marketplace, a SCADA system, a remote control system, a maintenance system, an analytic system, or other system.

**[0841]** Certain embodiments are described herein as detected values exceeding thresholds or predetermined values, but detected values may also fall below thresholds or predetermined values—for example where an amount of change in the detected value is expected to occur, but detected values indicate that the change may not have occurred. Except where the context clearly indicates otherwise, any description herein describing a determination of a value above a threshold and/or exceeding a predetermined or expected value is understood to include determination of a value below a threshold and/or falling below a predetermined or expected value.

**[0842]** The predetermined acceptable range may be based on anticipated torsion based on equipment geometry, the geometry of a transfer system, an equipment configuration or control scheme, such as a piston firing sequence, and the like. The predetermined acceptable range may also be based on historical performance or predicted performance, such as long term analysis of signals and performance both from the past run and from the past several runs. The predetermined acceptable range may also be based on historical performance or predicted performance, or based on long term analysis of signals and performance across a plurality of similar equipment and components (both within a specific environment, within an individual company, within multiple companies in the same industry and across industries). The predetermined acceptable range may also be based on a correlation of sensor data with actual equipment and component performance.

**[0843]** In some embodiments, an alert may be issued based on some of the criteria discussed above. In embodiments, the relative criteria for an alarm may change with other data or information, such as process stage, type of product being processed on equipment, ambient temperature and humidity, external vibrations from other equipment and the like. In an illustrative and non-limiting example, the response circuit **9410** may initiate an alert if a torsion in a component across a plurality of components exceeds a predetermined maximum value, if there is a change or rate of change that exceeds a predetermined acceptable range, and/or if an accumulated value based on torsion amplitude and/or frequency exceeds a threshold.

**[0844]** In embodiments, response circuit **9410** may cause the data acquisition circuit **9432** to enable or disable the processing of detection values corresponding to certain sensors based on some of the criteria discussed above. This may include switching to sensors having different response rates, sensitivity, ranges, and the like; accessing new sensors or types of sensors, and the like. Switching may be undertaken based on a model, a set of rules, or the like. In embodiments, switching may be under control of a machine learning system, such that switching is controlled based on one or more metrics of success, combined with input data, over a set of trials, which may occur under supervision of a human supervisor or under control of an automated system. Switching may involve switching from one input port to another (such as to switch from one sensor to another). Switching may involve altering the multiplexing of data, such as combining different streams under different circumstances. Switching may involve activating a system to obtain additional data, such as moving a mobile system (such as a robotic or drone system), to a location where different or additional data is available (such as positioning an image sensor for a different view or positioning a sonar sensor for a different direction of collection) or to a location where different sensors can be accessed (such as moving a collector to connect up to a sensor that is disposed at a location in an environment by a wired or wireless connection). This switching may be implemented by changing the control signals for a multiplexor circuit **9434** and/or by turning on or off certain input sections of the multiplexor circuit **9434**.

**[0845]** The response circuit **9410** may calculate transmission effectiveness based on differences between a measured and theoretical angular position and velocity of an output shaft after accounting for the gear ration and any phase differential between input and output.

**[0846]** The response circuit **9410** may identify equipment or components that are due for maintenance. The response circuit **9410** may make recommendations for the replacement of certain sensors in the future with sensors having different response rates, sensitivity, ranges, and the like. The response circuit **9410** may recommend design alterations for future embodiments of the component, the piece of equipment, the operating conditions, the process, and the like.

**[0847]** In embodiments, the response circuit **9410** may recommend maintenance at an upcoming process stop or initiate a maintenance call. The response circuit **9410** may recommend changes in process or operating parameters to remotely balance the piece of equipment. In embodiments, the response circuit **9410** may implement or recommend process changes—for example to lower the utilization of a component that is near a maintenance interval, operating off-nominally, or failed for purpose but still at least partially operational, to change the operating speed of a component (such as to put it in a lower-demand mode), to initiate amelioration of an issue (such as to signal for additional lubrication of a roller bearing set, or to signal for an alignment process for a system that is out of balance), and the like.

**[0848]** In embodiments as shown in FIGS. **97**, **98**, **99**, and **100**, a data monitoring system **9460** may include at least one data monitoring device **9448**. At least one data monitoring device **9448** may include sensors **9406** and a controller **9438** comprising a data acquisition circuit **9404**, a system evaluation circuit **9408**, a data storage circuit **9414**, and a communications circuit **9442**. The system evaluation circuit **9408** may include a torsional analysis circuit **9412**. There may also be an optional response circuit as described above and elsewhere herein. The system evaluation circuit **9408** may periodically share data with the communication circuit **9442** for transmittal to the remote server **9440** to enable the tracking of component and equipment performance over time and under varying conditions by a monitoring application **9446**. Because relevant operating conditions and/or failure modes may occur as sensor values approach one or more criteria, the system evaluation circuit **9408** may share data with the communication circuit **9462** for transmittal to the remote server **9440** based on the fit of data relative to one or more criteria. Based on one sensor input meeting or approaching specified criteria or range, the system evaluation circuit **9408** may share additional data such as RPMs, component loads, temperatures, pressures, vibrations, and the like for transmittal. The system evaluation circuit **9408** may share data at a higher data rate for transmittal to enable greater granularity in processing on the remote server. In embodiments, as shown in FIG. **97**, the communications circuit **9442** may communicate data directly to a remote server **9440**. In embodiments, as shown in FIG. **98**, the communications circuit **9442** may communicate data to an intermediate computer **9450** which may include a processor **9452** running an operating system **9454** and a data storage circuit **9456**.

**[0849]** In embodiments, as illustrated in FIGS. **99** and **100**, a data collection system **9458** may have a plurality of monitoring devices **9448** collecting data on multiple components in a single piece of equipment, collecting data on the same component across a plurality of pieces of equipment (both the same and different types of equipment) in the same facility as well as collecting data from monitoring devices in multiple facilities. A monitoring application **9446** on a remote server **9440** may receive and store one or more of detection values, timing signals and data coming from a plurality of the various monitoring devices **9448**. In embodiments, as shown in FIG. **99**, the communications circuit **9442** may communicate data directly to a remote server **9440**. In embodiments, as shown in FIG. **100**, the communications circuit **9442** may communicate data to an intermediate computer **9450**, which may include a processor **9452** running an operating system **9454** and a data storage circuit **9456**. There may be an individual intermediate computer **9450** associated with each monitoring device **9264** or an individual intermediate computer **9450** may be associated with a plurality of monitoring devices **9448** where the intermediate computer **9450** may collect data from a plurality of data monitoring devices and send the cumulative data to the remote server **9440**.

**[0850]** The monitoring application **9446** may select subsets of detection values, timing signals, data, product performance and the like to be jointly analyzed. Subsets for analysis may be selected based on component type, component materials, or a single type of equipment in which a component is operating. Subsets for analysis may be selected or grouped based on common operating conditions or operational history such as size of load, operational condition (e.g., intermittent, continuous), operating speed or tachometer, common ambient environmental conditions such as humidity, temperature, air or fluid particulate, and the like. Subsets for analysis may be selected based on common anticipated state information. Subsets for analysis may be selected based on the effects of other nearby equipment such as nearby machines rotating at similar frequencies, nearby equipment producing electromagnetic fields, nearby equipment producing heat, nearby equipment inducing movement or vibration, nearby equipment emitting vapors, chemicals or particulates, or other potentially interfering or intervening effects.

**[0851]** The monitoring application **9446** may analyze a selected subset. In an illustrative example, data from a single component may be analyzed over different time periods such as one operating cycle, cycle to cycle comparisons, trends over several operating cycles/time such as a month, a year, the life of the component or the like. Data from multiple components of the same type may also be analyzed over different time periods. Trends in the data such as changes in frequency or amplitude may be correlated with failure and maintenance records associated with the same component or piece of equipment. Trends in the data such as changing rates of change associated with start-up or different points in the process may be identified. Additional data may be introduced into the analysis such as output product quality, output quantity (such as per unit of time), indicated success or failure of a process, and the like. Correlation of trends and values for different types of data may be analyzed to identify those parameters whose short-term analysis might provide the best prediction regarding expected performance. The analysis may identify model improvements to the model for anticipated state information, recommendations around sensors to be used, positioning of sensors and the like. The analysis may identify additional data to collect and store. The analysis may identify recommendations regarding needed maintenance and repair and/or the scheduling of preventative maintenance. The analysis may identify recommendations around purchasing replacement components and the timing of the replacement of the components. The analysis may identify recommendations regarding future geometry changes to reduce torsion on components. The analysis may result in warning regarding dangers of catastrophic failure conditions. This information may be transmitted back to the monitoring device to update types of data collected and analyzed locally or to influence the design of future monitoring devices.

**[0852]** In embodiments, the monitoring application **9446** may have access to equipment specifications, equipment geometry, component specifications, component materials, anticipated state information for a plurality of component types, operational history, historical detection values, component life models and the like for use analyzing the selected subset using rule-based or model-based analysis. In embodiments, the monitoring application **9446** may feed a neural net with the selected subset to learn to recognize various operating states, health states (e.g., lifetime predictions) and fault states utilizing deep learning techniques. In embodiments, a hybrid of the two techniques (model-based learning and deep learning) may be used.

**[0853]** In an illustrative and non-limiting example, the health of the rotating components on conveyors and lifters in an assembly line may be monitored using the torsional

analysis techniques, data monitoring devices and data collection systems described herein.

**[0854]** In an illustrative and non-limiting example, the health the rotating components in water pumps on industrial vehicles may be monitored using the torsional analysis techniques, data monitoring devices and data collection systems described herein.

**[0855]** In an illustrative and non-limiting example, the health of rotating components in compressors in gas handling systems may be monitored using the data monitoring devices and data collection systems described herein.

**[0856]** In an illustrative and non-limiting example, the health of the rotating components in compressors situated in the gas and oil fields may be monitored using the data monitoring devices and data collection systems described herein.

**[0857]** In an illustrative and non-limiting example, the health of the rotating components in factory air conditioning units may be evaluated using the techniques, data monitoring devices and data collection systems described herein.

**[0858]** In an illustrative and non-limiting example, the health of the rotating components in factory mineral pumps may be evaluated using the techniques, data monitoring devices and data collection systems described herein.

**[0859]** In an illustrative and non-limiting example, the health of the rotating components such as shafts, bearings, and gears in drilling machines and screw drivers situated in the oil and gas fields may be evaluated using the torsional analysis techniques, data monitoring devices and data collection systems described herein.

**[0860]** In an illustrative and non-limiting example, the health of rotating components such as shafts, bearings, gears, and rotors of motors situated in the oil and gas fields may be evaluated using the torsional analysis techniques, data monitoring devices and data collection systems described herein.

**[0861]** In an illustrative and non-limiting example, the health of rotating components such as blades, screws and other components of pumps situated in the oil and gas fields may be evaluated using the torsional analysis techniques, data monitoring devices and data collection systems described herein.

**[0862]** In an illustrative and non-limiting example, the health of rotating components such as shafts, bearings, motors, rotors, stators, gears, and other components of vibrating conveyors situated in the oil and gas fields may be evaluated using the torsional analysis techniques, data monitoring devices and data collection systems described herein.

**[0863]** In an illustrative and non-limiting example, the health of rotating components such as bearings, shafts, motors, rotors, stators, gears, and other components of mixers situated in the oil and gas fields may be evaluated using the torsional analysis techniques, data monitoring devices and data collection systems described herein.

**[0864]** In an illustrative and non-limiting example, the health of rotating components such as bearings, shafts, motors, rotors, stators, gears, and other components of centrifuges situated in oil and gas refineries may be evaluated using the torsional analysis techniques, data monitoring devices and data collection systems described herein.

**[0865]** In an illustrative and non-limiting example, the health of rotating components such as bearings, shafts, motors, rotors, stators, gears, and other components of refining tanks situated in oil and gas refineries may be evaluated using the torsional analysis techniques, data monitoring devices and data collection systems described herein.

**[0866]** In an illustrative and non-limiting example, the health of rotating components such as bearings, shafts, motors, rotors, stators, gears, and other components of rotating tank/mixer agitators to promote chemical reactions deployed in chemical and pharmaceutical production lines may be evaluated using the torsional analysis techniques, data monitoring devices and data collection systems described herein.

**[0867]** In an illustrative and non-limiting example, the health of rotating components such as bearings, shafts, motors, rotors, stators, gears, and other components of mechanical/rotating agitators to promote chemical reactions deployed in chemical and pharmaceutical production lines may be evaluated using the torsional analysis techniques, data monitoring devices and data collection systems described herein.

**[0868]** In an illustrative and non-limiting example, the health of rotating components such as bearings, shafts, motors, rotors, stators, gears, and other components of propeller agitators to promote chemical reactions deployed in chemical and pharmaceutical production lines may be evaluated using the torsional analysis techniques, data monitoring devices and data collection systems described herein.

**[0869]** In an illustrative and non-limiting example, the health of bearings and associated shafts, motors, rotors, stators, gears, and other components of vehicle steering mechanisms may be evaluated using the torsional analysis techniques, data monitoring devices and data collection systems described herein.

**[0870]** In an illustrative and non-limiting example, the health of bearings and associated shafts, motors, rotors, stators, gears, and other components of vehicle engines may be evaluated using the torsional analysis techniques, data monitoring devices and data collection systems described herein.

**[0871]** In embodiments, a monitoring device for estimating an anticipated lifetime of a rotating component in an industrial machine may comprise a data acquisition circuit structured to interpret a plurality of detection values, each of the plurality of detection values corresponding to at least one of a plurality of input sensors, wherein the plurality of input sensors comprises at least one of an angular position sensor, an angular velocity sensor and an angular acceleration sensor positioned to measure the rotating component; a data storage circuit structured to store specifications, system geometry, and anticipated state information for a plurality of rotating components, store historical component performance and buffer the plurality of detection values for a predetermined length of time; and a torsional analysis circuit structured to utilize transitory signal analysis to analyze the buffered detection values relative to the rotating component specifications and anticipated state information resulting in the identification of torsional vibration; and a system analysis circuit structured to utilize the identified torsional vibration and at least one of an anticipated state, historical data and a system geometry to identify an anticipated lifetime of the rotating component. In embodiments, the monitoring device may further comprise a response circuit to perform at least one operation in response to the anticipated lifetime of the rotating component, wherein the plurality of input sensors includes at least two sensors selected from the group consisting of a temperature sensor, a load sensor, an optical

vibration sensor, an acoustic wave sensor, a heat flux sensor, an infrared sensor, an accelerometer, a tri-axial vibration sensor, a tachometer, and the like. At least one operation may comprise issuing at least one of an alert and a warning, storing additional data in the data storage circuit, ordering a replacement of the rotating component, scheduling replacement of the rotating component, recommending alternatives to the rotating component, and the like.

**[0872]** In embodiments, a monitoring device for evaluating the health of a rotating component in an industrial machine may comprise a data acquisition circuit structured to interpret a plurality of detection values, each of the plurality of detection values corresponding to at least one of a plurality of input sensors, wherein the plurality of input sensors comprises at least one of an angular position sensor, an angular velocity sensor and an angular acceleration sensor positioned to measure the rotating component; a data storage circuit structured to store specifications, system geometry, and anticipated state information for a plurality of rotating components, store historical component performance and buffer the plurality of detection values for a predetermined length of time; and a torsional analysis circuit structured to utilize transitory signal analysis to analyze the buffered detection values relative to the rotating component specifications and anticipated state information resulting in the identification of torsional vibration; and a system analysis circuit structured to utilize the identified torsional vibration and at least one of an anticipated state, historical data and a system geometry to identify the health of the rotating component. In embodiments, the monitoring device may further comprise a response circuit to perform at least one operation in response to the health of the rotating component. The plurality of input sensors may include at least two sensors selected from the group consisting of a temperature sensor, a load sensor, an optical vibration sensor, an acoustic wave sensor, a heat flux sensor, an infrared sensor, an accelerometer, a tri-axial vibration sensor a tachometer, and the like. The monitoring device may issue an alert and an alarm, such as the at least one operation storing additional data in the data storage circuit, ordering a replacement of the rotating component, scheduling replacement of the rotating component, recommending alternatives to the rotating component, and the like.

**[0873]** In embodiments, a monitoring device for evaluating the operational state of a rotating component in an industrial machine may comprise a data acquisition circuit structured to interpret a plurality of detection values, each of the plurality of detection values corresponding to at least one of a plurality of input sensors, wherein the plurality of input sensors comprises at least one of an angular position sensor, an angular velocity sensor and an angular acceleration sensor positioned to measure the rotating component; a data storage circuit structured to store specifications, system geometry, and anticipated state information for a plurality of rotating components, store historical component performance and buffer the plurality of detection values for a predetermined length of time; and a torsional analysis circuit structured to utilize transitory signal analysis to analyze the buffered detection values relative to the rotating component specifications and anticipated state information resulting in the identification of torsional vibration; and a system analysis circuit structured to utilize the identified torsional vibration and at least one of an anticipated state, historical data and a system geometry to identify the operational state of the rotating component. In embodiments, the operational state may be a current or future operational state. A response circuit may perform at least one operation in response to the operational state of the rotating component. The at least one operation may store additional data in the data storage circuit, order a replacement of the rotating component, schedule a replacement of the rotating component, recommending alternatives to the rotating component, and the like.

**[0874]** In embodiments, s monitoring device for evaluating the operational state of a rotating component in an industrial machine may include a data acquisition circuit structured to interpret a plurality of detection values, each of the plurality of detection values corresponding to at least one of a plurality of input sensors, wherein the plurality of input sensors comprises at least one of an angular position sensor, an angular velocity sensor and an angular acceleration sensor positioned to measure the rotating component; a data storage circuit structured to store specifications, system geometry, and anticipated state information for a plurality of rotating components, store historical component performance and buffer the plurality of detection values for a predetermined length of time; and a torsional analysis circuit structured to utilize transitory signal analysis to analyze the buffered detection values relative to the rotating component specifications and anticipated state information resulting in the identification of torsional vibration; and a system analysis circuit structured to utilize the identified torsional vibration and at least one of an anticipated state, historical data and a system geometry to identify the operational state of the rotating component, wherein the data acquisition circuit comprises a multiplexer circuit whereby alternative combinations of the detection values may be selected based on at least one of user input, a detected state and a selected operating parameter for a machine. The operational state may be a current or future operational state. The at least one operation may enable or disable one or more portions of the multiplexer circuit, or altering the multiplexer control lines. The data acquisition circuit may include at least two multiplexer circuits and the at least one operation comprises changing connections between the at least two multiplexer circuits.

**[0875]** In embodiments, a system for evaluating an operational state a rotating component in a piece of equipment may comprise a data acquisition circuit structured to interpret a plurality of detection values, each of the plurality of detection values corresponding to at least one of a plurality of input sensors, wherein the plurality of input sensors comprises at least one of an angular position sensor, an angular velocity sensor and an angular acceleration sensor positioned to measure the rotating component; a data storage circuit structured to store specifications, system geometry, and anticipated state information for a plurality of rotating components, store historical component performance and buffer the plurality of detection values for a predetermined length of time; and a torsional analysis circuit structured to utilize transitory signal analysis to analyze the buffered detection values relative to the rotating component specifications and anticipated state information resulting in identification of any torsional vibration; a system analysis circuit structured to utilize the torsional vibration and at least one of an anticipated state, historical data and a system geometry to identify the operational state of the rotating component; and a communication module enabled to communicate the operational state of the rotating component, the torsional

vibration and detection values to a remote server, wherein the detection values communicated are based partly on the operational state of the rotating component and the torsional vibration; and a monitoring application on the remote server structured to receive, store and jointly analyze a subset of the detection values from the monitoring devices. The analysis of the subset of detection values may include transitory signal analysis to identify the presence of high frequency torsional vibration. The monitoring application may be structured to subset detection values based on one of: operational state, torsional vibration, type of the rotating component, operational conditions under which detection values were measured, and type or equipment. The analysis of the subset of detection values may include feeding a neural net with the subset of detection values and supplemental information to learn to recognize various operating states, health states and fault states utilizing deep learning techniques. The supplemental information may include one of component specification, component performance, equipment specification, equipment performance, maintenance records, repair records an anticipated state model, and the like. The operational state may include a current or future operational state. The monitoring device may include a response circuit to perform at least one operation in response to the operational state of the rotating component. The at least one operation may include storing additional data in the data storage circuit.

**[0876]** In embodiments, a system for evaluating the health of a rotating component in a piece of equipment may comprise a data acquisition circuit structured to interpret a plurality of detection values, each of the plurality of detection values corresponding to at least one of a plurality of input sensors, wherein the plurality of input sensors comprises at least one of: an angular position sensor, an angular velocity sensor and an angular acceleration sensor positioned to measure the rotating component; a data storage circuit structured to store specifications, system geometry, and anticipated state information for a plurality of rotating components, store historical component performance and buffer the plurality of detection values for a predetermined length of time; and a torsional analysis circuit structured to utilize transitory signal analysis to analyze the buffered detection values relative to the rotating component specifications and anticipated state information resulting in identification of torsional vibration; a system analysis circuit structured to utilize the torsional vibration and at least one of an anticipated state, historical data and a system geometry to identify the health of the rotating component; and a communication module enabled to communicate the health of the rotating component, the torsional vibrations and detection values to a remote server, wherein the detection values communicated are based partly on the health of the rotating component and the torsional vibration; and a monitoring application on the remote server structured to receive, store and jointly analyze a subset of the detection values from the monitoring devices. In embodiments, the analysis of the subset of detection values may include transitory signal analysis to identify the presence of high frequency torsional vibration. The monitoring application may be structured to subset detection values. The analysis of the subset of detection values may include feeding a neural net with the subset of detection values and supplemental information to learn to recognize various operating states, health states and fault states utilizing deep learning techniques. The supplemental information may include one of component specification, component performance, equipment specification, equipment performance, maintenance records, repair records and an anticipated state model. The operational state may be a current or future operational state. A response circuit may perform at least one operation in response to the health of the rotating component.

**[0877]** In embodiments, a system for estimating an anticipated lifetime of a rotating component in a piece of equipment may comprise a data acquisition circuit structured to interpret a plurality of detection values, each of the plurality of detection values corresponding to at least one of a plurality of input sensors, wherein the plurality of input sensors comprises at least one of an angular position sensor, an angular velocity sensor and an angular acceleration sensor positioned to measure the rotating component; a data storage circuit structured to store specifications, system geometry, and anticipated state information for a plurality of rotating components, store historical component performance and buffer the plurality of detection values for a predetermined length of time; and a torsional analysis circuit structured to utilize transitory signal analysis to analyze the buffered detection values relative to the rotating component specifications and anticipated state information resulting in identification of torsional vibration; a system analysis circuit structured to utilize the torsional vibration and at least one of an anticipated state, historical data and a system geometry to identify an anticipated life the rotating component; and a communication module enabled to communicate the anticipated life of the rotating component, the torsional vibrations and detection values to a remote server, wherein the detection values communicated are based partly on the anticipated life of the rotating component and the torsional vibration; and a monitoring application on the remote server structured to receive, store and jointly analyze a subset of the detection values from the monitoring devices. In embodiments, the analysis of the subset of detection values may include transitory signal analysis to identify the presence of high frequency torsional vibration. The monitoring application may be structured to subset detection values based on one of anticipated life of the rotating component, torsional vibration, type of the rotating component, operational conditions under which detection values were measured, and type of equipment. The analysis of the subset of detection values may include feeding a neural net with the subset of detection values and supplemental information to learn to recognize various operating states, health states, life expectancies and fault states utilizing deep learning techniques. The supplemental information may include one of component specification, component performance, equipment specification, equipment performance, maintenance records, repair records and an anticipated state model. The monitoring device may include a response circuit to perform at least one operation in response to the anticipated life of the rotating component. The at least one operation may include one of ordering a replacement of the rotating component, scheduling replacement of the rotating component, and recommending alternatives to the rotating component.

**[0878]** In embodiments, a system for evaluating the health of a variable frequency motor in an industrial environment may comprise a data acquisition circuit structured to interpret a plurality of detection values, each of the plurality of detection values corresponding to at least one of a plurality of input sensors, wherein the plurality of input sensors

comprises at least one of an angular position sensor, an angular velocity sensor and an angular acceleration sensor positioned to measure the rotating component; a data storage circuit structured to store specifications, system geometry, and anticipated state information for a plurality of rotating components, store historical component performance and buffer the plurality of detection values for a predetermined length of time; and a torsional analysis circuit structured to utilize transitory signal analysis to analyze the buffered detection values relative to the rotating component specifications and anticipated state information resulting in identification of torsional vibration; a system analysis circuit structured to utilize the torsional vibration and at least one of an anticipated state, historical data and a system geometry to identify a motor health parameter; and a communication module enabled to communicate the motor health parameter, the torsional vibrations and detection values to a remote server, wherein the detection values communicated are based partly on the motor health parameter and the torsional vibration; and a monitoring application on the remote server structured to receive, store and jointly analyze a subset of the detection values from the monitoring devices.

**[0879]** In embodiments, a system for data collection, processing, and torsional analysis of a rotating component in an industrial environment may comprise a data acquisition circuit structured to interpret a plurality of detection values, each of the plurality of detection values corresponding to at least one of a plurality of input sensors, wherein the plurality of input sensors comprises at least one of an angular position sensor, an angular velocity sensor and an angular acceleration sensor positioned to measure the rotating component; a streaming circuit for streaming at least a subset of the acquired detection values to a remote learning system; and a remote learning system including a torsional analysis circuit structured to analyze the detection values relative to a machine-based understanding of the state of the at least one rotating component. The machine-based understanding may be developed based on a model of the rotating component that determines a state of the at least one rotating component based at least in part on the relationship of the behavior of the rotating component to an operating frequency of a component of the industrial machine. The state of the at least one rotating component may be at least one of an operating state, a health state, a predicted lifetime state and a fault state. The machine-based understanding may be developed based by providing inputs to a deep learning machine, wherein the inputs comprise a plurality of streams of detection values for a plurality of rotating components and a plurality of measured state values for the plurality of rotating components. The state of the at least one rotating component may be at least one of an operating state, a health state, a predicted lifetime state and a fault state.

**[0880]** In embodiments, information about the health or other status or state information of or regarding a component or piece of industrial equipment may be obtained by monitoring the condition of various components throughout a process. Monitoring may include monitoring the amplitude of a sensor signal measuring attributes such as temperature, humidity, acceleration, displacement and the like. An embodiment of a data monitoring device **9700** is shown in FIG. **101** and may include a plurality of sensors **9706** communicatively coupled to a controller **9702**. The controller **9702** may include a data acquisition circuit **9704**, a signal evaluation circuit **9708**, a data storage circuit **9716** and a response circuit **9710**. The signal evaluation circuit **9708** may comprise a circuit for detecting a fault in one or more sensors, or a set of sensors, such as an overload detection circuit **9712**, a sensor fault detection circuit **9714**, or both. Additionally, the signal evaluation circuit **9708** may optionally comprise one or more of a peak detection circuit, a phase detection circuit, a bandpass filter circuit, a frequency transformation circuit, a frequency analysis circuit, a phase lock loop circuit, a torsional analysis circuit, a bearing analysis circuit, and the like.

**[0881]** The plurality of sensors **9706** may be wired to ports on the data acquisition circuit **9704**. The plurality of sensors **9706** may be wirelessly connected to the data acquisition circuit **9704**. The data acquisition circuit **9704** may be able to access detection values corresponding to the output of at least one of the plurality of sensors **9706** where the sensors **9706** may be capturing data on different operational aspects of a piece of equipment or an operating component.

**[0882]** The selection of the plurality of sensors **9706** for a data monitoring device **9700** designed for a specific component or piece of equipment may depend on a variety of considerations such as accessibility for installing new sensors, incorporation of sensors in the initial design, anticipated operational and failure conditions, resolution desired at various positions in a process or plant, reliability of the sensors, and the like. The impact of a failure, time response of a failure (e.g., warning time and/or off-nominal modes occurring before failure), likelihood of failure, and/or sensitivity required and/or difficulty to detection failure conditions may drive the extent to which a component or piece of equipment is monitored with more sensors and/or higher capability sensors being dedicated to systems where unexpected or undetected failure would be costly or have severe consequences.

**[0883]** Depending on the type of equipment, the component being measured, the environment in which the equipment is operating and the like, sensors **9706** may comprise, without limitation, one or more of the following: a vibration sensor, a thermometer, a hygrometer, a voltage sensor and/or a current sensor (for the component and/or other sensors measuring the component), an accelerometer, a velocity detector, a light or electromagnetic sensor (e.g., determining temperature, composition and/or spectral analysis, and/or object position or movement), an image sensor, a structured light sensor, a laser-based image sensor, a thermal imager, an acoustic wave sensor, a displacement sensor, a turbidity meter, a viscosity meter, a axial load sensor, a radial load sensor, a tri-axial sensor, an accelerometer, a speedometer, a tachometer, a fluid pressure meter, an air flow meter, a horsepower meter, a flow rate meter, a fluid particle detector, an optical (laser) particle counter, an ultrasonic sensor, an acoustical sensor, a heat flux sensor, a galvanic sensor, a magnetometer, a pH sensor, and the like, including, without limitation, any of the sensors described throughout this disclosure and the documents incorporated by reference.

**[0884]** The sensors **9706** may provide a stream of data over time that has a phase component, such as relating to acceleration or vibration, allowing for the evaluation of phase or frequency analysis of different operational aspects of a piece of equipment or an operating component. The sensors **9706** may provide a stream of data that is not conventionally phase-based, such as temperature, humidity, load, and the like. The sensors **9706** may provide a continuous or near continuous stream of data over time, periodic

readings, event-driven readings, and/or readings according to a selected interval or schedule.

**[0885]** In embodiments, as illustrated in FIG. **101**, the sensors **9706** may be part of the data monitoring device **9700**, referred to herein in some cases as a data collector, which in some cases may comprise a mobile or portable data collector. In embodiments, as illustrated in FIGS. **102** and **103**, one or more external sensors **9724**, which are not explicitly part of a monitoring device **9718** but rather are new, previously attached to or integrated into the equipment or component, may be opportunistically connected to or accessed by the monitoring device **9718**. The monitoring device may include a data acquisition circuit **9722**, a signal evaluation circuit **9708**, a data storage circuit **9716** and a response circuit **9710**. The signal evaluation circuit **9708** may comprise an overload detection circuit **9712**, a sensor fault detection circuit **9714**, or both. Additionally, the signal evaluation circuit **9708** may optionally comprise one or more of a peak detection circuit, a phase detection circuit, a bandpass filter circuit, a frequency transformation circuit, a frequency analysis circuit, a phase lock loop circuit, a torsional analysis circuit, a bearing analysis circuit, and the like. The data acquisition circuit **9722** may include one or more input ports **9726**.

**[0886]** The one or more external sensors **9724** may be directly connected to the one or more input ports **9726** on the data acquisition circuit **9722** of the controller **9720** or may be accessed by the data acquisition circuit **9722** wirelessly, such as by a reader, interrogator, or other wireless connection, such as over a short-distance wireless protocol. In embodiments, as shown in FIG. **103**, a data acquisition circuit **9722** may further comprise a wireless communication circuit **9730**. The data acquisition circuit **9722** may use the wireless communication circuit **9730** to access detection values corresponding to the one or more external sensors **9724** wirelessly or via a separate source or some combination of these methods.

**[0887]** In embodiments, the data storage circuit **9716** may be structured to store sensor specifications, anticipated state information and detected values. The data storage circuit **9716** may provide specifications and anticipated state information to the signal evaluation circuit **9708**.

**[0888]** In embodiments, an overload detection circuit **9712** may detect sensor overload by comparing the detected value associated with the sensor with a detected value associated with a sensor having a greater range/lower resolution monitoring the same component/attribute. Inconsistencies in measured value may indicate that the higher resolution sensor may be overloaded. In embodiments, an overload detection circuit **9712** may detect sensor overload by evaluating consistency of sensor reading with readings from other sensor data (monitoring the same or different aspects of the component/piece of equipment. In embodiments, an overload detection circuit **9712** may detect sensor overload by evaluating data collected by other sensors to identify conditions likely to result in sensor overload (e.g., heat flux sensor data indicative of the likelihood of overloading a sensor in a given location, accelerometer data indicating a likelihood of overloading a velocity sensor, and the like). In embodiments, an overload detection circuit **9712** may detect sensor overload by identifying flat line output following a rising trend. In embodiments, an overload detection circuit **9712** may detect sensor overload by transforming the sensor data to frequency data, using for example a Fast Fourier Transform (FFT), and then looking for a "ski-jump" in the frequency data which may result from the data being clipped due to an overloaded sensor. A sensor fault detection circuit **9714** may identify failure of the sensor itself, sensor health, or potential concerns regarding validity of sensor data. Rate of value change may be used to identify failure of the sensor itself. For example, a sudden jump to a maximum output may indicate a failure in the sensor rather than an overload of the sensor. In embodiments, an overload detection circuit **9712** and/or a sensor fault detection circuit **9712** may utilize sensor specifications, anticipated state information, sensor models and the like in the identification of sensor overload, failure, error, invalid data, and the like. In embodiments, the overload detection circuit **9712** or the sensor fault detection circuit **9714** may use detection values from other sensors and output from additional components such as a peak detection circuit and/or a phase detection circuit and/or a bandpass filter circuit and/or a frequency transformation circuit and/or a frequency analysis circuit and/or a phase lock loop circuit and the like to identify potential sources for the identified sensor overload, sensor faults, sensor failure, or the like. Sources or factors involved in sensor overload may include limitations on sensor range, sensor resolution, and sensor sampling frequency. Sources of apparent sensor overload may be due to a range, resolution or sampling frequency of a multiplexor supplying detection values associated with the sensor. Sources of factors involved in apparent sensor faults or failures may include environmental conditions; for example, excessive heat or cold may be associated with damage to semiconductor-based sensors, which may result in erratic sensor data, failure of a sensor to produce data, data that appears out of the range of normal behavior (e.g., large, discrete jumps in temperature for a system that does not normally experience such changes). Surges in current and/or voltage may be associated with damage to electrically connected sensors with sensitive components. Excessive vibration may result in physical damage to sensitive components of a sensor such as wires and/or connectors. An impact, which may be indicated by sudden acceleration or acoustical data may result in physical damage to a sensor with sensitive components such as wires and/or connectors. A rapid increase in humidity in the environment surrounding a sensor or an absence of oxygen may indicate water damage to a sensor. A sudden absence of signal from a sensor may be indicative of sensor disconnection which may due to vibration, impact and the like. A sensor that requires power may run out of battery power or be disconnected from a power source. In embodiments, the overload detection circuit **9712** or the sensor fault detection circuit **9714** may output a sensor status where the sensor status may be one of sensor overload, sensor failure, sensor fault, sensor healthy, and the like. The sensor fault detection circuit **9714** may determine one of a sensor fault status and a sensor validity status.

**[0889]** In embodiments, as illustrated in FIG. **104**, the data acquisition circuit **9722** may further comprise a multiplexer circuit **9731** as described elsewhere herein. Outputs from the multiplexer circuit **9731** may be utilized by the signal evaluation circuit **9708**. The response circuit **9710** may have the ability to turn on or off portions of the multiplexor circuit **9731**. The response circuit **9710** may have the ability to control the control channels of the multiplexor circuit **9731**.

**[0890]** In embodiments, the response circuit **9710** may initiate a variety of actions based on the sensor status

provided by the overload detection circuit **9712**. The response circuit **9710** may continue using the sensor if the sensor status is "sensor healthy." The response circuit **9710** may adjust a sensor scaling value (e.g., from 100 mV/gram to 10 mV/gram). The response circuit **9710** may increase an acquisition range for an alternate sensor. The response circuit **9710** may back sensor data out of previous calculations and evaluations such as bearing analysis, torsional analysis and the like. The response circuit **9710** may use projected or anticipated data (based on data acquired prior to overload/failure) in place of the actual sensor data for calculations and evaluations such as bearing analysis, torsional analysis and the like. The response circuit **9710** may issue an alarm. The response circuit **9710** may issue an alert that may comprise notification that the sensor is out of range together with information regarding the extent of the overload such as "overload range—data response may not be reliable and/or linear", "destructive range—sensor may be damaged," and the like. The response circuit **9710** may issue an alert where the alert may comprise information regarding the effect of sensor load such as "unable to monitor machine health" due to sensor overload/failure," and the like.

**[0891]** In embodiments, the response circuit **9710** may cause the data acquisition circuit **9704** to enable or disable the processing of detection values corresponding to certain sensors based on the sensor statues described above. This may include switching to sensors having different response rates, sensitivity, ranges, and the like; accessing new sensors or types of sensors, accessing data from multiple sensors, recruiting additional data collectors (such as routing the collectors to a point of work, using routing methods and systems disclosed throughout this disclosure and the documents incorporated by reference) and the like. Switching may be undertaken based on a model, a set of rules, or the like. In embodiments, switching may be under control of a machine learning system, such that switching is controlled based on one or more metrics of success, combined with input data, over a set of trials, which may occur under supervision of a human supervisor or under control of an automated system. Switching may involve switching from one input port to another (such as to switch from one sensor to another). Switching may involve altering the multiplexing of data, such as combining different streams under different circumstances. Switching may involve activating a system to obtain additional data, such as moving a mobile system (such as a robotic or drone system), to a location where different or additional data is available (such as positioning an image sensor for a different view or positioning a sonar sensor for a different direction of collection) or to a location where different sensors can be accessed (such as moving a collector to connect up to a sensor that is disposed at a location in an environment by a wired or wireless connection). This switching may be implemented by changing the control signals for a multiplexor circuit **9731** and/or by turning on or off certain input sections of the multiplexor circuit **9731**.

**[0892]** In embodiments, the response circuit **9710** may make recommendations for the replacement of certain sensors in the future with sensors having different response rates, sensitivity, ranges, and the like. The response circuit **9710** may recommend design alterations for future embodiments of the component, the piece of equipment, the operating conditions, the process, and the like.

**[0893]** In embodiments, the response circuit **9710** may recommend maintenance at an upcoming process stop or initiate a maintenance call where the maintenance may include the replacement of the sensor with the same or an alternate type of sensor having a different response rate, sensitivity, range and the like. In embodiments, the response circuit **9710** may implement or recommend process changes—for example to lower the utilization of a component that is near a maintenance interval, operating off-nominally, or failed for purpose but still at least partially operational, to change the operating speed of a component (such as to put it in a lower-demand mode), to initiate amelioration of an issue (such as to signal for additional lubrication of a roller bearing set, or to signal for an alignment process for a system that is out of balance), and the like.

**[0894]** In embodiments, the signal evaluation circuit **9708** and/or the response circuit **9710** may periodically store certain detection values in the data storage circuit **9716** to enable the tracking of component performance over time. In embodiments, based on sensor status, as described elsewhere herein recently measured sensor data and related operating conditions such as RPMs, component loads, temperatures, pressures, vibrations or other sensor data of the types described throughout this disclosure in the data storage circuit **9716** to enable the backing out of overloaded/failed sensor data. The signal evaluation circuit **9708** may store data at a higher data rate for greater granularity in future processing, the ability to reprocess at different sampling rates, and/or to enable diagnosing or post-processing of system information where operational data of interest is flagged, and the like.

**[0895]** In embodiments as shown in FIGS. **105**, **106**, **107**, and **108**, a data monitoring system **9726** may include at least one data monitoring device **9728**. At least one data monitoring device **9728** may include sensors **9706** and a controller **9730** comprising a data acquisition circuit **9704**, a signal evaluation circuit **9708**, a data storage circuit **9716**, and a communication circuit **9754** to allow data and analysis to be transmitted to a monitoring application **9736** on a remote server **9734**. The signal evaluation circuit **9708** may include at least an overload detection circuit **9712**. The signal evaluation circuit **9708** may periodically share data with the communication circuit **9732** for transmittal to the remote server **9734** to enable the tracking of component and equipment performance over time and under varying conditions by a monitoring application **9736**. Based on the sensor status, the signal evaluation circuit **9708** and/or response circuit **9710** may share data with the communication circuit **9732** for transmittal to the remote server **9734** based on the fit of data relative to one or more criteria. Data may include recent sensor data and additional data such as RPMs, component loads, temperatures, pressures, vibrations, and the like for transmittal. The signal evaluation circuit **9708** may share data at a higher data rate for transmittal to enable greater granularity in processing on the remote server.

**[0896]** In embodiments, as shown in FIG. **105**, the communication circuit **9732** may communicate data directly to a remote server **9734**. In embodiments as shown in FIG. **106**, the communication circuit **9732** may communicate data to an intermediate computer **9738** which may include a processor **9740** running an operating system **9742** and a data storage circuit **9744**.

**[0897]** In embodiments, as illustrated in FIGS. **107** and **108**, a data collection system **9746** may have a plurality of monitoring devices **9728** collecting data on multiple components in a single piece of equipment, collecting data on the same component across a plurality of pieces of equipment, (both the same and different types of equipment) in the same facility as well as collecting data from monitoring devices in multiple facilities. A monitoring application **9736** on a remote server **9734** may receive and store one or more of detection values, timing signals and data coming from a plurality of the various monitoring devices **9728**.

**[0898]** In embodiments, as shown in FIG. **107**, the communication circuit **9732** may communicated data directly to a remote server **9734**. In embodiments, as shown in FIG. **108**, the communication circuit **9732** may communicate data to an intermediate computer **9738** which may include a processor **9740** running an operating system **9742** and a data storage circuit **9744**. There may be an individual intermediate computer **9738** associated with each monitoring device **9728** or an individual intermediate computer **9738** may be associated with a plurality of monitoring devices **9728** where the intermediate computer **9738** may collect data from a plurality of data monitoring devices and send the cumulative data to the remote server **9734**. Communication to the remote server **9734** may be streaming, batch (e.g., when a connection is available) or opportunistic.

**[0899]** The monitoring application **9736** may select subsets of the detection values to be jointly analyzed. Subsets for analysis may be selected based on a single type of sensor, component or a single type of equipment in which a component is operating. Subsets for analysis may be selected or grouped based on common operating conditions such as size of load, operational condition (e.g., intermittent, continuous), operating speed or tachometer, common ambient environmental conditions such as humidity, temperature, air or fluid particulate, and the like. Subsets for analysis may be selected based on the effects of other nearby equipment such as nearby machines rotating at similar frequencies, nearby equipment producing electromagnetic fields, nearby equipment producing heat, nearby equipment inducing movement or vibration, nearby equipment emitting vapors, chemicals or particulates, or other potentially interfering or intervening effects.

**[0900]** In embodiments, the monitoring application **9736** may analyze the selected subset. In an illustrative example, data from a single sensor may be analyzed over different time periods such as one operating cycle, several operating cycles, a month, a year, the life of the component or the like. Data from multiple sensors of a common type measuring a common component type may also be analyzed over different time periods. Trends in the data such as changing rates of change associated with start-up or different points in the process may be identified. Correlation of trends and values for different sensors may be analyzed to identify those parameters whose short-term analysis might provide the best prediction regarding expected sensor performance. This information may be transmitted back to the monitoring device to update sensor models, sensor selection, sensor range, sensor scaling, sensor sampling frequency, types of data collected and analyzed locally or to influence the design of future monitoring devices.

**[0901]** In embodiments, the monitoring application **9736** may have access to equipment specifications, equipment geometry, component specifications, component materials, anticipated state information for a plurality of sensors, operational history, historical detection values, sensor life models and the like for use analyzing the selected subset using rule-based or model-based analysis. The monitoring application **9736** may provide recommendations regarding sensor selection, additional data to collect, or data to store with sensor data. The monitoring application **9736** may provide recommendations regarding scheduling repairs and/or maintenance. The monitoring application **9736** may provide recommendations regarding replacing a sensor. The replacement sensor may match the sensor being replaced or the replacement sensor may have a different range, sensitivity, sampling frequency and the like.

**[0902]** In embodiments, the monitoring application **9736** may include a remote learning circuit structured to analyze sensor status data (e.g., sensor overload, sensor faults, sensor failure) together with data from other sensors, failure data on components being monitored, equipment being monitored, product being produced, and the like. The remote learning system may identify correlations between sensor overload and data from other sensors.

**[0903]** Clause 1: In embodiments, a monitoring system for data collection in an industrial environment, the monitoring system comprising: a data acquisition circuit structured to interpret a plurality of detection values, each of the plurality of detection values corresponding to at least one of a plurality of input sensors; a data storage circuit structured to store sensor specifications, anticipated state information and detected values; a signal evaluation circuit comprising: an overload identification circuit structured to determine a sensor overload status of at least one sensor in response to the plurality of detection values and at least one of anticipated state information and sensor specification; a sensor fault detection circuit structured to determine one of a sensor fault status and a sensor validity status of at least one sensor in response to the plurality of detection values and at least one of anticipated state information and sensor specification; and a response circuit structured to perform at least one operation in response to one of a sensor overload status, a sensor health status, and a sensor validity status. A monitoring system of clause 1, the system further comprising a mobile data collector for collecting data from the plurality of input sensors. 3. The monitoring system of clause 1, wherein the at least one operation comprises issuing an alert or an alarm. 4. The monitoring system of clause 1, wherein the at least one operation further comprises storing additional data in the data storage circuit. 5. The monitoring system of clause 1, the system further comprising a multiplexor (MUX) circuit. 6. The monitoring system of clause 5, wherein the at least one operation comprises at least one of enabling or disabling one or more portions of the multiplexer circuit and altering the multiplexer control lines. 7. The monitoring system of clause 5, the system further comprising at least two multiplexer (MUX) circuits and the at least one operation comprises changing connections between the at least two multiplexer circuits. 8. The monitoring system of clause 7, the system further comprising a MUX control circuit structured to interpret a subset of the plurality of detection values and provide the logical control of the MUX and the correspondence of MUX input and detected values as a result, wherein the logic control of the MUX comprises adaptive scheduling of the multiplexer control lines. 9. A system for data collection, processing, and component analysis in an industrial environment compris-

ing: a plurality of monitoring devices, each monitoring device comprising: a data acquisition circuit structured to interpret a plurality of detection values, each of the plurality of detection values corresponding to at least one of a plurality of input sensors; a data storage for storing specifications and anticipated state information for a plurality of sensor types and buffering the plurality of detection values for a predetermined length of time; a signal evaluation circuit comprising: an overload identification circuit structured to determine a sensor overload status of at least one sensor in response to the plurality of detection values and at least one of anticipated state information and sensor specification; a sensor fault detection circuit structured to determine one of a sensor fault status and a sensor validity status of at least one sensor in response to the plurality of detection values and at least one of anticipated state information and sensor specification; and a response circuit structured to perform at least one operation in response to one of a sensor overload status, a sensor health status, and a sensor validity status; a communication circuit structured to communicate with a remote server providing one of the sensor overload status, the sensor health status, and the sensor validity status and a portion of the buffered detection values to the remote server; and a monitoring application on the remote server structured to: receive the at least one selected detection value and one of the sensor overload status, the sensor health status, and the sensor validity status; jointly analyze a subset of the detection values received from the plurality of monitoring devices; and recommend an action. 10. The system of clause 9, with at least one of the monitoring devices further comprising a mobile data collector for collecting data from the plurality of input sensors. 11. The system of clause 9, wherein the at least one operation comprises issuing an alert or an alarm. 12. The monitoring system of clause 9, wherein the at least one operation further comprises storing additional data in the data storage circuit. 13. The system of clause 9, with at least one of the monitoring devices further comprising further comprising a multiplexor (MUX) circuit. 14. The system of clause 13, wherein the at least one operation comprises at least one of enabling or disabling one or more portions of the multiplexer circuit and altering the multiplexer control lines. 15. The system of clause 9, at least one of the monitoring devices further comprising at least two multiplexer (MUX) circuits and the at least one operation comprises changing connections between the at least two multiplexer circuits. 16. The monitoring system of clause 15, the system further comprising a MUX control circuit structured to interpret a subset of the plurality of detection values and provide the logical control of the MUX and the correspondence of MUX input and detected values as a result, wherein the logic control of the MUX comprises adaptive scheduling of the multiplexer control lines. 17. The system of clause 9, wherein the monitoring application comprises a remote learning circuit structured to analyze sensor status data together sensor data and identify correlations between sensor overload and data from other systems. 18. The system of clause 9, the monitoring application structured to subset detection values based on one of the sensor overload status, the sensor health status, the sensor validity status, the anticipated life of a sensor associated with detection values, the anticipated type of the equipment associated with detection values, and operational conditions under which detection values were measured. 19. The system of clause 9, wherein the supplemental information comprises one of sensor specification, sensor historic performance, maintenance records, repair records and an anticipated state model. 20. The system of clause 19, wherein the analysis of the subset of detection values comprises feeding a neural net with the subset of detection values and supplemental information to learn to recognize various sensor operating states, health states, life expectancies and fault states utilizing deep learning techniques.

**[0904]** Referring to FIGS. **109** through **136**, embodiments of the present disclosure, including those involving expert systems, self-organization, machine learning, artificial intelligence, and the like, may benefit from the use of a neural net, such as a neural net trained for pattern recognition, for classification of one or more parameters, characteristics, or phenomena, for support of autonomous control, and other purposes. References to a neural net throughout this disclosure should be understood to encompass a wide range of different types of neural networks, machine learning systems, artificial intelligence systems, and the like, such as feed forward neural networks, radial basis function neural networks, self-organizing neural networks (e.g., Kohonen self-organizing neural networks), recurrent neural networks, modular neural networks, artificial neural networks, physical neural networks, multi-layered neural networks, convolutional neural networks, hybrids of neural networks with other expert systems (e.g., hybrid fuzzy logic—neural network systems), autoencoder neural networks, probabilistic neural networks, time delay neural networks, convolutional neural networks, regulatory feedback neural networks, radial basis function neural networks, recurrent neural networks, Hopfield neural networks, Boltzmann machine neural networks, self-organizing map (SOM) neural networks, learning vector quantization (LVQ) neural networks, fully recurrent neural networks, simple recurrent neural networks, echo state neural networks, long short-term memory neural networks, bi-directional neural networks, hierarchical neural networks, stochastic neural networks, genetic scale RNN neural networks, committee of machines neural networks, associative neural networks, physical neural networks, instantaneously trained neural networks, spiking neural networks, neocognition neural networks, dynamic neural networks, cascading neural networks, neuro-fuzzy neural networks, compositional pattern-producing neural networks, memory neural networks, hierarchical temporal memory neural networks, deep feed forward neural networks, gated recurrent unit (GCU) neural networks, auto encoder neural networks, variational auto encoder neural networks, denoising auto encoder neural networks, sparse auto-encoder neural networks, Markov chain neural networks, restricted Boltzmann machine neural networks, deep belief neural networks, deep convolutional neural networks, deconvolutional neural networks, deep convolutional inverse graphics neural networks, generative adversarial neural networks, liquid state machine neural networks, extreme learning machine neural networks, echo state neural networks, deep residual neural networks, support vector machine neural networks, neural Turing machine neural networks, and/or holographic associative memory neural networks, or hybrids or combinations of the foregoing, or combinations with other expert systems, such as rule-based systems, model-based systems (including ones based on physical models, statistical models, flow-based models, biological models, biomimetic models, and the like).

**[0905]** In embodiments, the foregoing neural network may be configured to connect with a DAQ instrument and other data collectors that may receive analog signals from one or more sensors. The foregoing neural networks may also be configured to interface with, connect to, or integrate with expert systems that can be local and/or available through one or more cloud networks. In embodiments, FIGS. **110** through **136** depict exemplary neural networks and FIG. **109** depicts a legend showing the various components of the neural networks depicted throughout FIGS. **110** to **136**. FIG. **109** depicts the various neural net components **10000**, as depicted in cells **10002** for which there are assigned functions and requirements. In embodiments, the various neural net examples may include back fed data/sensor cells **10010**, data/sensor cells **10012**, noisy input cells, **10014**, and hidden cells, **10018**. The neural net components **10000** also include the other following cells **10002**: probabilistic hidden cells **10020**, spiking hidden cells **10022**, output cells **10024**, match input/output cell **10028**, recurrent cell **10030**, memory cell, **10032**, different memory cell **10034**, kernals **10038** and convolution or pool cells **10040**.

**[0906]** In FIG. **110**, a streaming data collection system **10050** may include a DAQ instrument **10052** or other data collectors that may gather analog signals from sensors including sensor **10060**, sensor **10062** and sensor **10064**. The streaming data collection system **10050** may include a perceptron neural network **10070** that may connect to, integrate with, or interface with an expert system **10080**. In FIG. **111**, a streaming data collection system **10090** may include the DAQ instrument **10052** or other data collectors that may gather analog signals from sensors including the sensors **10060**, **10062**, **10064**. The streaming data collection system **10090** may include a feed forward neural network **10092** that may connect to, integrate with, or interface with the expert system **10080**. In FIG. **112**, a streaming data collection system **10100** may include the DAQ instrument **10052** or other data collectors that may gather analog signals from sensors including the sensors **10060**, **10062**, **10064**. The streaming data collection system **10100** may include a radial basis neural network **10102** that may connect to, integrate with, or interface with the expert system **10080**. In FIG. **113**, a streaming data collection system **10110** may include the DAQ instrument **10052** or other data collectors that may gather analog signals from sensors including the sensors **10060**, **10062**, **10064**. The streaming data collection system **10110** may include a deep feed forward neural network **10112** that may connect to, integrate with, or interface with the expert system **10080**. In FIG. **114**, a streaming data collection system **10120** may include the DAQ instrument **10052** or other data collectors that may gather analog signals from sensors including the sensors **10060**, **10062**, **10064**. The streaming data collection system **10120** may include a recurrent neural network **10122** that may connect to, integrate with, or interface with the expert system **10080**.

**[0907]** In FIG. **115**, a streaming data collection system **10130** may include the DAQ instrument **10052** or other data collectors that may gather analog signals from sensors including the sensors **10060**, **10062**, **10064**. The streaming data collection system **10130** may include a long/short term neural network **10132** that may connect to, integrate with, or interface with the expert system **10080**. In FIG. **116**, a streaming data collection system **10140** may include the DAQ instrument **10052** or other data collectors that may gather analog signals from sensors including the sensors **10060**, **10062**, **10064**. The streaming data collection system **10140** may include a gated recurrent neural network **10142** that may connect to, integrate with, or interface with the expert system **10080**. In FIG. **117**, a streaming data collection system **10150** may include the DAQ instrument **10052** or other data collectors that may gather analog signals from sensors including the sensors **10060**, **10062**, **10064**. The streaming data collection system **10150** may include an auto encoder neural network **10152** that may connect to, integrate with, or interface with the expert system **10080**. In FIG. **118**, a streaming data collection system **10160** may include the DAQ instrument **10052** or other data collectors that may gather analog signals from sensors including the sensors **10060**, **10062**, **10064**. The streaming data collection system **10160** may include a variational neural network **10162** that may connect to, integrate with, or interface with the expert system **10080**. In FIG. **119**, a streaming data collection system **10170** may include the DAQ instrument **10052** or other data collectors that may gather analog signals from sensors including the sensors **10060**, **10062**, **10064**. The streaming data collection system **10170** may include a denoising neural network **10172** that may connect to, integrate with, or interface with the expert system **10080**. In FIG. **120**, a streaming data collection system **10180** may include the DAQ instrument **10052** or other data collectors that may gather analog signals from sensors including the sensors **10060**, **10062**, **10064**. The streaming data collection system **10180** may include a sparse neural network **10182** that may connect to, integrate with, or interface with the expert system **10080**. In FIG. **121**, a streaming data collection system **10190** may include the DAQ instrument **10052** or other data collectors that may gather analog signals from sensors including the sensors **10060**, **10062**, **10064**. The streaming data collection system **10190** may include a Markov chain neural network **10182** that may connect to, integrate with, or interface with the expert system **10080**.

**[0908]** In FIG. **122**, a streaming data collection system **10200** may include the DAQ instrument **10052** or other data collectors that may gather analog signals from sensors including the sensors **10060**, **10062**, **10064**. The streaming data collection system **10200** may include a Hopfield network neural network **10202** that may connect to, integrate with, or interface with the expert system **10080**. In FIG. **123**, a streaming data collection system **10210** may include the DAQ instrument **10052** or other data collectors that may gather analog signals from sensors including the sensors **10060**, **10062**, **10064**. The streaming data collection system **10210** may include a Boltzmann machine neural network **10212** that may connect to, integrate with, or interface with the expert system **10080**. In FIG. **124**, a streaming data collection system **10220** may include the DAQ instrument **10052** or other data collectors that may gather analog signals from sensors including the sensors **10060**, **10062**, **10064**. The streaming data collection system **10220** may include a restricted BM neural network **10222** that may connect to, integrate with, or interface with the expert system **10080**. In FIG. **125**, a streaming data collection system **10230** may include the DAQ instrument **10052** or other data collectors that may gather analog signals from sensors including the sensors **10060**, **10062**, **10064**. The streaming data collection system **10230** may include a deep belief neural network **10232** that may connect to, integrate with, or interface with the expert system **10080**. In FIG. **126**, a streaming data

collection system **10240** may include the DAQ instrument **10052** or other data collectors that may gather analog signals from sensors including the sensors **10060**, **10062**, **10064**. The streaming data collection system **10240** may include a deep convolutional neural network **10242** that may connect to, integrate with, or interface with the expert system **10080**. In FIG. **127**, a streaming data collection system **10250** may include the DAQ instrument **10052** or other data collectors that may gather analog signals from sensors including the sensors **10060**, **10062**, **10064**. The streaming data collection system **10250** may include a deconvolutional neural network **10242** that may connect to, integrate with, or interface with the expert system **10080**. In FIG. **128**, a streaming data collection system **10260** may include the DAQ instrument **10052** or other data collectors that may gather analog signals from sensors including the sensors **10060**, **10062**, **10064**. The streaming data collection system **10260** may include a deep convolutional inverse graphics neural network **10262** that may connect to, integrate with, or interface with the expert system **10080**. In FIG. **129**, a streaming data collection system **10270** may include the DAQ instrument **10052** or other data collectors that may gather analog signals from sensors including the sensors **10060**, **10062**, **10064**. The streaming data collection system **10270** may include a generative adversarial neural network **10272** that may connect to, integrate with, or interface with the expert system **10080**. In FIG. **130**, a streaming data collection system **10280** may include the DAQ instrument **10052** or other data collectors that may gather analog signals from sensors including the sensors **10060**, **10062**, **10064**. The streaming data collection system **10280** may include a liquid state machine neural network **10282** that may connect to, integrate with, or interface with the expert system **10080**. In FIG. **131**, a streaming data collection system **10290** may include the DAQ instrument **10052** or other data collectors that may gather analog signals from sensors including the sensors **10060**, **10062**, **10064**. The streaming data collection system **10290** may include an extreme learning machine neural network **10292** that may connect to, integrate with, or interface with the expert system **10080**. In FIG. **132**, a streaming data collection system **10300** may include the DAQ instrument **10052** or other data collectors that may gather analog signals from sensors including the sensors **10060**, **10062**, **10064**. The streaming data collection system **10300** may include an echo state neural network **10302** that may connect to, integrate with, or interface with the expert system **10080**. In FIG. **133**, a streaming data collection system **10310** may include the DAQ instrument **10052** or other data collectors that may gather analog signals from sensors including the sensors **10060**, **10062**, **10064**. The streaming data collection system **10310** may include a deep residual neural network **10312** that may connect to, integrate with, or interface with the expert system **10080**. In FIG. **134**, a streaming data collection system **10320** may include the DAQ instrument **10052** or other data collectors that may gather analog signals from sensors including the sensors **10060**, **10062**, **10064**. The streaming data collection system **10320** may include a Kohonen neural network **10322** that may connect to, integrate with, or interface with the expert system **10080**. In FIG. **135**, a streaming data collection system **10330** may include the DAQ instrument **10052** or other data collectors that may gather analog signals from sensors including the sensors **10060**, **10062**, **10064**. The streaming data collection system **10330** may include a support vector machine neural network **10332** that may connect to, integrate with, or interface with the expert system **10080**. In FIG. **136**, a streaming data collection system **10340** may include the DAQ instrument **10052** or other data collectors that may gather analog signals from sensors including the sensors **10060**, **10062**, **10064**. The streaming data collection system **10340** may include a neural Turing machine neural network **10342** that may connect to, integrate with, or interface with the expert system **10080**.

**[0909]** The foregoing neural networks may have a variety of nodes or neurons, which may perform a variety of functions on inputs, such as inputs received from sensors or other data sources, including other nodes. Functions may involve weights, features, feature vectors, and the like. Neurons may include perceptron, neurons that mimic biological functions (such as of the human senses of touch, vision, taste, hearing, and smell), and the like. Continuous neurons, such as with sigmoidal activation, may be used in the context of various forms of neural net, such as where back propagation is involved.

**[0910]** In many embodiments, an expert system or neural network may be trained, such as by a human operator or supervisor, or based on a data set, model, or the like. Training may include presenting the neural network with one or more training data sets that represent values, such as sensor data, event data, parameter data, and other types of data (including the many types described throughout this disclosure), as well as one or more indicators of an outcome, such as an outcome of a process, an outcome of a calculation, an outcome of an event, an outcome of an activity, or the like. Training may include training in optimization, such as training a neural network to optimize one or more systems based on one or more optimization approaches, such as Bayesian approaches, parametric Bayes classifier approaches, k-nearest-neighbor classifier approaches, iterative approaches, interpolation approaches, Pareto optimization approaches, algorithmic approaches, and the like. Feedback may be provided in a process of variation and selection, such as with a genetic algorithm that evolves one or more solutions based on feedback through a series of rounds.

**[0911]** In embodiments, a plurality of neural networks may be deployed in a cloud platform that receives data streams and other inputs collected (such as by mobile data collectors) in one or more industrial environments and transmitted to the cloud platform over one or more networks, including using network coding to provide efficient transmission. In the cloud platform, optionally using massively parallel computational capability, a plurality of different neural networks of several types (including modular forms, structure-adaptive forms, hybrids, and the like) may be used to undertake prediction, classification, control functions, and provide other outputs as described in connection with expert systems disclosed throughout this disclosure. The different neural networks may be structured to compete with each other (optionally including the use of evolutionary algorithms, genetic algorithms, or the like), such that an appropriate type of neural network, with appropriate input sets, weights, node types and functions, and the like, may be selected, such as by an expert system, for a specific task involved in a given context, workflow, environment process, system, or the like.

**[0912]** In embodiments, methods and systems described herein that involve an expert system or self-organization

capability may use a feed forward neural network, which moves information in one direction, such as from a data input, like an analog sensor located on or proximal to an industrial machine, through a series of neurons or nodes, to an output. Data may move from the input nodes to the output nodes, optionally passing through one or more hidden nodes, without loops. In embodiments, feedforward neural networks may be constructed with various types of units, such as binary McCulloch-Pitts neurons, the simplest of which is a perceptron.

**[0913]** In embodiments, methods and systems described herein that involve an expert system or self-organization capability may use a radial basis function (RBF) neural network, which may be preferred in some situations involving interpolation in a multi-dimensional space (such as where interpolation is helpful in optimizing a multi-dimensional function, such as for optimizing a data marketplace as described here, optimizing the efficiency or output of a power generation system, a factory system, or the like, or other situation involving multiple dimensions). In embodiments, each neuron in the RBF neural network stores an example from a training set as a "prototype." Linearity involved in the functioning of this neural network offers RBF the advantage of not typically suffering from problems with local minima or maxima.

**[0914]** In embodiments, methods and systems described herein that involve an expert system or self-organization capability may use a radial basis function (RBF) neural network, such as one that employs a distance criterion with respect to a center (e.g., a Gaussian function). A radial basis function may be applied as a replacement for a hidden layer (such as a sigmoidal hidden layer transfer) in a multi-layer perceptron. An RBF network may have two layers, such as the case where an input is mapped onto each RBF in a hidden layer. In embodiments, an output layer may comprise a linear combination of hidden layer values representing, for example, a mean predicted output. The output layer value may provide an output that is the same as or similar to that of a regression model in statistics. In classification problems, the output layer may be a sigmoid function of a linear combination of hidden layer values, representing a posterior probability. Performance in both cases is often improved by shrinkage techniques, such as ridge regression in classical statistics. This corresponds to a prior belief in small parameter values (and therefore smooth output functions) in a Bayesian framework. RBF networks may avoid local minima, because the only parameters that are adjusted in the learning process are the linear mapping from hidden layer to output layer. Linearity ensures that the error surface is quadratic and therefore has a single minimum. In regression problems, this can be found in one matrix operation. In classification problems, the fixed non-linearity introduced by the sigmoid output function may be handled using an iteratively re-weighted least squares function or the like.

**[0915]** RBF networks may use kernel methods such as support vector machines (SVM) and Gaussian processes (where the RBF is the kernel function). A non-linear kernel function may be used to project the input data into a space where the learning problem can be solved using a linear model.

**[0916]** In embodiments, an RBF neural network may include an input layer, a hidden layer, and a summation layer. In the input layer, one neuron appears in the input layer for each predictor variable. In the case of categorical variables, N−1 neurons are used, where N is the number of categories. The input neurons may, in embodiments, standardize the value ranges by subtracting the median and dividing by the interquartile range. The input neurons may then feed the values to each of the neurons in the hidden layer. In the hidden layer, a variable number of neurons may be used (determined by the training process). Each neuron may consist of a radial basis function that is centered on a point with as many dimensions as a number of predictor variables. The spread (e.g., radius) of the RBF function may be different for each dimension. The centers and spreads may be determined by training. When presented with a vector of input values from the input layer, a hidden neuron may compute a Euclidean distance of the test case from the neuron's center point and then apply the RBF kernel function to this distance, such as using the spread values. The resulting value may then be passed to the summation layer. In the summation layer, the value coming out of a neuron in the hidden layer may be multiplied by a weight associated with the neuron and may add to the weighted values of other neurons. This sum becomes the output. For classification problems, one output is produced (with a separate set of weights and summation units) for each target category. The value output for a category is the probability that the case being evaluated has that category. In training of an RBF, various parameters may be determined, such as the number of neurons in a hidden layer, the coordinates of the center of each hidden-layer function, the spread of each function in each dimension, and the weights applied to outputs as they pass to the summation layer. Training may be used by clustering algorithms (such as k-means clustering), by evolutionary approaches, and the like.

**[0917]** In embodiments, a recurrent neural network may have a time-varying, real-valued (more than just zero or one) activation (output). Each connection may have a modifiable real-valued weight. Some of the nodes are called labeled nodes, some output nodes, and others hidden nodes. For supervised learning in discrete time settings, training sequences of real-valued input vectors may become sequences of activations of the input nodes, one input vector at a time. At each time step, each non-input unit may compute its current activation as a nonlinear function of the weighted sum of the activations of all units from which it receives connections. The system can explicitly activate (independent of incoming signals) some output units at certain time steps.

**[0918]** In embodiments, methods and systems described herein that involve an expert system or self-organization capability may use a self-organizing neural network, such as a Kohonen self-organizing neural network, such as for visualization of views of data, such as low-dimensional views of high-dimensional data. The self-organizing neural network may apply competitive learning to a set of input data, such as from one or more sensors or other data inputs from or associated with an industrial machine. In embodiments, the self-organizing neural network may be used to identify structures in data, such as unlabeled data, such as in data sensed from a range of vibration, acoustic, or other analog sensors in an industrial environment, where sources of the data are unknown (such as where vibrations may be coming from any of a range of unknown sources). The self-organizing neural network may organize structures or patterns in the data, such that they can be recognized, analyzed, and labeled, such as identifying structures as

corresponding to vibrations induced by the movement of a floor, or acoustic signals created by high frequency rotation of a shaft of a somewhat distant machine.

**[0919]** In embodiments, methods and systems described herein that involve an expert system or self-organization capability may use a recurrent neural network, which may allow for a bi-directional flow of data, such as where connected units (e.g., neurons or nodes) form a directed cycle. Such a network may be used to model or exhibit dynamic temporal behavior, such as those involved in dynamic systems including a wide variety of the industrial machines and devices described throughout this disclosure, such as a power generation machine operating at variable speeds or frequencies in variable conditions with variable inputs, a robotic manufacturing system, a refining system, or the like, where dynamic system behavior involves complex interactions that an operator may desire to understand, predict, control and/or optimize. For example, the recurrent neural network may be used to anticipate the state (such as a maintenance state, a fault state, an operational state, or the like), of an industrial machine, such as one performing a dynamic process or action. In embodiments, the recurrent neural network may use internal memory to process a sequence of inputs, such as from other nodes and/or from sensors and other data inputs from the industrial environment, of the various types described herein. In embodiments, the recurrent neural network may also be used for pattern recognition, such as for recognizing an industrial machine based on a sound signature, a heat signature, a set of feature vectors in an image, a chemical signature, or the like. In a non-limiting example, a recurrent neural network may recognize a shift in an operational mode of a turbine, a generator, a motor, a compressor, or the like (such as a gear shift) by learning to classify the shift from a training data set consisting of a stream of data from tri-axial vibration sensors and/or acoustic sensors applied to one or more of such machines.

**[0920]** In embodiments, methods and systems described herein that involve an expert system or self-organization capability may use a modular neural network, which may comprise a series of independent neural networks (such as ones of various types described herein) that are moderated by an intermediary. Each of the independent neural networks in the modular neural network may work with separate inputs, accomplishing subtasks that make up the task the modular network as whole is intended to perform. For example, a modular neural network may comprise a recurrent neural network for pattern recognition, such as to recognize what type of industrial machine is being sensed by one or more sensors that are provided as input channels to the modular network and an RBF neural network for optimizing the behavior of the machine once understood. The intermediary may accept inputs of each of the individual neural networks, process them, and create output for the modular neural network, such an appropriate control parameter, a prediction of state, or the like.

**[0921]** Combinations among any of the pairs, triplets, or larger combinations, of the various neural network types described herein, are encompassed by the present disclosure. This may include combinations where an expert system uses one neural network for recognizing a pattern (e.g., a pattern indicating a problem or fault condition) and a different neural network for self-organizing an activity or work flow based on the recognized pattern (such as providing an output governing autonomous control of a system in response to the recognized condition or pattern). This may also include combinations where an expert system uses one neural network for classifying an item (e.g., identifying a machine, a component, or an operational mode) and a different neural network for predicting a state of the item (e.g., a fault state, an operational state, an anticipated state, a maintenance state, or the like). Modular neural networks may also include situations where an expert system uses one neural network for determining a state or context (such as a state of a machine, a process, a work flow, a marketplace, a storage system, a network, a data collector, or the like) and a different neural network for self-organizing a process involving the state or context (e.g., a data storage process, a network coding process, a network selection process, a data marketplace process, a power generation process, a manufacturing process, a refining process, a digging process, a boring process, or other process described herein).

**[0922]** In embodiments, methods and systems described herein that involve an expert system or self-organization capability may use a physical neural network where one or more hardware elements is used to perform or simulate neural behavior. In embodiments, one or more hardware neurons may be configured to stream voltage values that represent analog vibration sensor data voltage values, to calculate velocity information from analog sensor inputs representing acoustic, vibration or other data, to calculation acceleration information from sensor inputs representing acoustic, vibration, or other data, or the like. One or more hardware nodes may be configured to stream output data resulting from the activity of the neural net. Hardware nodes, which may comprise one or more chips, microprocessors, integrated circuits, programmable logic controllers, application-specific integrated circuits, field-programmable gate arrays, or the like, may be provided to optimize the speed, input/output efficiency, energy efficiency, signal to noise ratio, or other parameter of some part of a neural net of any of the types described herein. Hardware nodes may include hardware for acceleration of calculations (such as dedicated processors for performing basic or more sophisticated calculations on input data to provide outputs, dedicated processors for filtering or compressing data, dedicated processors for decompressing data, dedicated processors for compression of specific file or data types (e.g., for handling image data, video streams, acoustic signals, vibration data, thermal images, heat maps, or the like), and the like. A physical neural network may be embodied in a data collector, such as a mobile data collector described herein, including one that may be reconfigured by switching or routing inputs in varying configurations, such as to provide different neural net configurations within the data collector for handling different types of inputs (with the switching and configuration optionally under control of an expert system, which may include a software-based neural net located on the data collector or remotely). A physical, or at least partially physical, neural network may include physical hardware nodes located in a storage system, such as for storing data within an industrial machine or in an industrial environment, such as for accelerating input/output functions to one or more storage elements that supply data to or take data from the neural net. A physical, or at least partially physical, neural network may include physical hardware nodes located in a network, such as for transmitting data within, to or from an industrial environment, such as for

accelerating input/output functions to one or more network nodes in the net, accelerating relay functions, or the like. In embodiments of a physical neural network, an electrically adjustable resistance material may be used for emulating the function of a neural synapse. In embodiments, the physical hardware emulates the neurons, and software emulates the neural network between the neurons. In embodiments, neural networks complement conventional algorithmic computers. They are versatile and can be trained to perform appropriate functions without the need for any instructions, such as classification functions, optimization functions, pattern recognition functions, control functions, selection functions, evolution functions, and others.

**[0923]** In embodiments, methods and systems described herein that involve an expert system or self-organization capability may use a multilayered feed forward neural network, such as for complex pattern classification of one or more items, phenomena, modes, states, or the like. In embodiments, a multilayered feedforward neural network may be trained by an optimization technical, such as a genetic algorithm, such as to explore a large and complex space of options to find an optimum, or near-optimum, global solution. For example, one or more genetic algorithms may be used to train a multilayered feedforward neural network to classify complex phenomena, such as to recognize complex operational modes of industrial machines, such as modes involving complex interactions among machines (including interference effects, resonance effects, and the like), modes involving non-linear phenomena, such as impacts of variable speed shafts, which may make analysis of vibration and other signals difficult, modes involving critical faults, such as where multiple, simultaneous faults occur, making root cause analysis difficult, and others. In embodiments, a multilayered feed forward neural network may be used to classify results from ultrasonic monitoring or acoustic monitoring of an industrial machine, such as monitoring an interior set of components within a housing, such as motor components, pumps, valves, fluid handling components, and many others, such as in refrigeration systems, refining systems, reactor systems, catalytic systems, and others.

**[0924]** In embodiments, methods and systems described herein that involve an expert system or self-organization capability may use a feedforward, back-propagation multilayer perceptron (MLP) neural network, such as for handling one or more remote sensing applications, such as for taking inputs from sensors distributed throughout various industrial environments. In embodiments, the MLP neural network may be used for classification of physical environments, such as mining environments, exploration environments, drilling environments, and the like, including classification of geological structures (including underground features and above ground features), classification of materials (including fluids, minerals, metals, and the like), and other problems. This may include fuzzy classification.

**[0925]** In embodiments, methods and systems described herein that involve an expert system or self-organization capability may use a structure-adaptive neural network, where the structure of a neural network is adapted, such as based on a rule, a sensed condition, a contextual parameter, or the like. For example, if a neural network does not converge on a solution, such as classifying an item or arriving at a prediction, when acting on a set of inputs after some amount of training, the neural network may be modified, such as from a feedforward neural network to a recurrent neural network, such as by switching data paths between some subset of nodes from unidirectional to bi-directional data paths. The structure adaptation may occur under control of an expert system, such as to trigger adaptation upon occurrence of a trigger, rule or event, such as recognizing occurrence of a threshold (such as an absence of a convergence to a solution within a given amount of time) or recognizing a phenomenon as requiring different or additional structure (such as recognizing that a system is varying dynamically or in a non-linear fashion). In one non-limiting example, an expert system may switch from a simple neural network structure like a feedforward neural network to a more complex neural network structure like a recurrent neural network, a convolutional neural network, or the like upon receiving an indication that a continuously variable transmission is being used to drive a generator, turbine, or the like in a system being analyzed.

**[0926]** In embodiments, methods and systems described herein that involve an expert system or self-organization capability may use an autoencoder, autoassociator or Diabolo neural network, which may be similar to a multilayer perceptron ("MLP") neural network, such as where there may be an input layer, an output layer and one or more hidden layers connecting them. However, the output layer in the auto-encoder may have the same number of units as the input layer, where the purpose of the MLP neural network is to reconstruct its own inputs (rather than just emitting a target value). Therefore, the auto encoders may operate as an unsupervised learning model. An auto encoder may be used, for example, for unsupervised learning of efficient codings, such as for dimensionality reduction, for learning generative models of data, and the like. In embodiments, an auto-encoding neural network may be used to self-learn an efficient network coding for transmission of analog sensor data from an industrial machine over one or more networks. In embodiments, an auto-encoding neural network may be used to self-learn an efficient storage approach for storage of streams of analog sensor data from an industrial environment.

**[0927]** In embodiments, methods and systems described herein that involve an expert system or self-organization capability may use a probabilistic neural network ("PNN"), which in embodiments may comprise a multi-layer (e.g., four-layer) feedforward neural network, where layers may include input layers, hidden layers, pattern/summation layers and an output layer. In an embodiment of a PNN algorithm, a parent probability distribution function (PDF) of each class may be approximated, such as by a Parzen window and/or a non-parametric function. Then, using the PDF of each class, the class probability of a new input is estimated, and Bayes' rule may be employed, such as to allocate it to the class with the highest posterior probability. A PNN may embody a Bayesian network and may use a statistical algorithm or analytic technique, such as Kernel Fisher discriminant analysis technique. The PNN may be used for classification and pattern recognition in any of a wide range of embodiments disclosed herein. In one non-limiting example, a probabilistic neural network may be used to predict a fault condition of an engine based on collection of data inputs from sensors and instruments for the engine.

**[0928]** In embodiments, methods and systems described herein that involve an expert system or self-organization

capability may use a time delay neural network (TDNN), which may comprise a feedforward architecture for sequential data that recognizes features independent of sequence position. In embodiments, to account for time shifts in data, delays are added to one or more inputs, or between one or more nodes, so that multiple data points (from distinct points in time) are analyzed together. A time delay neural network may form part of a larger pattern recognition system, such as using a perceptron network. In embodiments, a TDNN may be trained with supervised learning, such as where connection weights are trained with back propagation or under feedback. In embodiments, a TDNN may be used to process sensor data from distinct streams, such as a stream of velocity data, a stream of acceleration data, a stream of temperature data, a stream of pressure data, and the like, where time delays are used to align the data streams in time, such as to help understand patterns that involve understanding of the various streams (e.g., where increases in pressure and acceleration occur as an industrial machine overheats).

**[0929]** In embodiments, methods and systems described herein that involve an expert system or self-organization capability may use a convolutional neural network (referred to in some cases as a CNN, a ConvNet, a shift invariant neural network, or a space invariant neural network), wherein the units are connected in a pattern similar to the visual cortex of the human brain. Neurons may respond to stimuli in a restricted region of space, referred to as a receptive field. Receptive fields may partially overlap, such that they collectively cover the entire (e.g., visual) field. Node responses can be calculated mathematically, such as by a convolution operation, such as using multilayer perceptrons that use minimal preprocessing. A convolutional neural network may be used for recognition within images and video streams, such as for recognizing a type of machine in a large environment using a camera system disposed on a mobile data collector, such as on a drone or mobile robot. In embodiments, a convolutional neural network may be used to provide a recommendation based on data inputs, including sensor inputs and other contextual information, such as recommending a route for a mobile data collector. In embodiments, a convolutional neural network may be used for processing inputs, such as for natural language processing of instructions provided by one or more parties involved in a workflow in an environment. In embodiments, a convolutional neural network may be deployed with a large number of neurons (e.g., 100,000, 500,000 or more), with multiple (e.g., 4, 5, 6 or more) layers, and with many (e.g., millions) parameters. A convolutional neural net may use one or more convolutional nets.

**[0930]** In embodiments, methods and systems described herein that involve an expert system or self-organization capability may use a regulatory feedback network, such as for recognizing emergent phenomena (such as new types of faults not previously understood in an industrial environment).

**[0931]** In embodiments, methods and systems described herein that involve an expert system or self-organization capability may use a self-organizing map ("SOM"), involving unsupervised learning. A set of neurons may learn to map points in an input space to coordinates in an output space. The input space can have different dimensions and topology from the output space, and the SOM may preserve these while mapping phenomena into groups.

**[0932]** In embodiments, methods and systems described herein that involve an expert system or self-organization capability may use a learning vector quantization neural net ("LVQ"). Prototypical representatives of the classes may parameterize, together with an appropriate distance measure, in a distance-based classification scheme.

**[0933]** In embodiments, methods and systems described herein that involve an expert system or self-organization capability may use an echo state network ("ESN"), which may comprise a recurrent neural network with a sparsely connected, random hidden layer. The weights of output neurons may be changed (e.g., the weights may be trained based on feedback). In embodiments, an ESN may be used to handle time series patterns, such as, in an example, recognizing a pattern of events associated with a gear shift in an industrial turbine, generator, or the like.

**[0934]** In embodiments, methods and systems described herein that involve an expert system or self-organization capability may use a bi-directional, recurrent neural network ("BRNN"), such as using a finite sequence of values (e.g., voltage values from a sensor) to predict or label each element of the sequence based on both the past and the future context of the element. This may be done by adding the outputs of two RNNs, such as one processing the sequence from left to right, the other one from right to left. The combined outputs are the predictions of target signals, such as those provided by a teacher or supervisor. A bi-directional RNN may be combined with a long short-term memory RNN.

**[0935]** In embodiments, methods and systems described herein that involve an expert system or self-organization capability may use a hierarchical RNN that connects elements in various ways to decompose hierarchical behavior, such as into useful subprograms. In embodiments, a hierarchical RNN may be used to manage one or more hierarchical templates for data collection in an industrial environment.

**[0936]** In embodiments, methods and systems described herein that involve an expert system or self-organization capability may use a stochastic neural network, which may introduce random variations into the network. Such random variations can be viewed as a form of statistical sampling, such as Monte Carlo sampling.

**[0937]** In embodiments, methods and systems described herein that involve an expert system or self-organization capability may use a genetic scale recurrent neural network. In such embodiments, a RNN (often a LSTM) is used where a series is decomposed into a number of scales where every scale informs the primary length between two consecutive points. A first order scale consists of a normal RNN, a second order consists of all points separated by two indices and so on. The Nth order RNN connects the first and last node. The outputs from all the various scales may be treated as a committee of members, and the associated scores may be used genetically for the next iteration.

**[0938]** In embodiments, methods and systems described herein that involve an expert system or self-organization capability may use a committee of machines ("CoM"), comprising a collection of different neural networks that together "vote" on a given example. Because neural networks may suffer from local minima, starting with the same architecture and training, but using randomly different initial weights often gives different results. A CoM tends to stabilize the result.

**[0939]** In embodiments, methods and systems described herein that involve an expert system or self-organization capability may use an associative neural network ("ASNN"), such as involving an extension of committee of machines that combines multiple feed forward neural networks and a k-nearest neighbor technique. It may use the correlation between ensemble responses as a measure of distance amid the analyzed cases for the kNN. This corrects the bias of the neural network ensemble. An associative neural network may have a memory that can coincide with a training set. If new data become available, the network instantly improves its predictive ability and provides data approximation (self-learns) without retraining. Another important feature of ASNN is the possibility to interpret neural network results by analysis of correlations between data cases in the space of models.

**[0940]** In embodiments, methods and systems described herein that involve an expert system or self-organization capability may use an instantaneously trained neural network ("ITNN"), where the weights of the hidden and the output layers are mapped directly from training vector data.

**[0941]** In embodiments, methods and systems described herein that involve an expert system or self-organization capability may use a spiking neural network, which may explicitly consider the timing of inputs. The network input and output may be represented as a series of spikes (such as a delta function or more complex shapes). SNNs can process information in the time domain (e.g., signals that vary over time, such as signals involving dynamic behavior of industrial machines). They are often implemented as recurrent networks.

**[0942]** In embodiments, methods and systems described herein that involve an expert system or self-organization capability may use a dynamic neural network that addresses nonlinear multivariate behavior and includes learning of time-dependent behavior, such as transient phenomena and delay effects. Transients may include behavior of shifting industrial components, such as variable speeds of rotating shafts or other rotating components.

**[0943]** In embodiments, cascade correlation may be used as an architecture and supervised learning algorithm, supplementing adjustment of the weights in a network of fixed topology. Cascade-correlation may begin with a minimal network, then automatically trains and adds new hidden units one by one, creating a multi-layer structure. Once a new hidden unit has been added to the network, its input-side weights may be frozen. This unit then becomes a permanent feature-detector in the network, available for producing outputs or for creating other, more complex feature detectors. The cascade-correlation architecture may learn quickly, determine its own size and topology, and retain the structures it has built even if the training set changes and requires no back-propagation.

**[0944]** In embodiments, methods and systems described herein that involve an expert system or self-organization capability may use a neuro-fuzzy network, such as involving a fuzzy inference system in the body of an artificial neural network. Depending on the type, several layers may simulate the processes involved in a fuzzy inference, such as fuzzification, inference, aggregation and defuzzification. Embedding a fuzzy system in a general structure of a neural net as the benefit of using available training methods to find the parameters of a fuzzy system.

**[0945]** In embodiments, methods and systems described herein that involve an expert system or self-organization capability may use a compositional pattern-producing network ("CPPN"), such as a variation of an associative neural network ("ANN") that differs the set of activation functions and how they are applied. While typical ANNs often contain only sigmoid functions (and sometimes Gaussian functions), CPPNs can include both types of functions and many others. Furthermore, CPPNs may be applied across the entire space of possible inputs, so that they can represent a complete image. Since they are compositions of functions, CPPNs in effect encode images at infinite resolution and can be sampled for a particular display at whatever resolution is optimal.

**[0946]** This type of network can add new patterns without re-training. In embodiments, methods and systems described herein that involve an expert system or self-organization capability may use a one-shot associative memory network, such as by creating a specific memory structure, which assigns each new pattern to an orthogonal plane using adjacently connected hierarchical arrays.

**[0947]** In embodiments, methods and systems described herein that involve an expert system or self-organization capability may use a hierarchical temporal memory ("HTM") neural network, such as involving the structural and algorithmic properties of the neocortex. HTM may use a biomimetic model based on memory-prediction theory. HTM may be used to discover and infer the high-level causes of observed input patterns and sequences.

**[0948]** In embodiments, methods and systems described herein that involve an expert system or self-organization capability may use a holographic associative memory ("HAM") neural network, which may comprise an analog, correlation-based, associative, stimulus-response system. Information may be mapped onto the phase orientation of complex numbers. The memory is effective for associative memory tasks, generalization and pattern recognition with changeable attention.

**[0949]** In embodiments, various embodiments involving network coding may be used to code transmission data among network nodes in neural net, such as where nodes are located in one or more data collectors or machines in an industrial environment.

**[0950]** Clause 1. In embodiments, an expert system for processing a plurality of inputs collected from sensors in an industrial environment, comprising: A modular neural network, where the expert system uses one type of neural network for recognizing a pattern and a different neural network for self-organizing an activity in the industrial environment. 2. A system of clause 1, wherein the pattern indicates a fault condition of a machine. 3. A system of clause 1, wherein the self-organized activity governs autonomous control of a system in the environment. 4. A system of clause 3, wherein the expert system organizes the activity based at least in part on the recognized pattern. 5. An expert system for processing a plurality of inputs collected from sensors in an industrial environment, comprising:
a modular neural network, where the expert system uses one neural network for classifying an item and a different neural network for predicting a state of the item. 6. A system of clause 5, wherein classifying an item includes at least one of identifying a machine, a component, and an operational mode of a machine in the environment. 7. A system of clause 5, wherein predicting a state includes predicting at least one

of a fault state, an operational state, an anticipated state, and a maintenance state. 8. An expert system for processing a plurality of inputs collected from sensors in an industrial environment, comprising: a modular neural network, where the expert system uses one neural network for determining at least one of a state and a context and a different neural network for self-organizing a process involving the at least one state or context. 9. A system of clause 8, wherein the state or context includes at least one state of a machine, a process, a work flow, a marketplace, a storage system, a network, and a data collector. 10. A system of clause 8, wherein the self-organized process includes at least one of a data storage process, a network coding process, a network selection process, a data marketplace process, a power generation process, a manufacturing process, a refining process, a digging process, and a boring process. 11. An expert system for processing a plurality of inputs collected from sensors in an industrial environment, comprising: a modular neural network, comprising at least two neural networks selected from the group consisting of feed forward neural networks, radial basis function neural networks, self-organizing neural networks, Kohonen self-organizing neural networks, recurrent neural networks, modular neural networks, artificial neural networks, physical neural networks, multi-layered neural networks, convolutional neural networks, a hybrids of a neural networks with another expert system, auto-encoder neural networks, probabilistic neural networks, time delay neural networks, convolutional neural networks, regulatory feedback neural networks, radial basis function neural networks, recurrent neural networks, Hopfield neural networks, Boltzmann machine neural networks, self-organizing map ("SOM") neural networks, learning vector quantization ("LVQ") neural networks, fully recurrent neural networks, simple recurrent neural networks, echo state neural networks, long short-term memory neural networks, bi-directional neural networks, hierarchical neural networks, stochastic neural networks, genetic scale RNN neural networks, committee of machines neural networks, associative neural networks, physical neural networks, instantaneously trained neural networks, spiking neural networks, neocognition neural networks, dynamic neural networks, cascading neural networks, neuro-fuzzy neural networks, compositional pattern-producing neural networks, memory neural networks, hierarchical temporal memory neural networks, deep feed forward neural networks, gated recurrent unit ("GCU") neural networks, auto encoder neural networks, variational auto encoder neural networks, de-noising auto encoder neural networks, sparse auto-encoder neural networks, Markov chain neural networks, restricted Boltzmann machine neural networks, deep belief neural networks, deep convolutional neural networks, deconvolutional neural networks, deep convolutional inverse graphics neural networks, generative adversarial neural networks, liquid state machine neural networks, extreme learning machine neural networks, echo state neural networks, deep residual neural networks, support vector machine neural networks, neural Turing machine neural networks, and holographic associative memory neural networks. 12. A system for collecting data in an industrial environment, comprising A physical neural network embodied in a mobile data collector, wherein the mobile data collector is adapted to be reconfigured by routing inputs in varying configurations, such that different neural net configurations are enabled within the data collector for handling different types of inputs. 13. A system of clause 12, wherein reconfiguration occurs under control of an expert system. 14. A system of clause 13, wherein the expert system includes a software-based neural net. 15. A system of clause 14, wherein the software-based system is located on the data collector. 16. A system of clause 14, wherein the software-based system is located remotely from the data collector. 17. A system for processing data collected from an industrial environment, the system comprising: a plurality of neural networks deployed in a cloud platform that receives data streams and other inputs collected from one or more industrial environments and transmitted to the cloud platform over one or more networks, wherein the neural networks are of different types. 18. A system of clause 17, wherein the plurality of neural networks includes at least one modular neural network. 19. A system of clause 17, wherein the plurality of neural networks includes at least one structure-adaptive neural network. 20. A system of clause 17, wherein the neural networks are structured to compete with each other under control of an expert system, such as by processing input data sets from the same industrial environment to provide outputs and comparing the outputs to at least one measure of success. 21. A system of clause 20, wherein a genetic algorithm is used to facilitate variation and selection for the competing neural networks. 22. A system of clause 20, wherein the measure of success includes at least one of the following measures: a measure of predictive accuracy, a measure of classification accuracy, an efficiency measure, a profit measure, a maintenance measure, a safety measure, and a yield measure. 23. A system, comprising: a network coding system for coding transmission of data among network nodes in neural network, wherein the nodes comprise hardware devices located in at least one of one or more data collectors, one or more storage systems, and one or more network devices located in an industrial environment.

**[0951]** Within the data collection, monitoring, and control environment of the industrial IoT are large and various sensor sets, which make efficient setup and timely changes to sensor data collection a challenge. Continuous collection from all sensors may be impossible given the large number of sensors and limited resources, such as limited availability of power and limited data collection and management facilities, including various limitations in availability and performance of sensor data collection devices, input/output interfaces, data transfer facilities, data storage, data analysis facilities, and the like. The number of sensors collected from at any given time must therefore be limited in an intelligent but timely manner, both at the time of setting up initial collection and during the process of collection, including handling rapid changes to a present collection scheme based on a change in state of a system, operational conditions (e.g., an alert condition, change in operational mode, etc.), or the like. Embodiments of the methods and systems disclosed herein may therefore include rapid route creation and modification for routing collectors, such as by taking advantage of hierarchical templates, execution of smart route changes, monitoring and responding to changes in operational conditions, and the like.

**[0952]** In embodiments, rapid route creation and modification for data collection in an industrial environment may take advantage of hierarchical templates. Templates may be used to take advantage of 'like' machinery that can utilize the same hierarchical sensor routing scheme. For example, among many possible types of machines about which data

may be collected, the members of a certain class of motor, such as a stepper motor class, may have very similar sensor routing needs, such as for routine operations, routine maintenance, and failure mode detection, that may be described in a common hierarchy of sensor collection routines. The user installing a new stepper motor may then use the 'stepper motor hierarchical routing template' for the new motor. After installation, the stepper motor hierarchical routing template may then be used to change the routing schemes for changing conditions. The user may optionally make adjustments to the template as needed per unique motor functions, applications, environments, modes, and the like. The use of a template for deploying a routing scheme greatly reduces the time a user requires to configure the routing scheme for a new motor, or to deploy new routing technologies on an existing system that utilizes traditional sensor collection methods. Once the hierarchical routing template is in place, the sensor collection routine may be changed quickly based on the template, thus allowing for rapid route modification under changing conditions, such as: a change in the operating mode of the stepper motor that requires a different subset of sensors for monitoring, a limit alert or failure indication that requires a more focused subset of sensors for use in diagnosing the problem, and the like. Hierarchical routing templates thus allow for rapid deployment of sensor routing configurations, as well as allowing the sensed industrial environment to be altered dynamically as conditions change.

**[0953]** A functional hierarchy of routing templates may include different hierarchical configurations for a component, machine, system, industrial environment, and the like, including all sensors and a plurality of configurations formed from a subset of all sensors. At a system level, an 'all-sensor' configuration may include: a connection map to all sensors in a system, mapping to all onboard instrumentation sensors (e.g., monitoring points reporting within a machine or set of machines), mapping to an environment's sensors (e.g., monitoring points around the machines/equipment, but not necessarily onboard), mapping to available sensors on data collectors (e.g., data collectors that can be flexibly provisioned for particular data among different kinds), a unified map combining different individual mappings, and the like. A routing configuration may be provided, such as to indicate how to implement an operational routing scheme, a scheduled maintenance routing scheme (e.g., collecting from a greater set of overall sensors than in operational mode, but distributed across the system, or a focused sensor set for specific components, functions, and modes), one or more failure mode routing schemes for multiple focused sensor collection groups targeting different failure mode analyses (e.g., for a motor, one failure mode may be for bearings, another for startup speed-torque, where a different subset of sensor data is needed based on the failure mode, such as detected in anomalous readings taken during operations or maintenance), power savings (e.g., weather conditions necessitating reduced plant power), and the like.

**[0954]** As noted, hierarchical templates may also be conditional (e.g., rule-based), such as templates with conditional routing based on parameters, such as sensed data during a first collection period, where a subsequent routing configuration is varied. Within the hierarchy, nodes in a graph or tree may indicate forks by which conditional logic may be used, such as to select a given subset of sensors for a given operational mode. Thus, the hierarchical template may be associated with a rule-based or model-based expert system, which may facilitate automated routing based on the hierarchical template and based on observed conditions, such as based on a type of machine and its operational state, environmental context, or the like. In a non-limiting example, a hierarchical template may have an initial collection configuration and a conditional hierarchy in place to switch from the initial collection configuration to a second collection configuration based on the sensed conditions of an initial sensor collection. Continuing this example, among various possible machines, a conveyor system may have a plurality of sensors for collection in an initial collection, but once the first data is collected and analyzed, if the conveyor is determined to be in an idle state (such as due to the absence of a signal above a minimum threshold on a motion sensor), then the system may switch to a sensor data collection regime that is appropriate for the idles state of the conveyor (e.g., using a very small subset of the plurality of sensors, such as just using the motion sensor to detect departure from the idle state, at which point the original regime may be renewed and the rest of a sensor set may be re-engaged). Thus, when the collection of sensor data detects a changed condition to a state, an operational mode, an environmental condition, or the like, the sensor data collection may be switched to an appropriate configuration.

**[0955]** Hierarchical templates for one collector may be based on coordination of routing with that of other collectors. For instance, a collector might be set up to perform vibration analysis while another collector is set up to perform pressure or temperature on each machine in a set of similar machines, rather than having each machine collect all of the data on each machine, where otherwise setup for different sensor types may be required for each collector for each machine. Factors such as the duration of sampling required, the time required to set up a given sensor, the amount of power consumed, the time available for collection as a whole, the data rate of input/output of a sensor and/or the collector, the bandwidth of a channel (wired or wireless) available for transmission of collected data, and the like can be considered in arranging the coordination of the routing of two or more collectors, such that various parallel and serial configurations may be undertaken to achieve an overall effectiveness. This may include optimizing the coordination using an expert system, such as a rule-based optimization, a model-based optimization, or optimization using machine learning.

**[0956]** A machine learning system may create a hierarchical template structure for improved routing, such as for teaching the system the default operating conditions (e.g., normal operations mode, systems online and average production), peak operations mode (max capability), slack production, and the like. The machine learning system may create a new hierarchical template based on monitored conditions, such as a template based on a production level profile, a rate of production profile, a detected failure mode pattern analysis, and the like. The application of a new machine learning created template may be based on a mode matching between current production conditions and a machine learning template condition (e.g., the machine learning system creates a new template for a new production profile, and applies that new template whenever that new profile is detected).

**[0957]** Rapid route creation may be enabled using one or more hierarchical routing templates, such as when a routing template pre-establishes a routing scheme for different conditions, and when a trigger event executes a change in the sensor routing scheme to accommodate the condition. In embodiments, the trigger event may be an automatic change in routing based on a trigger that indicates a possible failure mode that forces a change in routing scheme from operational to failure mode analysis; a human-executed change in routing scheme based on received sensor data; a learned routing change based on machine learning of when to trigger a change (e.g., as based on a machine being fed with a set of human-executed or human-supervised changes); a manual routing change (e.g., optional to automatic/rapid automatic change); a human executed change based on observed device performance; and the like. Routing changes may include: changing from an operational mode to an accelerated maintenance, a failure mode analysis, a power saving mode a high-performance/high-output mode (e.g., for peak power in a generation plant), and the like.

**[0958]** Switching hierarchical template configurations may be executed based on connectivity with end-device sensors. In a highly automated collection routing environment (e.g., an indoor networked assembly plant) different routing collection configurations may be employed for fixed and flexible industrial layouts. In a fixed industrial layout, such as a layout with a high degree of wired connectivity between end-device sensors, automated collectors, and networks, there may be different routing configurations for a network routing hierarchy portion, a collector sensor-collection hierarchy portion, a storage portion, and the like. For a more flexible industrial layout with various wired and wireless connections between end-device sensors, automated collectors, and networks, there may be different schemes. For instance, a moderately automated collection routing environment may include: automatic collection and periodic network connection; a robot-carried collector for periodic collection (e.g., a ground-based robot, a drone, an underwater device, a robot with network connection, a robot with intermittent network connection, a robot that periodically uploads collection); a routing scheme with periodic collection and automated routing; a scheme only collecting periodically but routed directly upon collection; a routing scheme with periodic collection and periodic automated routing to collect periodically; and, over longer periods of time, periodically routing multiple collections; and the like. For a lower degree of automated collection routing, there may be a combination of: automatic collection and human-aided collectors (e.g., humans collecting alone, humans aided by robots), scheduled collection and human-aided collectors (e g, humans initiating collection, humans aided by robots for collection initiation, human launching a drone to collect data at a remote site), and the like.

**[0959]** In embodiments, and referring to FIG. **137**, hierarchical templates may be utilized by a local data collection system **10500** for collection and monitoring of data collected through a plurality of input channels **10500**, such as data from sensors **10514**, IoT devices **10516**, and the like. The local collection system **10512**, also referred to herein as a data collector **10512**, may comprise a data storage **10502**; a data acquisition circuit **10504**; a data analysis circuit **10506**; and the like, wherein the monitoring facilities may be deployed: locally on the data collector **10512**; in part locally on the data collector and in part on a remote information technology infrastructure component apart from the data collector; and the like. A monitoring system may comprise a plurality of input channels communicatively coupled to the data collector **10512**. The data storage **10502** may be structured to store a plurality of collector route templates **10510** and sensor specifications for sensors **10514** that correspond to the input channels **10500**, wherein the plurality of collector route templates **10510** each comprise a different sensor collection routine. A data acquisition circuit **10504** may be structured to interpret a plurality of detection values, each of the plurality of detection values corresponding to at least one of the input channels **10500**, and a data analysis circuit **10506** structured to receive output data from the plurality of input channels **10500** and evaluate a current routing template collection routine based on the received output data, wherein the data collector **10500** is configured to switch from the current routing template collection routine to an alternative routing template collection routine based on the content of the output data. The monitoring system may further utilize a machine learning system (e.g., a neural network expert system), rule-based templates (e.g., based on an operational state of a machine with respect to which the input channels provide information, the input channels provide information, the input channels provide information), smart route changes, alarm states, network connectivity, self-organization amongst a plurality of data collectors, coordination of sensor groups, and the like.

**[0960]** In embodiments, evaluation of the current routing templates may be based on operational mode routing collection schemes, such as a normal operational mode, a peak operational mode, an idle operational mode, a maintenance operational mode, a power saving operational mode, and the like. As a result of monitoring, the data collector may switch from a current routing template collection routine because the data analysis circuit determines a change in operating modes, such as the operating mode changing from an operational mode to an accelerated maintenance mode, the operating mode changing from an operational mode to a failure mode analysis mode, the operating mode changing from an operational mode to a power-saving mode, the operating mode changing from an operational mode to a high-performance mode, and the like. The data collector may switch from a current routing template collection routine based on a sensed change in a mode of operation, such as a failure condition, a performance condition, a power condition, a temperature condition, a vibration condition, and the like. The evaluation of the current routing template collection routine may be based on a collection routine with respect to a collection parameter, such as network availability, sensor availability, a time-based collection routine (e.g., on a schedule, over time), and the like.

**[0961]** In embodiments, a monitoring system for data collection in an industrial environment may comprise: a data collector communicatively coupled to a plurality of input channels; a data storage structured to store a plurality of collector route templates and sensor specifications for sensors that correspond to the input channels, wherein the plurality of collector route templates each comprise a different sensor collection routine; a data acquisition circuit structured to interpret a plurality of detection values, each of the plurality of detection values corresponding to at least one of the input channels; and a data analysis circuit structured to receive output data from the plurality of input channels and evaluate a current routing template collection routine

based on the received output data, wherein the data collector is configured to switch from the current routing template collection routine to an alternative routing template collection routine based on the content of the output data. In embodiments, the system is deployed locally on the data collector, in part locally on the data collector and in part on a remote information technology infrastructure component apart from the collector, and the like. Each of the input channels may correspond to a sensor located in the environment. The evaluation of the current routing template may be based on operational mode routing collection schemes. The operational mode is at least one of a normal operational mode, a peak operational mode, an idle operational mode, a maintenance operational mode, and a power saving operational mode. The data collector may switch from the current routing template collection routine because the data analysis circuit determines a change in operating modes, such as where the operating mode changes from an operational mode to an accelerated maintenance mode, from an operational mode to a failure mode analysis mode, from an operational mode to a power saving mode, from an operational mode to high-performance mode, and the like. The data collector may switch from the current routing template collection routine based on a sensed change in a mode of operation, such as where the sensed change is a failure condition, a performance condition, a power condition, a temperature condition, a vibration condition, and the like. The evaluation of the current routing template collection routine may be based on a collection routine with respect to a collection parameter, such as where the parameter is network availability, sensor availability, a time-based collection routine (e.g., where a routine collects sensor data on a schedule, evaluates sensor data over time).

**[0962]** In embodiments, a computer-implemented method for implementing a monitoring system for data collection in an industrial environment may comprise: providing a data collector communicatively coupled to a plurality of input channels; providing a data storage structured to store a plurality of collector route templates and sensor specifications for sensors that correspond to the input channels, wherein the plurality of collector route templates each comprise a different sensor collection routine; providing a data acquisition circuit structured to interpret a plurality of detection values, each of the plurality of detection values corresponding to at least one of the input channels; and providing a data analysis circuit structured to receive output data from the plurality of input channels and evaluate a current routing template collection routine based on the received output data, wherein the data collector is configured to switch from the current routing template collection routine to an alternative routing template collection routine based on the content of the output data. In embodiments, the computer-implemented method is deployed locally on the data collector, such as deployed in part locally on the data collector and in part on a remote information technology infrastructure component apart from the collector, where each of the input channels correspond to a sensor located in the environment.

**[0963]** In embodiments, one or more non-transitory computer-readable media comprising computer executable instructions that, when executed, may cause at least one processor to perform actions comprising: providing a data collector communicatively coupled to a plurality of input channels; providing a data storage structured to store a plurality of collector route templates and sensor specifications for sensors that correspond to the input channels, wherein the plurality of collector route templates each comprise a different sensor collection routine; providing a data acquisition circuit structured to interpret a plurality of detection values, each of the plurality of detection values corresponding to at least one of the input channels; and providing a data analysis circuit structured to receive output data from the plurality of input channels and evaluate a current routing template collection routine based on the received output data, wherein the data collector is configured to switch from the current routing template collection routine to an alternative routing template collection routine based on the content of the output data. In embodiments, the instructions may be deployed locally on the data collector, such as deployed in part locally on the data collector and in part on a remote information technology infrastructure component apart from the collector, where each of the input channels correspond to a sensor located in the environment.

**[0964]** In embodiments, a monitoring system for data collection in an industrial environment may comprise a data collector communicatively coupled to a plurality of input channels; a data storage structured to store a plurality of collector route templates, sensor specifications for sensors that correspond to the input channels, wherein the plurality of collector route templates each comprise a different sensor collection routine; a data acquisition circuit structured to interpret a plurality of detection values, each of the plurality of detection values corresponding to at least one of the input channels; and a machine learning data analysis circuit structured to receive output data from the plurality of input channels and evaluate a current routing template collection routine based on the received output data received over time, wherein the machine learning data analysis circuit learns received output data patterns, wherein the data collector is configured to switch from the current routing template collection routine to an alternative routing template collection routine based on the learned received output data patterns. In embodiments, the monitoring system may be deployed locally on the data collector, such as deployed in part locally on the data collector and in part on a remote information technology infrastructure component apart from the collector, where each of the input channels correspond to a sensor located in the environment. The machine learning data analysis circuit may include a neural network expert system. The evaluation of the current routing template may be based on operational mode routing collection schemes. The operational mode may be at least one of a normal operational mode, a peak operational mode, an idle operational mode, a maintenance operational mode, and a power saving operational mode. The data collector may switch from the current routing template collection routine because the data analysis circuit determines a change in operating modes, such as where the operating mode changes from an operational mode to an accelerated maintenance mode, from an operational mode to a failure mode analysis mode, from an operational mode to a power saving mode, from an operational mode to high-performance mode, and the like. The data collector may switch from the current routing template collection routine based on a sensed change in a mode of operation, such as where the sensed change is a failure condition, a performance condition, a power condition, a temperature condition, a vibration condition, and the like. The evaluation of the current routing template collec-

tion routine may be based on a collection routine with respect to a collection parameter, such as where the parameter is network availability, a sensor availability, a time-based collection routine (collects sensor data on a schedule, evaluates sensor data over time).

**[0965]** In embodiments, a computer-implemented method for implementing a monitoring system for data collection in an industrial environment may comprise: providing a data collector communicatively coupled to a plurality of input channels; providing a data storage structured to store a plurality of collector route templates, sensor specifications for sensors that correspond to the input channels, wherein the plurality of collector route templates each comprise a different sensor collection routine; providing a data acquisition circuit structured to interpret a plurality of detection values, each of the plurality of detection values corresponding to at least one of the input channels; and providing a machine learning data analysis circuit structured to receive output data from the plurality of input channels and evaluate a current routing template collection routine based on the received output data received over time, wherein the machine learning data analysis circuit learns received output data patterns, wherein the data collector is configured to switch from the current routing template collection routine to an alternative routing template collection routine based on the learned received output data patterns. In embodiments, the method may be deployed locally on the data collector, such as deployed in part locally on the data collector and in part on a remote information technology infrastructure component apart from the collector, where each of the input channels correspond to a sensor located in the environment.

**[0966]** In embodiments, one or more non-transitory computer-readable media comprising computer executable instructions that, when executed, may cause at least one processor to perform actions comprising: providing a data collector communicatively coupled to a plurality of input channels; providing a data storage structured to store a plurality of collector route templates, sensor specifications for sensors that correspond to the input channels, wherein the plurality of collector route templates each comprise a different sensor collection routine; providing a data acquisition circuit structured to interpret a plurality of detection values, each of the plurality of detection values corresponding to at least one of the input channels; and providing a machine learning data analysis circuit structured to receive output data from the plurality of input channels and evaluate a current routing template collection routine based on the received output data received over time, wherein the machine learning data analysis circuit learns received output data patterns, wherein the data collector is configured to switch from the current routing template collection routine to an alternative routing template collection routine based on the learned received output data patterns. In embodiments, the instructions may be deployed locally on the data collector, such as deployed in part locally on the data collector and in part on a remote information technology infrastructure component apart from the collector, where each of the input channels correspond to a sensor located in the environment.

**[0967]** In embodiments, a monitoring system for data collection in an industrial environment may comprise: a data collector communicatively coupled to a plurality of input channels; a data storage structured to store a collector route template, sensor specifications for sensors that correspond to the input channels, wherein the collector route template comprises a sensor collection routine; a data acquisition circuit structured to interpret a plurality of detection values, each of the plurality of detection values corresponding to at least one of the input channels; and a data analysis circuit structured to receive output data from the plurality of input channels and evaluate the received output data with respect to a rule, wherein the data collector is configured to modify the sensor collection routine based on the application of the rule to the received output data. In embodiments, the system may be deployed locally on the data collector, such as deployed in part locally on the data collector and in part on a remote information technology infrastructure component apart from the collector, where each of the input channels correspond to a sensor located in the environment. The rule may be based on an operational state of a machine with respect to which the input channels provide information, on an anticipated state of a machine with respect to which the input channels provide information, on a detected fault condition of a machine with respect to which the input channels provide information, and the like. The evaluation of the received output data may be based on operational mode routing collection schemes, where the operational mode is at least one of a normal operational mode, a peak operational mode, an idle operational mode, a maintenance operational mode, and a power saving operational mode. The data collector may modify the sensor collection routine because the data analysis circuit determines a change in operating modes, such as where the operating mode changes from an operational mode to an accelerated maintenance mode, from an operational mode to a failure mode analysis mode, from an operational mode to a power saving mode, from an operational mode to high-performance mode, and the like. The data collector may modify the sensor collection routine based on a sensed change in a mode of operation, such as where the sensed change is a failure condition, a performance condition, a power condition, a temperature condition, a vibration condition, and the like. The evaluation of the received output data may be based on a collection routine with respect to a collection parameter, wherein the parameter is a network availability, a sensor availability, a time-based collection routine (e.g., collects sensor data on a schedule or over time), and the like.

**[0968]** In embodiments, a computer-implemented method for implementing a monitoring system for data collection in an industrial environment may comprise: providing a data collector communicatively coupled to a plurality of input channels; providing a data storage structured to store a collector route template, sensor specifications for sensors that correspond to the input channels, wherein the collector route template comprises a sensor collection routine; providing a data acquisition circuit structured to interpret a plurality of detection values, each of the plurality of detection values corresponding to at least one of the input channels; and providing a data analysis circuit structured to receive output data from the plurality of input channels and evaluate the received output data with respect to a rule, wherein the data collector is configured to modify the sensor collection routine based on the application of the rule to the received output data. In embodiments, the method may be deployed locally on the data collector, such as deployed in part locally on the data collector and in part on a remote information technology infrastructure component apart from the collector, where each of the input channels correspond to a sensor located in the environment.

**[0969]** In embodiments, one or more non-transitory computer-readable media comprising computer executable instructions that, when executed, may cause at least one processor to perform actions comprising: providing a data collector communicatively coupled to a plurality of input channels; providing a data storage structured to store a collector route template, sensor specifications for sensors that correspond to the input channels, wherein the collector route template comprises a sensor collection routine; providing a data acquisition circuit structured to interpret a plurality of detection values, each of the plurality of detection values corresponding to at least one of the input channels; and providing a data analysis circuit structured to receive output data from the plurality of input channels and evaluate the received output data with respect to a rule, wherein the data collector is configured to modify the sensor collection routine based on the application of the rule to the received output data. In embodiments, the instructions may be deployed locally on the data collector, such as deployed in part locally on the data collector and in part on a remote information technology infrastructure component apart from the collector, where each of the input channels correspond to a sensor located in the environment.

**[0970]** Rapid route creation and modification in an industrial environment may employ smart route changes based on incoming data or alarms, such as changes enabling dynamic selection of data collection for analysis or correlation. Smart route changes may enable the system to alter current routing of sensor data based on incoming data or alarms. For instance, a user may set up a routing configuration that establishes a schedule of sensor collection for analysis, but when the analysis (or an alarm) indicates a special need, the system may change the sensor routing to address that need. For example, in the case where a change in a motor vibration profile (as one example among any of the machines described throughout this disclosure), such as rapidly increasing the peak amplitude of shaking on at least one axis of a vibration sensor set, that indicates a potential early failure of the motor, the system may change the routing to collect more focused data collection for analysis, such as initiating collection on more axes of the motor, initiating collection on additional bearings of the motor, and/or initiating collection using other sensors (such as temperature or heat flux sensors), that may confirm an initial hypothesis that the failure mode is occurring or otherwise assist in analysis of the state or operational condition of the machine.

**[0971]** Detected operational mode changes may trigger a rapid route change. For instance, an operational mode may be detected as the result of a single-point sensor out-of-range detection, an analysis determination, and the like, and generate a routing change. An analysis determination may be detected from a sensor end-point, such as through a single-point sensor analysis, a multiple-point sensor analysis, an analysis domain analysis (e.g., through a time profile, frequency profile, correlated multi-point determination), and the like. In another instance, a maintenance mode may be detected during routine maintenance, where a routing change increases data collection to capture data at a higher rate under an anomalous condition. A failure mode may be detected, such as through an alarm that indicates near-term potential for a failure of a machine that triggers increased data capture rate for analysis. Performance-based modes may be detected, such as detecting a level of output rate (e.g., peak, slack, idle), which may then initiate changes in routing to accommodate the analysis needs for the different performance monitoring and metrics associated with the state. For example, if a high peak speed is detected for a motor, a conveyor, an assembly line, a generator, a turbine, or the like, relative to historical measurements over some time period, additional sensors may be engaged to watch for failures that are typically associated with peak speeds, such as overheating (as measured by engaging a temperature or heat flux sensor), excessive noise (as measured by an acoustic or noise sensor), excessive shaking (as measured by one or more vibration sensors), or the like.

**[0972]** Alarm detections may trigger a rapid route change. Alarm sources may include a front-end collector, local intelligence resource, back-end data analysis process, ambient environment detector, network quality detector, power quality detector, heat, smoke, noise, flooding, and the like. Alarm types may include a single-instance anomaly detection, multiple-instance anomaly detection, simultaneous multi-sensor detection, time-clustered sensor detection (e.g., a single sensor or multiple sensors), frequency-profile detection (e.g., increasing rate of anomaly detection such as an alarm increasing in its occurrence over time, a change in a frequency component of a sensor output such as a motor's physical vibration profile changing over time), and the like.

**[0973]** A machine learning system may change routing based on learned alarm pattern analysis. The machine learning system may learn system alarm condition patterns, such as alarm conditions expected under normal operating conditions, under peak operating conditions, expected over time based on age of components (e.g., new, during operational life, during extended life, during a warrantee period), and the like. The machine learning system may change routing based on a change in an alarm pattern, such as a system operating normally but experiencing a peak operating alarm pattern (e.g., a system running when it should not be), a system is new but experiencing an older profile (e.g., detection of infant mortality), and the like. The machine learning system may change routing based on a current alarm profile vs. an expected change in production condition. For example, a plant, system, or component is experiencing above average alarm conditions just before a ramp-up of production (e.g., could be foretelling of above average failures during increased production), just before going slack (e.g., could be an opportunity to ramp up maintenance procedures based on increased data taking routing scheme), after an unplanned event (e.g., weather, power outage, restart), and the like.

**[0974]** A rapid route change action may include: an increased rate of sampling (e.g., to a single sensor, to multiple sensors), an increase in the number of sensors being sampled (e.g., simultaneous sampling of other sensors on a device, coordinated sampling of similar sensors on near-by devices), generating a burst of sampling (e.g., sampling at a high rate for a period of time), and the like. Actions may be executed on a schedule, coordinated with a trigger, based on an operational mode, and the like. Triggered actions may include: anomalous data, an exceeded threshold level, an operational event trigger (e.g., at startup condition such as for startup motor torque), and the like.

**[0975]** A rapid route change may switch between routing schemes, such as an operational routing scheme (e.g., a subset of sensor collection for normal operations), a scheduled maintenance routing scheme (e.g., an increased and focused set of sensor collection than for normal operations),

and the like. The distribution of sensor data may be changed, such as to distribute sensor collection across the system, such as for a sensor collection set for specific components, functions, and modes. A failure mode routing scheme may entail multiple focused sensor collection groups targeting different failure mode analyses (e.g., for a motor, one failure mode may be for bearings, another for startup speed-torque) where a different subset of sensor data may be needed based on the failure mode (e.g., as detected in anomalous readings taken during operations or maintenance). Power saving mode routing may be executed when weather conditions necessitate reduced plant power.

**[0976]** Dynamic adjustment of route changes may be executed based on connectivity factors, such as the factors associated with the collector or network availability and bandwidth. For example, routing may be changed for a device associated with an alarm detection, where changing routing for targeted devices on the network frees up bandwidth. Changes to routing may have a duration, such as only for a pre-determined period of time and then switching back, maintaining a change until user-directed, changing duration based on network availability, and the like.

**[0977]** In embodiments, and referring to FIG. **139**, smart route changes may be implemented by a local data collection system **10520** for collection and monitoring of data collected through a plurality of input channels **10500**, such as data from sensors **10522**, IoT devices **10524**, and the like. The local collection system **102**, also referred to herein as a data collector **10520**, may comprise a data storage **10502**, a data acquisition circuit **10504**, a data analysis circuit **10506**, a response circuit **10508**, and the like, wherein the monitoring facilities may be deployed locally on the data collector **10520**, in part locally on the data collector and in part on a remote information technology infrastructure component apart from the data collector, and the like. Smart route changes may be implemented between data collectors, such as where a state message is transmitted between the data collectors (e.g., from an input channel that is mounted in proximity to a second input channel, from a related group of input sensors, and the like). A monitoring system may comprise a plurality of input channels **10500** communicatively coupled to the data collector **10520**. The data acquisition circuit **10504** may be structured to interpret a plurality of detection values, each of the plurality of detection values corresponding to at least one of the input channels **10500**, wherein the data acquisition circuit **10504** acquires sensor data from a first route of input channels for the plurality of input channels. The data storage **10502** may be structured to store sensor data, sensor specifications, and the like, for sensors **10524** that correspond to the input channels **10500**. The data analysis circuit **10506** may be structured to evaluate the sensor data with respect to stored anticipated state information, wherein the anticipated state information may include an alarm threshold level, and wherein the data analysis circuit **10506** sets an alarm state when the alarm threshold level is exceeded for a first input channel in the first group of input channels. Further, the data analysis circuit **10506** may transmit the alarm state across a network to a routing control facility **10512**. The response circuit **10508** may be structured to change the routing of the input channels for data collection from the first routing of input channels to an alternate routing of input channels upon reception of a routing change indication from the routing control facility. In the case of a network transmission, the alternate routing of input channels may include the first input channel and a group of input channels related to the first input channel, where the data collector executes the change in routing of the input channels if a communication parameter of the network between the data collector and the routing control facility is not met (e.g., a time-period parameter, a network connection and/or bandwidth availability parameter).

**[0978]** In embodiments, an alarm state may indicate a detection mode, such as an operational mode detection comprising an out-of-range detection, a maintenance mode detection comprising an alarm detected during maintenance, a failure mode detection (e.g., where the controller communicates a failure mode detection facility), a power mode detection wherein the alarm state is indicative of a power related limitation data of the anticipated state information, a performance mode detection wherein the alarm state is indicative of a high-performance limitation data of the anticipated state information, and the like. The monitoring system may further include the analysis circuit setting the alarm state when the alarm threshold level is exceeded for an alternate input channel in the first group of input channels, such as where the setting of the alarm state for the first input channel and the alternate input channel are determined to be a multiple-instance anomaly detection, wherein the second routing of input channels comprises the first input channel and a second input channel, wherein the sensor data from the first input channel and the second input channel contribute to simultaneous data analysis. The second routing of input channels may include a change in a routing collection parameter, such as where the routing collection parameter is an increase in sampling rate, an increase in the number of channels being sampled, a burst sampling of at least one of the plurality of input channels, and the like.

**[0979]** In embodiments, and referring to FIG. **138**, collector route templates **10510** may be utilized for smart route changes and may be implemented by a local data collection system **10512** for collection and monitoring of data collected through a plurality of input channels **10500**, such as data from sensors **10514**, IoT devices **10516**, and the like. The local collection system **10512**, also referred to herein as a data collector **10512**, may comprise a data storage **10502**, a data acquisition circuit **10504**, a data analysis circuit **10506**, a response circuit **10508**, and the like, wherein the monitoring facilities may be deployed locally on the data collector **10512**, in part locally on the data collector and in part on a remote information technology infrastructure component apart from the data collector, and the like.

**[0980]** In embodiments, a monitoring system for data collection in an industrial environment may comprise: a data collector communicatively coupled to a plurality of input channels; a data acquisition circuit structured to interpret a plurality of detection values, each of the plurality of detection values corresponding to at least one of the input channels, wherein the data acquisition circuit acquires sensor data from a first route of input channels for the plurality of input channels; a data storage structured to store sensor specifications for sensors that correspond to the input channels; a data analysis circuit structured to evaluate the sensor data with respect to stored anticipated state information, wherein the anticipated state information comprises an alarm threshold level, and wherein the data analysis circuit sets an alarm state when the alarm threshold level is exceeded for a first input channel in the first group of input

channels; and a response circuit structured to change the routing of the input channels for data collection from the first routing of input channels to an alternate routing of input channels, wherein the alternate routing of input channels comprise the first input channel and a group of input channels related to the first input channel. In embodiments, the system may be deployed locally on the data collector, deployed in part locally on the data collector and in part on a remote information technology infrastructure component apart from the collector, wherein each of the input channels correspond to a sensor located in the environment. The group of input channels may be related to the first input channel are at least in part taken from the plurality of input channels not included in the first routing of input channels. An alarm state may indicate a detection mode, such as where the detection mode is an operational mode detection comprising an out-of-range detection, the detection mode is a maintenance mode detection comprising an alarm detected during maintenance, the detection mode is a failure mode detection. The controller may communicate the failure mode detection facility, such as where the detection mode is a power mode detection and the alarm state is indicative of a power related limitation data of the anticipated state information, the detection mode is a performance mode detection and the alarm state is indicative of a high-performance limitation data of the anticipated state information, and the like. The analysis circuit may set the alarm state when the alarm threshold level is exceeded for an alternate input channel in the first group of input channels, such as where the setting of the alarm state for the first input channel and the alternate input channel are determined to be a multiple-instance anomaly detection, wherein the alternate routing of input channels comprises the first input channel and a second input channel, wherein the sensor data from the first input channel and the second input channel contribute to simultaneous data analysis. The alternate routing of input channels may include a change in a routing collection parameter, such as for an increase in sampling rate, an increase in the number of channels being sampled, a burst sampling of at least one of the plurality of input channels, and the like.

**[0981]** In embodiments, a computer-implemented method for implementing a monitoring system for data collection in an industrial environment may comprise: providing a data collector communicatively coupled to a plurality of input channels; providing a data acquisition circuit structured to interpret a plurality of detection values, each of the plurality of detection values corresponding to at least one of the input channels, wherein the data acquisition circuit acquires sensor data from a first route of input channels for the plurality of input channels; providing a data storage structured to store sensor specifications for sensors that correspond to the input channels; providing a data analysis circuit structured to evaluate the sensor data with respect to stored anticipated state information, wherein the anticipated state information comprises an alarm threshold level, and wherein the data analysis circuit sets an alarm state when the alarm threshold level is exceeded for a first input channel in the first group of input channels; and providing a response circuit structured to change the routing of the input channels for data collection from the first routing of input channels to an alternate routing of input channels, wherein the alternate routing of input channels comprise the first input channel and a group of input channels related to the first input channel. In embodiments, the system may be deployed locally on the data collector, deployed in part locally on the data collector and in part on a remote information technology infrastructure component apart from the collector, wherein each of the input channels correspond to a sensor located in the environment.

**[0982]** In embodiments, one or more non-transitory computer-readable media comprising computer executable instructions that, when executed, may cause at least one processor to perform actions may comprise: providing a data collector communicatively coupled to a plurality of input channels; providing a data acquisition circuit structured to interpret a plurality of detection values, each of the plurality of detection values corresponding to at least one of the input channels, wherein the data acquisition circuit acquires sensor data from a first route of input channels for the plurality of input channels; providing a data storage structured to store sensor specifications for sensors that correspond to the input channels; providing a data analysis circuit structured to evaluate the sensor data with respect to stored anticipated state information, wherein the anticipated state information comprises an alarm threshold level, and wherein the data analysis circuit sets an alarm state when the alarm threshold level is exceeded for a first input channel in the first group of input channels; and providing a response circuit structured to change the routing of the input channels for data collection from the first routing of input channels to an alternate routing of input channels, wherein the alternate routing of input channels comprise the first input channel and a group of input channels related to the first input channel. In embodiments, the instructions may be deployed locally on the data collector, deployed in part locally on the data collector and in part on a remote information technology infrastructure component apart from the collector, wherein each of the input channels correspond to a sensor located in the environment.

**[0983]** In embodiments, a monitoring system for data collection in an industrial environment may comprise: a data collector communicatively coupled to a plurality of input channels; a data acquisition circuit structured to interpret a plurality of detection values, each of the plurality of detection values corresponding to at least one of the input channels, wherein the data acquisition circuit acquires sensor data from a first route of input channels for the plurality of input channels; a data storage structured to store sensor specifications for sensors that correspond to the input channels; a data analysis circuit structured to evaluate the sensor data with respect to stored anticipated state information, wherein the anticipated state information comprises an alarm threshold level, and wherein the data analysis circuit sets an alarm state when the alarm threshold level is exceeded for a first input channel in the first group of input channels and transmits the alarm state across a network to a routing control facility; and a response circuit structured to change the routing of the input channels for data collection from the first routing of input channels to an alternate routing of input channels upon reception of a routing change indication from the routing control facility, wherein the alternate routing of input channels comprise the first input channel and a group of input channels related to the first input channel, wherein the data collector automatically executes the change in routing of the input channels if a communication parameter of the network between the data collector and the routing control facility is not met. In

embodiments, the instructions may be deployed locally on the data collector, deployed in part locally on the data collector and in part on a remote information technology infrastructure component apart from the collector, wherein each of the input channels correspond to a sensor located in the environment. The communication parameter may be a time-period parameter within which the routing control facility must respond. The communication parameter may be a network availability parameter, such as a network connection parameter or bandwidth requirement. The group of input channels related to the first input channel may be at least in part taken from the plurality of input channels not included in the first routing of input channels. The alarm state may indicate a detection mode, such as an operational mode detection comprising an out-of-range detection, a maintenance mode detection comprising an alarm detected during maintenance, and the like. The detection mode may be a failure mode detection, such as when the controller communicates the failure mode detection facility, the alarm state is indicative of a power related limitation data of the anticipated state information, the detection mode is a performance mode detection where the alarm state is indicative of a high-performance limitation data of the anticipated state information, and the like. The analysis circuit may set the alarm state when the alarm threshold level is exceeded for an alternate input channel in the first group of input channels, such as where the setting of the alarm state for the first input channel and the alternate input channel are determined to be a multiple-instance anomaly detection, wherein the alternate routing of input channels comprises the first input channel and a second input channel, wherein the sensor data from the first input channel and the second input channel contribute to simultaneous data analysis. The alternate routing of input channels may be a change in a routing collection parameter, such as an increase in sampling rate, is an increase in the number of channels being sampled, a burst sampling of at least one of the plurality of input channels, and the like.

**[0984]** In embodiments, a computer-implemented method for implementing a monitoring system for data collection in an industrial environment may comprise: providing a data collector communicatively coupled to a plurality of input channels; providing a data acquisition circuit structured to interpret a plurality of detection values, each of the plurality of detection values corresponding to at least one of the input channels, wherein the data acquisition circuit acquires sensor data from a first route of input channels for the plurality of input channels; providing a data storage structured to store sensor specifications for sensors that correspond to the input channels; providing a data analysis circuit structured to evaluate the sensor data with respect to stored anticipated state information, wherein the anticipated state information comprises an alarm threshold level, and wherein the data analysis circuit sets an alarm state when the alarm threshold level is exceeded for a first input channel in the first group of input channels and transmits the alarm state across a network to a routing control facility; and providing a response circuit structured to change the routing of the input channels for data collection from the first routing of input channels to an alternate routing of input channels upon reception of a routing change indication from the routing control facility, wherein the alternate routing of input channels comprise the first input channel and a group of input channels related to the first input channel, wherein the data collector automatically executes the change in routing of the input channels if a communication parameter of the network between the data collector and the routing control facility is not met. In embodiments, the instructions may be deployed locally on the data collector, deployed in part locally on the data collector and in part on a remote information technology infrastructure component apart from the collector, wherein each of the input channels correspond to a sensor located in the environment.

**[0985]** In embodiments, one or more non-transitory computer-readable media comprising computer executable instructions that, when executed, may cause at least one processor to perform actions comprising: providing a data collector communicatively coupled to a plurality of input channels; providing a data acquisition circuit structured to interpret a plurality of detection values, each of the plurality of detection values corresponding to at least one of the input channels, wherein the data acquisition circuit acquires sensor data from a first route of input channels for the plurality of input channels; providing a data storage structured to store sensor specifications for sensors that correspond to the input channels; providing a data analysis circuit structured to evaluate the sensor data with respect to stored anticipated state information, wherein the anticipated state information comprises an alarm threshold level, and wherein the data analysis circuit sets an alarm state when the alarm threshold level is exceeded for a first input channel in the first group of input channels and transmits the alarm state across a network to a routing control facility; and providing a response circuit structured to change the routing of the input channels for data collection from the first routing of input channels to an alternate routing of input channels upon reception of a routing change indication from the routing control facility, wherein the alternate routing of input channels comprise the first input channel and a group of input channels related to the first input channel, wherein the data collector automatically executes the change in routing of the input channels if a communication parameter of the network between the data collector and the routing control facility is not met. In embodiments, the instructions may be deployed locally on the data collector, deployed in part locally on the data collector and in part on a remote information technology infrastructure component apart from the collector, wherein each of the input channels correspond to a sensor located in the environment.

**[0986]** In embodiments, a monitoring system for data collection in an industrial environment may comprise: a first and second data collector communicatively coupled to a plurality of input channels; a data acquisition circuit structured to interpret a plurality of detection values, each of the plurality of detection values corresponding to at least one of the input channels, wherein the data acquisition circuit acquires sensor data from a first route of input channels for the plurality of input channels; a data storage structured to store sensor specifications for sensors that correspond to the input channels; a data analysis circuit structured to evaluate the sensor data with respect to stored anticipated state information, wherein the anticipated state information comprises an alarm threshold level, and wherein the data analysis circuit sets an alarm state when the alarm threshold level is exceeded for a first input channel in the first group of input channels; a communication circuit structured to communicate with a second data collector, wherein the second data collector transmits a state message related to a first input channel from the first route of input channels; and a response

circuit structured to change the routing of the input channels for data collection from the first routing of input channels to an alternate routing of input channels based on the state message from the second data collector, wherein the alternate routing of input channel comprise the first input channel and a group of input channels related to the first input sensor. In embodiments, the system may be deployed locally on the data collector, deployed in part locally on the data collector and in part on a remote information technology infrastructure component apart from the collector, wherein each of the input channels correspond to a sensor located in the environment. The set state message transmitted from the second data collector may be from a second input channel that is mounted in proximity to the first input channel. The set alarm transmitted from the second controller may be from a second input sensor that is part of a related group of input sensors comprising the first input sensor. The group of input channels related to the first input channel may be at least in part taken from the plurality of input channels not included in the first routing of input channels. The alarm state may indicate a detection mode, such as where the detection mode is an operational mode detection comprising an out-of-range detection, a maintenance mode detection comprising an alarm detected during maintenance, is a failure mode detection, and the like. The controller may communicate the failure mode detection facility, such as where the detection mode is a power mode detection and the alarm state is indicative of a power related limitation data of the anticipated state information, the detection mode is a performance mode detection where the alarm state is indicative of a high-performance limitation data of the anticipated state information, and the like. The analysis circuit may set the alarm state when the alarm threshold level is exceeded for an alternate input channel in the first group of input channels, such as where the setting of the alarm state for the first input channel and the alternate input channel are determined to be a multiple-instance anomaly detection, wherein the alternate routing of input channels comprises the first input channel and a second input channel, wherein the sensor data from the first input channel and the second input channel contribute to simultaneous data analysis. The alternate routing of input channels may be a change in a routing collection parameter, such as an increase in sampling rate, an increase in the number of channels being sampled, a burst sampling of at least one of the plurality of input channels, and the like.

**[0987]** In embodiments, a computer-implemented method for implementing a monitoring system for data collection in an industrial environment may comprise: providing a first and second data collector communicatively coupled to a plurality of input channels; providing a data acquisition circuit structured to interpret a plurality of detection values, each of the plurality of detection values corresponding to at least one of the input channels, wherein the data acquisition circuit acquires sensor data from a first route of input channels for the plurality of input channels; providing a data storage structured to store sensor specifications for sensors that correspond to the input channels; providing a data analysis circuit structured to evaluate the sensor data with respect to stored anticipated state information, wherein the anticipated state information comprises an alarm threshold level, and wherein the data analysis circuit sets an alarm state when the alarm threshold level is exceeded for a first input channel in the first group of input channels; providing a communication circuit structured to communicate with a second data collector, wherein the second data collector transmits a state message related to a first input channel from the first route of input channels, and providing a response circuit structured to change the routing of the input channels for data collection from the first routing of input channels to an alternate routing of input channels based on the state message from the second data collector, wherein the alternate routing of input channel comprise the first input channel and a group of input channels related to the first input sensor. In embodiments, the method may be deployed locally on the data collector, deployed in part locally on the data collector and in part on a remote information technology infrastructure component apart from the collector, wherein each of the input channels correspond to a sensor located in the environment.

**[0988]** In embodiments, one or more non-transitory computer-readable media comprising computer executable instructions that, when executed, may cause at least one processor to perform actions comprising: providing a first and second data collector communicatively coupled to a plurality of input channels; providing a data acquisition circuit structured to interpret a plurality of detection values, each of the plurality of detection values corresponding to at least one of the input channels, wherein the data acquisition circuit acquires sensor data from a first route of input channels for the plurality of input channels; providing a data storage structured to store sensor specifications for sensors that correspond to the input channels; providing a data analysis circuit structured to evaluate the sensor data with respect to stored anticipated state information, wherein the anticipated state information comprises an alarm threshold level, and wherein the data analysis circuit sets an alarm state when the alarm threshold level is exceeded for a first input channel in the first group of input channels; providing a communication circuit structured to communicate with a second data collector, wherein the second data collector transmits a state message related to a first input channel from the first route of input channels, and providing a response circuit structured to change the routing of the input channels for data collection from the first routing of input channels to an alternate routing of input channels based on the state message from the second data collector, wherein the alternate routing of input channel comprise the first input channel and a group of input channels related to the first input sensor. In embodiments, the instructions may be deployed locally on the data collector, deployed in part locally on the data collector and in part on a remote information technology infrastructure component apart from the collector, wherein each of the input channels correspond to a sensor located in the environment.

**[0989]** In embodiments, a monitoring system for data collection in an industrial environment may comprise: a data collector communicatively coupled to a plurality of input channels; a data acquisition circuit structured to interpret a plurality of detection values, each of the plurality of detection values corresponding to at least one of the input channel, wherein the data acquisition circuit acquires sensor data from a first group of input channels from the plurality of input channels; a data storage structured to store sensor specifications for sensors that correspond to the input channels; a data analysis circuit structured to evaluate the sensor data with respect to stored anticipated state information, wherein the anticipated state information comprises an alarm threshold level, and wherein the data analysis circuit

sets an alarm state when the alarm threshold level is exceeded for a first input channel in the first group of input channel; and a response circuit structured to change the input channels being collected from the first group of input channels to an alternative group of input channels, wherein the alternate group of input channels comprise the first input channel and a group of input channels related to the first input sensor. In embodiments, the system may be deployed locally on the data collector, deployed in part locally on the data collector and in part on a remote information technology infrastructure component apart from the collector, wherein each of the input channels correspond to a sensor located in the environment. The group of input sensors related to the first input sensor may be at least in part taken from the plurality of input sensors not included in the first group of input sensors. The first group of input channels related to the first input channel may be at least in part taken from the plurality of input channels not included in the first routing of input channels. The alarm state may indicate a detection mode, such as where the detection mode is an operational mode detection comprising an out-of-range detection, a maintenance mode detection comprising an alarm detected during maintenance. The detection mode may be a failure mode detection, such as where the controller communicates the failure mode detection facility. The detection mode may be a power mode detection where the alarm state is indicative of a power related limitation data of the anticipated state information. The detection mode may be a performance mode detection, where the alarm state is indicative of a high-performance limitation data of the anticipated state information. The analysis circuit may set the alarm state when the alarm threshold level is exceeded for an alternate input channel in the first group of input channels, such as when the setting of the alarm state for the first input channel and the alternate input channel are determined to be a multiple-instance anomaly detection, wherein the alternate routing of input channels comprises the first input channel and a second input channel, wherein the sensor data from the first input channel and the second input channel contribute to simultaneous data analysis. An alternative group of input channels may include a change in a routing collection parameter, such as where the routing collection parameter is an increase in sampling rate, an increase in the number of channels being sampled, a burst sampling of at least one of the plurality of input channels, and the like.

**[0990]** In embodiments, a computer-implemented method for implementing a monitoring system for data collection in an industrial environment may comprise: providing a data collector communicatively coupled to a plurality of input channels; providing a data acquisition circuit structured to interpret a plurality of detection values, each of the plurality of detection values corresponding to at least one of the input channel, wherein the data acquisition circuit acquires sensor data from a first group of input channels from the plurality of input channels; providing a data storage structured to store sensor specifications for sensors that correspond to the input channels; providing a data analysis circuit structured to evaluate the sensor data with respect to stored anticipated state information, wherein the anticipated state information comprises an alarm threshold level, and wherein the data analysis circuit sets an alarm state when the alarm threshold level is exceeded for a first input channel in the first group of input channel; and providing a response circuit structured to change the input channels being collected from the first group of input channels to an alternative group of input channels, wherein the alternate group of input channels comprise the first input channel and a group of input channels related to the first input sensor. In embodiments, the method may be deployed locally on the data collector, deployed in part locally on the data collector and in part on a remote information technology infrastructure component apart from the collector, wherein each of the input channels correspond to a sensor located in the environment.

**[0991]** In embodiments, one or more non-transitory computer-readable media comprising computer executable instructions that, when executed, may cause at least one processor to perform actions comprising: providing a data collector communicatively coupled to a plurality of input channels; providing a data acquisition circuit structured to interpret a plurality of detection values, each of the plurality of detection values corresponding to at least one of the input channel, wherein the data acquisition circuit acquires sensor data from a first group of input channels from the plurality of input channels; providing a data storage structured to store sensor specifications for sensors that correspond to the input channels; providing a data analysis circuit structured to evaluate the sensor data with respect to stored anticipated state information, wherein the anticipated state information comprises an alarm threshold level, and wherein the data analysis circuit sets an alarm state when the alarm threshold level is exceeded for a first input channel in the first group of input channel; and providing a response circuit structured to change the input channels being collected from the first group of input channels to an alternative group of input channels, wherein the alternate group of input channels comprise the first input channel and a group of input channels related to the first input sensor. In embodiments, the instructions may be deployed locally on the data collector, deployed in part locally on the data collector and in part on a remote information technology infrastructure component apart from the collector, wherein each of the input channels correspond to a sensor located in the environment.

**[0992]** In embodiments, a monitoring system for data collection in an industrial environment may comprise: a data collector communicatively coupled to a plurality of input channels; a data storage structured to store a plurality of collector route templates, sensor specifications for sensors that correspond to the input channels, wherein the plurality of collector route templates each comprise a different sensor collection routine; a data acquisition circuit structured to interpret a plurality of detection values, each of the plurality of detection values corresponding to at least one of the input channels, wherein the data acquisition circuit acquires sensor data from a first route of input channels; and a data analysis circuit structured to evaluate the sensor data with respect to stored anticipated state information, wherein the anticipated state information comprises an alarm threshold level, and wherein the data analysis circuit sets an alarm state when the alarm threshold level is exceeded for a first input channel in the first group of input channels, wherein the data collector is configured to switch from a current routing template collection routine to an alternate routing template collection routine based on a setting of an alarm state. In embodiments, the system may be deployed locally on the data collector, deployed in part locally on the data collector and in part on a remote information technology infrastructure component apart from the collector, wherein

each of the input channels correspond to a sensor located in the environment. The setting of the alarm state may be based on operational mode routing collection schemes, such as where the operational mode is at least one of a normal operational mode, a peak operational mode, an idle operational mode, a maintenance operational mode, and a power saving operational mode. The alarm threshold level may be associated with a sensed change to one of the plurality of input channels, such as where the sensed change is a failure condition, is a performance condition, a power condition, a temperature condition, a vibration condition, and the like. The alarm state may indicate a detection mode, such as where the detection mode is an operational mode detection comprising an out-of-range detection, a maintenance mode detection comprising an alarm detected during maintenance, and the like. The detection mode may be a power mode detection, where the alarm state is indicative of a power related limitation data of the anticipated state information. The detection mode may be a performance mode detection, where the alarm state is indicative of a high-performance limitation data of the anticipated state information. The analysis circuit may set the alarm state when the alarm threshold level is exceeded for an alternate input channel, such as wherein the setting of the alarm state is determined to be a multiple-instance anomaly detection. The alternate routing template may be a change to an input channel routing collection parameter. The routing collection parameter may be an increase in sampling rate, such as an increase in the number of channels being sampled, a burst sampling of at least one of the plurality of input channels, and the like.

**[0993]** In embodiments, a computer-implemented method for implementing a monitoring system for data collection in an industrial environment may comprise: providing a data collector communicatively coupled to a plurality of input channels; providing a data storage structured to store a plurality of collector route templates, sensor specifications for sensors that correspond to the input channels, wherein the plurality of collector route templates each comprise a different sensor collection routine; providing a data acquisition circuit structured to interpret a plurality of detection values, each of the plurality of detection values corresponding to at least one of the input channels, wherein the data acquisition circuit acquires sensor data from a first route of input channels; and providing a data analysis circuit structured to evaluate the sensor data with respect to stored anticipated state information, wherein the anticipated state information comprises an alarm threshold level, and wherein the data analysis circuit sets an alarm state when the alarm threshold level is exceeded for a first input channel in the first group of input channels, wherein the data collector is configured to switch from a current routing template collection routine to an alternate routing template collection routine based on a setting of an alarm state. In embodiments, the system may be deployed locally on the data collector, deployed in part locally on the data collector and in part on a remote information technology infrastructure component apart from the collector, wherein each of the input channels correspond to a sensor located in the environment.

**[0994]** In embodiments, one or more non-transitory computer-readable media comprising computer executable instructions that, when executed, may cause at least one processor to perform actions comprising: providing a data collector communicatively coupled to a plurality of input channels; providing a data storage structured to store a plurality of collector route templates, sensor specifications for sensors that correspond to the input channels, wherein the plurality of collector route templates each comprise a different sensor collection routine; providing a data acquisition circuit structured to interpret a plurality of detection values, each of the plurality of detection values corresponding to at least one of the input channels, wherein the data acquisition circuit acquires sensor data from a first route of input channels; and providing a data analysis circuit structured to evaluate the sensor data with respect to stored anticipated state information, wherein the anticipated state information comprises an alarm threshold level, and wherein the data analysis circuit sets an alarm state when the alarm threshold level is exceeded for a first input channel in the first group of input channels, wherein the data collector is configured to switch from a current routing template collection routine to an alternate routing template collection routine based on a setting of an alarm state. In embodiments, the instructions may be deployed locally on the data collector, deployed in part locally on the data collector and in part on a remote information technology infrastructure component apart from the collector, wherein each of the input channels correspond to a sensor located in the environment.

**[0995]** Methods and systems are disclosed herein for a system for data collection in an industrial environment using intelligent management of data collection bands, referred to herein in some cases as smart bands. Smart bands may facilitate intelligent, situational, context-aware collection of data, such as by a data collector (such as any of the wide range of data collector embodiments described throughout this disclosure). Intelligent management of data collection via smart bands may improve various parameters of data collection, as well as parameters of the processes, applications, and products that depend on data collection, such as data quality parameters, consistency parameters, efficiency parameters, comprehensiveness parameters, reliability parameters, effectiveness parameters, storage utilization parameters, yield parameters (including financial yield, output yield, and reduction of adverse events), energy consumption parameters, bandwidth utilization parameters, input/output speed parameters, redundancy parameters, security parameters, safety parameters, interference parameters, signal-to-noise parameters, statistical relevancy parameters, and others. Intelligent management of smart bands may optimize across one or more such parameters, such as based on a weighting of the value of the parameters; for example, a smart band may be managed to provide a given level of redundancy for critical data, while not exceeding a specified level of energy usage. This may include using a variety of optimization techniques described throughout this disclosure and the documents incorporated herein by reference.

**[0996]** In embodiments, such methods and systems for intelligent management of smart bands include an expert system and supporting technology components, services, processes, modules, applications and interfaces, for managing the smart bands (collectively referred to in some cases as a smart band platform **10722**), which may include a model-based expert system, a rule-based expert system, an expert system using artificial intelligence (such as a machine learning system, which may include a neural net expert system, a self-organizing map system, a human-supervised machine learning system, a state determination system, a classification system, or other artificial intelligence system), or vari-

ous hybrids or combinations of any of the above. References to an expert system should be understood to encompass utilization of any one of the foregoing or suitable combinations, except where context indicates otherwise. Intelligent management may be of data collection of various types of data (e.g., vibration data, noise data and other sensor data of the types described throughout this disclosure) for event detection, state detection, and the like. Intelligent management may include managing a plurality of smart bands each directed at supporting an identified application, process or workflow, such as confirming progress toward or alignment with one or more objectives, goals, rules, policies, or guidelines. Intelligent management may also involve managing data collection bands targeted to backing out an unknown variable based on collection of other data (such as based on a model of the behavior of a system that involves the variable), selecting preferred inputs among available inputs (including specifying combinations, fusions, or multiplexing of inputs), and/or specifying an input band among available input bands.

**[0997]** Data collection bands, or smart bands, may include any number of items such as sensors, input channels, data locations, data streams, data protocols, data extraction techniques, data transformation techniques, data loading techniques, data types, frequency of sampling, placement of sensors, static data points, metadata, fusion of data, multiplexing of data, and the like as described herein. Smart band settings, which may be used interchangeably with smart band and data collection band, may describe the configuration and makeup of the smart band, such as by specifying the parameters that define the smart band. For example, data collection bands, or smart bands, may include one or more frequencies to measure. Frequency data may further include at least one of a group of spectral peaks, a true-peak level, a crest factor derived from a time waveform, and an overall waveform derived from a vibration envelope, as well as other signal characteristics described throughout this disclosure. Smart bands may include sensors measuring or data regarding one or more wavelengths, one or more spectra, and/or one or more types of data from various sensors and metadata. Smart bands may include one or more sensors or types of sensors of a wide range of types, such as described throughout this disclosure and the documents incorporated by reference herein. Indeed, the sensors described herein may be used in any of the methods or systems described throughout this disclosure. For example, one sensor may be an accelerometer, such as one that measures voltage per G ("V/G") of acceleration (e.g., 100 mV/G, 500 mV/G, 1 V/G, 5 V/G, 10 V/G, and the like). In embodiments, the data collection band circuit may alter the makeup of the subset of the plurality of sensors used in a smart band based on optimizing the responsiveness of the sensor, such as for example choosing an accelerometer better suited for measuring acceleration of a low speed mixer versus one better suited for measuring acceleration of a high speed industrial centrifuge. Choosing may be done intelligently, such as for example with a proximity probe and multiple accelerometers disposed on a centrifuge where while at low speed, one accelerometer is used for measuring in the smart band and another is used at high speeds. Accelerometers come in various types, such as piezo-electric crystal, low frequency (e.g., 10 V/G), high speed compressors (10 MV/G), MEMS, and the like. In another example, one sensor may be a proximity probe which can be used for sleeve or tilt-pad bearings (e.g., oil bath), or a velocity probe. In yet another example, one sensor may be a solid-state relay (SSR) that is structured to automatically interface with a routed data collector (such as a mobile or portable data collector) to obtain or deliver data. In another example, a mobile or portable data collector may be routed to alter the makeup of the plurality of available sensors, such as by bringing an appropriate accelerometer to a point of sensing, such as on or near a component of a machine. In still another example, one sensor may be a triax probe (e.g., a 100 MV/G triax probe), that in embodiments is used for portable data collection. In some embodiments, of a triax probe, a vertical element on one axis of the probe may have a high frequency response while the ones mounted horizontally may influence the frequency response of the whole triax. In another example, one sensor may be a temperature sensor and may include a probe with a temperature sensor built inside, such as to obtain a bearing temperature. In still additional examples, sensors may be ultrasonic, microphone, touch, capacitive, vibration, acoustic, pressure, strain gauges, thermographic (e.g., camera), imaging (e.g., camera, laser, IR, structured light), a field detector, an EMF meter to measure an AC electromagnetic field, a gaussmeter, a motion detector, a chemical detector, a gas detector, a CBRNE detector, a vibration transducer, a magnetometer, positional, location-based, a velocity sensor, a displacement sensor, a tachometer, a flow sensor, a level sensor, a proximity sensor, a pH sensor, a hygrometer/moisture sensor, a densitometric sensor, an anemometer, a viscometer, or any analog industrial sensor and/or digital industrial sensor. In a further example, sensors may be directed at detecting or measuring ambient noise, such as a sound sensor or microphone, an ultrasound sensor, an acoustic wave sensor, and an optical vibration sensor (e.g., using a camera to see oscillations that produce noise). In still another example, one sensor may be a motion detector.

**[0998]** Data collection bands, or smart bands, may be of or may be configured to encompass one or more frequencies, wavelengths, or spectra for particular sensors, for particular groups of sensors, or for combined signals from multiple sensors (such as involving multiplexing or sensor fusion).

**[0999]** Data collection bands, or smart bands, may be of or may be configured to encompass one or more sensors or sensor data (including groups of sensors and combined signals) from one or more pieces of equipment/components, areas of an installation, disparate but interconnected areas of an installation (e.g., a machine assembly line and a boiler room used to power the line), or locations (e.g., a building in Cambridge and a building in Boston). Smart band settings, configurations, instructions, or specifications (collectively referred to herein using any one of those terms) may include where to place a sensor, how frequently to sample a data point or points, the granularity at which a sample is taken (e.g., a number of sampling points per fraction of a second), which sensor of a set of redundant sensors to sample, an average sampling protocol for redundant sensors, and any other aspect that would affect data acquisition.

**[1000]** Within the smart band platform **10722**, an expert system, which may comprise a neural net, a model-based system, a rule-based system, a machine learning data analysis circuit, and/or a hybrid of any of those, may begin iteration towards convergence on a smart band that is optimized for a particular goal or outcome, such as predicting and managing performance, health, or other character-

istics of a piece of equipment, a component, or a system of equipment or components. Based on continuous or periodic analysis of sensor data, as patterns/trends are identified, or outliers appear, or a group of sensor readings begin to change, etc., the expert system may modify its data collection bands intelligently. This may occur by triggering a rule that reflects a model or understanding of system behavior (e.g., recognizing a shift in operating mode that calls for different sensors as velocity of a shaft increases) or it may occur under control of a neural net (either in combination with a rule-based approach or on its own), where inputs are provided such that the neural net over time learns to select appropriate collection modes based on feedback as to successful outcomes (e.g., successful classification of the state of a system, successful prediction, successful operation relative to a metric, or the like). For example, when a new pressure reactor is installed in a chemical processing facility, data from the current data collection band may not accurately predict the state or metric of operation of the system, thus, the machine learning data analysis circuit may begin to iterate to determine if a new data collection band is better at predicting a state. Based on offset system data, such as from a library or other data structure, certain sensors, frequency bands or other smart band members may be used in the smart band initially and data may be collected to assess performance. As the neural net iterates, other sensors/frequency bands may be accessed to determine their relative weight in identifying performance metrics. Over time, a new frequency band may be identified (or a new collection of sensors, a new set of configurations for sensors, or the like) as a better gauge of performance in the system and the expert system may modify its data collection band based on this iteration. For example, perhaps a slightly different or older associated turbine agitator in a chemical reaction facility dampens one or more vibration frequencies while a different frequency is of higher amplitude and present during optimal performance than what was seen in the offset system. In this example, the smart band may be altered from what was suggested by the corresponding offset system to capture the higher amplitude frequency that is present in the current system.

**[1001]** The expert system, in embodiments involving a neural net or other machine learning system, may be seeded and may iterate, such as towards convergence on a smart band, based on feedback and operation parameters, such as described herein. Certain feedback may include utilization measures, efficiency measures (e.g., power or energy utilization, use of storage, use of bandwidth, use of input/output use of perishable materials, use of fuel, and/or financial efficiency), measures of success in prediction or anticipation of states (e.g., avoidance and mitigation of faults), productivity measures (e.g., workflow), yield measures, and profit measures. Certain parameters may include: storage parameters (e.g., data storage, fuel storage, storage of inventory and the like); network parameters (e.g., network bandwidth, input/output speeds, network utilization, network cost, network speed, network availability and the like); transmission parameters (e.g., quality of transmission of data, speed of transmission of data, error rates in transmission, cost of transmission and the like); security parameters (e.g., number and/or type of exposure events; vulnerability to attack, data loss, data breach, access parameters, and the like); location and positioning parameters (e.g., location of data collectors, location of workers, location of machines and equipment, location of inventory units, location of parts and materials, location of network access points, location of ingress and egress points, location of landing positions, location of sensor sets, location of network infrastructure, location of power sources and the like); input selection parameters, data combination parameters (e.g., for multiplexing, extraction, transformation, loading, and the like); power parameters; states (e.g., operating modes, availability states, environmental states, fault modes, maintenance modes, anticipated states); events; and equipment specifications. With respect to states, operating modes may include mobility modes (direction, speed, acceleration, and the like), type of mobility modes (e.g., rolling, flying, sliding, levitation, hovering, floating, and the like), performance modes (e.g., gears, rotational speeds, heat levels, assembly line speeds, voltage levels, frequency levels, and the like), output modes, fuel conversion modes, resource consumption modes, and financial performance modes (e.g., yield, profitability, and the like). Availability states may refer to anticipating conditions that could cause machine to go offline or require backup. Environmental states may refer to ambient temperature, ambient humidity/moisture, ambient pressure, ambient wind/fluid flow, presence of pollution or contaminants, presence of interfering elements (e.g., electrical noise, vibration), power availability, and power quality. Anticipated states may include: achieving or not achieving a desired goal, such as a specified/threshold output production rate, a specified/threshold generation rate, an operational efficiency/failure rate, a financial efficiency/profit goal, a power efficiency/resource utilization; an avoidance of a fault condition (e.g., overheating, slow performance, excessive speed, excessive motion, excessive vibration/oscillation, excessive acceleration, expansion/contraction, electrical failure, running out of stored power/fuel, overpressure, excessive radiation/melt down, fire, freezing, failure of fluid flow (e.g., stuck valves, frozen fluids); mechanical failures (e.g., broken component, worn component, faulty coupling, misalignment, asymmetries/deflection, damaged component (e.g., deflection, strain, stress, cracking], imbalances, collisions, jammed elements, and lost or slipping chain or belt); avoidance of a dangerous condition or catastrophic failure; and availability (online status).

**[1002]** The expert system may comprise or be seeded with a model that predicts an outcome or state given a set of data (which may comprise inputs from sensors, such as via a data collector, as well as other data, such as from system components, from external systems and from external data sources). For example, the model may be an operating model for an industrial environment, machine, or workflow. In another example, the model may be for anticipating states, for predicting fault and optimizing maintenance, for self-organizing storage (e.g., on devices, in data pools and/or in the cloud), for optimizing data transport (such as for optimizing network coding, network-condition-sensitive routing, and the like), for optimizing data marketplaces, and the like.

**[1003]** The iteration of the expert system may result in any number of downstream actions based on analysis of data from the smart band. In an embodiment, the expert system may determine that the system should either keep or modify operational parameters, equipment or a weighting of a neural net model given a desired goal, such as a specified/threshold output production rate, specified/threshold generation rate, an operational efficiency/failure rate, a financial efficiency/

profit goal, a power efficiency/resource utilization, an avoidance of a fault condition, an avoidance of a dangerous condition or catastrophic failure, and the like. In embodiments, the adjustments may be based on determining context of an industrial system, such as understanding a type of equipment, its purpose, its typical operating modes, the functional specifications for the equipment, the relationship of the equipment to other features of the environment (including any other systems that provide input to or take input from the equipment), the presence and role of operators (including humans and automated control systems), and ambient or environmental conditions. For example, in order to achieve a profit goal, a pipeline in a refinery may need to operate for a certain amount of time a day and/or at a certain flow rate. The expert system may be seeded with a model for operation of the pipeline in a manner that results in a specified profit goal, such as indicating a given flow rate of material through the pipeline based on the current market sale price for the material and the cost of getting the material into the pipeline. As it acquires data and iterates, the model will predict whether the profit goal will be achieved given the current data. Based on the results of the iteration of the expert system, a recommendation may be made (or a control instruction may be automatically provided) to operate the pipeline at a higher flow rate, to keep it operational for longer or the like. Further, as the system iterates, one or more additional sensors may be sampled in the model to determine if their addition to the smart band would improve predicting a state. In another embodiment, the expert system may determine that the system should either keep or modify operational parameters, equipment or a weighting of a neural net or other model given a constraint of operation (e.g., meeting a required endpoint (e.g., delivery date, amount, cost, coordination with another system), operating with a limited resource (e.g., power, fuel, battery), storage (e.g., data storage), bandwidth (e.g., local network, p2p, WAN, internet bandwidth, availability, or input/output capacity), authorization (e.g., role-based)), a warranty limitation, a manufacturer's guideline, a maintenance guideline). For example, a constraint of operating a boiler in a refinery is that the aeration of the boiler feedwater needs to be reduced in the cycle; therefore, the boiler must coordinate with the deaerator. In this example, the expert system is seeded with a model for operation of the boiler in coordination with the de-aerator that results in a specified overall performance. As sensor data from the system is acquired, the expert system may determine that an aspect of one or both of the boiler and aerator must be changed to continue to achieve the specific overall performance. In a further embodiment, the expert system may determine that the system should either keep or modify operational parameters, equipment or a weighting of a neural net model given an identified choke point. In still another embodiment, the expert system may determine that the system should either keep or modify operational parameters, equipment or a weighting of a neural net model given an off-nominal operation. For example, a reciprocating compressor in a refinery that delivers gases at high pressure may be measured as having an off-nominal operation by sensors that feed their data into an expert system (optionally including a neural net or other machine learning system). As the expert system iterates and receives the off-nominal data, it may predict that the refinery will not achieve a specified goal and will recommend an action, such as taking the reciprocating compressor offline for maintenance. In another embodiment, the expert system may determine that the system should collect more/fewer data points from one or more sensors. For example, an anchor agitator in a pharmaceutical processing plant may be programmed to agitate the contents of a tank until a certain level of viscosity (e.g., as measured in centipoise) is obtained. As the expert system collects data throughout the run indicating an increase in viscosity, the expert system may recommend collecting additional data points to confirm a predicted state in the face of the increased strain on the plant systems from the viscosity. In yet another embodiment, the expert system may determine that the system should change a data storage technique. In still another example, the expert system may determine that the system should change a data presentation mode or manner. In a further embodiment, the expert system may determine that the system should apply one or more filters (low pass, high pass, band pass, etc.) to collected data. In yet a further embodiment, the expert system may determine that the system should collect data from a new smart band/new set of sensors and/or begin measuring a new aspect that the neural net identified itself. For example, various measurements may be made of paddle-type agitator mixers operating in a pharmaceutical plant, such as mixing times, temperature, homogeneous substrate distribution, heat exchange with internal structures and the tank wall or oxygen transfer rate, mechanical stress, forces and torques on agitator vessels and internal structures, and the like. Various sensor data streams may be included in a smart band monitoring these various aspects of the paddle-type agitator mixer, such as a flow meter, a thermometer, and others. As the expert system iterates, perhaps having been seeded with minimal data from during the agitator's run, a new aspect of the operation may become apparent, such as the impact of pH on the state of the run. Thus, a new smart band will be identified by the expert system that includes sensor data from a pH meter. In yet still a further embodiment, the expert system may determine that the system should discontinue collection of data from a smart band, one or more sensors, or the like. In another embodiment, the expert system may determine that the system should initiate data collection from a new smart band, such as a new smart band identified by the neural net itself. In yet another embodiment, the expert system may determine that the system should adjust the weights/biases of a model used by the expert system. In still another embodiment, the expert system may determine that the system should remove/re-task under-utilized equipment. For example, a plurality of agitators working with a pump blasting liquid in a pharmaceutical processing plant may be monitored during operation of the plant by the expert system. Through iteration of the expert system seeded with data from a run of the plant with the agitators, the expert system may predict that a state will be achieved even if one or more agitators are taken out of service.

**[1004]** In embodiments, a monitoring system for data collection in an industrial environment may include a plurality of input sensors, such as any of those described herein, communicatively coupled to a data collector having a controller. The monitoring system may include a data collection band circuit structured to determine at least one subset of the plurality of sensors from which to process output data. The monitoring system may also include a machine learning data analysis circuit structured to receive output data from the at least one subset of the plurality of sensors and learn received output data patterns indicative of a state. In some embodi-

ments, the data collection band circuit may alter the at least one subset of the plurality of sensors, or an aspect thereof, based on one or more of the learned received output data patterns and the state. In certain embodiments, the machine learning data analysis circuit is seeded with a model that enables it to learn data patterns. The model may be a physical model, an operational model, a system model, and the like. In other embodiments, the machine learning data analysis circuit is structured for deep learning wherein input data is fed to the circuit with no or minimal seeding and the machine learning data analysis circuit learns based on output feedback. For example, a static mixer in a chemical processing plant producing polymers may be used to facilitate the polymerization reaction. The static mixer may employ turbulent or laminar flow in its operation. Minimal data, such as heat transfer, velocity of flow out of the mixer, Reynolds number or pressure drop, acquired during the operation of the static mixer may be fed into the expert system which may iterate towards a prediction based on initial feedback (e.g., viscosity of the polymer, color of the polymer, reactivity of the polymer).

**[1005]** There may be a balance of multiple goals/guidelines in the management of smart bands by the expert system. For example, a repair and maintenance organization (RMO) may have operating parameters designed for maintenance of a storage tank in a refinery, while the owner of the refinery may have particular operating parameters for the storage tank that are designed for meeting a production goal. These goals, in this example relating to a maintenance goal or a production output, may be tracked by a different data collection bands. For example, maintenance of a storage tank may be tracked by sensors including a vibration transducer and a strain gauge, while the production goal of a storage tank may be tracked by sensors including a temperature sensor and a flow meter. The expert system may (optionally using a neural net, machine learning system, deep learning system, or the like, which may occur under supervision by one or more supervisors (human or automated)) intelligently manage bands aligned with different goals and assign weights, parameter modifications, or recommendations based on a factor, such as a bias towards one goal or a compromise to allow better alignment with all goals being tracked, for example. Compromises among the goals delivered to the expert system may be based on one or more hierarchies or rules (relating to the authority, role, criticality, or the like) of the applicable goals. In embodiments, compromises among goals may be optimized using machine learning, such as a neural net, deep learning system, or other artificial intelligence system as described throughout this disclosure. In one illustrative example, in a chemical processing plant where a gas-powered agitator is operating, the expert system may manage multiple smart bands, such as one directed to detecting the operational status of the gas-powered agitator, one directed at identifying a probability of hitting a production goal, and one directed at determining if the operation of the gas-powered agitator is meeting a fuel efficiency goal. Each of these smart bands may be populated with different sensors or data from different sensors (e.g., a vibration transducer to indicate operational status, a flow meter to indicate production goal, and a fuel gauge to indicate a fuel efficiency) whose output data are indicative of an aspect of the particular goal. Where a single sensor or a set of sensors is helpful for more than one goal, overlapping smart bands (having some sensors in common and other sensors not in common) may take input from that sensor or set of sensors, as managed by the smart band platform **10722**. If there are constraints on data collection (such as due to power limitations, storage limitations, bandwidth limitations, input/output processing capabilities, or the like), a rule may indicate that one goal (e.g., a fuel utilization goal or a pollution reduction goal that is mandated by law or regulation) takes precedence, such that the data collection for the smart bands associated with that goal are maintained as others are paused or shut down. Management of prioritization of goals may be hierarchical or may occur by machine learning. The expert system may be seeded with models, or may not be seeded at all, in iterating towards a predicted state (i.e., meeting the goal) given the current data it has acquired. In this example, during operation of the gas-powered agitator, the plant owner may decide to bias the system towards fuel efficiency. All of the bands may still be monitored, but as the expert system iterates and predicts that the system will not meet or is not meeting a particular goal, and then offers recommended changes directed at increasing the chance of meeting the goal, the plant owner may structure the system with a bias towards fuel efficiency so that the recommended changes to parameters affecting fuel efficiency are made in favor of making other recommended changes.

**[1006]** In embodiments, the expert system may continue iterating in a deep-learning fashion to arrive at a single smart band, after being seeded with more than one smart band, that optimizes meeting more than one goal. For example, there may be multiple goals tracked for a thermic heating system in a chemical processing or a food processing plant, such as thermal efficiency and economic efficiency. Thermal efficiency for the thermic heating system may be expressed by comparing BTUs put in to the system, which can be obtained by knowing the amount of and quality of the fuel being used, and the BTUs out of the system, which is calculated using the flow out of the system and the temperature differential of materials in and out of the system. Economic efficiency of the thermic heating system may be expressed as the ratio between costs to run the system (including fuel, labor, materials, and services) and energy output from the system for a period of time. Data used to track thermal efficiency may include data from a flow meter, quality data point(s), and a thermometer, and data used to track economic efficiency may be an energy output from the system (e.g., kWh) and costs data. These data may be used in smart bands by the expert system to predict states, however, the expert system may iterate toward a smart band that is optimized to predict states related to both thermal and economic efficiency. The new smart band may include data used previously in the individual smart bands but may also use new data from different sensors or data sources. In embodiments, the expert system may be seeded with a plurality of smart bands and iterate to predict various states, but may also iterate towards reducing the number of smart bands needed to predict the same set of states.

**[1007]** Iteration of the expert system may be governed by rules, in some embodiments. For example, the expert system may be structured to collect data for seeding at a predetermined frequency. The expert system may be structured to iterate at least a number of times, such as when a new component/equipment/fuel source is added, when a sensor goes off-line, or as standard practice. For example, when a sensor measuring the rotation of a stirrer in a food process-

ing line goes off-line and the expert system begins acquiring data from a new sensor measuring the same data points, the expert system may be structured to iterate for a number of times before the state is utilized in or allowed to affect any downstream actions. The expert system may be structured to train off-line or train in situ/online. The expert system may be structured to include static and/or manually input data in its smart bands. For example, an expert system managing smart bands associated with a mixer in a food processing plant may be structured to iterate towards predicting a duration of mixing before the food being processed achieves a particular viscosity, wherein the smart band includes data regarding the speed of the mixer, temperature of its contents, viscometric measurements and the required endpoint for viscosity and temperature of the food. The expert system may be structured to include a minimum/maximum number of variables.

**[1008]** In embodiments, the expert system may be overruled. In embodiments, the expert system may revert to prior band settings, such as in the event the expert system fails, such as if a neural network fails in a neural net expert system, if uncertainty is too high in a model-based system, if the system is unable to resolve conflicting rules in rule-based system, or the system cannot converge on a solution in any of the foregoing. For example, sensor data on an irrigation system used by the expert system in a smart band may indicate a massive leak in the field, but visual inspection, such as by a drone, indicates no such leak. In this event, the expert system will revert to an original smart band for seeding the expert system. In another example, one or more point sensors on an industrial pressure cooker indicates imminent failure in a seal, but the data collection band that the expert system converged to with a weighting towards a performance metric did not identify the failure. In this event, the smart band will revert to an original setting or a version of the smart band that would have also identified the imminent failure of the pressure cooker seal. In embodiments, the expert system may change smart band settings in the event that a new component is added that makes the system closer to a different offset system. For example, a vacuum distillation unit is added to an oil & gas refinery to distill naphthalene, but the current smart band settings for the expert system are derived from a refinery that distills kerosene. In this example, a data structure with smart band settings for various offset systems may be searched for a system that is more closely matched to the current system. When a new offset system is identified as more closely matched, such as one that also distill naphthalene, the new smart band settings (e.g., which sensors to use, where to place them, how frequently to sample, what static data points are needed, etc. as described herein) are used to seed the expert system to iterate towards predicting a state for the system. In embodiments, the expert system may change smart band settings in the event that a new set of offset data is available from a third-party library. For example, a pharmaceutical processing plant may have optimized a catalytic reactor to operate in a highly efficient way and deposited the smart band settings in a data structure. The data structure may be continuously scanned for new smart bands that better aid in monitoring catalytic reactions and thus, result in optimizing the operation of the reactor.

**[1009]** In embodiments, the expert system may be used to uncover unknown variables. For example, the expert system may iterate to identify a missing variable to be used for further iterations, such as further neural net iterations. For example, an under-utilized tank in a legacy condensate/make-up water system of a power station may have an unknown capacity because it is inaccessible and no documentation exists on the tank. Various aspects of the tank may be measured by a swarm of sensors to arrive at an estimated volume (e.g., flow into a downstream space, duration of a dye traced solution to work through the system), then that volume can be fed into the neural net as a new variable in the smart band.

**[1010]** In embodiments, the location of expert system node locations may be on a machine, on a data collector (or a group of them), in a network infrastructure (enterprise or other), or in the cloud. In embodiments, there may be distributed neurons across nodes (e.g., machine, data collector, network, cloud).

**[1011]** In an aspect, a monitoring system **10700** for data collection in an industrial environment, comprising a plurality of input sensors **10702** communicatively coupled to a data collector **10704** having a controller **10706**, a data collection band circuit **10708** structured to determine at least one collection parameter for at least one of the plurality of sensors **10702** from which to process output data **10710**, and a machine learning data analysis circuit **10712** structured to receive output data **10710** from the at least one of the plurality of sensors **10702** and learn received output data patterns **10718** indicative of a state. The data collection band circuit **10708** alters the at least one collection parameter for the at least one of the plurality of sensors **10702** based on one or more of the learned received output data patterns **10718** and the state. The state may correspond to an outcome relating to a machine in the environment, an anticipated outcome relating to a machine in the environment, an outcome relating to a process in the environment, an anticipated outcome relating to a process in the environment, and the like. The collection parameter may be a bandwidth parameter, may be used to govern the multiplexing of a plurality of the input sensors, may be a timing parameter, may relate to a frequency range, may relate to the granularity of collection of sensor data, is a storage parameter for the collected data. The machine learning data analysis circuit may be structured to learn received output data patterns **10718** by being seeded with a model **10720**, which may be a physical model, an operational model, or a system model. The machine learning data analysis circuit may be structured to learn received output data patterns **10718** based on the state. The data collection band circuit may alter the subset of the plurality of sensors when the learned received output data pattern does not reliably predict the state, which may include discontinuing collection of data from the at least one subset.

**[1012]** The monitoring system **10700** may keep or modify operational parameters of an item of equipment in the environment based on the determined state. The controller **10706** may adjust the weighting of the machine learning data analysis circuit **10712** based on the learned received output data patterns **10718** or the state. The controller **10706** may collect more/fewer data points from one or more members of the at least one subset of plurality of sensors **10702** based on the learned received output data patterns **10718** or the state. The controller **10706** may change a data storage technique for the output data **10710** based on the learned received output data patterns **10718** or the state. The controller **10706** may change a data presentation mode or

manner based on the learned received output data patterns **10718** or the state. The controller **10706** may apply one or more filters to the output data **10710**. The controller **10706** may identify a new data collection band circuit **10708** based on one or more of the learned received output data patterns **10718** and the state. The controller **10706** may adjust the weights/biases of the machine learning data analysis circuit **10712**, such as in response to the learned received output data patterns **10718**, in response to the accuracy of the prediction of an anticipated state by the machine learning data analysis circuit, in response to the accuracy of a classification of a state by the machine learning data analysis circuit, and the like. The monitoring device **10700** may remove or re-task under-utilized equipment based on one or more of the learned received output data patterns **10718** and the state. The machine learning data analysis circuit **10712** may include a neural network expert system. At least one subset of the plurality of sensors measures vibration and noise data. The machine learning data analysis circuit **10712** may be structured to learn received output data patterns **10718** indicative of progress/alignment with one or more goals/guidelines, wherein progress/alignment of each goal/guideline may be determined by a different subset of the plurality of sensors. The machine learning data analysis circuit **10712** may be structured to learn received output data patterns **10718** indicative of an unknown variable. The machine learning data analysis circuit **10712** may be structured to learn received output data patterns **10718** indicative of a preferred input among available inputs. The machine learning data analysis circuit **10712** may be structured to learn received output data patterns **10718** indicative of a preferred input data collection band among available input data collection bands. The machine learning data analysis circuit **10712** may be disposed in part on a machine, on one or more data collectors, in network infrastructure, in the cloud, or any combination thereof.

**[1013]** In embodiments, a monitoring device for data collection in an industrial environment may include a plurality of input sensors **10702** communicatively coupled to a controller **10706**, the controller **10706** including a data collection band circuit **10708** structured to determine at least one subset of the plurality of sensors **10702** from which to process output data **10710**; and a machine learning data analysis circuit **10712** structured to receive output data from the at least one subset of the plurality of sensors **10702** and learn received output data patterns **10718** indicative of a state, wherein the data collection band circuit **10708** alters an aspect of the at least one subset of the plurality of sensors **10702** based on one or more of the learned received output data patterns **10718** and the state. The aspect that the data collection band circuit **10708** alters is a number or a frequency of data points collected from one or more members of the at least one subset of plurality of sensors **10702**. The aspect that the data collection band circuit **10708** alters is a bandwidth parameter, a timing parameter, a frequency range, a granularity of collection of sensor data, a storage parameter for the collected data, and the like.

**[1014]** In an embodiment, a monitoring system **10700** for data collection in an industrial environment may include a plurality of input sensors **10702** communicatively coupled to a data collector **10704** having a controller **10706**, a data collection band circuit **10708** structured to determine at least one collection parameter for at least one of the plurality of sensors **10702** from which to process output data **10710**, and a machine learning data analysis circuit **10712** structured to receive output data **10710** from the at least one of the plurality of sensors **10702** and learn received output data patterns indicative of a state, wherein the data collection band circuit **10708** alters the at least one collection parameter for the at least one of the plurality of sensors **10702** based on one or more of the learned received output data patterns **10718** and the state, and wherein the data collection band circuit **10708** alters the at least one of the plurality of sensors **10702** when the learned received output data pattern **10718** does not reliably predict the state.

**[1015]** In an embodiment, a monitoring system **10700** for data collection in an industrial environment may include a plurality of input sensors **10702** communicatively coupled to a data collector **10704** having a controller **10706**, a data collection band circuit **10708** structured to determine at least one collection parameter for at least one of the plurality of sensors **10702** from which to process output data **10710**, and a machine learning data analysis circuit **10712** structured to receive output data **10710** from the at least one of the plurality of sensors **10702** and learn received output data patterns **10718** indicative of a state, wherein the data collection band circuit **10708** alters the at least one collection parameter for the at least one of the plurality of sensors **10702** based on one or more of the learned received output data patterns **10718** and the state, and wherein the data collector **10704** collects more or fewer data points from the at least one of the plurality of sensors **10702** based on the learned received output data patterns **10718** or the state.

**[1016]** In an embodiment, a monitoring system **10700** for data collection in an industrial environment may include a plurality of input sensors **10702** communicatively coupled to a data collector **10704** having a controller **10706**, a data collection band circuit **10708** structured to determine at least one collection parameter for at least one of the plurality of sensors **10702** from which to process output data **10710**, and a machine learning data analysis circuit **10712** structured to receive output data **10710** from the at least one of the plurality of sensors **10702** and learn received output data **10710** patterns indicative of a state, wherein the data collection band circuit **10708** alters the at least one collection parameter for the at least one of the plurality of sensors **10702** based on one or more of the learned received output data patterns **10718** and the state, and wherein the controller **10706** changes a data storage technique for the output data **10710** based on the learned received output data patterns **10718** or the state.

**[1017]** In an embodiment, a monitoring system **10700** for data collection in an industrial environment may include a plurality of input sensors **10702** communicatively coupled to a data collector **10704** having a controller **10706**, a data collection band circuit **10708** structured to determine at least one collection parameter for at least one of the plurality of sensors **10702** from which to process output data **10710**, and a machine learning data analysis circuit **10712** structured to receive output data **10710** from the at least one of the plurality of sensors **10702** and learn received output data patterns **10718** indicative of a state, wherein the data collection band circuit **10708** alters the at least one collection parameter for the at least one of the plurality of sensors **10702** based on one or more of the learned received output data patterns **10718** and the state, and wherein the controller **10706** changes a data presentation mode or manner based on the learned received output data patterns **10718** or the state.

**[1018]** In an embodiment, a monitoring system **10700** for data collection in an industrial environment may include a plurality of input sensors **10702** communicatively coupled to a data collector **10704** having a controller **10706**, a data collection band circuit **10708** structured to determine at least one collection parameter for at least one of the plurality of sensors **10702** from which to process output data **10710**, and a machine learning data analysis circuit **10712** structured to receive output data **10710** from the at least one of the plurality of sensors **10702** and learn received output data patterns **10718** indicative of a state, wherein the data collection band circuit **10708** alters the at least one collection parameter for the at least one of the plurality of sensors **10702** based on one or more of the learned received output data patterns **10718** and the state, and wherein the controller **10706** identifies a new data collection band circuit **10708** based on one or more of the learned received output data patterns **10718** and the state.

**[1019]** In an embodiment, a monitoring system **10700** for data collection in an industrial environment may include a plurality of input sensors **10702** communicatively coupled to a data collector **10704** having a controller **10706**, a data collection band circuit **10708** structured to determine at least one collection parameter for at least one of the plurality of sensors **10702** from which to process output data **10710**, and a machine learning data analysis circuit **10712** structured to receive output data **10710** from the at least one of the plurality of sensors **10702** and learn received output data patterns **10718** indicative of a state, wherein the data collection band circuit **10708** alters the at least one collection parameter for the at least one of the plurality of sensors **10702** based on one or more of the learned received output data patterns **10718** and the state, and wherein the controller **10706** adjusts the weights/biases of the machine learning data analysis circuit **10712**. The adjustment may be in response to the learned received output data patterns, in response to the accuracy of the prediction of an anticipated state by the machine learning data analysis circuit, in response to the accuracy of a classification of a state by the machine learning data analysis circuit, and the like.

**[1020]** In an embodiment, a monitoring system **10700** for data collection in an industrial environment may include a plurality of input sensors **10702** communicatively coupled to a data collector **10704** having a controller **10706**, a data collection band circuit **10708** structured to determine at least one collection parameter for at least one of the plurality of sensors **10702** from which to process output data **10710**, and a machine learning data analysis circuit **10712**. This machine learning data analysis circuit is structured to receive output data **10710** from the at least one of the plurality of sensors **10702** and learn received output data patterns **10718** indicative of a state, wherein the data collection band circuit **10708** alters the at least one collection parameter for the at least one of the plurality of sensors **10702** based on one or more of the learned received output data patterns **10718** and the state, and wherein the machine learning data analysis circuit **10712** is structured to learn received output data patterns **10718** indicative of progress or alignment with one or more goals or guidelines.

Clause 1. In embodiments, a monitoring system for data collection in an industrial environment, comprising: a plurality of input sensors communicatively coupled to a data collector having a controller; a data collection band circuit structured to determine at least one collection parameter for at least one of the plurality of sensors from which to process output data; and a machine learning data analysis circuit structured to receive output data from the at least one of the plurality of sensors and learn received output data patterns indicative of a state, wherein the data collection band circuit alters the at least one collection parameter for the at least one of the plurality of sensors based on one or more of the learned received output data patterns and the state. 2. The system of clause 1, wherein the state corresponds to an outcome relating to a machine in the environment. 3. The system of clause 1, wherein the state corresponds to an anticipated outcome relating to a machine in the environment. 4. The system of clause 1, wherein the state corresponds to an outcome relating to a process in the environment. 5. The system of clause 1, wherein the state corresponds to an anticipated outcome relating to a process in the environment. 6. The system of clause 1, wherein the collection parameter is a bandwidth parameter. 7. The system of clause 1, wherein the collection parameter is used to govern the multiplexing of a plurality of the input sensors. 8. The system of clause 1, wherein the collection parameter is a timing parameter. 9. The system of clause 1, wherein the collection parameter relates to a frequency range. 10. The system of clause 1, wherein the collection parameter relates to the granularity of collection of sensor data. 11. The system of clause 1, wherein the collection parameter is a storage parameter for the collected data. 12. The system of clause 1, wherein the machine learning data analysis circuit is structured to learn received output data patterns by being seeded with a model. 13. The system of clause 12, wherein the model is a physical model, an operational model, or a system model. 14. The system of clause 1, wherein the machine learning data analysis circuit is structured to learn received output data patterns based on the state. 15. The system of clause 1, wherein the data collection band circuit alters the subset of the plurality of sensors when the learned received output data pattern does not reliably predict the state. 16. The system of clause 15, wherein altering at least one subset comprises discontinuing collection of data from the at least one subset. 17. The system of clause 1, wherein the monitoring system keeps or modifies operational parameters of an item of equipment in the environment based on the determined state. 18. The system of clause 1, wherein the controller adjusts the weighting of the machine learning data analysis circuit based on the learned received output data patterns or the state. 19. The system of clause 1, wherein the controller collects more or fewer data points from one or more members of the at least one subset of plurality of sensors based on the learned received output data patterns or the state. 20. The system of clause 1, wherein the controller changes a data storage technique for the output data based on the learned received output data patterns or the state. 21. The system of clause 1, wherein the controller changes a data presentation mode or manner based on the learned received output data patterns or the state. 22. The system of clause 1, wherein the controller applies one or more filters to the output data. 23. The system of clause 1, wherein the controller identifies a new data collection band circuit based on one or more of the learned received output data patterns and the state. 24. The system of clause 1, wherein the controller adjusts the weights/biases of the machine learning data analysis circuit. 25. The system of clause 24, wherein the adjustment is in response to the learned received output data patterns. 26. The system of clause 24, wherein the adjust-

ment is in response to the accuracy of the prediction of an anticipated state by the machine learning data analysis circuit. 27. The system of clause 24, wherein the adjustment is in response to the accuracy of a classification of a state by the machine learning data analysis circuit. 28. The system of clause 1, wherein the monitoring device removes/re-tasks under-utilized equipment based on one or more of the learned received output data patterns and the state. 29. The system of clause 1, wherein the machine learning data analysis circuit comprises a neural network expert system. 30. The system of clause 1, wherein the at least one subset of the plurality of sensors measure vibration and noise data. 31. The system of clause 1, wherein the machine learning data analysis circuit is structured to learn received output data patterns indicative of progress/alignment with one or more goals/guidelines. 32. The system of clause 31, wherein progress/alignment of each goal/guideline is determined by a different subset of the plurality of sensors. 33. The system of clause 1, wherein the machine learning data analysis circuit is structured to learn received output data patterns indicative of an unknown variable. 34. The system of clause 1, wherein the machine learning data analysis circuit is structured to learn received output data patterns indicative of a preferred input among available inputs. 35. The system of clause 1, wherein the machine learning data analysis circuit is structured to learn received output data patterns indicative of a preferred input data collection band among available input data collection bands. 36. The system of clause 1, wherein the machine learning data analysis circuit is disposed in part on a machine, on one or more data collectors, in network infrastructure, in the cloud, or any combination thereof. 37. A monitoring device for data collection in an industrial environment, comprising: a plurality of input sensors communicatively coupled to a controller, the controller comprising: a data collection band circuit structured to determine at least one subset of the plurality of sensors from which to process output data; and a machine learning data analysis circuit structured to receive output data from the at least one subset of the plurality of sensors and learn received output data patterns indicative of a state, wherein the data collection band circuit alters an aspect of the at least one subset of the plurality of sensors based on one or more of the learned received output data patterns and the state. 38. The system of clause 37, wherein the aspect that the data collection band circuit alters is a number of data points collected from one or more members of the at least one subset of plurality of sensors. 39. The system of clause 37, wherein the aspect that the data collection band circuit alters is a frequency of data points collected from one or more members of the at least one subset of plurality of sensors. 40. The system of clause 37, wherein the aspect that the data collection band circuit alters is a bandwidth parameter. 41. The system of clause 37, wherein the aspect that the data collection band circuit alters is a timing parameter. 42. The system of clause 37, wherein the aspect that the data collection band circuit alters relates to a frequency range. 43. The system of clause 37, wherein the aspect that the data collection band circuit alters relates to the granularity of collection of sensor data. 44. The system of clause 37, wherein the collection parameter is a storage parameter for the collected data. 45. A monitoring system for data collection in an industrial environment, comprising: a plurality of input sensors communicatively coupled to a data collector having a controller; a data collection band circuit structured to determine at least one collection parameter for at least one of the plurality of sensors from which to process output data; and a machine learning data analysis circuit structured to receive output data from the at least one of the plurality of sensors and learn received output data patterns indicative of a state, wherein the data collection band circuit alters the at least one collection parameter for the at least one of the plurality of sensors based on one or more of the learned received output data patterns and the state, and wherein the data collection band circuit alters the at least one of the plurality of sensors when the learned received output data pattern does not reliably predict the state. 46. A monitoring system for data collection in an industrial environment, comprising: a plurality of input sensors communicatively coupled to a data collector having a controller; a data collection band circuit structured to determine at least one collection parameter for at least one of the plurality of sensors from which to process output data; and a machine learning data analysis circuit structured to receive output data from the at least one of the plurality of sensors and learn received output data patterns indicative of a state, wherein the data collection band circuit alters the at least one collection parameter for the at least one of the plurality of sensors based on one or more of the learned received output data patterns and the state, and wherein the data collector collects more or fewer data points from the at least one of the plurality of sensors based on the learned received output data patterns or the state. 47. A monitoring system for data collection in an industrial environment, comprising: a plurality of input sensors communicatively coupled to a data collector having a controller; a data collection band circuit structured to determine at least one collection parameter for at least one of the plurality of sensors from which to process output data; and a machine learning data analysis circuit structured to receive output data from the at least one of the plurality of sensors and learn received output data patterns indicative of a state, wherein the data collection band circuit alters the at least one collection parameter for the at least one of the plurality of sensors based on one or more of the learned received output data patterns and the state, and wherein the controller changes a data storage technique for the output data based on the learned received output data patterns or the state. 48. A monitoring system for data collection in an industrial environment, comprising: a plurality of input sensors communicatively coupled to a data collector having a controller; a data collection band circuit structured to determine at least one collection parameter for at least one of the plurality of sensors from which to process output data; and a machine learning data analysis circuit structured to receive output data from the at least one of the plurality of sensors and learn received output data patterns indicative of a state, wherein the data collection band circuit alters the at least one collection parameter for the at least one of the plurality of sensors based on one or more of the learned received output data patterns and the state, and wherein the controller changes a data presentation mode or manner based on the learned received output data patterns or the state. 49. A monitoring system for data collection in an industrial environment, comprising: a plurality of input sensors communicatively coupled to a data collector having a controller; a data collection band circuit structured to determine at least one collection parameter for at least one of the plurality of sensors from which to process output data; and a machine learning data analysis circuit structured to

receive output data from the at least one of the plurality of sensors and learn received output data patterns indicative of a state, wherein the data collection band circuit alters the at least one collection parameter for the at least one of the plurality of sensors based on one or more of the learned received output data patterns and the state, and wherein the controller identifies a new data collection band circuit based on one or more of the learned received output data patterns and the state. 50. A monitoring system for data collection in an industrial environment, comprising: a plurality of input sensors communicatively coupled to a data collector having a controller; a data collection band circuit structured to determine at least one collection parameter for at least one of the plurality of sensors from which to process output data; and a machine learning data analysis circuit structured to receive output data from the at least one of the plurality of sensors and learn received output data patterns indicative of a state, wherein the data collection band circuit alters the at least one collection parameter for the at least one of the plurality of sensors based on one or more of the learned received output data patterns and the state, and wherein the controller adjusts the weights/biases of the machine learning data analysis circuit. 51. The system of clause 50, wherein the adjustment is in response to the learned received output data patterns. 52. The system of clause 50, wherein the adjustment is in response to the accuracy of the prediction of an anticipated state by the machine learning data analysis circuit. 53. The system of clause 50, wherein the adjustment is in response to the accuracy of a classification of a state by the machine learning data analysis circuit. 54. A monitoring system for data collection in an industrial environment, comprising: a plurality of input sensors communicatively coupled to a data collector having a controller; a data collection band circuit structured to determine at least one collection parameter for at least one of the plurality of sensors from which to process output data; and a machine learning data analysis circuit structured to receive output data from the at least one of the plurality of sensors and learn received output data patterns indicative of a state, wherein the data collection band circuit alters the at least one collection parameter for the at least one of the plurality of sensors based on one or more of the learned received output data patterns and the state, and wherein the machine learning data analysis circuit is structured to learn received output data patterns indicative of progress or alignment with one or more goals or guidelines.

**[1021]** As described elsewhere herein, an expert system in an industrial environment may use sensor data to make predictions about outcomes or states of the environment or items in the environment. Data collection may be of various types of data (e.g., vibration data, noise data and other sensor data of the types described throughout this disclosure) for event detection, state detection, and the like. For example, the expert system may utilize ambient noise, or the overall sound environment of the area and/or overall vibration of the device of interest, optionally in conjunction with other sensor data, in detecting or predicting events or states. For example, a reciprocating compressor in a refinery, which may generate its own vibration, may also have an ambient vibration through contact with other aspects of the system.

**[1022]** In embodiments, all three types of noise (ambient noise, local noise and vibration noise) including various subsets thereof and combinations with other types of data, may be organized into large data sets, along with measured results, that are processed by a "deep learning" machine/expert system that learns to predict one or more states (e.g., maintenance, failure, or operational) or overall outcomes, such as by learning from human supervision or from other feedback, such as feedback from one or more of the systems described throughout this disclosure and the documents incorporated by reference herein.

**[1023]** Throughout this disclosure, various examples will involve machines, components, equipment, assemblies, and the like, and it should be understood that the disclosure could apply to any of the aforementioned. Elements of these machines operating in an industrial environment (e.g., rotating elements, reciprocating elements, swinging elements, flexing elements, flowing elements, suspending elements, floating elements, bouncing elements, bearing elements, etc.) may generate vibrations that may be of a specific frequency and/or amplitude typical of the element when the element is in a given operating condition or state (e.g., a normal mode of operation of a machine at a given speed, in a given gear, or the like). Changes in a parameter of the vibration may be indicative or predictive of a state or outcome of the machine. Various sensors may be useful in measuring vibration, such as accelerometers, velocity transducers, imaging sensors, acoustic sensors, and displacement probes, which may collectively be known as vibration sensors. Vibration sensors may be mounted to the machine, such as permanently or temporarily (e.g., adhesive, hook-and-loop, or magnetic attachment), or may be disposed on a mobile or portable data collector. Sensed conditions may be compared to historical data to identify or predict a state, condition or outcome. Typical faults that can be identified using vibration analysis include: machine out of balance, machine out of alignment, resonance, bent shafts, gear mesh disturbances, blade pass disturbances, vane pass disturbances, recirculation & cavitation, motor faults (rotor & stator), bearing failures, mechanical looseness, critical machine speeds, and the like, as well as excessive friction, clutch slipping, belt problems, suspension and shock absorption problems, valve and other fluid leaks, under-pressure states in lubrication and other fluid systems, overheating (such as due to many of the above), blockage or freezing of engagement of mechanical systems, interference effects, and other faults described throughout this disclosure and in the documents incorporated by reference.

**[1024]** Given that machines are frequently found adjacent to or working in concert with other machinery, measuring the vibration of the machine may be complicated by the presence of various noise components in the environment or associated vibrations that the machine may be subjected to. Indeed, the ambient and/or local environment may have its own vibration and/or noise pattern that may be known. In embodiments, the combination of vibration data with ambient and/or local noise or other ambient sensed conditions may form its own pattern, as will be further described herein.

**[1025]** In embodiments, measuring vibration noise may involve one or more vibration sensors on or in a machine to measure vibration noise of the machine that occurs continuously or periodically. Analysis of the vibration noise may be performed, such as filtering, signal conditioning, spectral analysis, trend analysis, and the like. Analysis may be performed on aggregate or individual sensor measurements to isolate vibration noise of equipment to obtain a characteristic vibration, vibration pattern or "vibration fingerprint" of the machine. The vibration fingerprints may be stored in

a data structure, or library, of vibration fingerprints. The vibration fingerprints may include frequencies, spectra (i.e., frequency vs. amplitude), velocities, peak locations, wave peak shapes, waveform shapes, wave envelope shapes, accelerations, phase information, phase shifts (including complex phase measurements) and the like. Vibration fingerprints may be stored in the library in association with a parameter by which it may be searched or sorted. The parameters may include a brand or type of machine/component/equipment, location of sensor(s) attachment or placement, duty cycle of the equipment/machine, load sharing of the equipment/machine, dynamic interactions with other devices, RPM, flow rate, pressure, other vibration driving characteristic, voltage of line power, age of equipment, time of operation, known neighboring equipment, associated auxiliary equipment/components, size of space equipment is in, material of platform for equipment, heat flux, magnetic fields, electrical fields, currents, voltage, capacitance, inductance, aspect of a product, and combinations (e.g., simple ratios) of the same. Vibration fingerprints may be obtained for machines under normal operation or for other periods of operation (e.g., off-nominal operation, malfunction, maintenance needed, faulty component, incorrect parameters of operation, other conditions, etc.) and can be stored in the library for comparison to current data. The library of vibration fingerprints may be stored as indicators with associated predictions, states, outcomes and/or events. Trend analysis data of measured vibration fingerprints can indicate time between maintenance events/failure events.

**[1026]** In embodiments, vibration noise may be used by the expert system to confirm the status of a machine, such as a favorable operation, a production rate, a generation rate, an operational efficiency, a financial efficiency (e.g., output per cost), a power efficiency, and the like. In embodiments, the expert system may make a comparison of the vibration noise with a stored vibration fingerprint. In other embodiments, the expert system may be seeded with vibration noise and initial feedback on states and outcomes in order to learn to predict other states and outcomes. For example, a center pivot irrigation system may be remotely monitored by attached vibration sensors to provide a measured vibration noise that can be compared to a library of vibration fingerprints to confirm that the system is operating normally. If the system is not operating normally, the expert system may automatically dispatch a field crew or drone to investigate. In another example of a vacuum distillation unit in a refinery, the vibration noise may be compared, such as by the expert system, to stored vibration fingerprints in a library to confirm a production rate of diesel. In a further example, the expert system may be seeded with vibration noise for a pipeline under conditions of a normal production rate and as the expert system iterates with current data (e.g., altered vibration noise, and possibly other altered parameters), it may predict that the production rate has increased as caused by the alterations. Measurements may be continually analyzed in this way to remotely monitor operation.

**[1027]** In embodiments, vibration noise may be compared, such as by the expert system, to stored vibration fingerprints and associated states and outcomes in the library, or alternatively, may be used to seed an expert system to predict when maintenance is required (e.g., off-nominal measurement, artifacts in signal, etc.), such as when vibration noise is matched to a condition when the equipment/component required maintenance, vibration noise exceeds a threshold/limit, vibration noise exceeds a threshold/limit or matches a library vibration fingerprint together with one or more additional parameters, as described herein. For example, when the vibration fingerprint from a turbine agitator in a pharmaceutical processing plant matches a vibration fingerprint for a turbine agitator when it required a replacement bearing, the expert system may cause an action to occur, such as immediately shutting down the agitator or scheduling its shutdown and maintenance.

**[1028]** In embodiments, vibration noise may be compared, such as by the expert system, to stored vibration fingerprints and associated states and outcomes in the library, or alternatively, may be used to seed an expert system to predict a failure or an imminent failure. For example, vibration noise from a gas agitator in a pharmaceutical processing plant may be matched to a condition when the agitator previously failed or was about to fail. In this example, the expert system may immediately shut down the agitator, schedule its shutdown, or cause a backup agitator to come online. In another example, vibration noise from a pump blasting liquid agitator in a chemical processing plant may exceed a threshold or limit and the expert system may cause an investigation into the cause of the excess vibration noise, shut down the agitator, or the like. In another example, vibration noise from an anchor agitator in a pharmaceutical processing plant may exceed a threshold/limit or match a library vibration fingerprint together with one or more additional parameters (see parameters herein), such as a decreased flow rate, increased temperature, or the like. Using vibration noise taken together with the parameters, the expert system may more reliably predict the failure or imminent failure.

**[1029]** In embodiments, vibration noise may be compared, such as by the expert system, to stored vibration fingerprints and associated states and outcomes in the library, or alternatively, may be used to seed an expert system to predict or diagnose a problem (e.g., unbalanced, misaligned, worn, or damaged) with the equipment or an external source contributing vibration noise to the equipment. For example, when the vibration noise from a paddle-type agitator mixer matches a vibration fingerprint from a prior imbalance, the expert system may immediately shut down the mixer.

**[1030]** In embodiments, when the expert system makes a prediction of an outcome or state using vibration noise, the expert system may perform a downstream action, or cause it to be performed. Downstream actions may include: triggering an alert of a failure, imminent failure, or maintenance event; shutting down equipment/component; initiating maintenance/lubrication/alignment; deploying a field technician; recommending a vibration absorption/dampening device; modifying a process to utilize backup equipment/component; modifying a process to preserve products/reactants, etc.; generating/modifying a maintenance schedule; coupling the vibration fingerprint with duty cycle of the equipment, RPM, flow rate, pressure, temperature or other vibration-driving characteristic to obtain equipment/component status and generate a report, and the like. For example, vibration noise for a catalytic reactor in a chemical processing plant may be matched to a condition when the catalytic reactor required maintenance. Based on this predicted state of required maintenance, the expert system may deploy a field technician to perform the maintenance.

**[1031]** In embodiments, the library may be updated if a changed parameter resulted in a new vibration fingerprint, or if a predicted outcome or state did not occur in the absence

of mitigation. In embodiments, the library may be updated if a vibration fingerprint was associated with an alternative state than what was predicted by the library. The update may occur after just one time that the state that actually occurred did not match the predicted state from the library. In other embodiments, it may occur after a threshold number of times. In embodiments, the library may be updated to apply one or more rules for comparison, such as rules that govern how many parameters to match along with the vibration fingerprint, or the standard deviation for the match in order to accept the predicted outcome.

**[1032]** In embodiments, vibration noise may be compared, such as by the expert system, to stored vibration fingerprints and associated states and outcomes in the library, or alternatively, may be used to seed an expert system to determine if a change in a system parameter external or internal to the machine has an effect on its intrinsic operation. In embodiments, a change in one or more of a temperature, flow rate, materials in use, duration of use, power source, installation, or other parameter (see parameters above) may alter the vibration fingerprint of a machine. For example, in a pressure reactor in a chemical processing plant, the flow rate and a reactant may be changed. The changes may alter the vibration fingerprint of the machine such that the vibration fingerprint stored in the library for normal operation is no longer correct.

**[1033]** Ambient noise, or the overall sound environment of the area and/or overall vibration of the device of interest, optionally in conjunction with other ambient sensed conditions, may be used in detecting or predicting events, outcomes, or states. Ambient noise may be measured by a microphone, ultrasound sensors, acoustic wave sensors, optical vibration sensors (e.g., using a camera to see oscillations that produce noise), or "deep learning" neural networks involving various sensor arrays that learn, using large data sets, to identify patterns, sounds types, noise types, etc. In an embodiment, the ambient sensed condition may relate to motion detection. For example, the motion may be a platform motion (e.g., vehicle, oil platform, suspended platform on land, etc.) or an object motion (e.g., moving equipment, people, robots, parts (e.g., fan blades or turbine blades), etc.). In an embodiment, the ambient sensed condition may be sensed by imaging, such as to detect a location and nature of various machines, equipment, and other objects, such as ones that might impact local vibration. In an embodiment, the ambient sensed condition may be sensed by thermal detection and imaging (e.g., for presence of people; presence of heat sources that may affect performance parameters, etc.). In an embodiment, the ambient sensed condition may be sensed by field detection (e.g., electrical, magnetic, etc.). In an embodiment, the ambient sensed condition may be sensed by chemical detection (e.g., smoke, other conditions). Any sensor data may be used by the expert system to provide an ambient sensed condition for analysis along with the vibration fingerprint to predict an outcome, event, or state. For example, an ambient sensed condition near a stirrer or mixer in a food processing plant may be the operation of a space heater during winter months, wherein the ambient sensed condition may include an ambient noise and an ambient temperature.

**[1034]** In an aspect, local noise may be the noise or vibration environment which is ambient, but known to be locally generated. The expert system may filter out ambient noise, employ common mode noise removal, and/or physically isolate the sensing environment.

**[1035]** In embodiments, a system for data collection in an industrial environment may use ambient, local and vibration noise for prediction of outcomes, events, and states. A library may be populated with each of the three noise types for various conditions (e.g., start up, shut down, normal operation, other periods of operation as described elsewhere herein). In other embodiments, the library may be populated with noise patterns representing the aggregate ambient, local, and/or vibration noise. Analysis (e.g., filtering, signal conditioning, spectral analysis, trend analysis) may be performed on the aggregate noise to obtain a characteristic noise pattern and identify changes in noise pattern as possible indicators of a changed condition. A library of noise patterns may be generated with established vibration fingerprints and local and ambient noise that can be sorted by a parameter (see parameters herein), or other parameters/features of the local and ambient environment (e.g., company type, industry type, products, robotic handling unit present/not present, operating environment, flow rates, production rates, brand or type of auxiliary equipment (e.g., filters, seals, coupled machinery)). The library of noise patterns may be used by an expert system, such as one with machine learning capacity, to confirm a status of a machine, predict when maintenance is required (e.g., off-nominal measurement, artifacts in signal), predict a failure or an imminent failure, predict/diagnose a problem, and the like.

**[1036]** Based on a current noise pattern, the library may be consulted or used to seed an expert system to predict an outcome, event, or state based on the noise pattern. Based on the prediction, the expert system may one or more of trigger an alert of a failure, imminent failure, or maintenance event, shut down equipment/component/line, initiate maintenance/lubrication/alignment, deploy a field technician, recommend a vibration absorption/dampening device, modify a process to utilize backup equipment/component, modify a process to preserve products/reactants, etc., generate/modify a maintenance schedule, or the like.

**[1037]** For example, a noise pattern for a thermic heating system in a pharmaceutical plant or cooking system may include local, ambient, and vibration noise. The ambient noise may be a result of, for example, various pumps to pump fuel into the system. Local noise may be a result of a local security camera chirping with every detection of motion. Vibration noise may result from the combustion machinery used to heat the thermal fluid. These noise sources may form a noise pattern which may be associated with a state of the thermic system. The noise pattern and associated state may be stored in a library. An expert system used to monitor the state of the thermic heating system may be seeded with noise patterns and associated states from the library. As current data are received into the expert system, it may predict a state based on having learned noise patterns and associated states.

**[1038]** In another example, a noise pattern for boiler feed water in a refinery may include local and ambient noise. The local noise may be attributed to the operation of, for example, a feed pump feeding the feed water into a steam drum. The ambient noise may be attributed to nearby fans. These noise sources may form a noise pattern which may be associated with a state of the boiler feed water. The noise pattern and associated state may be stored in a library. An expert system used to monitor the state of the boiler may be

seeded with noise patterns and associated states from the library. As current data are received into the expert system, it may predict a state based on having learned noise patterns and associated states.

**[1039]** In yet another example, a noise pattern for a storage tank in a refinery may include local, ambient, and vibration noise. The ambient noise may be a result of, for example, a pump that pumps a product into the tank. Local noise may be a result of a fan ventilating the tank room. Vibration noise may result from line noise of a power supply into the storage tank. These noise sources may form a noise pattern which may be associated with a state of the storage tank. The noise pattern and associated state may be stored in a library. An expert system used to monitor the state of the storage tank may be seeded with noise patterns and associated states from the library. As current data are received into the expert system, it may predict a state based on having learned noise patterns and associated states.

**[1040]** In another example, a noise pattern for condensate/make-up water system in a power station may include vibration and ambient noise. The ambient noise may be attributed to nearby fans. The vibration noise may be attributed to the operation of the condenser. These noise sources may form a noise pattern which may be associated with a state of the condensate/make-up water system. The noise pattern and associated state may be stored in a library. An expert system used to monitor the state of the condensate/make-up water system may be seeded with noise patterns and associated states from the library. As current data are received into the expert system, it may predict a state based on having learned noise patterns and associated states.

**[1041]** A library of noise patterns may be updated if a changed parameter resulted in a new noise pattern or if a predicted outcome or state did not occur in the absence of mitigation of a diagnosed problem. A library of noise patterns may be updated if a noise pattern resulted in an alternative state than what was predicted by the library. The update may occur after just one time that the state that actually occurred did not match the predicted state from the library. In other embodiments, it may occur after a threshold number of times. In embodiments, the library may be updated to apply one or more rules for comparison, such as rules that govern how many parameters to match along with the noise pattern, or the standard deviation for the match in order to accept the predicted outcome. For example, a baffle may be replaced in a static agitator in a pharmaceutical processing plant which may result in a changed noise pattern. In another example, as the seal on a pressure cooker in a food processing plant ages, the noise pattern associated with the pressure cooker may change.

**[1042]** In embodiments, the library of vibration fingerprints, noise sources and/or noise patterns may be available for subscription. The libraries may be used in offset systems to improve operation of the local system. Subscribers may subscribe at any level (e.g., component, machinery, installation, etc.) in order to access data that would normally not be available to them, such as because it is from a competitor, or is from an installation of the machinery in a different industry not typically considered. Subscribers may search on indicators/predictors based on or filtered by system conditions, or update an indicator/predictor with proprietary data to customize the library. The library may further include parameters and metadata auto-generated by deployed sensors throughout an installation, onboard diagnostic systems and instrumentation and sensors, ambient sensors in the environment, sensors (e.g., in flexible sets) that can be put into place temporarily, such as in one or more mobile data collectors, sensors that can be put into place for longer term use, such as being attached to points of interest on devices or systems, and the like.

**[1043]** In embodiments, a third party (e.g., RMOs, manufacturers) can aggregate data at the component level, equipment level, factory/installation level and provide a statistically valid data set against which to optimize their own systems. For example, when a new installation of a machine is contemplated, it may be beneficial to review a library for best data points to acquire in making state predictions. For example, a particular sensor package may be recommended to reliably determine if there will be a failure. For example, if vibration noise of equipment coupled with particular levels of local noise or other ambient sensed conditions reliably is an indicator of imminent failure, a given vibration transducer/temp/microphone package observing those elements may be recommended for the installation Knowing such information may inform the choice to rent or buy a piece of machinery or associated warranties and service plans, such as based on knowing the quantity and depth of information that may be needed to reliably maintain the machinery.

**[1044]** In embodiments, manufacturers may utilize the library to rapidly collect in-service information for machines to draft engineering specifications for new customers.

**[1045]** In embodiments, noise and vibration data may be used to remotely monitor installs and automatically dispatch a field crew.

**[1046]** In embodiments, noise and vibration data may be used to audit a system. For example, equipment running outside the range of a licensed duty cycle may be detected by a suite of vibration sensors and/or ambient/local noise sensors. In embodiments, alerts may be triggered of potential out-of-warranty violations based on data from vibration sensors and/or ambient/local noise sensors.

**[1047]** In embodiments, noise and vibration data may be used in maintenance. This may be particularly useful where multiple machines are deployed that may vibrationally interact with the environment, such as two large generating machines on the same floor or platform with each other, such as in power generation plants.

**[1048]** In embodiments, a monitoring system **10800** for data collection in an industrial environment, may include a plurality of sensors **10802** selected among vibration sensors, ambient environment condition sensors and local sensors for collecting non-vibration data proximal to a machine in the environment, the plurality of sensors **10802** communicatively coupled to a data collector **10804**, a data collection circuit **10808** structured to collect output data **10810** from the plurality of sensors **10802**, and a machine learning data analysis circuit **10812** structured to receive the output data **10810** and learn received output data patterns **10814** predictive of at least one of an outcome and a state. The state may correspond to an outcome relating to a machine in the environment, an anticipated outcome relating to a machine in the environment, an outcome relating to a process in the environment, or an anticipated outcome relating to a process in the environment. The system may be deployed on the data collector **10804** or distributed between the data collector **10804** and a remote infrastructure. The data collector **10804** may include the data collection circuit **10808**. The ambient

environment condition or local sensors include one or more of a noise sensor, a temperature sensor, a flow sensor, a pressure sensor, a chemical sensor, a vibration sensor, an acceleration sensor, an accelerometer, a Pressure sensor, a force sensor, a position sensor, a location sensor, a velocity sensor, a displacement sensor, a temperature sensor, a thermographic sensor, a heat flux sensor, a tachometer sensor, a motion sensor, a magnetic field sensor, an electrical field sensor, a galvanic sensor, a current sensor, a flow sensor, a gaseous flow sensor, a non-gaseous fluid flow sensor, a heat flow sensor, a particulate flow sensor, a level sensor, a proximity sensor, a toxic gas sensor, a chemical sensor, a CBRNE sensor, a pH sensor, a hygrometer, a moisture sensor, a densitometer, an imaging sensor, a camera, an SSR, a triax probe, an ultrasonic sensor, a touch sensor, a microphone, a capacitive sensor, a strain gauge, an EMF meter, and the like.

**[1049]** In embodiments, a monitoring system **10800** for data collection in an industrial environment may include a data collection circuit **10808** structured to collect output data **10810** from a plurality of sensors **10802** selected among vibration sensors, ambient environment condition sensors and local sensors for collecting non-vibration data proximal to a machine in the environment, the plurality of sensors **10802** communicatively coupled to a data collection circuit **10808**, and a machine learning data analysis circuit **10812** structured to receive the output data **10810** and learn received output data patterns **10814** predictive of at least one of an outcome and a state, wherein the monitoring system **10800** is structured to determine if the output data matches a learned received output data pattern. The machine learning data analysis circuit **10812** may be structured to learn received output data patterns **10814** by being seeded with a model **10816**. The model **10816** may be a physical model, an operational model, or a system model. The machine learning data analysis circuit **10812** may be structured to learn received output data patterns **10814** based on the outcome or the state. The monitoring system **10700** keeps or modifies operational parameters or equipment based on the predicted outcome or the state. The data collection circuit **10808** collects more or fewer data points from one or more of the plurality of sensors **10802** based on the learned received output data patterns **10814**, the outcome or the state. The data collection circuit **10808** changes a data storage technique for the output data based on the learned received output data patterns **10814**, the outcome, or the state. The data collector **10804** changes a data presentation mode or manner based on the learned received output data patterns **10814**, the outcome, or the state. The data collection circuit **10808** applies one or more filters (low pass, high pass, band pass, etc.) to the output data. The data collection circuit **10808** adjusts the weights/biases of the machine learning data analysis circuit **10812**, such as in response to the learned received output data patterns **10814**. The monitoring system **10800** removes/re-tasks under-utilized equipment based on one or more of the learned received output data patterns **10814**, the outcome, or the state. The machine learning data analysis circuit **10812** may include a neural network expert system. The machine learning data analysis circuit **10812** may be structured to learn received output data patterns **10814** indicative of progress/alignment with one or more goals/guidelines, wherein progress/alignment of each goal/guideline is determined by a different subset of the plurality of sensors **10802**. The machine learning data analysis circuit **10812** may be structured to learn received output data patterns **10814** indicative of an unknown variable. The machine learning data analysis circuit **10812** may be structured to learn received output data patterns **10814** indicative of a preferred input sensor among available input sensors. The machine learning data analysis circuit **10812** may be disposed in part on a machine, on one or more data collection circuits **10808**, in network infrastructure, in the cloud, or any combination thereof. The output data **10810** from the vibration sensors forms a vibration fingerprint, which may include one or more of a frequency, a spectrum, a velocity, a peak location, a wave peak shape, a waveform shape, a wave envelope shape, an acceleration, a phase information, and a phase shift. The data collection circuit **10808** may apply a rule regarding how many parameters of the vibration fingerprint to match or the standard deviation for the match in order to identify a match between the output data **10810** and the learned received output data pattern. The state may be one of a normal operation, a maintenance required, a failure, or an imminent failure. The monitoring system **10800** may trigger an alert, shut down equipment/component/line, initiate maintenance/lubrication/alignment based on the predicted outcome or state, deploy a field technician based on the predicted outcome or state, recommend a vibration absorption/dampening device based on the predicted outcome or state, modify a process to utilize backup equipment/component based on the predicted outcome or state, and the like. The monitoring system **10800** may modify a process to preserve products/reactants, etc. based on the predicted outcome or state. The monitoring system **10800** may generate or modify a maintenance schedule based on the predicted outcome or state. The data collection circuit **10808** may include the data collection circuit **10808**. The system may be deployed on the data collection circuit **10808** or distributed between the data collection circuit **10808** and a remote infrastructure.

**[1050]** In embodiments, a monitoring system **10800** for data collection in an industrial environment may include a data collection circuit **10808** structured to collect output data **10810** from a plurality of sensors **10802** selected among vibration sensors, ambient environment condition sensors and local sensors for collecting non-vibration data proximal to a machine in the environment, the plurality of sensors **10802** communicatively coupled to the data collection circuit **10808**, and a machine learning data analysis circuit **10812** structured to receive the output data **10810** and learn received output data patterns **10814** predictive of at least one of an outcome and a state, wherein the monitoring system **10800** is structured to determine if the output data matches a learned received output data pattern and keep or modify operational parameters or equipment based on the determination.

**[1051]** In embodiments, a monitoring system **10800** for data collection in an industrial environment may include a data collection circuit **10808** structured to collect output data **10810** from the plurality of sensors **10802** selected among vibration sensors, ambient environment condition sensors and local sensors for collecting non-vibration data proximal to a machine in the environment, the plurality of sensors **10802** communicatively coupled to the data collection circuit **10808**, and a machine learning data analysis circuit **10812** structured to receive the output data **10810** and learn received output data patterns **10814** predictive of at least one of an outcome and a state, wherein the output data **10810**

from the vibration sensors forms a vibration fingerprint. The vibration fingerprint may include one or more of a frequency, a spectrum, a velocity, a peak location, a wave peak shape, a waveform shape, a wave envelope shape, an acceleration, a phase information, and a phase shift. The data collection circuit **10808** may apply a rule regarding how many parameters of the vibration fingerprint to match or the standard deviation for the match in order to identify a match between the output data **10810** and the learned received output data pattern. The monitoring system **10800** may be structured to determine if the output data matches a learned received output data pattern and keep or modify operational parameters or equipment based on the determination.

**[1052]** In embodiments, a monitoring system **10800** for data collection in an industrial environment may include a data collection band circuit **10818** that identifies a subset of the plurality of sensors **10802** from which to process output data, the sensors selected among vibration sensors, ambient environment condition sensors and local sensors for collecting non-vibration data proximal to a machine in the environment, the plurality of sensors **10802** communicatively coupled to a data collection band circuit **10818**, a data collection circuit **10808** structured to collect the output data **10810** from the subset of plurality of sensors **10802**, and a machine learning data analysis circuit **10812** structured to receive the output data **10810** and learn received output data patterns **10814** predictive of at least one of an outcome and a state, wherein when the learned received output data patterns **10814** do not reliably predict the outcome or the state, the data collection band circuit **10818** alters at least one parameter of at least one of the plurality of sensors **10802**. A controller **10806** identifies a new data collection band circuit **10818** based on one or more of the learned received output data patterns **10814** and the outcome or state. The machine learning data analysis circuit **10812** may be further structured to learn received output data patterns **10814** indicative of a preferred input data collection band among available input data collection bands. The system may be deployed on the data collection circuit **10808** or distributed between the data collection circuit **10808** and a remote infrastructure.

**[1053]** In embodiments, a monitoring system for data collection in an industrial environment may include a data collection circuit **10808** structured to collect output data **10810** from a plurality of sensors **10802**, the sensors selected among vibration sensors, ambient environment condition sensors and local sensors for collecting non-vibration data proximal to a machine in the environment, the plurality of sensors **10802** communicatively coupled to the data collection circuit **10808**, wherein the output data **10810** from the vibration sensors is in the form of a vibration fingerprint, a data structure **10820** comprising a plurality of vibration fingerprints and associated outcomes, and a machine learning data analysis circuit **10812** structured to receive the output data **10810** and learn received output data patterns **10814** predictive of an outcome or a state based on processing of the vibration fingerprints. The machine learning data analysis circuit **10812** may be seeded with one of the plurality of vibration fingerprints from the data structure **10820**. The data structure **10820** may be updated if a changed parameter resulted in a new vibration fingerprint or if a predicted outcome did not occur in the absence of mitigation. The data structure **10820** may be updated when the learned received output data patterns **10814** do not reliably predict the outcome or the state. The system may be deployed on the data collection circuit or distributed between the data collection circuit and a remote infrastructure.

**[1054]** In embodiments, a monitoring system **10800** for data collection in an industrial environment may include a data collection circuit **10808** structured to collect output data **10810** from a plurality of sensors **10802** selected among vibration sensors, ambient environment condition sensors and local sensors for collecting non-vibration data proximal to a machine in the environment, the plurality of sensors **10802** communicatively coupled to a data collection circuit **10808**, wherein the output data **10810** from the plurality of sensors **10802** is in the form of a noise pattern, a data structure **10820** comprising a plurality of noise patterns and associated outcomes, and a machine learning data analysis circuit **10812** structured to receive the output data **10810** and learn received output data patterns **10814** predictive of an outcome or a state based on processing of the noise patterns.

**[1055]** In embodiments, a monitoring system for data collection in an industrial environment may comprise: a plurality of sensors selected among vibration sensors, ambient environment condition sensors and local sensors for collecting non-vibration data proximal to a machine in the environment, the plurality of sensors communicatively coupled to a data collector; a data collection circuit structured to collect output data from the plurality of sensors; and a machine learning data analysis circuit structured to receive the output data and learn received output data patterns predictive of at least one of an outcome and a state. The state may correspond to an outcome, anticipated outcome, outcome relating to a process, as relating to a machine in the environment. The system may be deployed on the data collector. The system may be distributed between the data collector and a remote infrastructure. The ambient environment condition sensors may include a noise sensor, a temperature sensor, a flow sensor, a pressure sensor, include a chemical sensor, a noise sensor, a temperature sensor, a flow sensor, a pressure sensor, a chemical sensor, a vibration sensor, an acceleration sensor, an accelerometer, a pressure sensor, a force sensor, a position sensor, a location sensor, a velocity sensor, a displacement sensor, a temperature sensor, a thermographic sensor, a heat flux sensor, a tachometer sensor, a motion sensor, a magnetic field sensor, an electrical field sensor, a galvanic sensor, a current sensor, a flow sensor, a gaseous flow sensor, a non-gaseous fluid flow sensor, a heat flow sensor, a particulate flow sensor, a level sensor, a proximity sensor, a toxic gas sensor, a chemical sensor, a CBRNE sensor, a pH sensor, a hygrometer, a moisture sensor, a densitometer, an imaging sensor, a camera, an SSR, a triax probe, an ultrasonic sensor, a touch sensor, a microphone, a capacitive sensor, a strain gauge, and an EMF meter. The local sensors may comprise one or more of a vibration sensor, an acceleration sensor, an accelerometer, a pressure sensor, a force sensor, a position sensor, a location sensor, a velocity sensor, a displacement sensor, a temperature sensor, a thermographic sensor, a heat flux sensor, a tachometer sensor, a motion sensor, a magnetic field sensor, an electrical field sensor, a galvanic sensor, a current sensor, a flow sensor, a gaseous flow sensor, a non-gaseous fluid flow sensor, a heat flow sensor, a particulate flow sensor, a level sensor, a proximity sensor, a toxic gas sensor, a chemical sensor, a CBRNE sensor, a pH sensor, a hygrometer, a moisture sensor, a densitometer, an imaging

sensor, a camera, an SSR, a triax probe, an ultrasonic sensor, a touch sensor, a microphone, a capacitive sensor, a strain gauge, and an EMF meter.

**[1056]** In embodiments, a monitoring system for data collection in an industrial environment may comprise: a data collection circuit structured to collect output data from a plurality of sensors selected among vibration sensors, ambient environment condition sensors and local sensors for collecting non-vibration data proximal to a machine in the environment, the plurality of sensors communicatively coupled to the data collection circuit; and a machine learning data analysis circuit structured to receive the output data and learn received output data patterns predictive of at least one of an outcome and a state, wherein the monitoring system is structured to determine if the output data matches a learned received output data pattern. In embodiments, the machine learning data analysis circuit may be structured to learn received output data patterns by being seeded with a model, such as where the model is a physical model, an operational model, or a system model. The machine learning data analysis circuit may be structured to learn received output data patterns based on the outcome or the state. The monitoring system may keep or modify operational parameters or equipment based on the predicted outcome or the state. The data collection circuit collects data points from one or more of the plurality of sensors based on the learned received output data patterns, the outcome, or the state. The data collection circuit may change a data storage technique for the output data based on the learned received output data patterns, the outcome, or the state. The data collection circuit may change a data presentation mode or manner based on the learned received output data patterns, the outcome, or the state. The data collection circuit may apply one or more filters (low pass, high pass, band pass, etc.) to the output data. The data collection circuit may adjust the weights/biases of the machine learning data analysis circuit, such as where the adjustment is in response to the learned received output data patterns. The monitoring system may remove, or re-task under-utilized equipment based on one or more of the learned received output data patterns, the outcome, or the state. The machine learning data analysis circuit may include a neural network expert system. The machine learning data analysis circuit may be structured to learn received output data patterns indicative of progress/alignment with one or more goals or guidelines, such as where progress or alignment of each goal or guideline is determined by a different subset of the plurality of sensors. The machine learning data analysis circuit may be structured to learn received output data patterns indicative of an unknown variable. The machine learning data analysis circuit may be structured to learn received output data patterns indicative of a preferred input sensor among available input sensors. The machine learning data analysis circuit may be disposed in part on a machine, on one or more data collectors, in network infrastructure, in the cloud, or any combination thereof. The output data from the vibration sensors may form a vibration fingerprint, such as where the vibration fingerprint includes one or more of a frequency, a spectrum, a velocity, a peak location, a wave peak shape, a waveform shape, a wave envelope shape, an acceleration, a phase information, and a phase shift. The data collection circuit may apply a rule regarding how many parameters of the vibration fingerprint to match or the standard deviation for the match in order to identify a match between the output data and the learned received output data pattern. The state may be one of a normal operation, a maintenance required, a failure, or an imminent failure. The monitoring system may trigger an alert based on the predicted outcome or state. The monitoring system may shut down equipment, component, or line based on the predicted outcome or state. The monitoring system may initiate maintenance, lubrication, or alignment based on the predicted outcome or state. The monitoring system may deploy a field technician based on the predicted outcome or state. The monitoring system may recommend a vibration absorption or dampening device based on the predicted outcome or state. The monitoring system may modify a process to utilize backup equipment or a component based on the predicted outcome or state. The monitoring system may modify a process to preserve products or reactants based on the predicted outcome or state. The monitoring system may generate or modify a maintenance schedule based on the predicted outcome or state. The system may be distributed between the data collector and a remote infrastructure.

**[1057]** In embodiments, a monitoring system for data collection in an industrial environment may comprise: a data collection circuit structured to collect output data from a plurality of sensors selected among vibration sensors, ambient environment condition sensors and local sensors for collecting non-vibration data proximal to a machine in the environment, the plurality of sensors communicatively coupled to the data collection circuit; and a machine learning data analysis circuit structured to receive the output data and learn received output data patterns predictive of at least one of an outcome and a state, wherein the monitoring system is structured to determine if the output data matches a learned received output data pattern and keep or modify operational parameters or equipment based on the determination.

**[1058]** In embodiments, a monitoring system for data collection in an industrial environment may comprise: a data collection circuit structured to collect output data from a plurality of sensors selected among vibration sensors, ambient environment condition sensors and local sensors for collecting non-vibration data proximal to a machine in the environment, the plurality of sensors communicatively coupled to the data collection circuit; and a machine learning data analysis circuit structured to receive the output data and learn received output data patterns predictive of at least one of an outcome and a state, wherein the output data from the vibration sensors forms a vibration fingerprint. In embodiments, the vibration fingerprint may comprise one or more of a frequency, a spectrum, a velocity, a peak location, a wave peak shape, a waveform shape, a wave envelope shape, an acceleration, a phase information, and a phase shift. The data collection circuit may apply a rule regarding how many parameters of the vibration fingerprint to match or the standard deviation for the match in order to identify a match between the output data and the learned received output data pattern. The monitoring system may be structured to determine if the output data matches a learned received output data pattern and keep or modify operational parameters or equipment based on the determination.

**[1059]** In embodiments, a monitoring system for data collection in an industrial environment may comprise: a data collection band circuit that identifies a subset of a plurality of sensors from which to process output data, the sensors selected among vibration sensors, ambient environment condition sensors and local sensors for collecting non-

vibration data proximal to a machine in the environment, the plurality of sensors communicatively coupled to the data collection band circuit; a data collection circuit structured to collect the output data from the subset of plurality of sensors; and a machine learning data analysis circuit structured to receive the output data and learn received output data patterns predictive of at least one of an outcome and a state wherein when the learned received output data patterns do not reliably predict the outcome or the state, the data collection band circuit alters at least one parameter of at least one of the plurality of sensors. In embodiments, the controller may identify a new data collection band circuit based on one or more of the learned received output data patterns and the outcome or state. The machine learning data analysis circuit may be further structured to learn received output data patterns indicative of a preferred input data collection band among available input data collection bands. The system may be distributed between the data collection circuit and a remote infrastructure.

**[1060]** In embodiments, a monitoring system for data collection in an industrial environment may comprise a data collection circuit structured to collect output data from the plurality of sensors, the sensors selected among vibration sensors, ambient environment condition sensors and local sensors for collecting non-vibration data proximal to a machine in the environment and being communicatively coupled to the data collection circuit, wherein the output data from the vibration sensors is in the form of a vibration fingerprint; a data structure comprising a plurality of vibration fingerprints and associated outcomes; and a machine learning data analysis circuit structured to receive the output data and learn received output data patterns predictive of an outcome or a state based on processing of the vibration fingerprints. The machine learning data analysis circuit may be seeded with one of the plurality of vibration fingerprints from the data structure. The data structure may be updated if a changed parameter resulted in a new vibration fingerprint or if a predicted outcome did not occur in the absence of mitigation. The data structure may be updated when the learned received output data patterns do not reliably predict the outcome or the state. The system may be distributed between the data collection circuit and a remote infrastructure.

**[1061]** In embodiments, a monitoring system for data collection in an industrial environment may comprise a data collection circuit structured to collect output data from the plurality of sensors selected among vibration sensors, ambient environment condition sensors and local sensors for collecting non-vibration data proximal to a machine in the environment, the plurality of sensors communicatively coupled to the data collection circuit, wherein the output data from the plurality of sensors is in the form of a noise pattern; a data structure comprising a plurality of noise patterns and associated outcomes; and a machine learning data analysis circuit structured to receive the output data and learn received output data patterns predictive of an outcome or a state based on processing of the noise patterns.

**[1062]** An example system for data collection in an industrial environment includes an industrial system having a number of components, and a number of sensors wherein each of the sensors is operatively coupled to at least one of the components. The example system further includes a sensor communication circuit that interprets a number of sensor data values in response to a sensed parameter group, a pattern recognition circuit that determines a recognized pattern value in response to a least a portion of the sensor data values, and a sensor learning circuit that updates the sensed parameter group in response to the recognized pattern value. The example sensor communication circuit further adjusts the interpreting the sensor data values in response to the updated sensed parameter group.

**[1063]** Certain further aspects of an example system are described following, any one or more of which may be present in certain embodiments. An example system includes the sensed parameter group being a fused number of sensors, and where the recognized pattern value further includes a secondary value including a value determined in response to the fused number of sensors. An example system further includes the pattern recognition circuit and the sensor learning circuit iteratively performing the determining the recognized pattern value and the updating the sensed parameter group to improve a sensing performance value. An example system further includes the sensing performance value include a determination of one or more of the following: a signal-to-noise performance for detecting a value of interest in the industrial system; a network utilization of the sensors in the industrial system; an effective sensing resolution for a value of interest in the industrial system; a power consumption value for a sensing system in the industrial system, the sensing system including the sensors; a calculation efficiency for determining the secondary value; an accuracy and/or a precision of the secondary value; a redundancy capacity for determining the secondary value; and/or a lead time value for determining the secondary value. Example and non-limiting calculation efficiency values include one or more determinations such as: processor operations to determine the secondary value; memory utilization for determining the secondary value; a number of sensor inputs from the number of sensors for determining the secondary value; and/or supporting data long-term storage for supporting the secondary value.

**[1064]** An example system includes one or more, or all, of the sensors as analog sensors and/or as remote sensors. An example system includes the secondary value being a value such as: a virtual sensor output value; a process prediction value; a process state value; a component prediction value; a component state value; and/or a model output value having the sensor data values from the fused number of sensors as an input. An example system includes the fused number of sensors being one or more of the combinations of sensors such as: a vibration sensor and a temperature sensor; a vibration sensor and a pressure sensor; a vibration sensor and an electric field sensor; a vibration sensor and a heat flux sensor; a vibration sensor and a galvanic sensor; and/or a vibration sensor and a magnetic sensor.

**[1065]** An example sensor learning circuit further updates the sensed parameter group by performing an operation such as: updating a sensor selection of the sensed parameter group; updating a sensor sampling rate of at least one sensor from the sensed parameter group; updating a sensor resolution of at least one sensor from the sensed parameter group; updating a storage value corresponding to at least one sensor from the sensed parameter group; updating a priority corresponding to at least one sensor from the sensed parameter group; and/or updating at least one of a sampling rate, sampling order, sampling phase, and/or a network path configuration corresponding to at least one sensor from the sensed parameter group. An example pattern recognition

circuit further determines the recognized pattern value by performing an operation such as: determining a signal effectiveness of at least one sensor of the sensed parameter group and the updated sensed parameter group relative to a value of interest; determining a sensitivity of at least one sensor of the sensed parameter group and the updated sensed parameter group relative to the value of interest; determining a predictive confidence of at least one sensor of the sensed parameter group and the updated sensed parameter group relative to the value of interest; determining a predictive delay time of at least one sensor of the sensed parameter group and the updated sensed parameter group relative to the value of interest; determining a predictive accuracy of at least one sensor of the sensed parameter group and the updated sensed parameter group relative to the value of interest; determining a predictive precision of at least one sensor of the sensed parameter group and the updated sensed parameter group relative to the value of interest; and/or updating the recognized pattern value in response to external feedback. Example and non-limiting values of interest include: a virtual sensor output value; a process prediction value; a process state value; a component prediction value; a component state value; and/or a model output value having the sensor data values from the fused plurality of sensors as an input.

**[1066]** An example pattern recognition circuit further accesses cloud-based data including a second number of sensor data values, the second number of sensor data values corresponding to at least one offset industrial system. An example sensor learning circuit further accesses the cloud-based data including a second updated sensor parameter group corresponding to the at least one offset industrial system.

**[1067]** An example procedure for data collection in an industrial environment includes an operation to provide a number of sensors to an industrial system including a number of components, each of the number of sensors operatively coupled to at least one of the number of components, an operation to interpret a number of sensor data values in response to a sensed parameter group, the sensed parameter group including a fused number of sensors from the number of sensors, an operation to determine a recognized pattern value including a secondary value determined in response to the number of sensor data values, an operation to update the sensed parameter group in response to the recognized pattern value, and an operation to adjust the interpreting the number of sensor data values in response to the updated sensed parameter group.

**[1068]** Certain further aspects of an example procedure are described following, any one or more of which may be included in certain embodiments. An example procedure includes an operation to iteratively perform the determining the recognized pattern value and the updating the sensed parameter group to improve a sensing performance value, where determining the sensing performance value includes an least one operation for determining a value, such as determining: a signal-to-noise performance for detecting a value of interest in the industrial system; a network utilization of the plurality of sensors in the industrial system; an effective sensing resolution for a value of interest in the industrial system; a power consumption value for a sensing system in the industrial system, the sensing system including the plurality of sensors; a calculation efficiency for determining the secondary value; an accuracy and/or a precision of the secondary value; a redundancy capacity for determining the secondary value; and/or a lead time value for determining the secondary value.

**[1069]** An example procedure includes an operation to update the sensed parameter group comprised by performing at least one operation such as: updating a sensor selection of the sensed parameter group; updating a sensor sampling rate of at least one sensor from the sensed parameter group; updating a sensor resolution of at least one sensor from the sensed parameter group; updating a storage value corresponding to at least one sensor from the sensed parameter group; updating a priority corresponding to at least one sensor from the sensed parameter group; and/or updating at least one of a sampling rate, sampling order, sampling phase, and a network path configuration corresponding to at least one sensor from the sensed parameter group. An example procedure includes determining the recognized pattern value by performing at least one operation such as: determining a signal effectiveness of at least one sensor of the sensed parameter group and the updated sensed parameter group relative to a value of interest; determining a sensitivity of at least one sensor of the sensed parameter group and the updated sensed parameter group relative to the value of interest; determining a predictive confidence of at least one sensor of the sensed parameter group and the updated sensed parameter group relative to the value of interest; determining a predictive delay time of at least one sensor of the sensed parameter group and the updated sensed parameter group relative to the value of interest; determining a predictive accuracy of at least one sensor of the sensed parameter group and the updated sensed parameter group relative to the value of interest; determining a predictive precision of at least one sensor of the sensed parameter group and the updated sensed parameter group relative to the value of interest; and/or updating the recognized pattern value in response to external feedback.

**[1070]** The term industrial system (and similar terms) as utilized herein should be understood broadly. Without limitation to any other aspect or description of the present disclosure, an industrial system includes any large scale process system, mechanical system, chemical system, assembly line, oil and gas system (including, without limitation, production, transportation, exploration, remote operations, offshore operations, and/or refining), mining system (including, without limitation, production, exploration, transportation, remote operations, and/or underground operations), rail system (yards, trains, shipments, etc.), construction, power generation, aerospace, agriculture, food processing, and/or energy generation. Certain components may not be considered industrial individually, but may be considered industrially in an aggregated system—for example a single fan, motor, and/or engine may be not an industrial system, but may be a part of a larger system and/or be accumulated with a number of other similar components to be considered an industrial system and/or a part of an industrial system. In certain embodiments, a system may be considered an industrial system for some purposes but not for other purposes—for example a large data server farm may be considered an industrial system for certain sensing operations, such as temperature detection, vibration, or the like, but not an industrial system for other sensing operations such as gas composition. Additionally, in certain embodiments, otherwise similar looking systems may be differentiated in determining whether such system are industrial

systems, and/or which type of industrial system. For example, one data server farm may not, at a given time, have process stream flow rates that are critical to operation, while another data server farm may have process stream flow rates that are critical to operation (e.g., a coolant flow stream), and accordingly one data farm server may be an industrial system for a data collection and/or sensing improvement process or system, while the other is not. Accordingly, the benefits of the present disclosure may be applied in a wide variety of systems, and any such systems may be considered an industrial system herein, while in certain embodiments a given system may not be considered an industrial system herein. One of skill in the art, having the benefit of the disclosure herein and knowledge about a contemplated system ordinarily available to that person, can readily determine which aspects of the present disclosure will benefit a particular system, how to combine processes and systems from the present disclosure to enhance operations of the contemplated system. Certain considerations for the person of skill in the art, in determining whether a contemplated system is an industrial system and/or whether aspects of the present disclosure can benefit or enhance the contemplated system include, without limitation: the accessibility of portions of the system to positioning sensing devices; the sensitivity of the system to capital costs (e.g., initial installation) and operating costs (e.g., optimization of processes, reduction of power usage); the transmission environment of the system (e.g., availability of broadband internet; satellite coverage; wireless cellular access; the electro-magnetic ("EM") environment of the system; the weather, temperature, and environmental conditions of the system; the availability of suitable locations to run wires, network lines, and the like; the presence and/or availability of suitable locations for network infrastructure, router positioning, and/or wireless repeaters); the availability of trained personnel to interact with computing devices; the desired spatial, time, and/or frequency resolution of sensed parameters in the system; the degree to which a system or process is well understood or modeled; the turndown ratio in system operations (e.g., high load differential to low load; high flow differential to low flow; high temperature operation differential to low temperature operation); the turndown ratio in operating costs (e.g., effects of personnel costs based on time (day, season, etc.); effects of power consumption cost variance with time, throughput, etc.); the sensitivity of the system to failure, down-time, or the like; the remoteness of the contemplated system (e.g., transport costs, time delays, etc.); and/or qualitative scope of change in the system over the operating cycle (e.g., the system runs several distinct processes requiring a variable sensing environment with time; time cycle and nature of changes such as periodic, event driven, lead times generally available, etc.). While specific examples of industrial systems and considerations are described herein for purposes of illustration, any system benefitting from the disclosures herein, and any considerations understood to one of skill in the art having the benefit of the disclosures herein, are specifically contemplated within the scope of the present disclosure.

**[1071]** The term sensor (and similar terms) as utilized herein should be understood broadly. Without limitation to any other aspect or description of the present disclosure, sensor includes any device configured to provide a sensed value representative of a physical value (e.g., temperature, force, pressure) in a system, or representative of a conceptual value in a system at least having an ancillary relationship to a physical value (e.g., work, state of charge, frequency, phase, etc.).

**[1072]** Example and non-limiting sensors include vibration, acceleration, noise, pressure, force, position, location, velocity, displacement, temperature, heat flux, speed, rotational speed (e.g., a tachometer), motion, accelerometers, magnetic field, electrical field, galvanic, current, flow (gas, fluid, heat, particulates, particles, etc.), level, proximity, gas composition, fluid composition, toxicity, corrosiveness, acidity, pH, humidity, hygrometer measures, moisture, density (bulk or specific), ultrasound, imaging, analog, and/or digital sensors. The list of sensed values is a non-limiting example, and the benefits of the present disclosure in many applications can be realized independent of the sensor type, while in other applications the benefits of the present disclosure may be dependent upon the sensor type.

**[1073]** The sensor type and mechanism for detection may be any type of sensor understood in the art. Without limitation, an accelerometer may be any type and scaling, for example 500 mV per g (1 g=9.8 m/s), 100 mV, 1 V per g, 5 V per g, 10 V per g, 10 MV per g, as well as any frequency capability. It will be understood for accelerometers, and for all sensor types, that the scaling and range may be competing (e.g., in a fixed-bit or low bit A/D system), and/or selection of high resolution scaling with a large range may drive up sensor and/or computing costs, which may be acceptable in certain embodiments, and may be prohibitive in other embodiments. Example and non-limiting accelerometers include piezo-electric devices, high resolution and sampling speed position detection devices (e.g., laser based devices), and/or detection of other parameters (strain, force, noise, etc.) that can be correlated to acceleration and/or vibration. Example and non-limiting proximity probes include electro-magnetic devices (e.g., Hall effect, Variable Reluctance, etc.), a sleeve/oil film device, and/or determination of other parameters than can be correlated to proximity. An example vibration sensor includes a tri-axial probe, which may have high frequency response (e.g., scaling of 100 MV/g). Example and non-limiting temperature sensors include thermistors, thermocouples, and/or optical temperature determination.

**[1074]** A sensor may, additionally or alternatively, provide a processed value (e.g., a de-bounced, filtered, and/or compensated value) and/or a raw value, with processing downstream (e.g., in a data collector, controller, plant computer, and/or on a cloud-based data receiver). In certain embodiments, a sensor provides a voltage, current, data file (e.g., for images), or other raw data output, and/or a sensor provides a value representative of the intended sensed measurement (e.g., a temperature sensor may communicate a voltage or a temperature value). Additionally or alternatively, a sensor may communicate wirelessly, through a wired connection, through an optical connection, or by any other mechanism. The described examples of sensor types and/or communication parameters are non-limiting examples for purposes of illustration.

**[1075]** Additionally or alternatively, in certain embodiments, a sensor is a distributed physical device—for example where two separate sensing elements coordinate to provide a sensed value (e.g., a position sensing element and a mass sensing element may coordinate to provide an acceleration value). In certain embodiments, a single physical device may form two or more sensors, and/or parts of

more than one sensor. For example, a position sensing element may form a position sensor and a velocity sensor, where the same physical hardware provides the sensed data for both determinations.

**[1076]** The term smart sensor, smart device (and similar terms) as utilized herein should be understood broadly. Without limitation to any other aspect or description of the present disclosure, a smart sensor includes any sensor and aspect thereof as described throughout the present disclosure. A smart sensor includes an increment of processing reflected in the sensed value communicated by the sensor, including at least basic sensor processing (e.g., de-bouncing, filtering, compensation, normalization, and/or output limiting), more complex compensations (e.g., correcting a temperature value based on known effects of current environmental conditions on the sensed temperature value, common mode or other noise removal, etc.), a sensing device that provides the sensed value as a network communication, and/or a sensing device that aggregates a number of sensed values for communication (e.g., multiple sensors on a device communicated out in a parseable or deconvolutable manner or as separate messages; multiple sensors providing a value to a single smart sensor, which relays sensed values on to a data collector, controller, plant computer, and/or cloud-based data receiver). The use of the term smart sensor is for purposes of illustration, and whether a sensor is a smart sensor can depend upon the context and the contemplated system, and can be a relative description compared to other sensors in the contemplated system. Thus, a given sensor having identical functionality may be a smart sensor for the purposes of one contemplated system, and just a sensor for the purposes of another contemplated system, and/or may be a smart sensor in a contemplated system during certain operating conditions, and just a sensor for the purposes of the same contemplated system during other operating conditions.

**[1077]** The terms sensor fusion, fused sensors, and similar terms, as utilized herein, should be understood broadly, except where context indicates otherwise, without limitation to any other aspect or description of the present disclosure. A sensor fusion includes a determination of second order data from sensor data, and further includes a determination of second order data from sensor data of multiple sensors, including involving multiplexing of streams of data, combinations of batches of data, and the like from the multiple sensors. Second order data includes a determination about a system or operating condition beyond that which is sensed directly. For example, temperature, pressure, mixing rate, and other data may be analyzed to determine which parameters are result-effective on a desired outcome (e.g., a reaction rate). The sensor fusion may include sensor data from multiple sources, and/or longitudinal data (e.g., taken over a period of time, over the course of a process, and/or over an extent of components in a plant—for example tracking a number of assembled parts, a virtual slug of fluid passing through a pipeline, or the like). The sensor fusion may be performed in real-time (e.g., populating a number of sensor fusion determinations with sensor data as a process progresses), off-line (e.g., performed on a controller, plant computer, and/or cloud-based computing device), and/or as a post-processing operation (e.g., utilizing historical data, data from multiple plants or processes, etc.). In certain embodiments, a sensor fusion includes a machine pattern recognition operation—for example where an outcome of a process is given to the machine and/or determined by the machine, and the machine pattern recognition operation determines result-effective parameters from the detected sensor value space to determine which operating conditions were likely to be the cause of the outcome and/or the off-nominal result of the outcome (e.g., process was less effective or more effective than nominal, failed, etc.). In certain embodiments, the outcome may be a quantitative outcome (e.g., 20% more product was produced than a nominal run) or a qualitative outcome (e.g., product quality was unacceptable, component X of the contemplated system failed during the process, component X of the contemplated system required a maintenance or service event, etc.).

**[1078]** In certain embodiments, a sensor fusion operation is iterative or recursive—for example an estimated set of result effective parameters is updated after the sensor fusion operation, and a subsequent sensor fusion operation is performed on the same data or another data set with an updated set of the result effective parameters. In certain embodiments, subsequent sensor fusion operations include adjustments to the sensing scheme—for example higher resolution detections (e.g., in time, space, and/or frequency domains), larger data sets (and consequent commitment of computing and/or networking resources), changes in sensor capability and/or settings (e.g., changing an A/D scaling, range, resolution, etc.; changing to a more capable sensor and/or more capable data collector, etc.) are performed for subsequent sensor fusion operations. In certain embodiments, the sensor fusion operation demonstrates improvements to the contemplated system (e.g., production quantity, quality, and/or purity, etc.) such that expenditure of additional resources to improve the sensing scheme are justified. In certain embodiments, the sensor fusion operation provides for improvement in the sensing scheme without incremental cost—for example by narrowing the number of result effective parameters and thereby freeing up system resources to provide greater resolution, sampling rates, etc., from hardware already present in the contemplated system. In certain embodiments, iterative and/or recursive sensor fusion is performed on the same data set, a subsequent data set, and/or a historical data set. For example, high resolution data may already be present in the system, and a first sensor fusion operation is performed with low resolution data (e.g., sampled from the high resolution data set), such as to allow for completion of sensor fusion processing operations within a desired time frame, within a desired processor, memory, and/or network utilization, and/or to allow for checking a large number of variables as potential result effective parameters. In a further example, a greater number of samples from the high resolution data set may be utilized in a subsequent sensor fusion operation in response to confidence that improvements are present, narrowing of the potential result effective variables, and/or a determination that higher resolution data is required to determine the result effective parameters and/or effective values for such parameters.

**[1079]** The described operations and aspects for sensor fusion are non-limiting examples, and one of skill in the art, having the benefit of the disclosures herein and information ordinarily available about a contemplated system, can readily design a system to utilize and/or benefit from a sensor fusion operation. Certain considerations for a system to utilize and/or benefit from a sensor fusion operation include, without limitation: the number of components in the system;

the cost of components in the system; the cost of maintenance and/or down-time for the system; the value of improvements in the system (production quantity, quality, yield, etc.); the presence, possibility, and/or consequences of undesirable system outcomes (e.g., side products, thermal and/or luminary events, environmental benefits or consequences, hazards present in the system); the expense of providing a multiplicity of sensors for the system; the complexity between system inputs and system outputs; the availability and cost of computing resources (e.g., processing, memory, and/or communication throughput); the size/scale of the contemplated system and/or the ability of such a system to generate statistically significant data; whether offset systems exist, including whether data from offset systems is available and whether combining data from offset systems will generate a statistically improved data set relative to the system considered alone; and/or the cost of upgrading, improving, or changing a sensing scheme for the contemplated system. The described considerations for a contemplated system that may benefit from or utilize a sensor fusion operation are non-limiting illustrations.

**[1080]** Certain systems, processes, operations, and/or components are described in the present disclosure as "offset systems" or the like. An offset system is a system distinct from a contemplated system, but having relevance to the contemplated system. For example, a contemplated refinery may have an "offset refinery," which may be a refinery operated by a competitor, by a same entity operating the contemplated refinery, and/or a historically operated refinery that no longer exists. The offset refinery bears some relevant relationship to the contemplated refinery, such as utilizing similar reactions, process flows, production volumes, feed stock, effluent materials, or the like. A system which is an offset system for one purpose may not be an offset system for another purpose. For example, a manufacturing process utilizing conveyor belts and similar motors may be an offset process for a contemplated manufacturing process for the purpose of tracking product movement, understanding motor operations and failure modes, or the like, but may not be an offset process for product quality if the products being produced have distinct quality outcome parameters. Any industrial system contemplated herein may have an offset system for certain purposes. One of skill in the art, having the benefit of the present disclosure and information ordinarily available for a contemplated system, can readily determine what is disclosed by an offset system or offset aspect of a system.

**[1081]** Any one or more of the terms computer, computing device, processor, circuit, and/or server include a computer of any type, capable to access instructions stored in communication thereto such as upon a non-transient computer readable medium, whereupon the computer performs operations of systems or methods described herein upon executing the instructions. In certain embodiments, such instructions themselves comprise a computer, computing device, processor, circuit, and/or server. Additionally or alternatively, a computer, computing device, processor, circuit, and/or server may be a separate hardware device, one or more computing resources distributed across hardware devices, and/or may include such aspects as logical circuits, embedded circuits, sensors, actuators, input and/or output devices, network and/or communication resources, memory resources of any type, processing resources of any type, and/or hardware devices configured to be responsive to determined conditions to functionally execute one or more operations of systems and methods herein.

**[1082]** Certain operations described herein include interpreting, receiving, and/or determining one or more values, parameters, inputs, data, or other information. Operations including interpreting, receiving, and/or determining any value parameter, input, data, and/or other information include, without limitation: receiving data via a user input; receiving data over a network of any type; reading a data value from a memory location in communication with the receiving device; utilizing a default value as a received data value; estimating, calculating, or deriving a data value based on other information available to the receiving device; and/or updating any of these in response to a later received data value. In certain embodiments, a data value may be received by a first operation, and later updated by a second operation, as part of the receiving a data value. For example, when communications are down, intermittent, or interrupted, a first operation to interpret, receive, and/or determine a data value may be performed, and when communications are restored an updated operation to interpret, receive, and/or determine the data value may be performed.

**[1083]** Certain logical groupings of operations herein, for example methods or procedures of the current disclosure, are provided to illustrate aspects of the present disclosure. Operations described herein are schematically described and/or depicted, and operations may be combined, divided, re-ordered, added, or removed in a manner consistent with the disclosure herein. It is understood that the context of an operational description may require an ordering for one or more operations, and/or an order for one or more operations may be explicitly disclosed, but the order of operations should be understood broadly, where any equivalent grouping of operations to provide an equivalent outcome of operations is specifically contemplated herein. For example, if a value is used in one operational step, the determining of the value may be required before that operational step in certain contexts (e.g., where the time delay of data for an operation to achieve a certain effect is important), but may not be required before that operation step in other contexts (e.g., where usage of the value from a previous execution cycle of the operations would be sufficient for those purposes). Accordingly, in certain embodiments an order of operations and grouping of operations as described is explicitly contemplated herein, and in certain embodiments reordering, subdivision, and/or different grouping of operations is explicitly contemplated herein.

**[1084]** Referencing FIG. **142**, an example system **10902** for data collection in an industrial environment includes an industrial system **10904** having a number of components **10906**, and a number of sensors **10908**, wherein each of the sensors **10908** is operatively coupled to at least one of the components **10906**. The selection, distribution, type, and communicative setup of sensors depends upon the application of the system **10902** and/or the context.

**[1085]** The example system **10902** further includes a sensor communication circuit **10920** (reference FIG. **143**) that interprets a number of sensor data values **10948** in response to a sensed parameter group **10928**. The sensed parameter group **10928** includes a description of which sensors **10908** are sampled at which times, including at least the selected sampling frequency, a process stage wherein a particular sensor may be providing a value of interest, and the like. An example system includes the sensed parameter group **10928**

being a fused number of sensors **10926**, for example a set of sensors believed to encompass detection of operating conditions of the system that affect a desired output, such as production output, quality, efficiency, profitability, purity, maintenance or service predictions of components in the system, failure mode predictions, and the like. In a further embodiment, the recognized pattern value **10930** further includes a secondary value **10932** including a value determined in response to the fused number of sensors **10926**.

**[1086]** In certain embodiments, sensor data values **10948** are provided to a data collector **10910**, which may be in communication with multiple sensors **10908** and/or with a controller **10914**. In certain embodiments, a plant computer **10912** is additionally or alternatively present. In the example system, the controller **10914** is structured to functionally execute operations of the sensor communication circuit **10920**, pattern recognition circuit **10922**, and/or the sensor learning circuit **10924**, and is depicted as a separate device for clarity of description. Aspects of the controller **10914** may be present on the sensors **10908**, the data controller **10910**, the plant computer **10912**, and/or on a cloud computing device **10916**. In certain embodiments, all aspects of the controller **10914** may be present in another device depicted on the system **10902**. The plant computer **10912** represents local computing resources, for example processing, memory, and/or network resources, that may be present and/or in communication with the industrial system **10904**. In certain embodiments, the cloud computing device **10916** represents computing resources externally available to the industrial system **10904**, for example over a private network, intra-net, through cellular communications, satellite communications, and/or over the internet. In certain embodiments, the data controller **10910** may be a computing device, a smart sensor, a MUX box, or other data collection device capable to receive data from multiple sensors and to pass-through the data and/or store data for later transmission. An example data controller **10910** has no storage and/or limited storage, and selectively passes sensor data therethrough, with a subset of the sensor data being communicated at a given time due to bandwidth considerations of the data controller **10910**, a related network, and/or imposed by environmental constraints. In certain embodiments, one or more sensors and/or computing devices in the system **10902** are portable devices—for example a plant operator walking through the industrial system may have a smart phone, which the system **10902** may selectively utilize as a data controller **10910**, sensor **10908**—for example to enhance communication throughput, sensor resolution, and/or as a primary method for communicating sensor data values **10948** to the controller **10914**.

**[1087]** The example system **10902** further includes a pattern recognition circuit **10922** that determines a recognized pattern value **10930** in response to a least a portion of the sensor data values **10948**.

**[1088]** The example system **10902** further includes a sensor learning circuit **10924** that updates the sensed parameter group **10928** in response to the recognized pattern value **10930**. The example sensor communication circuit **10920** further adjusts the interpreting the sensor data values **10948** in response to the updated sensed parameter group **10928**.

**[1089]** An example system **10902** further includes the pattern recognition circuit **10922** and the sensor learning circuit **10924** iteratively performing the determining the recognized pattern value **10930** and the updating the sensed parameter group **10928** to improve a sensing performance value **10934**. For example, the pattern recognition circuit **10922** may add sensors, remove sensors, and/or change sensor setting to modify the sensed parameter group **10928** based upon sensors which appear to be effective or ineffective predictors of the recognized pattern value **10930**, and the sensor learning circuit **10924** may instruct a continued change (e.g., while improvement is still occurring), an increased or decreased rate of change (e.g., to converge more quickly on an improved sensed parameter group **10928**), and/or instruct a randomized change to the sensed parameter group **10928** (e.g., to ensure that all potentially result effective sensors are being checked, and/or to avoid converging into a local optimal value).

**[1090]** Example and non-limiting options for the sensing performance value **10934** include: a signal-to-noise performance for detecting a value of interest in the industrial system (e.g., a determination that the prediction signal for the value is high relative to noise factors for one or more sensors of the sensed parameter group **10928**, and/or for the sensed parameter group **10928** as a whole); a network utilization of the sensors in the industrial system (e.g., the sensor learning circuit **10924** may score a sensed parameter group **10928** relatively high where it is as effective or almost as effective as another sensed parameter group **10928**, but results in lower network utilization); an effective sensing resolution for a value of interest in the industrial system (e.g., the sensor learning circuit **10924** may score a sensed parameter group **10928** relatively high where it provides a responsive prediction of the output value to smaller changes in input values); a power consumption value for a sensing system in the industrial system, the sensing system including the sensors (e.g., the sensor learning circuit **10924** may score a sensed parameter group **10928** relatively high where it is as effective or almost as effective as another sensed parameter group **10928**, but results in lower power consumption); a calculation efficiency for determining the secondary value (e.g., the sensor learning circuit **10924** may score a sensed parameter group **10928** relatively high where it is as effective or almost as effective as another sensed parameter group **10928** in determining the secondary value **10932**, but results in fewer processor cycles, lower network utilization, and/or lower memory utilization including stored memory requirements as well as intermediate memory utilization such as buffers); an accuracy and/or a precision of the secondary value (e.g., the sensor learning circuit **10924** may score a sensed parameter group **10928** relatively high where it provides a highly accurate and/or highly precise determination of the secondary value **10932**); a redundancy capacity for determining the secondary value (e.g., the sensor learning circuit **10924** may score a sensed parameter group **10928** relatively high where it provides similar capability and/or resource utilization, but provides for additional sensing redundancy, such as being more robust to gaps in data from one or more of the sensors in the sensed parameter group **10928**); and/or a lead time value for determining the secondary value **10932** (e.g., the sensor learning circuit **10924** may score a sensed parameter group **10928** relatively high where it provides an improved or sufficient lead time in the secondary value **10932** determination—for example to assist in avoiding over-temperature operation, spoiling an entire production run, determining whether a component has sufficient service life to complete a production run, etc.) Example and non-limiting calculation efficiency values

include one or more determinations such as: processor operations to determine the secondary value **10932**; memory utilization for determining the secondary value **10932**; a number of sensor inputs from the number of sensors for determining the secondary value **10932**; and/or supporting memory, such as long-term storage or buffers for supporting the secondary value **10932**.

**[1091]** Example systems include one or more, or all, of the sensors **10908** as analog sensors and/or as remote sensors. An example system includes the secondary value **10932** being a value such as: a virtual sensor output value;

**[1092]** a process prediction value (e.g., a success value for a production run, an overtemperature value, an overpressure value, a product quality value, etc.); a process state value (e.g., a stage of the process, a temperature at a time and location in the process); a component prediction value (e.g., a component failure prediction, a component maintenance or service prediction, a component response to an operating change prediction); a component state value (a remaining service life or maintenance interval for a component); and/or a model output value having the sensor data values **10948** from the fused number of sensors **10926** as an input. An example system includes the fused number of sensors **10926** being one or more of the combinations of sensors such as: a vibration sensor and a temperature sensor; a vibration sensor and a pressure sensor; a vibration sensor and an electric field sensor; a vibration sensor and a heat flux sensor; a vibration sensor and a galvanic sensor; and/or a vibration sensor and a magnetic sensor.

**[1093]** An example sensor learning circuit **10924** further updates the sensed parameter group **10928** by performing an operation such as: updating a sensor selection of the sensed parameter group **10928** (e.g., which sensors are sampled); updating a sensor sampling rate of at least one sensor from the sensed parameter group (e.g., how fast the sensors provide information, and/or how fast information is passed through the network); updating a sensor resolution of at least one sensor from the sensed parameter group (e.g., changing or requesting a change in a sensor resolution, utilizing additional sensors to provide greater effective resolution); updating a storage value corresponding to at least one sensor from the sensed parameter group (e.g., storing data from the sensor at a higher or lower resolution, and/or over a longer or shorter time period); updating a priority corresponding to at least one sensor from the sensed parameter group (e.g., moving a sensor up to a higher priority—for example, if environmental conditions prevent data receipt from all planned sensors, and/or reducing a time lag between creation of the sensed data and receipt at the sensor learning circuit **10924**); and/or updating at least one of a sampling rate, sampling order, sampling phase, and/or a network path configuration corresponding to at least one sensor from the sensed parameter group.

**[1094]** An example pattern recognition circuit **10922** further determines the recognized pattern value **10930** by performing an operation such as: determining a signal effectiveness of at least one sensor of the sensed parameter group and the updated sensed parameter group relative to a value of interest **10950** (e.g., determining that a sensor value is a good predictor of the value of interest **10950**); determining a sensitivity of at least one sensor of the sensed parameter group **10928** and the updated sensed parameter group **10928** relative to the value of interest **10950** (e.g., determining the relative sensitivity of the determined value of interest to small changes in operating conditions based on the selected sensed parameter group **10928**); determining a predictive confidence of at least one sensor of the sensed parameter group **10928** and the updated sensed parameter group **10928** relative to the value of interest **10950**; determining a predictive delay time of at least one sensor of the sensed parameter group **10928** and the updated sensed parameter group **10928** relative to the value of interest **10950**; determining a predictive accuracy of at least one sensor of the sensed parameter group **10928** and the updated sensed parameter group **10928** relative to the value of interest **10950**; determining a classification precision of at least one sensor of the sensed parameter group **10928** (e.g., determining the accuracy of classification of a pattern by a machine classifier based on use of the at least one sensor); determining a predictive precision of at least one sensor of the sensed parameter group **10928** and the updated sensed parameter group **10928** relative to the value of interest **10950**; and/or updating the recognized pattern value **10930** in response to external feedback, which may be received as external data **10952** (e.g., where an outcome is known, such as a maintenance event, product quality determination, production outcome determination, etc., the detection of the recognized pattern value **10930** is thereby improved according to the conditions of the system before the known outcome occurred). Example and non-limiting values of interest **10950** include: a virtual sensor output value; a process prediction value; a process state value; a component prediction value; a component state value; and/or a model output value having the sensor data values from the fused plurality of sensors as an input.

**[1095]** An example pattern recognition circuit **10922** further accesses cloud-based data **10954** including a second number of sensor data values, the second number of sensor data values corresponding to at least one offset industrial system. An example sensor learning circuit **10924** further accesses the cloud-based data **10954** including a second updated sensor parameter group corresponding to the at least one offset industrial system. Accordingly, the pattern recognition circuit **10922** can improve pattern recognition in the system based on increased statistical data available from an offset system. Additionally, or alternatively, the sensor learning circuit **10924** can improve more rapidly and with greater confidence based upon the data from the offset system—including determining which sensors in the offset system found to be effective in predicting system outcomes.

**[1096]** An example system includes an industrial system including an oil refinery. An example oil refinery includes one or more compressors for transferring fluids throughout the plant, and/or for pressurizing fluid streams (e.g., for reflux in a distillation column). Additionally, or alternatively, the example oil refinery includes vacuum distillation, for example, to fractionate hydrocarbons. The example oil refinery additionally includes various pipelines in the system for transferring fluids, bringing in feedstock, final product delivery, and the like. An example system includes a number of sensors configured to determine each aspect of a distillation column—for example temperatures of various fluid streams, temperatures, and compositions of individual contact trays in the column, measurements of the feed and reflux, as well as of the effluent or separated products. The design of a distillation column is complex, and optimal design can depend upon the sizing of boilers, compressors, the contact conditions within the column, as well as the

composition of feedstock, all of which can vary significantly. Additionally, the optimal position for effective sensing of conditions in a pipeline can vary with fluid flow rates, environmental conditions (e.g., causing variation in heat transfer rates), the feedstock utilized, and other factors. Additionally, wear or loss of capability in a boiler, compressor, or other operating equipment can change the system response and capabilities, rendering a single point optimization—including where sensors should be positioned and how they should sample data—to be non-optimal as the system ages.

**[1097]** Provision of multiple sensors throughout the system can be costly, not necessarily because the sensors are expensive, but because the sensors provide data which may be prohibitive to transmit, store, and utilize Cost may involve costs of transmitting over networks, as well as costs of operations, such as numbers of input/output operations (and time required to undertake such operations). The example system includes providing a large number of sensors throughout the system, and determining which of the sensors are effective for control and optimization of the distillation process. Additionally, as the feedstock and/or environmental conditions change, the optimal sensor package for both optimization and control may change. The example system utilizes a pattern recognition circuit to determine which sensors, including sensor fusion operations (including selection of groups, selection of multiplexing and combination, and the like), are effective in controlling the desired parameters of the distillation, and in determining the optimal values for temperatures, flow rates, entry trays for feed and reflux, and/or reflux rates. Additionally, the sensor learning circuit is capable, over time and/or utilizing offset oil refineries, to rapidly converge on various sensor packages that are appropriate for a multiplicity of operating conditions. If an unexpected operating condition occurs—for example an off-nominal operation of a compressor, the sensor learning circuit is capable of migrating the system to the correct sensing and operating conditions for the unexpected operating condition. The ability to flexibly utilize a multiplicity of sensors allows for the system to be flexible in response to changing conditions without providing for excessive capability in transmission and storage of sensor data. Accordingly, operations of the distillation column are improved and can be optimized for a large number of operating conditions. Additionally, alerts for the distillation column, based upon recognition of patterns indicating off-nominal operation, can be readily prepared to adjust or shut down the process before significant product quality loss and/or hazardous conditions develop. Example sensor fusion operations for a refinery include vibration information combined with temperatures, pressures, and/or composition (e.g., to determine compressor performance); temperature and pressure, temperature and composition, and/or composition and pressure (e.g., to determine feedstock variance, contact tray performance, and/or a component failure).

**[1098]** An example refinery system includes storage tanks and/or boiler feed water. Example system determinations include a sensor fusion to determine a storage tank failure and/or off-nominal operation, such as through a temperature and pressure fusion, and/or a vibration determination with a non-vibration determination (e.g., detecting leaks, air in the system, and/or a feed pump issue). Certain further example system determinations include a sensor fusion to determine a boiler feed water failure, such as through a sensor fusion including flow rate, pressure, temperature, and/or vibration. Any one or more of these parameters can be utilized to determine a system leak, failure, wear of a feed pump, scaling, and/or to reduce pumping losses while maintaining system flow rates. Similarly, an example industrial system includes a power generation system having a condensate and/or make-up water system, where a sensor fusion provides for a sensed parameter group and prediction of failures, maintenance, and the like.

**[1099]** An example industrial system includes an irrigation system for a field or a system of fields. Irrigations systems are subject to significant variability in the system (e.g., inlet pressures and/or water levels, component wear and maintenance) as well as environmental variability (e.g., types and distribution of crops planted, weather, soil moisture, humidity, seasonal variability in the sun, cloud coverage, and/or wind variance). Additionally, irrigation systems tend to be remotely located where high bandwidth network access, maintenance facilities, and/or even personnel for oversight are not readily available. An example system includes a multiplicity of sensors capable of detecting conditions for the irrigation system, without requiring that all of the sensors transmit or store data on a continuous basis. The pattern recognition circuit can readily determine the most important set of sensors to effectively predict patterns and those system conditions requiring a response (e.g., irrigation cycles, positioning, and the like). The sensor learning circuit provides for responsive migration of the sensed parameter group to variability, which may occur on slower (e.g., seasonal, climate change, etc.) or faster cycles (e.g., equipment failure, weather conditions, step change events such as planting or harvesting). Additionally, alerts for remote facilities can be readily prepared with confidence that the correct sensor package is in place for determining an off-nominal condition (e g, imminent failure or maintenance requirement for a pump).

**[1100]** An example industrial system includes a chemical or pharmaceutical plant. Chemical plants require specific operating conditions, flow rates, temperatures, and the like to maintain proper temperatures, concentrations, mixing, and the like throughout the system. In many systems, there are numerous process steps, and an off-nominal or uncoordinated operation in one part of the process can result in reduced yields, a failed process, and/or a significant reduction in production capacity as coordinated processes must respond (or as coordinated processes fail to respond). Accordingly, a very large number of systems are required to minimally define the system, and in certain embodiments a prohibitive number of sensors are required, from a data transmission and storage viewpoint, to keep sensing capability for a broad range of operating conditions. Additionally, the complexity of the system results in difficulty optimizing and coordinating system operations even where sufficient sensors are present. In certain embodiments, the pattern recognition circuit can determine the sensing parameter groups that provide high resolution understanding of the system, without requiring that all of the sensors store and transmit data continuously. Further, the utilization of a sensor fusion provides for the opportunity to abstract desired outputs, for example "maximize yield" or "minimize an undesirable side reaction" without requiring a full understanding from the operator of which sensors and system conditions are most effective to achieve the abstracted desired output. Example components in a chemical or phar-

maceutical plan amenable to control and predictions based on a sensor fusion operation include an agitator, a pressure reactor, a catalytic reactor, and/or a thermic heating system. Example sensor fusion operations to determine sensed parameter groups and tune the pattern recognition circuit include, without limitation, a vibration sensor combined with another sensor type, a composition sensor combined with another sensor type, a flow rate determination combined with another sensor type, and/or a temperature sensor combined with another sensor type. The sensor fusion best suited for a particular application can be converged upon by the sensor learning circuit, but also depends upon the type of component that is subject to predictions, as well as the type of desired outputs pursued by the operator. For example, agitators are amenable to vibration sensing, as well as uniformity of composition detection (e.g., high resolution temperature), expected reaction rates in a properly mixed system, and the like. Catalytic reactors are amenable to temperature sensing (based on the reaction thermodynamics), composition detection (e.g., for expected reactants, as well as direct detection of catalytic material), flow rates (e.g., gross mechanical failure, reduced volume of beads, etc.), and/or pressure detection (e.g., indicative of or coupled with flow rate changes).

**[1101]** An example industrial system includes a food processing system. Example food processing systems include pressurization vessels, stirrers, mixers, and/or thermic heating systems. Control of the process is critical to maintain food safety, product quality, and product consistency. However, most input parameters to the food processing system are subject to high variability—for example basic food products are inherently variable as natural products, with differing water content, protein content, and aesthetic variation. Additionally, labor cost management, power cost management, and variability in supply water, etc., provide for a complex process where determination of the process control variables, sensed parameters to determine these, and optimization of sensing in response to process variation are a difficult problem to resolve. Food processing systems are often cost conscious, and capital costs (e.g., for a robust network and computing system for optimization) are not readily incurred. Further, a food processing system may manufacture a wide variety of products on similar or the same production facilities—for example, to support an entire product line and/or due to seasonal variations. Accordingly, a sensor setup for one process may not support another process well. An example system includes the pattern recognition circuit determining the sensing parameter groups that provide a strong signal response in target outcomes even in light of high variability in system conditions. The pattern recognition circuit can provide for numerous sensed group parameter options available for different process conditions without requiring extensive computing or data storage resources. Additionally, the sensor learning circuit provides for rapid response of the sensing system to changes in the process conditions, including updating the sensed group parameter options to pursue abstracted target outputs without the operator having to understand which sensed parameters best support the output goals. The sensor fusion best suited for a particular application can be converged upon by the sensor learning circuit, but also depends upon the type of component that is subject to predictions, as well as the type of desired outputs pursued by the operator. For example, control of and predictions for pressurization vessels, stirrers, mixers, and/or thermic heating systems are amenable to a sensor fusion with a temperature determination combined with a non-temperature determination, a vibration determination combined with a non-vibration determination, and/or a heat map combined with a rate of change in the heat map and/or a non-heat map determination. An example system includes a sensor fusion with a vibration determination and a non-vibration determination, wherein predictive information for a mixer and/or a stirrer is provided. An example system includes a sensor fusion with a pressure determination, a temperature determination, and/or a non-pressure determination, wherein predictive information for a pressurization vessel is provided.

**[1102]** Referencing FIG. **144**, an example procedure **10936** for data collection in an industrial environment includes an operation **10938** to provide a number of sensors to an industrial system including a number of components, each of the number of sensors operatively coupled to at least one of the number of components. The procedure **10936** further includes an operation **10940** to interpret a number of sensor data values in response to a sensed parameter group, the sensed parameter group including a fused number of sensors from the number of sensors, an operation **10942** to determine a recognized pattern value including a secondary value determined in response to the number of sensor data values, an operation **10944** to update the sensed parameter group in response to the recognized pattern value, and an operation **10946** to adjust the interpreting the number of sensor data values in response to the updated sensed parameter group.

**[1103]** An example procedure **10936** includes an operation to iteratively perform the determining the recognized pattern value and the updating the sensed parameter group to improve a sensing performance value (e.g., by repeating operations **10940** to **10944** periodically, at selected intervals, and/or in response to a system change). An example procedure **10936** includes determining the sensing performance value by determining: a signal-to-noise performance for detecting a value of interest in the industrial system; a network utilization of the plurality of sensors in the industrial system; an effective sensing resolution for a value of interest in the industrial system; a power consumption value for a sensing system in the industrial system, the sensing system including the plurality of sensors; a calculation efficiency for determining the secondary value; an accuracy and/or a precision of the secondary value; a redundancy capacity for determining the secondary value; and/or a lead time value for determining the secondary value.

**[1104]** An example procedure **10936** includes the operation **10944** to update the sensed parameter group by performing at least one operation such as: updating a sensor selection of the sensed parameter group; updating a sensor sampling rate of at least one sensor from the sensed parameter group; updating a sensor resolution of at least one sensor from the sensed parameter group; updating a storage value corresponding to at least one sensor from the sensed parameter group; updating a priority corresponding to at least one sensor from the sensed parameter group; and/or updating at least one of a sampling rate, sampling order, sampling phase, and a network path configuration corresponding to at least one sensor from the sensed parameter group. An example procedure **10936** includes the operation **10942** to determine the recognized pattern value by performing at least one operation such as: determining a signal effectiveness of at

least one sensor of the sensed parameter group and the updated sensed parameter group relative to a value of interest; determining a sensitivity of at least one sensor of the sensed parameter group and the updated sensed parameter group relative to the value of interest; determining a predictive confidence of at least one sensor of the sensed parameter group and the updated sensed parameter group relative to the value of interest; determining a predictive delay time of at least one sensor of the sensed parameter group and the updated sensed parameter group relative to the value of interest; determining a predictive accuracy of at least one sensor of the sensed parameter group and the updated sensed parameter group relative to the value of interest; determining a predictive precision of at least one sensor of the sensed parameter group and the updated sensed parameter group relative to the value of interest; and/or updating the recognized pattern value in response to external feedback.

**[1105]** Clause 1. In embodiments, a system for data collection in an industrial environment, the system comprising: an industrial system comprising a plurality of components, and a plurality of sensors each operatively coupled to at least one of the plurality of components; a sensor communication circuit structured to interpret a plurality of sensor data values in response to a sensed parameter group; a pattern recognition circuit structured to determine a recognized pattern value in response to a least a portion of the plurality of sensor data values; and a sensor learning circuit structured to update the sensed parameter group in response to the recognized pattern value; wherein the sensor communication circuit is further structured to adjust the interpreting of the plurality of sensor data values in response to the updated sensed parameter group. 2. The system of clause 1, wherein the sensed parameter group comprises a fused plurality of sensors, and wherein the recognized pattern value further includes a secondary value comprising a value determined in response to the fused plurality of sensors. 3. The system of clause 2, wherein the pattern recognition circuit and sensor learning circuit are further structured to iteratively perform the determining the recognized pattern value and the updating the sensed parameter group to improve a sensing performance value. 4. The system of clause 3, wherein the sensing performance value comprises at least one performance determination selected from the performance determinations consisting of: a signal-to-noise performance for detecting a value of interest in the industrial system; a network utilization of the plurality of sensors in the industrial system; an effective sensing resolution for a value of interest in the industrial system; and a power consumption value for a sensing system in the industrial system, the sensing system including the plurality of sensors. 5. The system of clause 3, wherein the sensing performance value comprises a signal-to-noise performance for detecting a value of interest in the industrial system. 6. The system of clause 3, wherein the sensing performance value comprises a network utilization of the plurality of sensors in the industrial system. 7. The system of clause 3, wherein the sensing performance value comprises an effective sensing resolution for a value of interest in the industrial system. 8. The system of clause 3, wherein the sensing performance value comprises a power consumption value for a sensing system in the industrial system, the sensing system including the plurality of sensors. 9. The system of clause 3, wherein the sensing performance value comprises a calculation efficiency for determining the secondary value. 10 The system of clause 9, wherein the calculation efficiency comprises at least one of: processor operations to determine the secondary value, memory utilization for determining the secondary value, a number of sensor inputs from the plurality of sensors for determining the secondary value, and supporting data long-term storage for supporting the secondary value. 11. The system of clause 3, wherein the sensing performance value comprises one of an accuracy and a precision of the secondary value. 12. The system of clause 3, wherein the sensing performance value comprises a redundancy capacity for determining the secondary value. 13. The system of clause 3, wherein the sensing performance value comprises a lead time value for determining the secondary value. 14. The system of clause 13, wherein the secondary value comprises a component overtemperature value. 15. The system of clause 13, wherein the secondary value comprises one of a component maintenance time, a component failure time, and a component service life. 16. The system of clause 13, wherein the secondary value comprises an off nominal operating condition affecting a product quality produced by an operation of the industrial system. 17. The system of clause 1, wherein the plurality of sensors comprises at least one analog sensor. 18. The system of clause 1, wherein at least one of the sensors comprises a remote sensor. 19. The system of clause 2, wherein the secondary value comprises at least one value selected from the values consisting of: a virtual sensor output value; a process prediction value; a process state value; a component prediction value; a component state value; and a model output value having the sensor data values from the fused plurality of sensors as an input. 20. The system of clause 2, wherein the fused plurality of sensors further comprises at least one pairing of sensor types selected from the pairings consisting of: a vibration sensor and a temperature sensor; a vibration sensor and a pressure sensor; a vibration sensor and an electric field sensor; a vibration sensor and a heat flux sensor; a vibration sensor and a galvanic sensor; and a vibration sensor and a magnetic sensor. 21. The system of clause 1, wherein the sensor learning circuit is further structured to update the sensed parameter group by performing at least one operation selected from the operations consisting of: updating a sensor selection of the sensed parameter group; updating a sensor sampling rate of at least one sensor from the sensed parameter group; updating a sensor resolution of at least one sensor from the sensed parameter group; updating a storage value corresponding to at least one sensor from the sensed parameter group; updating a priority corresponding to at least one sensor from the sensed parameter group; and updating at least one of a sampling rate, sampling order, sampling phase, and a network path configuration corresponding to at least one sensor from the sensed parameter group. 22. The system of clause 21, wherein the pattern recognition circuit is further structured to determine the recognized pattern value by performing at least one operation selected from the operations consisting of: determining a signal effectiveness of at least one sensor of the sensed parameter group and the updated sensed parameter group relative to a value of interest; determining a sensitivity of at least one sensor of the sensed parameter group and the updated sensed parameter group relative to the value of interest; determining a predictive confidence of at least one sensor of the sensed parameter group and the updated sensed parameter group relative to the value of interest; determining a predictive

delay time of at least one sensor of the sensed parameter group and the updated sensed parameter group relative to the value of interest; determining a predictive accuracy of at least one sensor of the sensed parameter group and the updated sensed parameter group relative to the value of interest; determining a predictive precision of at least one sensor of the sensed parameter group and the updated sensed parameter group relative to the value of interest; and updating the recognized pattern value in response to external feedback. 23. The system of clause 22, wherein the value of interest comprises at least one value selected from the values consisting of: a virtual sensor output value; a process prediction value; a process state value; a component prediction value; a component state value; and a model output value having the sensor data values from the fused plurality of sensors as an input. 24. The system of clause 2, wherein the pattern recognition circuit is further structured to access cloud-based data comprising a second plurality of sensor data values, the second plurality of sensor data values corresponding to at least one offset industrial system. 25. The system of clause 24, wherein the sensor learning circuit is further structured to access the cloud-based data comprising a second updated sensor parameter group corresponding to the at least one offset industrial system. 26. A method, comprising: providing a plurality of sensors to an industrial system comprising a plurality of components, each of the plurality of sensors operatively coupled to at least one of the plurality of components; interpreting a plurality of sensor data values in response to a sensed parameter group, the sensed parameter group comprising a fused plurality of sensors from the plurality of sensors; determining a recognized pattern value comprising a secondary value determined in response to the plurality of sensor data values; updating the sensed parameter group in response to the recognized pattern value; and adjusting the interpreting the plurality of sensor data values in response to the updated sensed parameter group. 27. The method of clause 26, further comprising iteratively performing the determining the recognized pattern value and the updating the sensed parameter group to improve a sensing performance value. 28. The method of clause 27, further comprising determining the sensing performance value in response to determining at least one of: a signal-to-noise performance for detecting a value of interest in the industrial system; a network utilization of the plurality of sensors in the industrial system;

**[1106]** an effective sensing resolution for a value of interest in the industrial system; a power consumption value for a sensing system in the industrial system, the sensing system including the plurality of sensors; a calculation efficiency for determining the secondary value, wherein the calculation efficiency comprises at least one of: processor operations to determine the secondary value, memory utilization for determining the secondary value, a number of sensor inputs from the plurality of sensors for determining the secondary value, and supporting data long-term storage for supporting the secondary value; one of an accuracy and a precision of the secondary value; a redundancy capacity for determining the secondary value; and a lead time value for determining the secondary value. 29. The method of clause 27, wherein updating the sensed parameter group comprises performing at least one operation selected from the operations consisting of: updating a sensor selection of the sensed parameter group; updating a sensor sampling rate of at least one sensor from the sensed parameter group; updating a sensor resolution of at least one sensor from the sensed parameter group; updating a storage value corresponding to at least one sensor from the sensed parameter group; updating a priority corresponding to at least one sensor from the sensed parameter group; and updating at least one of a sampling rate, sampling order, sampling phase, and a network path configuration corresponding to at least one sensor from the sensed parameter group. 30. The method of clause 27, wherein determining the recognized pattern value comprises performing at least one operation selected from the operations consisting of: determining a signal effectiveness of at least one sensor of the sensed parameter group and the updated sensed parameter group relative to a value of interest; determining a sensitivity of at least one sensor of the sensed parameter group and the updated sensed parameter group relative to the value of interest; determining a predictive confidence of at least one sensor of the sensed parameter group and the updated sensed parameter group relative to the value of interest; determining a predictive delay time of at least one sensor of the sensed parameter group and the updated sensed parameter group relative to the value of interest; determining a predictive accuracy of at least one sensor of the sensed parameter group and the updated sensed parameter group relative to the value of interest; determining a predictive precision of at least one sensor of the sensed parameter group and the updated sensed parameter group relative to the value of interest; and updating the recognized pattern value in response to external feedback. 31. A system for data collection in an industrial environment, the system comprising: an industrial system comprising a plurality of components, and a plurality of sensors each operatively coupled to at least one of the plurality of components; a sensor communication circuit structured to interpret a plurality of sensor data values in response to a sensed parameter group, wherein the sensed parameter group comprises a fused plurality of sensors; a means for recognizing a pattern value in response to the sensed parameter group; and a means for updating the sensed parameter group in response to the recognized pattern value. 32. The system of clause 31, further comprising a means for iteratively updating the sensed parameter group. 33. The system of clause 32, further comprising a means for accessing at least one of external data and a second plurality of sensor data values corresponding to an offset industrial system, and wherein the means for iteratively updating the sensed parameter group is further responsive to the at least one of external data and the second plurality of sensor data values. 34. The system of clause 33, further comprising a means for accessing a second sensed parameter group corresponding to the offset industrial system, and wherein the means for iteratively updating is further responsive to the second sensed parameter group. 35. A system for data collection in an industrial environment, the system comprising: an industrial system comprising a plurality of components, and a plurality of sensors each operatively coupled to at least one of the plurality of components; a sensor communication circuit structured to interpret a plurality of sensor data values in response to a sensed parameter group; a pattern recognition circuit structured to determine a recognized pattern value in response to a least a portion of the plurality of sensor data values, wherein the recognized pattern value includes a secondary value comprising a value determined in response to the at least a portion of the plurality of sensors; a sensor learning circuit structured to update the sensed parameter group in

response to the recognized pattern value; wherein the sensor communication circuit is further structured to adjust the interpreting the plurality of sensor data values in response to the updated sensed parameter group; and wherein the pattern recognition circuit and the sensor learning circuit are further structured to iteratively perform the determining the recognized pattern value and the updating the sensed parameter group to improve a sensing performance value, wherein the sensing performance value comprises a signal-to-noise performance for detecting a value of interest in the industrial system. 36. The system of clause 35, wherein the sensed parameter group comprises a fused plurality of sensors, and wherein the secondary value comprises a value determined in response to the fused plurality of sensors. 37. The system of clause 36, wherein the secondary value comprises at least one value selected from the values consisting of: a virtual sensor output value; a process prediction value; a process state value; a component prediction value; a component state value; and a model output value having the sensor data values from the fused plurality of sensors as an input. 38. A system for data collection in an industrial environment, the system comprising: an industrial system comprising a plurality of components, and a plurality of sensors each operatively coupled to at least one of the plurality of components; a sensor communication circuit structured to interpret a plurality of sensor data values in response to a sensed parameter group; a pattern recognition circuit structured to determine a recognized pattern value in response to a least a portion of the plurality of sensor data values, wherein the recognized pattern value includes a secondary value comprising a value determined in response to the at least a portion of the plurality of sensors; a sensor learning circuit structured to update the sensed parameter group in response to the recognized pattern value; wherein the sensor communication circuit is further structured to adjust the interpreting the plurality of sensor data values in response to the updated sensed parameter group; and wherein the pattern recognition circuit and the sensor learning circuit are further structured to iteratively perform the determining the recognized pattern value and the updating the sensed parameter group to improve a sensing performance value, wherein the sensing performance value comprises a network utilization of the plurality of sensors in the industrial system. 39. The system of clause 37, wherein the sensed parameter group comprises a fused plurality of sensors, and wherein the secondary value comprises a value determined in response to the fused plurality of sensors. 40. The system of clause 39, wherein the secondary value comprises at least one value selected from the values consisting of: a virtual sensor output value; a process prediction value; a process state value; a component prediction value; a component state value; and a model output value having the sensor data values from the fused plurality of sensors as an input. 41. A system for data collection in an industrial environment, the system comprising: an industrial system comprising a plurality of components, and a plurality of sensors each operatively coupled to at least one of the plurality of components; a sensor communication circuit structured to interpret a plurality of sensor data values in response to a sensed parameter group; a pattern recognition circuit structured to determine a recognized pattern value in response to a least a portion of the plurality of sensor data values, wherein the recognized pattern value includes a secondary value comprising a value determined in response to the at least a portion of the plurality of sensors; a sensor learning circuit structured to update the sensed parameter group in response to the recognized pattern value; wherein the sensor communication circuit is further structured to adjust the interpreting the plurality of sensor data values in response to the updated sensed parameter group; and wherein the pattern recognition circuit and the sensor learning circuit are further structured to iteratively perform the determining the recognized pattern value and the updating the sensed parameter group to improve a sensing performance value, wherein the sensing performance value comprises an effective sensing resolution for a value of interest in the industrial system. 42. The system of clause 41, wherein the sensed parameter group comprises a fused plurality of sensors, and wherein the secondary value comprises a value determined in response to the fused plurality of sensors. 43. The system of clause 42, wherein the secondary value comprises at least one value selected from the values consisting of: a virtual sensor output value; a process prediction value; a process state value; a component prediction value; a component state value; and a model output value having the sensor data values from the fused plurality of sensors as an input. 44. A system for data collection in an industrial environment, the system comprising: an industrial system comprising a plurality of components, and a plurality of sensors each operatively coupled to at least one of the plurality of components; a sensor communication circuit structured to interpret a plurality of sensor data values in response to a sensed parameter group; a pattern recognition circuit structured to determine a recognized pattern value in response to a least a portion of the plurality of sensor data values, wherein the recognized pattern value includes a secondary value comprising a value determined in response to the at least a portion of the plurality of sensors; a sensor learning circuit structured to update the sensed parameter group in response to the recognized pattern value; wherein the sensor communication circuit is further structured to adjust the interpreting the plurality of sensor data values in response to the updated sensed parameter group; and wherein the pattern recognition circuit and the sensor learning circuit are further structured to iteratively perform the determining the recognized pattern value and the updating the sensed parameter group to improve a sensing performance value, wherein the sensing performance value comprises a power consumption value for a sensing system in the industrial system, the sensing system including the plurality of sensors. 45. The system of clause 44, wherein the sensed parameter group comprises a fused plurality of sensors, and wherein the secondary value comprises a value determined in response to the fused plurality of sensors. 46. The system of clause 45, wherein the secondary value comprises at least one value selected from the values consisting of: a virtual sensor output value; a process prediction value; a process state value; a component prediction value; a component state value; and a model output value having the sensor data values from the fused plurality of sensors as an input.

**[1107]** Referencing FIG. **145**, an example system **11000** for data collection in an industrial environment includes an industrial system **11002** having a number of components **11004**, and a number of sensors **11006** each operatively coupled to at least one of the number of components **11004**. The selection, distribution, type, and communicative setup of sensors depends upon the application of the system **11000** and/or the context.

**[1108]** The example system **11000** further includes a sensor communication circuit **11018** (reference FIG. **146**) that interprets a number of sensor data values **11034** in response to a sensed parameter group **11026**. The sensed parameter group **11026** includes a description of which sensors **11006** are sampled at which times, including at least the selected sampling frequency, a process stage wherein a particular sensor may be providing a value of interest, and the like. An example system includes the sensed parameter group **11026** being a number of sensors provided for a sensor fusion operation. In certain embodiments, the sensed parameter group **11026** includes a set of sensors that encompass detection of operating conditions of the system that predict outcomes, off-nominal operations, maintenance intervals, maintenance health states, and/or future state values for any of these, for a process, a component, a sensor, and/or any aspect of interest for the system **11000**.

**[1109]** In certain embodiments, sensor data values **11034** are provided to a data collector **11008**, which may be in communication with multiple sensors **11006** and/or with a controller **11012**. In certain embodiments, a plant computer **11010** is additionally or alternatively present. In the example system, the controller **11012** is structured to functionally execute operations of the sensor communication circuit **11018**, pattern recognition circuit **11020**, and/or the system characterization circuit **11022**, and is depicted as a separate device for clarity of description. Aspects of the controller **11012** may be present on the sensors **11006**, the data collector **11008**, the plant computer **11010**, and/or on a cloud computing device **11014**. In certain embodiments, all aspects of the controller **11012** may be present in another device depicted on the system **11000**. The plant computer **11010** represents local computing resources, for example processing, memory, and/or network resources, that may be present and/or in communication with the industrial system **11000**. In certain embodiments, the cloud computing device **11014** represents computing resources externally available to the industrial system **11000**, for example over a private network, intra-net, through cellular communications, satellite communications, and/or over the internet. In certain embodiments, the data collector **11008** may be a computing device, a smart sensor, a MUX box, or other data collection device capable to receive data from multiple sensors and to pass-through the data and/or store data for later transmission. An example data collector **11008** has no storage and/or limited storage, and selectively passes sensor data therethrough, with a subset of the sensor data being communicated at a given time due to bandwidth considerations of the data collector **11008**, a related network, and/or imposed by environmental constraints. In certain embodiments, one or more sensors and/or computing devices in the system **11000** are portable devices—for example a plant operator walking through the industrial system may have a smart phone, which the system **11000** may selectively utilize as a data collector **11008**, sensor **11006**—for example to enhance communication throughput, sensor resolution, and/or as a primary method for communicating sensor data values **11034** to the controller **11012**.

**[1110]** The example system **11000** further includes a pattern recognition circuit **11020** that determines a recognized pattern value **11028** in response to a least a portion of the sensor data values **11034**, and a system characterization circuit **11022** that provides a system characterization value **11030** for the industrial system in response to the recognized pattern value **11028**. The system characterization value **11030** includes any value determined from the pattern recognition operations of the pattern recognition circuit **11020**, including determining that a system condition of interest is present, a component condition of interest is present, an abstracted condition of the system or a component is present (e.g., a product quality value; an operation cost value; a component health, wear, or maintenance value; a component capacity value; and/or a sensor saturation value) and/or is predicted to occur within a time frame (e.g., calendar time, operational time, and/or a process stage) of interest. Pattern recognition operations include determining that operations compatible with a previously known pattern, operations similar to a previously known pattern and/or extrapolated from previously known pattern information (e.g., a previously known pattern includes a temperature response for a first component, and a known or estimated relationship between components allows for a determination that a temperature for a second component will exceed a threshold based upon the pattern recognition for the first component combined with the known or estimated relationship).

**[1111]** Non-limiting descriptions of a number of examples of a system characterization value **11030** are described following. An example system characterization value **11030** includes a predicted outcome for a process associated with the industrial system—for example a product quality description, a product quantity description, a product variability description (e.g., the expected variability of a product parameter predicted according to the operating conditions of the system), a product yield description, a net present value (NPV) for a process, a process completion time, a process chance of completion success, and/or a product purity result. The predicted outcome may be a batch prediction (e.g., a single run, or an integer number of runs, of the process, and the associated predicted outcome), a time based prediction (e.g., the projected outcome of the process over the next day, the next three weeks, until a scheduled shutdown, etc.), a production defined prediction (e.g., the projected outcome over the next 1,000 units, over the next 47 orders, etc.), and/or a rate of change based outcome (e.g., projected for 3 component failures per month, an emissions output per year, etc.). An example system characterization value **11030** includes a predicted future state for a process associated with the industrial system—for example an operating temperature at a given future time, an energy consumption value, a volume in a tank, an emitted noise value at a school adjacent to the industrial system, and/or a rotational speed of a pump. The predicted future state may be time based (e.g., at 4 PM on Thursday), based on a state of the process (e.g., during the third stage, during system shutdown, etc.), and/or based on a future state of particular interest (e.g., peak energy consumption, highest temperature value, maximum noise value, time or process stage when a maximum number of personnel will be within 50 feet of a sensitive area, time or process stage when an aspect of the system redundancy is at a lowest point—e.g., for determining high risk points in a process, etc.). An example system characterization value **11030** includes a predicted off-nominal operation for the process associated with the industrial system—for example when a component capacity of the system will exceed nominal parameters (although, possibly, not experience a failure), when any parameter in the system will be three standard deviations away from normal operations, when a

capacity of a component will be under-utilized, etc. An example system characterization value **11030** includes a prediction value for one of the number of components—for example an operating condition at a point in time and/or process stage. An example system characterization value **11030** includes a future state value for one of the number of components. The predicted future state of a component may be time based, based on a state of the process, and/or based on a future state of particular interest (e.g., a highest or lowest value predicted for the component). An example system characterization value **11030** includes an anticipated maintenance health state information for one of the number of components, including at a particular time, a process stage, a lowest value predicted until a next maintenance event, etc. An example system characterization value **11030** includes a predicted maintenance interval for at least one of the number of components (e.g., based on current usage, anticipated usage, planned process operations, etc.). An example system characterization value **11030** includes a predicted off-nominal operation for one of the number of components—for example at a selected time, a process stage, and/or a future state of particular interest. An example system characterization value **11030** includes a predicted fault operation for one of the plurality of components—for example at a selected time, a process stage, any fault occurrence predicted based on current usage, anticipated usage, planned process operations, and/or a future state of particular interest. An example system characterization value **11030** includes a predicted exceedance value for one of the number of components, where the exceedance value includes exceedance of a design specification, and/or exceedance of a selected threshold. An example system characterization value **11030** includes a predicted saturation value for one of the plurality of sensors for example at a selected time, a process stage, any saturation occurrence predicted based on current usage, anticipated usage, planned process operations, and/or a future state of particular interest.

**[1112]** Any values for the prediction value **11030** may be raw values (e.g., a temperature value), derivative values (e.g., a rate of change of a temperature value), accumulated values (e.g., a time spent above one or more temperature thresholds) including weighted accumulated values, and/or integrated values (e.g., an area over a temperature-time curve at a temperature value or temperature trajectory of interest). The provided examples list temperature, but any prediction value **11030** may be utilized, including at least vibration, system throughput, pressure, etc. In certain embodiments, combinations of one or more prediction values **11030** may be utilized.

**[1113]** It will be appreciated in light of the disclosure that combining prediction values **11030** can create particularly powerful combinations for system analysis, control, and risk management, which are specifically contemplated herein. For example, a first prediction value may indicate a time or process stage for a maximum flow rate through the system, and a second prediction value may determine the predicted state of one or more components of the system that is present at that particular time or process stage. In another example, a first prediction value indicates a lowest margin of the system in terms of capacity to deliver (e.g., by determining a point in the process wherein at least one component has a lowest operating margin, and/or where a group of components have a statistically lower operating margin due to the risk induced by a number of simultaneous low operating margins), and a second prediction value testing a system risk (e.g., loss of inlet water, loss of power, increase in temperature, change in environmental conditions that reduce or increase heat transfer, or that preclude the emission of certain effluents), and the combined risk of separate events can be assessed on the total system risk. Additionally, the prediction values may be operated with a sensitivity check (e.g., varying system conditions within margins to determine if some failure may occur), wherein the use of the prediction value allows for the sensitivity check to be performed with higher resolution at high risk points in the process.

**[1114]** An example system **11000** further includes a system collaboration circuit **11024** that interprets external data **11036**, and where the pattern recognition circuit **11020** further determines the recognized pattern value **11028** further in response to the external data **11036**. External data **11036** includes, without limitation, data provided from outside the system **11000** and/or outside the controller **11012**. Non-limiting example external data **11036** include entries from an operator (e.g., indicating a failure, a fault, and/or a service event). An example pattern recognition circuit **11020** further iteratively improves pattern recognition operations in response to the external data **11036** (e.g., where an outcome is known, such as a maintenance event, product quality determination, production outcome determination, etc., the detection of the recognized pattern value **11028** is thereby improved according to the conditions of the system before the known outcome occurred). Example and non-limiting external data **11036** includes data such as: an indicated process success value; an indicated process failure value; an indicated component maintenance event; an indicated component failure event; an indicated process outcome value; an indicated component wear value; an indicated process operational exceedance value; an indicated component operational exceedance value; an indicated fault value; and/or an indicated sensor saturation value.

**[1115]** An example system **11000** further includes a system collaboration circuit **11024** that interprets cloud-based data **11032** including a second number of sensor data values, the second number of sensor data values corresponding to at least one offset industrial system, and where the pattern recognition circuit **11020** further determines the recognized pattern value **11028** further in response to the cloud-based data **11032**. An example pattern recognition circuit **11020** further iteratively improves pattern recognition operations in response to the cloud-based data **11032**. An example sensed parameter group **11026** includes a triaxial vibration sensor, a vibration sensor and a second sensor that is not a vibration sensor, the second sensor being a digital sensor, and/or a number of analog sensors.

**[1116]** An example system includes an industrial system including an oil refinery. An example oil refinery includes one or more compressors for transferring fluids throughout the plant, and/or for pressurizing fluid streams (e.g., for reflux in a distillation column). Additionally, or alternatively, the example oil refinery includes vacuum distillation, for example to fractionate hydrocarbons. The example oil refinery additionally includes various pipelines in the system for transferring fluids, bringing in feedstock, final product delivery, and the like. An example system includes a number of sensors configured to determine each aspect of a distillation column—for example temperatures of various fluid streams, temperatures, and compositions of individual contact trays in the column, measurements of the feed and

reflux, as well as of the effluent or separated products. The design of a distillation column is complex, and optimal design can depend upon the sizing of boilers, compressors, the contact conditions within the column, as well as the composition of feedstock, which can vary significantly. Additionally, the optimal position for effective sensing of conditions in a pipeline can vary with fluid flow rates, environmental conditions (e.g., causing variation in heat transfer rates), the feedstock utilized, and other factors. Additionally, wear or loss of capability in a boiler, compressor, or other operating equipment can change the system response and capabilities, rendering a single point optimization, including where sensors should be positioned and how they should sample data, to be non-optimal as the system ages.

**[1117]** Provision of multiple sensors throughout the system can be costly, not necessarily because the sensors are expensive, but because the sensors provide data that may be prohibitive to transmit, store, and utilize. The example system includes providing a large number of sensors throughout the system, and predicting the future states of components, process variables, products, and/or emissions for the system. The example system utilizes a pattern recognition circuit to determine not only the future predicted state of parameters, but when the future predicted state of parameters will be of interest, and/or will combine with other future predicted state of parameters to create additional risks or opportunities.

**[1118]** Additionally, the system characterization circuit and the system collaboration circuit can improve predictions and/or system characterizations over time, and/or utilizing offset oil refineries, to more robustly make predictions or system characterizations, which can provide for earlier detection, longer term planning for overall enterprise optimization, and/or to allow the industrial system to operate closer to margins. If an unexpected operating condition occurs—for example an off-nominal operation of a compressor, the sensor collaboration circuit is able to migrate the system prediction and improve the capability to detect the conditions that caused the unexpected operating condition in the system, and/or in offset systems. Additionally, alerts for the distillation column, based upon predictions indicating off-nominal operation, marginal operation, high risk operation, and/or upcoming maintenance or potential failures, can be readily prepared to provide visibility to risks that otherwise may not be apparent by simply looking at system capacities and past experience without rigorous analysis.

**[1119]** Example sensor fusion operations for a refinery include vibration information combined with temperatures, pressures, and/or composition (e.g., to determine compressor performance); temperature and pressure, temperature and composition, and/or composition, and pressure (e.g., to determine feedstock variance, contact tray performance, and/or a component failure).

**[1120]** An example refinery system includes storage tanks and/or boiler feed water. Example system determinations include a sensor fusion to determine a storage tank failure and/or off-nominal operation, such as through a temperature and pressure fusion, and/or a vibration determination with a non-vibration determination (e.g., detecting leaks, air in the system, and/or a feed pump issue). Certain further example system predictions include a sensor fusion to determine a boiler feed water failure, such as through a sensor fusion including flow rate, pressure, temperature, and/or vibration. Any one or more of these parameters can be utilized to predict a system leak, failure, wear of a feed pump, and/or scaling.

**[1121]** Similarly, an example industrial system includes a power generation system having a condensate and/or make-up water system, where a sensor fusion provides for a sensed parameter group and prediction of failures, maintenance, and the like. The system characterization circuit, utilizing sensor fusion and/or a continuous machine learning process, can predict failures, off-nominal operations, component health, and/or maintenance events for, without limitation, compressors, piping, storage tanks, and/or boiler feed water for an oil refinery.

**[1122]** An example industrial system includes an irrigation system for a field or a system of fields. Irrigations systems are subject to significant variability in the system (e.g., inlet pressures and/or water levels, component wear and maintenance) as well as environmental variability (e.g., types and distribution of crops planted, weather, soil moisture, humidity, seasonal variability in the sun, cloud coverage, and/or wind variance). Additionally, irrigation systems tend to be remotely located where high bandwidth network access, maintenance facilities, and/or even personnel for oversight are not readily available. An example system includes a multiplicity of sensors capable to enable prediction of conditions for the irrigation system, without requiring that all of the sensors transmit or store data on a continuous basis. The pattern recognition circuit can readily determine the most important set of sensors to effectively predict patterns and thus system conditions requiring a response (e.g., irrigation cycles, positioning, and the like). Additionally, alerts for remote facilities can be readily prepared, with confidence that the correct sensor package is in place for predicting an off-nominal condition (e.g., imminent failure or maintenance requirement for a pump). In certain embodiments, the system may determine an off-nominal process condition such as water feed availability being below normal (e.g., based upon recognized pattern conditions such as recent precipitation history, water production history from the irrigation system or other systems competing for the same water feed), structured news alerts or external data, etc., and update the sensed parameter group, for example to confirm the water feed availability (e.g., a water level sensor in a relevant location), to confirm that acceptable conditions are available that water delivery levels can be dropped (e.g., a humidity sensor, and/or a prompt to a user), and/or to confirm that sufficient available secondary sources are available (e.g., an auxiliary water level sensor).

**[1123]** An example industrial system includes a chemical or pharmaceutical plant. Chemical plants require specific operating conditions, flow rates, temperatures, and the like to maintain proper temperatures, concentrations, mixing, and the like throughout the system. In many systems, there are numerous process steps, and an off-nominal or uncoordinated operation in one part of the process can result in reduced yields, a failed process, and/or a significant reduction in production capacity as coordinated processes must respond (or as coordinated processes fail to respond). Accordingly, a very large number of systems are required to minimally define the system, and in certain embodiments a prohibitive number of sensors are required, from a data transmission and storage viewpoint, to keep sensing capability for a broad range of operating conditions. Additionally, the complexity of the system results in difficulty

optimizing and coordinating system operations even where sufficient sensors are present. In certain embodiments, the pattern recognition circuit can predict the sensing parameter groups that provide high resolution understanding of the system, without requiring that all of the sensors store and transmit data continuously. Further, the pattern recognition circuit can highlight the predicted system risks and capacity limitations for upcoming process operations, where the risks are buried in the complex process. Accordingly, this means it can confidently be operated closer to margins, at a lower cost, and/or maintenance or system upgrades can be performed before failures or capacity limitations are experienced.

**[1124]** Further, the utilization of a sensor fusion provides for the opportunity to abstract desired predictions, such as "maximize quality" or "minimize and undesirable side reaction" without requiring a full understanding from the operator of which sensors and system conditions are most effective to achieve the abstracted desired output. Further, the predictive nature of the pattern recognition circuit allows for changes in the process to support the desired outcome to be implemented before the process is committed to a sub-optimal outcome. Example components in a chemical or pharmaceutical plan amenable to control and predictions based on operations of the pattern recognition circuit and/or a sensor fusion operation include an agitator, a pressure reactor, a catalytic reactor, and/or a thermic heating system. Example sensor fusion operations to determine sensed parameter groups and tune the pattern recognition circuit include, without limitation, a vibration sensor combined with another sensor type, a composition sensor combined with another sensor type, a flow rate determination combined with another sensor type, and/or a temperature sensor combined with another sensor type. For example, agitators are amenable to vibration sensing, as well as uniformity of composition detection (e.g., high resolution temperature), expected reaction rates in a properly mixed system, and the like. Catalytic reactors are amenable to temperature sensing (based on the reaction thermodynamics), composition detection (e.g., for expected reactants, as well as direct detection of catalytic material), flow rates (e.g., gross mechanical failure, reduced volume of beads, etc.), and/or pressure detection (e.g., indicative of or coupled with flow rate changes).

**[1125]** An example industrial system includes a food processing system. Example food processing systems include pressurization vessels, stirrers, mixers, and/or thermic heating systems. Control of the process is critical to maintain food safety, product quality, and product consistency. However, most input parameters to the food processing system are subject to high variability—for example basic food products are inherently variable as natural products, with differing water content, protein content, and other aesthetic variation. Additionally, labor cost management, power cost management, and variability in supply water, etc., provide for a complex process where determination of the predictive variables, sensed parameters to determine these, and optimization of predicting in response to process variation are a difficult problem to resolve. Food processing systems are often cost conscious, and capital costs (e.g., for a robust network and computing system for optimization) are not readily incurred. Further, a food processing system may manufacture wide variance of products on similar or the same production facilities, for example to support an entire product line and/or due to seasonal variations, and accordingly a predictive operation for one process may not support another process well. Example systems include the pattern recognition circuit determining the sensing parameter groups that provide a strong signal response in target outcomes even in light of high variability in system conditions. The pattern recognition circuit can provide for numerous sensed group parameter options available for different process conditions without requiring extensive computing or data storage resources, and accordingly achieve relevant predictions for a wide variety of operating conditions. For example, control of and predictions for pressurization vessels, stirrers, mixers, and/or thermic heating systems are amenable to operations of the pattern recognition circuit, and/or a sensor fusion with a temperature determination combined with a non-temperature determination, a vibration determination combined with a non-vibration determination, and/or a heat map combined with a rate of change in the heat map and/or a non-heat map determination. An example system includes a pattern recognition circuit operation and/or a sensor fusion with a vibration determination and a non-vibration determination, wherein predictive information for a mixer and/or a stirrer is provided; and/or with a pressure determination, a temperature determination, and/or a non-pressure determination, wherein predictive information for a pressurization vessel is provided.

**[1126]** Referencing FIG. **147**, an example procedure **11038** includes an operation **11040** to provide a number of sensors to an industrial system including a number of components, each of the number of sensors operatively coupled to at least one of the number of components, an operation **11042** to interpret a number of sensor data values in response to a sensed parameter group, the sensed parameter group including at least one sensor of the number of sensors, an operation **11044** to determine a recognized pattern value in response to a least a portion of the number of sensor data values, and an operation **11046** to provide a system characterization value for the industrial system in response to the recognized pattern value.

**[1127]** An example procedure **11038** further includes the operation **11046** to provide the system characterization value by performing an operation such as: determining a predicted outcome for a process associated with the industrial system; determining a predicted future state for a process associated with the industrial system; determining a predicted off-nominal operation for the process associated with the industrial system; determining a prediction value for one of the plurality of components; determining a future state value for one of the plurality of components; determining an anticipated maintenance health state information for one of the plurality of components; determining a predicted maintenance interval for at least one of the plurality of components; determining a predicted off-nominal operation for one of the plurality of components; determining a predicted fault operation for one of the plurality of components; determining a predicted exceedance value for one of the plurality of components; and/or determining a predicted saturation value for one of the plurality of sensors.

**[1128]** An example procedure **11038** includes an operation **11050** to interpret external data and/or cloud-based data, and where the operation **11044** to determine the recognized pattern value is further in response to the external data and/or the cloud-based data. An example procedure **11038** includes an operation to iteratively improve pattern recog-

nition operations in response to the external data and/or the cloud-based data, for example by operation **11048** to adjust the operation **11042** interpreting sensor values, such as by updating the sensed parameter group. The operation to iteratively improve pattern recognition may further include repeating operations **11042** through **11048**, periodically, at selected intervals, in response to a system change, and/or in response to a prediction value of a component, process, or the system.

**[1129]** In embodiments, a system for data collection in an industrial environment may comprise: an industrial system comprising a plurality of components, and a plurality of sensors each operatively coupled to at least one of the plurality of components; a sensor communication circuit structured to interpret a plurality of sensor data values in response to a sensed parameter group, the sensed parameter group comprising at least one sensor of the plurality of sensors; a pattern recognition circuit structured to determine a recognized pattern value in response to a least a portion of the plurality of sensor data values; and a system characterization circuit structured to provide a system characterization value for the industrial system in response to the recognized pattern value. In embodiments, a characterization value may include at least one characterization value selected from the characterization values consisting of: a predicted outcome for a process associated with the industrial system; a predicted future state for a process associated with the industrial system; and a predicted off-nominal operation for the process associated with the industrial system. The system characterization value may include at least one characterization value selected from the characterization values consisting of: a prediction value for one of the plurality of components; a future state value for one of the plurality of components; an anticipated maintenance health state information for one of the plurality of components; and a predicted maintenance interval for at least one of the plurality of components. The system characterization value may include at least one characterization value selected from the characterization values consisting of: a predicted off-nominal operation for one of the plurality of components; a predicted fault operation for one of the plurality of components; and a predicted exceedance value for one of the plurality of components. The system characterization value may include a predicted saturation value for one of the plurality of sensors. A system collaboration circuit may be included that is structured to interpret external data, and wherein the pattern recognition circuit is further structured to determine the recognized pattern value further in response to the external data. The pattern recognition circuit may be further structured to iteratively improve pattern recognition operations in response to the external data. The external data may include at least one of: an indicated component maintenance event; an indicated component failure event; an indicated component wear value; an indicated component operational exceedance value; and an indicated fault value. The external data may include at least one of: an indicated process failure value; an indicated process success value; an indicated process outcome value; and an indicated process operational exceedance value. The external data may include an indicated sensor saturation value. A system collaboration circuit may be included that is structured to interpret cloud-based data comprising a second plurality of sensor data values, the second plurality of sensor data values corresponding to at least one offset industrial system, and wherein the pattern recognition circuit is further structured to determine the recognized pattern value further in response to the cloud-based data. The pattern recognition circuit may be further structured to iteratively improve pattern recognition operations in response to the cloud-based data. The sensed parameter group may include a triaxial vibration sensor. The sensed parameter group may include a vibration sensor and a second sensor that is not a vibration sensor, such as where the second sensor comprises a digital sensor. The sensed parameter group may include a plurality of analog sensors.

**[1130]** In embodiments, a method may comprise: providing a plurality of sensors to an industrial system comprising a plurality of components, each of the plurality of sensors operatively coupled to at least one of the plurality of components; interpreting a plurality of sensor data values in response to a sensed parameter group, the sensed parameter group comprising at least one sensor of the plurality of sensors; determining a recognized pattern value in response to a least a portion of the plurality of sensor data values; and providing a system characterization value for the industrial system in response to the recognized pattern value. The system characterization value may be provided by performing at least one operation selected from the operations consisting of: determining a prediction value for one of the plurality of components; determining a future state value for one of the plurality of components; determining an anticipated maintenance health state information for one of the plurality of components; and determining a predicted maintenance interval for at least one of the plurality of components. The system characterization value may be provided by performing at least one operation selected from the operations consisting of: determining a predicted outcome for a process associated with the industrial system; determining a predicted future state for a process associated with the industrial system; and determining a predicted off-nominal operation for the process associated with the industrial system. The system characterization value may be provided by performing at least one operation selected from the operations consisting of: determining a predicted off-nominal operation for one of the plurality of components; determining a predicted fault operation for one of the plurality of components; and determining a predicted exceedance value for one of the plurality of components. The system characterization value may be provided by determining a predicted saturation value for one of the plurality of sensors. Determining the recognized pattern value may be further in response to the external data. Iteratively improving pattern recognition operations may be provided in response to the external data. Interpreting the external data may include at least one operation selected from the operations consisting of: interpreting an indicated component maintenance event; interpreting an indicated component failure event; interpreting an indicated component wear value; interpreting an indicated component operational exceedance value; and interpreting an indicated fault value. Interpreting the external data may include at least one operation selected from the operations consisting of: interpreting an indicated process success value; interpreting an indicated process failure value; interpreting an indicated process outcome value; and interpreting an indicated process operational exceedance value. Interpreting the external data may include interpreting an indicated sensor saturation value. Interpreting cloud-based data may include a second plurality of

sensor data values, the second plurality of sensor data values corresponding to at least one offset industrial system, and wherein determining the recognized pattern value is further in response to the cloud-based data. Iteratively improving pattern recognition operations may be provided in response to the cloud-based data.

**[1131]** In embodiments, a system for data collection in an industrial environment may comprise: an industrial system comprising a plurality of components, and a plurality of sensors each operatively coupled to at least one of the plurality of components; a sensor communication circuit structured to interpret a plurality of sensor data values in response to a sensed parameter group, the sensed parameter group comprising at least one sensor of the plurality of sensors; a means for determining a recognized pattern value in response to at least a portion of the plurality of sensor data values; and a means for providing a system characterization value for the industrial system in response to the recognized pattern value. The means for providing the system characterization value may comprise a means for performing at least one operation selected from the operations consisting of: determining a predicted outcome for a process associated with the industrial system; determining a predicted future state for a process associated with the industrial system; and determining a predicted off-nominal operation for the process associated with the industrial system. The means for providing the system characterization value may include a means for performing at least one operation selected from the operations consisting of: determining a prediction value for one of the plurality of components; determining a future state value for one of the plurality of components; determining an anticipated maintenance health state information for one of the plurality of components; and determining a predicted maintenance interval for at least one of the plurality of components. The means for providing the system characterization value may include a means for performing at least one operation selected from the operations consisting of: determining a predicted off-nominal operation for one of the plurality of components; determining a predicted fault operation for one of the plurality of components; and determining a predicted exceedance value for one of the plurality of components. The means for providing the system characterization value may include a means for determining a predicted saturation value for one of the plurality of sensors. A system collaboration circuit may be provided that is structured to interpret external data, and wherein the means for determining the recognized pattern value determines the recognized pattern value further in response to the external data. A means for iteratively improving pattern recognition operations may be provided in response to the external data. The external data may include at least one of: an indicated process success value; an indicated process failure value; and an indicated process outcome value. The external data may include at least one of: an indicated component maintenance event; an indicated component failure event; and an indicated component wear value. The external data may include at least one of: an indicated process operational exceedance value; an indicated component operational exceedance value; and an indicated fault value. The external data may include an indicated sensor saturation value. A system collaboration circuit may be provided that is structured to interpret cloud-based data comprising a second plurality of sensor data values, the second plurality of sensor data values corresponding to at least one offset industrial system, and wherein the means for determining the recognized pattern value determines the recognized pattern value further in response to the cloud-based data. A means for iteratively improving pattern recognition operations may be provided in response to the cloud-based data.

**[1132]** In embodiments, a system for data collection in an industrial environment may comprise: a distillation column comprising a plurality of components, and a plurality of sensors each operatively coupled to at least one of the plurality of components; a sensor communication circuit structured to interpret a plurality of sensor data values in response to a sensed parameter group, the sensed parameter group comprising at least one sensor of the plurality of sensors; a pattern recognition circuit structured to determine a recognized pattern value in response to a least a portion of the plurality of sensor data values; and a system characterization circuit structured to provide a system characterization value for the distillation column in response to the recognized pattern value. The plurality of components may include a thermodynamic treatment component, and wherein the system characterization value comprises at least one value selected from the values consisting of: determining a prediction value for the thermodynamic treatment component; determining a future state value for the thermodynamic treatment component; determining an anticipated maintenance health state information for the thermodynamic treatment component; and determining a process rate limitation according to a capacity of the thermodynamic treatment component. The thermodynamic treatment component may include at least one of a compressor or a boiler.

**[1133]** In embodiments, a system for data collection in an industrial environment may comprise: a chemical process system comprising a plurality of components, and a plurality of sensors each operatively coupled to at least one of the plurality of components; a sensor communication circuit structured to interpret a plurality of sensor data values in response to a sensed parameter group, the sensed parameter group comprising at least one sensor of the plurality of sensors; a pattern recognition circuit structured to determine a recognized pattern value in response to a least a portion of the plurality of sensor data values; and a system characterization circuit structured to provide a system characterization value for the chemical process system in response to the recognized pattern value. The chemical process system may include one of a chemical plant, a pharmaceutical plant, or an oil refinery. The system characterization value may include at least one value selected from the values consisting of: a separation process value comprising at least one of a capacity value or a purity value; a side reaction process value comprising a side reaction rate value; and a thermodynamic treatment value comprising one of a capability, a capacity, and an anticipated maintenance health for a thermodynamic treatment component.

**[1134]** A system for data collection in an industrial environment, the system comprising:

**[1135]** an irrigation system comprising a plurality of components including a pump, and a plurality of sensors each operatively coupled to at least one of the plurality of components; a sensor communication circuit structured to interpret a plurality of sensor data values in response to a sensed parameter group, the sensed parameter group comprising at least one sensor of the plurality of sensors; a pattern recognition circuit structured to determine a recog-

nized pattern value in response to a least a portion of the plurality of sensor data values; and a system characterization circuit structured to provide a system characterization value for the irrigation system in response to the recognized pattern value. The system characterization value may include at least one of an anticipated maintenance health value for the pump and a future state value for the pump. The pattern recognition circuit may determine an off-nominal process condition in response to the at least a portion of the plurality of sensor data values, and wherein the sensor communication circuit is further structured to change the sensed parameter group in response to the off-nominal process condition. The off-nominal process condition may include an indication of below normal water feed availability, and wherein the updated sensed parameter group comprises at least one sensor selected from the sensors consisting of: a water level sensor, a humidity sensor, and an auxiliary water level sensor.

**[1136]** As described elsewhere herein, feedback to various intelligent and/or expert systems, control systems (including remote and local systems, autonomous systems, and the like), and the like, which may comprise rule-based systems, model-based systems, artificial intelligence (AI) systems (including neural nets, self-organizing systems, and others described throughout this disclosure), and various combinations and hybrids of those (collectively referred to herein as the "expert system" except where context indicates otherwise), may include a wide range of information, including measures such as utilization measures, efficiency measures (e.g., power, financial such as reduction of costs), measures of success in prediction or anticipation of states (e.g., avoidance and mitigation of faults), productivity measures (e.g., workflow), yield measures, profit measures, and the like, as described herein. In embodiments feedback to the expert system may be industry-specific, domain-specific, factory-specific, machine-specific and the like.

**[1137]** Industry-specific feedback for the expert system may be offered by a third party, such as a repair and maintenance organization, manufacturer, one or more consortia, and the like, or may be generated by one or more elements of the subject system itself. Industry-specific feedback may be aggregated, such as into one or more data structures, wherein the data are aggregated at the component level, equipment level, factory/installation level, and/or industry level. Users of the data structure(s) may access data at any level (e.g., component, equipment, factory, industry, etc.) Users may search the data structure(s) for indicators/predictors based on or filtered by system conditions specific to their need, or update an indicator/predictor with proprietary data to customize the data structure to their industry. In embodiments, the expert system may be seeded with industry-specific feedback, such as in a deep learning fashion, to provide an anticipated outcome or state and/or to perform actions to optimize specific machines, devices, components, processes, and the like.

**[1138]** In embodiments, feedback provided to the expert system may be used in one or more smart bands to predict progress towards one or more goals. The expert system may use the feedback to determine a modification, alteration, addition, change, or the like to one or more components of the system that provided the feedback, as described elsewhere herein. Based on the industry-specific feedback, the expert system may alter an input, a way of treating or storing an input or output, a sensor or sensors used to provide feedback, an operating parameter, a piece of equipment used in the system, or any other aspect of the participants in the industrial system that gave rise to the feedback. As described elsewhere herein, the expert system may track multiple goals, such as with one or more smart bands. Industry-specific feedback may be used in or by the smart bands in predicting an outcome or state relating to the one or more goals, and to recommend or instruct a change that is directed in increasing a likelihood of achieving the outcome or state.

**[1139]** For example, a mixer may be used in a food processing environment or in a chemical processing environment, but the feedback that is relevant in the food processing plant (e.g., required sterilization temperatures, food viscosity, particle density (e.g., such as measured by an optical sensor), completion of cooking (e.g., completion of reactions involved in baking), sanitation (e.g., absence of pathogens) may be different than what is relevant in the chemical processing plant (e.g., impeller speed, velocity vectors, flow rate, absence of high contaminant levels, or the like). This industry specific feedback is useful in optimizing the operation of the mixer in its particular environment.

**[1140]** In another example, the expert system may use feedback from agricultural systems to train a model related to an irrigation system deployed in a field, wherein the industry-specific feedback relates to one or more of an amount of water used across the industry (e.g., such as measured by a flowmeter), a trend of water usage over a time period (e.g., such as measured by a flowmeter), a harvest amount (e.g., such as measured by a weight scale), an insect infestation (e.g., such as identified and/or measured by a drone imaging), a plant death (e.g., such as identified and/or measured by drone imaging), and the like.

**[1141]** In another example of a fluid flow system (e.g., fan, pump or compressor) controlling cooling in the manufacturing industry, the expert system may use feedback from manufacturing of components involving materials (e.g., polymers) that require cooling during the manufacturing process, such as one or more of quality of output product, strength of output product, flexibility of output product, and the like (e.g., such as measured by a suite of sensors, including densitometer, viscometer, size exclusion chromatograph, and torque meter). If the sensors indicate that the polymer is cooling too quickly during monomer conversion, the expert system may relay an instruction to one or more of a fan, pump, or compressor in the fluid flow system to decrease an aspect of its operation in order to meet a quality goal.

**[1142]** In another example of a reciprocating compressor operating in a refinery performing refinery processes (e.g., hydrotreating, hydrocracking, isomerization, reforming), the expert system may use feedback related to one or more of an amount of sulfur, nitrogen and/or aromatics downstream of the compressor (e.g., such as measured by a near infrared ("IR") analyzer), the cetane/octane number or smoke point of a product (e.g., such as with an octane analyzer), the density of a product (e.g., such as measured by a densitometer), byproduct gas amounts (e.g., such as measured by an electrochemical gas sensor), and the like. In this example, as feedback is received during isomerization of butane to isobutene by an inline near IR analyzer measuring the amount and/or quality of isobutene, the expert system may determine that the performance of one or more components

of the isomerization system, including the reciprocating compressor, should be altered in order to meet a production goal.

**[1143]** In another example of a vacuum distillation unit operating in a refinery, the expert system may use feedback related to an amount of raw gasoline recovered (e.g., such as by measuring the volume or composition of various fractions using IR), boiling point of recovered fractions (e.g., such as with a boiling point analyzer), a vapor cooling rate (e.g., such as measured by thermometer), and the like. In this example, as feedback is received during vacuum distillation to recover diesel, as the amounts recovered indicate off-nominal rations of production, the expert system may instruct the vacuum distillation unit to alter a feedstock source and initiate more detailed analysis of the prior feedstock.

**[1144]** In yet another example of a pipeline in a refinery, the expert system may use feedback related to flow type (e.g., bubble, stratified, slug, annular, transition, mist) of hydrocarbon products (e.g., such as measured by dye tracing), flow rate, vapor velocity (such as with a flow meter), vapor shear, and the like. In this example, as feedback is received during operation of the pipeline regarding the flow type and its rate, modifications may be recommended by the expert system to improve the flow through the pipeline.

**[1145]** In still another example of a paddle-type or anchor-type agitator/mixer in a pharmaceutical plant, the expert system may use feedback related to degree of mixing of high-viscosity liquids, heating of medium- to low-viscosity liquids, a density of the mixture, a growth rate of an organism in the mixture, and the like. In this example, as feedback is received during operation of the agitator that a bacterial growth rate is too high (such as measured with a spectrophotometer), the expert system may instruct the agitator to reduce its speed to limit the amount of air being added to the mixture or growth substrate.

**[1146]** In a further example of a pressure reactor in a chemical processing plant, the expert system may use feedback related to a catalytic reaction rate (such as measured by a mass spectrometer), a particle density (such as measured by a densitometer), a biological growth rate (such as measured by a spectrophotometer), and the like. In this example, as feedback is received during operation of the pressure reactor that the particle density and biological growth rate are off-nominal, the expert system may instruct the pressure reactor to modify one or more operational parameters, such as a reduction in pressure, an increase in temperature, an increase in volume of the reaction, and the like.

**[1147]** In another example of a gas agitator operating in a chemical processing plant, the expert system may use feedback related to effective density of a gassed liquid, a viscosity, a gas pressure, and the like, as measured by appropriate sensors or equipment. In this example, as feedback is received during operation of the gas agitator, the expert system may instruct the gas agitator to modify one or more operational parameters, such as to increase or decrease a rate of agitation.

**[1148]** In still another example of a pump blasting liquid type agitator in a chemical processing plant, the expert system may use feedback related to a viscosity of a mixture, an optical density of a growth medium, and a temperature of a solution. In this example, as feedback is received during operation of the agitator, the expert system may instruct the agitator to modify one or more operational parameters, such as to increase or decrease a rate of agitation and/or inject additional heat.

**[1149]** In yet another example of a turbine type agitator in a chemical processing plant, the expert system may use feedback related to a vibration noise, a reaction rate of the reactants, a heat transfer, or a density of a suspension. In this example, as feedback is received during operation of the agitator, the expert system may instruct the agitator to modify one or more operational parameters, such as to increase or decrease a rate of agitation and/or inject an additional amount of catalyst.

**[1150]** In yet another example of a static agitator mixing monomers in a chemical processing plant to produce a polymer, the expert system may use feedback related to the viscosity of the polymer, color of the polymer, reactivity of the polymer and the like to iterate to a new setting or parameter for the agitator, such as for example, a setting that alters the Reynolds number, an increase in temperature, a pressure increase, and the like.

**[1151]** In a further example of a catalytic reactor in a chemical processing plant, the expert system may use feedback related to a reaction rate, a product concentration, a product color, and the like. In this example, as feedback is received during operation of the catalytic reactor, the expert system may instruct the reactor to modify one or more operational parameters, such as to increase or decrease a temperature and/or inject an additional amount of catalyst.

**[1152]** In yet a further example of a thermic heating systems in a chemical processing or food plant, the expert system may use feedback related to BTUs out of the system, a flow rate, and the like. In this example, as feedback is received during operation of the thermic heating system, the expert system may instruct the system to modify one or more operational parameters, such as to change the input feedstock, to increase the flow of the feedstock, and the like.

**[1153]** In still a further example of using boiler feed water in a refinery, the expert system may use feedback related to an aeration level, a temperature, and the like. In this example, as feedback is received related to the boiler feed water, the expert system may instruct the system to modify one or more operational parameters of a boiler, such as to increase a reduction in aeration, to increase the flow of the feed water, and the like.

**[1154]** In still a further example of a storage tank in a refinery, the expert system may use feedback related to a temperature, a pressure, a flow rate out of the tank, and the like. In this example, as feedback is received related to the storage tank, the expert system may instruct the system to modify one or more operational parameters of, such as to increase cooling or heating begin agitation, and the like.

**[1155]** In an example of a condensate/make-up water system in a power station that condenses steam from turbines and recirculates it back to a boiler feeder along with make-up water, the expert system may use feedback related to measuring inward air leaks, heat transfer, and make-up water quality. In this example, as feedback is received related to the condensate/make-up water system, the expert system may instruct the system to increase a purification of the make-up water, bring a vacuum pump online, and the like.

**[1156]** In another example of a stirrer in a food plant, the expert system may use feedback related to a viscosity of the food, a color of the food, a temperature of the food, and the

like. In this example, as feedback is received, the expert system may instruct the stirrer to speed up or slow down, depending on the predicted success in reaching a goal.

**[1157]** In another example of a pressure cooker in a food plant, the expert system may use feedback related to a viscosity of the food, a color of the food, a temperature of the food, and the like. In this example, as feedback is received, the expert system may instruct the pressure cooker to continue operating, increase a temperature, or the like, depending on the predicted success in reaching a goal.

**[1158]** In an embodiment, a system **11100** for data collection in an industrial environment may include a plurality of input sensors **11102** communicatively coupled to a controller **11106**, a data collection circuit **11104** structured to collect output data **11108** from the input sensors **11102**, and a machine learning data analysis circuit **11110** structured to receive the output data **11108** and learn received output data patterns **11112** indicative of an outcome, wherein the machine learning data analysis circuit **11110** is structured to learn received output data patterns **11112** by being seeded with a model **11114** based on industry-specific feedback **11118**. The model **11114** may be a physical model, an operational model, or a system model. The industry-specific feedback **11118** may be one or more of a utilization measure, an efficiency measure (e.g., power and/or financial), a measure of success in prediction or anticipation of states (e.g., an avoidance and mitigation of faults), a productivity measure (e.g., a workflow), a yield measure, and a profit measure. The industry-specific feedback **11118** includes an amount of power generated by a machine about which the input sensors provide information during operation of the machine. The industry-specific feedback **11118** includes a measure of the output of an assembly line about which the input sensors provide information. The industry-specific feedback **11118** includes a failure rate of units of product produced by a machine about which the input sensors provide information. The industry-specific feedback **11118** includes a fault rate of a machine about which the input sensors provide information. The industry-specific feedback **11118** includes the power utilization efficiency of a machine about which the input sensors provide information, wherein the machine is one of a turbine, a transformer, a generator, a compressor, one that stores energy, and one that includes power train components (e.g., the rate of extraction of a material by a machine about which the input sensors provide information, the rate of production of a gas by a machine about which the input sensors provide information, the rate of production of a hydrocarbon product by a machine about which the input sensors provide information), and the rate of production of a chemical product by a machine about which the input sensors provide information. The machine learning data analysis circuit **11110** may be further structured to learn received output data patterns **11112** based on the outcome. The system **11100** may keep or modify operational parameters or equipment. The controller **11106** may adjust the weighting of the machine learning data analysis circuit **11110** based on the learned received output data patterns **11112** or the outcome, collect more/fewer data points from the input sensors based on the learned received output data patterns **11112** or the outcome, change a data storage technique for the output data **11108** based on the learned received output data patterns **11112** or the outcome, change a data presentation mode or manner based on the learned received output data patterns **11112** or the outcome, and apply one or more filters (low pass, high pass, band pass, etc.) to the output data **11108**. In embodiments, the system **11100** may remove/re-task under-utilized equipment based on one or more of the learned received output data patterns **11112** and the outcome. The machine learning data analysis circuit **11110** may include a neural network expert system. The input sensors may measure vibration and noise data. The machine learning data analysis circuit **11110** may be structured to learn received output data patterns **11112** indicative of progress/alignment with one or more goals/guidelines (e.g., which may be determined by a different subset of the input sensors). The machine learning data analysis circuit **11110** may be structured to learn received output data patterns **11112** indicative of an unknown variable. The machine learning data analysis circuit **11110** may be structured to learn received output data patterns **11112** indicative of a preferred input among available inputs. The machine learning data analysis circuit **11110** may be structured to learn received output data patterns **11112** indicative of a preferred input data collection band among available input data collection bands. The machine learning data analysis circuit **11110** may be disposed in part on a machine, on one or more data collectors, in network infrastructure, in the cloud, or any combination thereof. The system **11100** may be deployed on the data collection circuit **11104**. The system **11100** may be distributed between the data collection circuit **11104** and a remote infrastructure. The data collection circuit **11104** may include a data collector.

**[1159]** In embodiments, a system **11100** for data collection in an industrial environment may include a plurality of input sensors **11102** communicatively coupled to a controller **11106**, a data collection circuit **11104** structured to collect output data **11108** from the input sensors, and a machine learning data analysis circuit **11110** structured to receive the output data **11108** and learn received output data patterns **11112** indicative of an outcome, wherein the machine learning data analysis circuit **11110** is structured to learn received output data patterns **11112** by being seeded with a model **11114** based on a utilization measure.

**[1160]** In embodiments, a system **11100** for data collection in an industrial environment may include a plurality of input sensors **11102** communicatively coupled to a controller **11106**, a data collection circuit **11104** structured to collect output data **11108** from the input sensors, and a machine learning data analysis circuit **11110** structured to receive the output data **11108** and learn received output data patterns **11112** indicative of an outcome, wherein the machine learning data analysis circuit **11110** is structured to learn received output data patterns **11112** by being seeded with a model **11114** based on an efficiency measure.

**[1161]** In embodiments, a system **11100** for data collection in an industrial environment may include a plurality of input sensors **11102** communicatively coupled to a controller **11106**, a data collection circuit **11104** structured to collect output data **11108** from the input sensors, and a machine learning data analysis circuit **11110** structured to receive the output data **11108** and learn received output data patterns **11112** indicative of an outcome, wherein the machine learning data analysis circuit **11110** is structured to learn received output data patterns **11112** by being seeded with a model **11114** based on a measure of success in prediction or anticipation of states.

**[1162]** In embodiments, a system **11100** for data collection in an industrial environment may include a plurality of input

sensors **11102** communicatively coupled to a controller **11106**, a data collection circuit **11104** structured to collect output data **11108** from the input sensors, and a machine learning data analysis circuit **11110** structured to receive the output data **11108** and learn received output data patterns **11112** indicative of an outcome, wherein the machine learning data analysis circuit **11110** is structured to learn received output data patterns **11112** by being seeded with a model **11114** based on a productivity measure.

**[1163]** Clause 1. In embodiments, a system for data collection in an industrial environment, comprising: a plurality of input sensors communicatively coupled to a controller; a data collection circuit structured to collect output data from the input sensors; and a machine learning data analysis circuit structured to receive the output data and learn received output data patterns indicative of an outcome, wherein the machine learning data analysis circuit is structured to learn received output data patterns by being seeded with a model based on industry-specific feedback. 2. The system of clause 1, wherein the model is a physical model, an operational model, or a system model. 3. The system of clause 1, wherein the industry-specific feedback is a utilization measure. 4. The system of clause 1, wherein the industry-specific feedback is an efficiency measure. 5. The system of clause 4, wherein the efficiency measure is one of power and financial. 6. The system of clause 1, wherein the industry-specific feedback is a measure of success in prediction or anticipation of states. 7. The system of clause 6, wherein the measure of success is an avoidance and mitigation of faults. 8. The system of clause 1, wherein the industry-specific feedback is a productivity measure. 9. The system of clause 8, wherein the productivity measure is a workflow. 10. The system of clause 1, wherein the industry-specific feedback is a yield measure. 11. The system of clause 1, wherein the industry-specific feedback is a profit measure. 12. The system of clause 1, wherein the machine learning data analysis circuit is further structured to learn received output data patterns based on the outcome. 13. The system of clause 1, wherein the system keeps or modifies operational parameters or equipment. 14. The system of clause 1, wherein the controller adjusts the weighting of the machine learning data analysis circuit based on the learned received output data patterns or the outcome. 15. The system of clause 1, wherein the controller collects more/fewer data points from the input sensors based on the learned received output data patterns or the outcome. 16. The system of clause 1, wherein the controller changes a data storage technique for the output data based on the learned received output data patterns or the outcome. 17. The system of clause 1, wherein the controller changes a data presentation mode or manner based on the learned received output data patterns or the outcome. 18. The system of clause 1, wherein the controller applies one or more filters (low pass, high pass, band pass, etc.) to the output data. 19. The system of clause 1, wherein the system removes/re-tasks under-utilized equipment based on one or more of the learned received output data patterns and the outcome. 20. The system of clause 1, wherein the machine learning data analysis circuit comprises a neural network expert system. 21. The system of clause 1, wherein the input sensors measure vibration and noise data. 22. The system of clause 1, wherein the machine learning data analysis circuit is structured to learn received output data patterns indicative of progress/alignment with one or more goals/guidelines. 23. The system of clause 22, wherein progress/alignment of each goal/guideline is determined by a different subset of the input sensors. 24. The system of clause 1, wherein the machine learning data analysis circuit is structured to learn received output data patterns indicative of an unknown variable. 25. The system of clause 1, wherein the machine learning data analysis circuit is structured to learn received output data patterns indicative of a preferred input among available inputs. 26. The system of clause 1, wherein the machine learning data analysis circuit is structured to learn received output data patterns indicative of a preferred input data collection band among available input data collection bands. 27. The system of clause 1, wherein the machine learning data analysis circuit is disposed in part on a machine, on one or more data collectors, in network infrastructure, in the cloud, or any combination thereof. 28. The system of clause 1, wherein the system is deployed on the data collection circuit. 29. The system of clause 1, wherein the system is distributed between the data collection circuit and a remote infrastructure. 30. The system of clause 1, wherein the industry-specific feedback includes an amount of power generated by a machine about which the input sensors provide information during operation of the machine. 31. The system of clause 1, wherein the industry-specific feedback includes a measure of the output of an assembly line about which the input sensors provide information. 32. The system of clause 1, wherein the industry-specific feedback includes a failure rate of units of product produced by a machine about which the input sensors provide information. 33. The system of clause 1, wherein the industry-specific feedback includes a fault rate of a machine about which the input sensors provide information. 34. The system of clause 1, wherein the industry-specific feedback includes the power utilization efficiency of a machine about which the input sensors provide information. 35. The system of clause 34, wherein the machine is a turbine. 36. The system of clause 34, wherein the machine is a transformer. 37. The system of clause 34, wherein the machine is a generator. 38. The system of clause 34, wherein the machine is a compressor. 39. The system of clause 34, wherein the machine stores energy. 40. The system of clause 1, wherein the machine includes power train components. 41. The system of clause 34, wherein the industry-specific feedback includes the rate of extraction of a material by a machine about which the input sensors provide information. 42. The system of clause 34, wherein the industry-specific feedback includes the rate of production of a gas by a machine about which the input sensors provide information. 43. The system of clause 34, wherein the industry-specific feedback includes the rate of production of a hydrocarbon product by a machine about which the input sensors provide information. 44. The system of clause 34, wherein the industry-specific feedback includes the rate of production of a chemical product by a machine about which the input sensors provide information. 45. The system of clause 1, wherein the data collection circuit comprises a data collector. 46. A system for data collection in an industrial environment, comprising: a plurality of input sensors communicatively coupled to a controller; a data collection circuit structured to collect output data from the input sensors; and a machine learning data analysis circuit structured to receive the output data and learn received output data patterns indicative of an outcome, wherein the machine learning data analysis circuit is structured to learn received output data patterns by being

seeded with a model based on a utilization measure. 47. A system for data collection in an industrial environment, comprising: a plurality of input sensors communicatively coupled to a controller; a data collection circuit structured to collect output data from the input sensors; and a machine learning data analysis circuit structured to receive the output data and learn received output data patterns indicative of an outcome, wherein the machine learning data analysis circuit is structured to learn received output data patterns by being seeded with a model based on an efficiency measure. 48. A system for data collection in an industrial environment, comprising: a plurality of input sensors communicatively coupled to a controller; a data collection circuit structured to collect output data from the input sensors; and a machine learning data analysis circuit structured to receive the output data and learn received output data patterns indicative of an outcome, wherein the machine learning data analysis circuit is structured to learn received output data patterns by being seeded with a model based on a measure of success in prediction or anticipation of states. 49. A system for data collection in an industrial environment, comprising: a plurality of input sensors communicatively coupled to a controller; a data collection circuit structured to collect output data from the input sensors; and a machine learning data analysis circuit structured to receive the output data and learn received output data patterns indicative of an outcome, wherein the machine learning data analysis circuit is structured to learn received output data patterns by being seeded with a model based on a productivity measure.

**[1164]** In embodiments, a system for data collection in an industrial environment may include an expert system graphical user interface in which a user may, by interacting with a graphical user interface element, set a parameter of a data collection band for collection by a data collector. The parameter may relate to at least one of setting a frequency range for collection and setting an extent of granularity for collection.

**[1165]** In embodiments, a system for data collection in an industrial environment may include an expert system graphical user interface in which a user may, by interacting with a graphical user interface element, identify a set of sensors among a larger set of available sensors for collection by a data collector. The user interface may include views of available data collectors, their capabilities, one or more corresponding smart bands, and the like.

**[1166]** In embodiments, a system for data collection in an industrial environment may include an expert system graphical user interface in which a user may, by interacting with a graphical user interface element, select a set of inputs to be multiplexed among a set of available inputs.

**[1167]** In embodiments, a system for data collection in an industrial environment may include an expert system graphical user interface in which a user may, by interacting with a graphical user interface element, select a component of an industrial machine displayed in the graphical user interface for data collection, view a set of sensors that are available to provide data about the industrial machine, and select a subset of sensors for data collection.

**[1168]** In embodiments, a system for data collection in an industrial environment may include an expert system graphical user interface in which a user may, by interacting with a graphical user interface element, view a set of indicators of fault conditions of one or more industrial machines, where the fault conditions are identified by application of an expert system to data collected from a set of data collectors. In embodiments, the fault conditions may be identified by manufacturers of portions of the one or more industrial machines. The fault conditions may be identified by analysis of industry trade data, third-party testing agency data, industry standards, and the like. In embodiments, a set of indicators of fault conditions of one or more industrial machines may include indicators of stress, vibration, heat, wear, ultrasonic signature, operational deflection shape, and the like, optionally including any of the widely varying conditions that can be sensed by the types of sensors described throughout this disclosure and the documents incorporated herein by reference.

**[1169]** In embodiments, a system for data collection in an industrial environment may include an expert graphical user interface that enables a user to select from a list of component parts of an industrial machine for establishing smart-band monitoring and in response thereto presents the user with at least one smart-band definition of an acceptable range of values for at least one sensor of the industrial machine and a list of correlated sensors from which data will be gathered and analyzed when an out of acceptable range condition is detected from the at least one sensor.

**[1170]** In embodiments, a system for data collection in an industrial environment may include an expert graphical user interface that enables a user to select from a list of conditions of an industrial machine for establishing smart-band monitoring and, in response thereto, presents the user with at least one smart-band definition of an acceptable range of values for at least one sensor of the industrial machine and a list of correlated sensors from which data will be gathered and analyzed when an out of acceptable range condition is detected from the at least one sensor.

**[1171]** In embodiments, a system for data collection in an industrial environment may include an expert graphical user interface that enables a user to select from a list of reliability measures of an industrial machine for establishing smart-band monitoring and, in response thereto, presents the user with at least one smart-band definition of an acceptable range of values for at least one sensor of the industrial machine and a list of correlated sensors from which data will be gathered and analyzed when an out of acceptable range condition is detected from the at least one sensor. In the system, the reliability measures may include one or more of industry average data, manufacturer's specifications, material specifications, recommendations, and the like. In embodiments, reliability measures may include measures that correlate to failures, such as stress, vibration, heat, wear, ultrasonic signature, operational deflection shape effect, and the like. In embodiments, manufacturer's specifications may include cycle count, working time, maintenance recommendations, maintenance schedules, operational limits, material limits, warranty terms, and the like. In embodiments, the sensors in the industrial environment may be correlated to manufacturer's specifications by associating a condition being sensed by the sensor to a specification type. In embodiments, a non-limiting example of correlating a sensor to a manufacturer's specification may include a duty cycle specification being correlated to a sensor that detects revolutions of a moving part. In embodiments, a temperature specification may correlate to a thermal sensor disposed to sense an ambient temperature proximal to the industrial machine.

**[1172]** In embodiments, a system for data collection in an industrial environment may include an expert graphical user interface that automatically creates a smart-band group of sensors disposed in the industrial environment in response to receiving a condition of the industrial environment for monitoring and an acceptable range of values for the condition.

**[1173]** In embodiments, a system for data collection in an industrial environment may include an expert graphical user interface that presents a representation of components of an industrial machine deployable in the industrial environment on an electronic display, and in response to a user selecting one or more of the components, searches a database of industrial machine failure modes for modes involving the selected component(s) and conditions associated with the failure mode(s) to be monitored, and further identifies a plurality of sensors in, on, or available to be disposed on the presented machine representation from which data will automatically be captured when the condition(s) to be monitored are detected to be outside of an acceptable range. In embodiments, the identified plurality of sensors includes at least one sensor through which the condition(s) will be monitored.

**[1174]** In embodiments, a system for data collection in an industrial environment may include a user interface for working with smart bands that may facilitate a user identifying sensors to include in a smart band group of sensors by selecting sensors presented on a map of a machine in the environment. A user may be guided to select among a subset of all possible sensors based on smart band criteria, such as types of sensor data required for the smart band. A smart band may be focused on detecting trending conditions in a portion of the industrial environment; therefore, the user interface may direct the user choose among an identified subset of sensors, such as by only allowing sensors proximal to the smart band directed portion of the environment to be selectable in the user interface.

**[1175]** In embodiments, a smart band data collection configuration and deployment user interface may include views of components in an industrial environment and related available sensors. In embodiments, in response to selection of a component part of an industrial machine depicted in the user interface, sensors associated with smart band data collection for the component part may be highlighted so that the user may select one or more of the sensors. User selection in this context may comprise a verification of an automatic selection of sensors, or manually identifying sensors to include in the smart band sensor group.

**[1176]** In embodiments, in response to selection of a smart band condition, such as trending of bearing temperature, a user interface for smart band configuration and use may automatically identify and present sensors that contribute to smart band analysis for the condition. A user may responsive to this presentation of sensors, confirm or otherwise acknowledge one or more sensors individually or as a set to be included in the smart band data collection group.

**[1177]** In embodiments, a smart band user interface may present locations of industrial machines in an industrial environment on a map. The locations may be annotated with indicators of smart band data collection templates that are configured for collecting smart band data for the machines at the annotated locations. The locations may be color coded to reflect a degree of smart band coverage for a machine at the location. In embodiments, a location of a machine with a high degree of smart band coverage may be colored green, whereas a location of a machine with low smart band coverage may be colored red or some other contrasting color. Other annotations, such as visual annotations may be used. A user may select a machine at a location and by dragging the selected machine to a location of a second machine, effectively configure smart bands for the second machine that correspond to smart bands for the first machine. In this way, a user may configure several smart band data collection templates for a newly added machine or a new industrial environment and the like.

**[1178]** In embodiments, various configurations and selections of smart bands may be stored for use throughout a data collection platform, such as for selecting templates for sensing, templates for routing, provisioning of devices and the like, as well as for direct the placement of sensors, such as by personnel or by machines, such as autonomous or remote-control drones.

**[1179]** In embodiments, a smart band user interface may present a map of an industrial environment that may include industrial machines, machine-specific data collectors, mobile data collectors (robotic and human), and the like. A user may view a list of smart band data collection actions to be performed and may select a data collection resource set to undertake the collection. In an example, a guided mobile robot may be equipped with data collection systems for collecting data for a plurality of smart band data sets. A user may view an industrial environment with which the robot is associated and assign the robot to perform a smart band data collection activity by selecting the robot, a smart band data collection template, and a location in the industrial environment, such as a machine or a part of a machine. The user interface may provide a status of the collection undertaking so that the user can be informed when the data collection is complete.

**[1180]** In embodiments, a smart band operation management user interface may include presentation of smart band data collection activity, analysis of results, actions taken based on results, suggestions for changes to smart band data collection (e.g., addition of sensors to a smart band collection template, increasing duration of data collection for a template-specific collection activity), and the like. The user interface may facilitate "what if" type analysis by presenting potential impacts on reliability, costs, resource utilization, data collection tradeoffs, maintenance schedule impacts, risk of failure (increase/decrease), and the like in response to a user's attempt to make a change to a smart band data collection template, such as a user relaxing a threshold for performing smart band data collection and the like. In embodiments, a user may select or enter a target budget for preventive maintenance per unit time (e.g., per month, quarter, and the like) into the user interface and an expert system of the user interface may recommend a smart band data collection template and thresholds for complying with the budget.

**[1181]** In embodiments, a smart band user interface may facilitate a user configuring a system for data collection in an industrial environment for smart band data gathering. The user interface may include display of industrial machine components, such as motors, linkages, bearings, and the like that a user may select. In response to such a selection, an expert system may work with the user interface to present a list of potential failure conditions related to the part to monitor. The user may select one or more conditions to

monitor. The user interface may present the conditions to monitor as a set that the user may be asked to approve. The user may indicate acceptance of the set or of select conditions in the set monitor. As a follow-on to a user selection/approval of one or more conditions to monitor, the user interface may display a map of relevant sensors available in the industrial environment for collecting data as a smart band group of sensors. The relevant sensors may be associated with one or more parts (e.g., the part(s) originally selected by the user), one or more failure conditions, and the like.

**[1182]** In embodiments, the expert system may compare the relevant sensors in the environment to a preferred set of sensors for smart band monitoring of the failure condition(s) and provide feedback to the user, such as a confidence factor for performing smart band monitoring based on the available sensors for the failure condition(s). The user may evaluate the failure condition and smart band analysis information presented and may take an action in the user interface, such as approving the relevant sensors. In response, a smart band data collection template for configuring the data collection system may be created. In embodiments, a smart band data collection template may be created independently of a user approval. In such embodiments, the user may indicate explicitly or implicitly via approval of the smart band analysis information an approval of the created template.

**[1183]** In embodiments, a smart band user interface may work with an expert system to present candidate portions of an industrial machine in an industrial environment for smart band condition monitoring based on information such as manufacturer's specifications, statistical information derived from real-world experience with similar industrial machines, and the like. In embodiments, the user interface may permit a user to select certain aspects of the smart band data collection and analysis process including—for example, a degree of reliability/failure risk to monitor (e.g., near failure, best performance, industry average, and the like). In response thereto, the expert system may adjust an aspect of the smart band analysis, such as a range of acceptable value to monitor, a monitor frequency, a data collection frequency, a data collection amount, a priority for the data collection activity (e.g., effectively a priority of a template for data collection for the smart band), weightings of data from sensors (e.g., specific sensors in the group, types of sensors, and the like).

**[1184]** In embodiments, a smart bands user interface may be structured to allow a user to let an expert system recommend one or more smart bands to implement based on a range of comparative data that the user might prioritize, such as industry average data, industry best data, near-by comparable machines, most similarly configured machines, and the like. Based on the comparative data weighting, the expert system may use the user interface to recommend one or more smart band templates that align with the weighting to the user, who may take an action in the user interface, such as approving one or more of the recommended templates for use.

**[1185]** In embodiments, a user interface for configuring arrangement of sensors in an industrial environment may include recommendations by industrial environment equipment suppliers (e.g., manufacturers, wholesalers, distributors, dealers, third-party consultants, and the like) of group(s) of sensors to include for performing smart band analysis of components of the industrial equipment. The information may be presented to a user as data collection template(s) that the user may indicate as being accepted/approved, such as by positioning a graphic representing a template(s) over a portion of the industrial equipment.

**[1186]** In embodiments, a smart band discovery portal may facilitate sharing of smart band related information, such as recommendations, actual use cases, results of smart band data collection and processing, and the like. The discovery portal may be embodied as a panel in a smart band user interface.

**[1187]** In embodiments, a smart band assessment portal may facilitate assessment of smart band-based data collection and analysis. Content that may be presented in such a portal may include depictions of uses of existing smart band templates for one or more industrial machines, industrial environments, industries, and the like. A value of a smart band may be ascribed to each smart band in the portal based, for example, on historical use and outcomes. A smart band assessment portal may also include visualization of candidate sensors to include in a smart band data collection template based on a range of factors including ascribed value, preventive maintenance costs, failure condition being monitored, and the like.

**[1188]** In embodiments, a smart bands graphical user interface associated with a system for data collection in an industrial environment may be deployed for industrial components, such as of factory-based air conditioning units. A user interface of a system for data collection for smart band analysis of air conditioning units may facilitate graphical configuration of smart band data collection templates and the like for specific air conditioning system installations. In embodiments, major components of an air conditioning system, such as a compressor, condenser, heat exchanger, ducting, coolant regulators, filters, fans, and the like along with corresponding sensors for a particular installation of the air conditioning system may be depicted in a user interface. A user may select one or more of these components in the user interface for configuring a system for smart band data collection. In response to the user selecting, for example, a coolant compressor, sensors associated with the compressor may be automatically identified in the user interface. The user may be presented with a recommended data collection template to perform smart band data collection for the selected compressor. Alternatively, the user may request a candidate collection template from a community of smart band users, such as through a smart band template sharing panel of the user interface. Once a template is selected, the user interface may offer the user customization options, such as frequency of collection, degree of reliability to monitor, and the like. Upon final acceptance of the template, the user interface may interact with a data collection system of the installed air conditioning system (if such a system is available) to implement the data collection template and provide an indication to the user of the result of implementing the template. In response thereto, the user may make a final approval of the template for use with the air conditioning unit.

**[1189]** In embodiments, a smart bands graphical user interface associated with a system for data collection in an industrial environment may be deployed for oil and gas refinery-based chillers. A user interface of a system for data collection for smart band analysis of refinery-based chillers may facilitate graphical configuration of smart band data collection templates and the like for specific refinery-based

chiller installations. In embodiments, major components of a refinery-based chiller including heat exchangers, compressors, water regulators and the like along with corresponding sensors for the particular installation of the refinery-based chiller may be depicted in a user interface. A user may select one or more of these components in the user interface for configuring a system for smart band data collection. In response to the user selecting, for example, water regulators, sensors associated with the water regulators may be automatically identified in the user interface. The user may be presented with a recommended data collection template to perform smart band data collection for the selected component. Alternatively, the user may request a candidate collection template from a community of smart band users, such as through a smart band template sharing panel of the user interface. Once a template is selected, the user interface may offer the user customization options, such as frequency of collection, degree of reliability to monitor, and the like. Upon final acceptance of the template, the user interface may interact with a data collection system of the installed refinery-based chiller (if such a system is available) to implement the data collection template and provide an indication to the user of the result of implementing the template. In response thereto, the user may make a final approval of the template for use with the refinery-based chiller.

**[1190]** In embodiments, a smart bands graphical user interface associated with a system for data collection in an industrial environment may be deployed for automotive production line robotic assembly systems. A user interface of a system for data collection for smart band analysis of production line robotic assembly systems may facilitate graphical configuration of smart band data collection templates and the like for specific production line robotic assembly system installations. In embodiments, major components of a production line robotic assembly system including motors, linkages, tool handlers, positioning systems and the like along with corresponding sensors for the particular installation of the production line robotic assembly system may be depicted in a user interface. A user may select one or more of these components in the user interface for configuring a system for smart band data collection. In response to the user selecting, for example, robotic linkage sensors associated with the robotic linkages may be automatically identified in the user interface. The user may be presented with a recommended data collection template to perform smart band data collection for the selected component. Alternatively, the user may request a candidate collection template from a community of smart band users, such as through a smart band template sharing panel of the user interface. Once a template is selected, the user interface may offer the user customization options, such as frequency of collection, degree of reliability to monitor, and the like. Upon final acceptance of the template, the user interface may interact with a data collection system of the installed production line robotic assembly system (if such a system is available) to implement the data collection template and provide an indication to the user of the result of implementing the template. In response thereto, the user may make a final approval of the template for use with the production line robotic assembly system.

**[1191]** In embodiments, a smart bands graphical user interface associated with a system for data collection in an industrial environment may be deployed for automotive production line robotic assembly systems. A user interface of a system for data collection for smart band analysis of production line robotic assembly systems may facilitate graphical configuration of smart band data collection templates and the like for specific production line robotic assembly system installations. In embodiments, major components of construction site boring machinery, such as the cutter head, which itself is a subsystem that may have many components, control systems, debris handling and conveying components, precast concrete delivery and installation subsystems and the like along with corresponding sensors for the particular installation of the production line robotic assembly system may be depicted in a user interface. A user may select one or more of these components in the user interface for configuring a system for smart band data collection. In response to the user selecting, for example, debris handling components sensors associated with the debris handling components, such as a conveyer may be automatically identified in the user interface. The user may be presented with a recommended data collection template to perform smart band data collection for the selected component. Alternatively, the user may request a candidate collection template from a community of smart band users, such as through a smart band template sharing panel of the user interface. Once a template is selected, the user interface may offer the user customization options, such as frequency of collection, degree of reliability to monitor, and the like. Upon final acceptance of the template, the user interface may interact with a data collection system of the installed production line robotic assembly system (if such a system is available) to implement the data collection template and provide an indication to the user of the result of implementing the template. In response thereto, the user may make a final approval of the template for use with the production line robotic assembly system.

**[1192]** Referring to FIG. **149**, an exemplary user interface for smart band configuration of a system for data collection in an industrial environment is depicted. The user interface **11200** may include an industrial environment visualization portion **11202** in which may be depicted one or more sensors, machines, and the like. Each sensor, machine, or portion thereof (e.g., motor, compressor, and the like) may be selectable as part of a smart-band configuration process. Likewise, each sensor, machine or portion thereof may be visually highlighted during the smart-band configuration process, such as in response to user selection, or automated identification as being part of a group of smart band sensors. The user interface may also include a smart band selection portion **11204** or panel in which smart band indicators, failure modes, and the like may be depicted in selectable elements. User selection of a symptom, failure mode and the like may cause corresponding components, sensors, machines, and the like in the industrial visualization portion to be highlighted. The user interface may also include a customization panel **11206** in which attributes of a selected smart band, such as acceptable ranges, frequency of monitoring and the like may be made available for a user to adjust.

**[1193]** Cause 1. In embodiments, a system comprising: a user interface comprising: a selectable graphical element that facilitates selection of a representation of a component of an industrial machine from an industrial environment in which a plurality of sensors is deployed from which a data collection system collects data for the system for which the

user interface enables interaction; and selectable graphical elements representing a portion of the plurality of sensors that facilitate selection of a sensors to form a data collection subset of sensors in the industrial environment. 2. The system of clause 1, wherein selection of sensors to form a data collection subset results in a data collection template adapted to facilitate configuring the data routing and collection system for collecting data from the data collection subset of sensors. 3. The system of clause 1, wherein the user interface comprises an expert system that analyzes a user selection of a graphical element that facilitates selection of a component and adjusts the selectable graphical elements representing a portion of the plurality of sensors to activate only sensors associated with a component associated with the selected graphical element. 4. The system of clause 1, wherein the selectable graphical element that facilitates selection of a component of an industrial machine further facilitates presentation of a plurality of data collection templates associated with the component. 5. The system of clause 1, wherein the portion of the plurality of sensors comprises a smart band group of sensors. 6. The system of clause 5, wherein the smart band group of sensors comprises sensors for a component of the industrial machine selected by the selectable graphical element. 7. A system comprising: an expert graphical user interface comprising representations of a plurality of components of an industrial machine from an industrial environment in which a plurality of sensors is deployed from which a data collection system collects data for the system for which the user interface enables interaction, wherein at least one representation of the plurality of components is selectable by a user in the user interface; a database of industrial machine failure modes; and a database searching facility that searches the database of failure modes for modes that correspond to a user selection of a component of the plurality of components. 8. The system of clause 7, comprising a database of conditions associated with the failure modes. 9. The system of clause 8, wherein the database of conditions includes a list of sensors in the industrial environment associated with the condition. 10. The system of clause 9, wherein the database searching facility further searches the database of conditions for sensors that correspond to at least one condition and indicates the sensors in the graphical user interface. 11. The system of clause 7, wherein the user selection of a component of the plurality of components causes a data collection template for configuring the data routing and collection system to automatically collect data from sensors associated with the selected component. 12. A method comprising: presenting in an expert graphical user interface a list of reliability measures of an industrial machine; facilitating user selection of one reliability measure from the list; presenting a representation of a smart band data collection template associated with the selected reliability measure; and in response to a user indication of acceptance of the smart band data collection template, configuring a data routing and collection system to collect data from a plurality of sensors in an industrial environment in response to a data value from one of the plurality of sensors being detected outside of an acceptable range of data values. 13. The method of clause 12, wherein the reliability measures include one or more of industry average data, manufacturer's specifications, manufacturer's material specifications, and manufacturer's recommendations. 14. The method of clause 13, wherein include the manufacturer's specifications include at least one of cycle count, working time, maintenance recommendations, maintenance schedules, operational limits, material limits, and warranty terms. 15. The method of clause 12, wherein the reliability measures correlate to failures selected from the list consisting of stress, vibration, heat, wear, ultrasonic signature, and operational deflection shape effect. 16. The method of clause 12, further comprising correlating sensors in the industrial environment to manufacturer's specifications. 17. The method of clause 16, wherein correlating comprises matching a duty cycle specification to a sensor that detects revolutions of a moving part. 18. The method of clause 16, wherein correlating comprises matching a temperature specification with a thermal sensor disposed to sense an ambient temperature proximal to the industrial machine. 19. The method of clause 16, further comprising dynamically setting the acceptable range of data values based on a result of the correlating. 20. The method of clause 16, further comprising automatically determining the one of the plurality of sensors for detecting the data value outside of the acceptable range based on a result of the correlating.

**[1194]** Back calculation, such as for determining possible root causes of failures and the like, may benefit from a graphical approach that facilitates visualizing an industrial environment, machine, or portion thereof marked with indications of information sources that may provide data such as sensors and the like related to the failure. A failed part, such as a bearing, may be associated with other parts, such as shaft, motor, and the like. Sensors for monitoring conditions of the bearing and the associated parts may provide information that could indicate a potential source of failure. Such information may also be useful to suggest indicators, such as changes in sensor output, to monitor or avoid the failure in the future. A system that facilitates a graphical approach for back-calculation may interact with sensor data collection and analysis systems to at least partially automate aspects related to data collection and processing determined from a back-calculation process.

**[1195]** In embodiments, a system for data collection in an industrial environment may include a user interface in which portions of an industrial machine associated with a condition of interest, such as a failure condition, are presented on an electronic display along with sensor data types contributing to the condition of interest, data collection points (e.g., sensors) associated with the machine portions that monitor the data types, a set of data from the data collection points that was collected and used to determine the condition of interest, and an annotation of sensors that delivered exceptional data, such as data that is out of an acceptable range, and the like, that may have been used to determine the condition of interest. The user interface may access a description of the machine that facilitates determining and visualizing related components, such as bearing, shafts, brakes, rotors, motor housings, and the like that contribute to a function, such as rotating a turbine. The user interface may also access a data set that relates sensors disposed in and about the machine with the components. Information in the data set may include descriptions of the sensors, their function, a condition that each senses, typical or acceptable ranges of values output from the sensors, and the like. The information in the data set may also identify a plurality of potential pathways in a system for data collection in an industrial environment for sensor data to be delivered to a data collector. The user interface may also access a data set

that may include data collection templates used to configure a data collection system for collecting data from the sensors to meet specific purposes (e.g., to collect data from groups of sensors into a sensor data set suitable for determining a condition of the machine, such as a degree of slippage of the shaft relative to the motor, and the like).

**[1196]** In embodiments, a method of back-calculation for determining candidate sources of data collection for data that contributes to a condition of an industrial machine may include following routes of data collection determined from a configuration and operational template of a data collection system for collecting data from sensors deployed in the industrial machine that was in place when the contributing data was collected. A configuration and operational template may describe signal path switching, multiplexing, collection timing, and the like for data from a group of sensors. The group of sensors may be local to a component, such as a bearing, or more regionally distributed, such as sensors that capture information about the bearing and its related components. In embodiments, a data collection template may be configured for collecting and processing data to detect a particular condition of the industrial machine. Therefore, templates may be correlated to conditions so that performing back-calculation of a condition of interest can be guided by the correlated template. Data collected based on the template may be examined and compared to acceptable ranges of data for various sensors. Data that is outside of an acceptable range may indicate potential root causes of an unacceptable condition. In embodiments, a suspect source of data collection may be determined from the candidate sources of data collection based on a comparison of data collected from the candidate data sources with an acceptable range of data collected from each candidate data source. Visualizing these back-calculation based signal paths, candidate sensors, and suspect data sources provides a user with valuable insights into possible root causes of failures and the like.

**[1197]** In embodiments, a method for back-calculation may include visualizing route(s) of data that contribute to a fault condition detected in an industrial environment by applying back-calculation to determine sources of the contributed data with the visualizing appearing as highlighted data paths in a visual representation of the data collection system in the industrial machine. In embodiments, determining sources of data may be based on a data collection and processing template for the fault condition. The template may include a configuration of a data collection system when data from the determined sources was collected with the system.

**[1198]** When failures occur, or conditions of a portion of a machine in an industrial environment reach a critical point prior to failure, such as may be detected during preventive maintenance and the like, back-calculation may be useful in determining information to gather that might help avoid the failure and/or improve system performance—for example, by avoiding substantive degradation in component operation. Visualizing data collection sources, components related to a condition, algorithms that may determine the potential onset of the condition and the like may facilitate preparation of data collection templates for configuring data sensing, routing, and collection resources in a system for data collection in an industrial environment. In embodiments, configuring a data collection template for a system for collecting data in an industrial environment may be based on back-calculations applied to machine failures that identify candidate conditions to monitor for avoiding the machine failures. The resulting template may identify sensors to monitor, sensor data collection path configuration, frequency, and amount of data to collect, acceptable levels of sensor data, and the like. With access to information about the machine, such as which parts closely relate to others and sensors that collected data from parts in the machine, a data collection system configuration template may be automatically generated when a target component is identified.

**[1199]** In embodiments, a user interface may include a graphical display of data sources as a logical arrangement of sensors that may contribute data to a calculation of a condition of a machine in an industrial environment. A logical arrangement may be based on sensor type, data collection template, condition, algorithm for determining a condition, and the like. In an example, a user may wish to view all temperature sensors that may contribute to a condition, such as a failure of a part in an industrial environment. A user interface may communicate with a database of machine related information, such as parts that relate to a condition, sensors for those parts, and types of those sensors to determine the subset of sensors that measure temperature. The user interface may highlight those sensors. The user interface may activate selectable graphical elements for those sensors that, when selected by the user, may present data associated with those sensors, such as sensor type, ranges of data collected, acceptable ranges, actual data values collected for a given condition, and the like, such as in a pop-up panel or the like. Similar functionality of the user interface may apply to physical arrangements of sensors, such as all sensors associated with a motor, boring machine cutting head, wind turbine, and the like.

**[1200]** In embodiments, third-parties, such as component manufacturers, remote maintenance organizations and the like may benefit from access to back-calculation visualization Permitting third parties to have access to back-calculation information, such as sensors that contributed unacceptable data values to a calculation of a condition, visualization of sensor positioning, and the like may be an option that a user can exercise in a user interface for a graphical approach to back-calculations as described herein. A list of manufacturers of machines, sub-systems, individual components, sensors, data collection systems, and the like may be presented along with remote maintenance organizations, and the like in a portion of a user interface. A user of the interface may select one or more of these third-parties to grant access to at least a portion of the available data and visualizations. Selecting one or more of these third-parties may also present statistical information about the party, such occurrences and frequency of access to data to which the party is granted access, request from the party for access, and the like.

**[1201]** In embodiments, visualization of back-calculation analysis may be combined with machine learning so that back-calculations and their visualizations may be used to learn potential new diagnoses for conditions, such as failure conditions, to learn new conditions to monitor, and the like. A user may interact with the user interface to provide the machine learning techniques feedback to improve results, such as indicating a success or failure of an attempt to prevent failures through specific data collection and processing solutions (e.g., templates), and the like.

**[1202]** In embodiments, methods and systems of back-calculation of data collected with a system for data collec-

tion in an industrial environment may be applied to concrete pouring equipment in a construction site application. Concrete pouring equipment may comprise several active components including mixers that may include water and aggregate supply systems, mixing control systems, mixing motors, directional controllers, concrete sensors and the like, concrete pumps, delivery systems, flow control as well as on/off controls, and the like. Back-calculation of failure or other conditions of active or passive components of a concrete pouring equipment may benefit from visualization of the equipment, its components, sensors, and other points where data is collected (e.g., controllers and the like). Visualizing data/conditions collected from sensors associated with concrete pumps and the like when performing back-calculation of a flow rate failure condition may inform the user of a conditions of the pump that may contribute to the flow rate failure. Flow rate may decrease contemporaneously with an increase in temperature of the pump. This may be visualized by, for example, presenting the flow rate sensor data and the pump temperature sensor data in the user interface. This correlation may be noted by an expert system or by a user observing the visualization and corrective action may be taken.

**[1203]** In embodiments, methods and systems of back-calculation of data collected with a system for data collection in an industrial environment may be applied to digging and extraction systems in a mining application. Digging and extraction systems may comprise several active sub-systems including cutting heads, pneumatic drills, jack hammers, excavators, transport systems, and the like. Back-calculation of failure or other conditions of active or passive components of digging and extraction systems may benefit from visualization of the equipment, its components, sensors, and other points where data is collected (e.g., controllers and the like). Visualizing data/conditions collected from sensors associated with pneumatic drills and the like when performing back-calculation of a pneumatic line failure condition may inform the user of a conditions of the drill that may contribute to the line failure. Line pressure may increase contemporaneously with a change of a condition of the drill. This may be visualized by, for example, presenting the line pressure sensor data and data from sensors associated with the drill in the user interface. This correlation may be noted by an expert system or by a user observing the visualization and corrective action may be taken.

**[1204]** In embodiments, methods and systems of back-calculation of data collected with a system for data collection in an industrial environment may be applied to cooling towers in an oil and gas production environment. Cooling towers may comprise several active components including feedwater systems, pumps, valves, temperature-controlled operation, storage systems, mixing systems, and the like. Back-calculation of failure or other conditions of active or passive components of cooling towers may benefit from visualization of the equipment, its components, sensors and other points where data is collected (e.g., controllers and the like). Visualizing data/conditions collected from sensors associated with the cooling towers and the like when performing back-calculation of a circulation pump failure condition may inform the user of a conditions of the cooling towers that may contribute to the pump failure. Temperature of the feedwater may increase contemporaneously with a decrease in output of the circulation pump. This may be visualized by, for example, presenting the feed water temperature sensor data and the pump output rate sensor data in the user interface. This correlation may be noted by an expert system or by a user observing the visualization and corrective action may be taken.

**[1205]** In embodiments, methods and systems of back-calculation of data collected with a system for data collection in an industrial environment may be applied to circulation water systems in a power generation application. Circulation water systems may comprise several active components including, pumps, storage systems, water coolers, and the like. Back-calculation of failure or other conditions of active or passive components of circulation water systems may benefit from visualization of the equipment, its components, sensors and other points where data is collected (e.g., controllers and the like). Visualizing data/conditions collected from sensors associated with water coolers and the like when performing back-calculation of a circulation water temperature failure condition may inform the user of a conditions of the cooler that may contribute to the temperature condition failure. Circulation temperature may increase contemporaneously with an increase of core water cooler temperature. This may be visualized by, for example, presenting the circulation water temperature sensor data and the water cooler temperature sensor data in the user interface. This correlation may be noted by an expert system or by a user observing the visualization and corrective action may be taken.

**[1206]** Referring to FIG. **150** a graphical approach **11300** for back-calculation is depicted. Components of an industrial environment may be depicted in a map of the environment **11302**. Components that may have a history of failure (with this installation or others) may be highlighted. In response to a selection of one of these components (such as by a user making the selection), related components and sensors for the selected part and related components may be highlighted, including signal routing paths for the data from their relevant sensors to a data collector. Additional highlighting may be added to sensors from which unacceptable data has been collected, thereby indicating potential root causes of a failure of the selected part. The relationships among the parts may be based at least in part on machine configuration metadata. The relationship between specific sensors and the failure condition may be based at least in part on a data collection template associated with the part and/or associated with the failure condition.

**[1207]** Clause 1. In embodiments, a system comprising: a user interface of a system adapted to collect data in an industrial environment; the user interface comprising: a plurality of graphical elements representing mechanical portions of an industrial machine, wherein the plurality of graphical elements is associated with a condition of interest generated by a processor executing a data analysis algorithm; a plurality of graphical elements representing data collectors in a system adapted for collecting data in an industrial environment that collected data used in the data analysis algorithm; and a plurality of graphical elements representing sensors used to capture the data used in the data analysis algorithm, wherein graphical elements for sensors that provided data that was outside of an acceptable range of data values are indicated through a visual highlight in the user interface. 2. The system of clause 1, wherein the condition of interest is selected from a list of conditions of interest presented in the user interface. 3. The system of clause 1, wherein the condition of interest is a mechanical

failure of at least one of the mechanical portions of the industrial machine. 4. The system of clause 1, wherein the mechanical portions comprise at least one of a bearing, shaft, rotor, housing, and linkage of the industrial machine. 5. The system of clause 1, wherein the acceptable range of data values is available for each sensor. 6. The system of clause 1, further comprising highlighting data collectors that collected the data that was outside of the acceptable range of data values. 7. The system of clause 1, further comprising a data collection system configuration template that facilitates configuring the data collection system to collect the data for calculating the condition of interest. 8. A method of determining candidate sources of a condition of interest comprising: identifying a data collection template for configuring data routing and collection resources in a system adapted to collect data in an industrial environment, wherein the template was used to collect data that contributed to a calculation of the condition of interest; determining paths from data collectors for the collected data to sensors that produced the collected data by analyzing the data collection template; comparing data collected by the sensors with acceptable ranges of data values for data collected by the sensors; and highlighting, in an electronic user interface that depicts the industrial environment and at least one of the sensors, at least one sensor that produced data that contributed to the calculation of the condition of interest that is outside of the acceptable range of data for that sensor. 9. The method of clause 8, wherein the condition of interest is a failure condition. 10. The method of clause 8, wherein the data collection template comprises configuration information for at least one of an analog crosspoint switch, a multiplexer, a hierarchical multiplexer, a sensor, a collector, and a data storage facility of the system adapted to collect data in the industrial environment. 11. The method of clause 8, wherein the highlighting in the industrial environment comprises highlighting he at least one sensor, and at least one route of data from the sensor to a data collector of the system for data collection in the industrial environment. 12. The method of clause 8, wherein comparing data collected by the sensors with acceptable ranges of data values comprises comparing data collected by each sensor with an acceptable range of data values that is specific to each sensor. 13. The method of clause 8, wherein the calculation of the condition of interest comprises calculating a trend of data from at least one sensor. 14. The method of clause 8, wherein the acceptable range of values comprises a trend of data values. 15. A method of visualizing routes of data that contribute to a condition of interest that is detected in an industrial environment, the method comprising: applying back calculation to the condition of interest to determine a data collection system configuration template associated with the condition of interest; analyzing the template to determine a configuration of the data collection system for collecting data for detecting the condition of interest; presenting, in an electronic user interface, a map of the data collection configured by the template; and highlighting, in the electronic user interface, routes in the data collection system that reflect paths of data from at least one sensor to at least one data collector for data that contributes to calculating the condition of interest. 16. The method of clause 15 wherein the data collection system configuration template comprises configuration information for at least one resource deployed in the data collection system selected from the list consisting of an analog crosspoint switch, a multiplexer, a hierarchical multiplexer, a data collector, and a sensor. 17. The method of clause 15, further comprising generating a target diagnosis for the condition of interest by applying machine learning to the back calculation. 18. The method of clause 15, further comprising highlighting in the electronic user interface, sensors that produce data used in calculating the condition of interest that is outside of an acceptable range of data values for the sensor. 19. The method of clause 15, wherein the condition of interest is selected from a list of conditions of interest presented in the user interface. 20. The system of clause 15, wherein the condition of interest is a mechanical failure of at least one mechanical portion of the industrial environment. 21. The system of clause 15, wherein the mechanical portions comprise at least one of a bearing, shaft, rotor, housing, and linkage of the industrial environment.

**[1208]** In embodiments, a system for data collection in an industrial environment may route data from a plurality of sensors in the industrial environment to wearable haptic stimulators that present the data from the sensors as human detectable stimuli including at least one of tactile, vibration, heat, sound, and force. In embodiments, the haptic stimulus represents an effect on the machine resulting from the sensed data. In embodiments, a bending effect may be presented as bending a finger of a haptic glove. In embodiments, a vibrating effect may be presented as vibrating a haptic arm band. In embodiments, a heating effect may be presented as an increase in temperature of a haptic wrist band. In embodiments, an electrical effect (e.g., over voltage, current, and others) may be presented as a change in sound of a phatic audio system.

**[1209]** In embodiments, an industrial machine operator haptic user interface may be adapted to provide haptic stimuli to the operator that is responsive to the operator's control of the machine, wherein the stimuli indicate an impact on the machine as a result of the operator's control and interaction with objects in the environment as a result thereof. In embodiments, sensed conditions of the machine that exceed an acceptable range may be presented to the operator through the haptic user interface. In embodiments, the sensed conditions of the machine that are within an acceptable range may not be presented to the operator through the haptic user interface. In embodiments, the sensed conditions of the machine that are within an acceptable range may presented as natural language representations of confirmation of the operator control. In embodiments, at least a portion of the haptic user interface is worn by the operator. In embodiments, a wearable haptic user interface device may include force exerting devices along the outer legs of a device operator's uniform. When a vehicle that the operator is controlling approaches an obstacle along a lateral side of the vehicle, an inflatable bellows may be inflated, exerting pressure against the leg of the operator closest to the side of the vehicle approaching the obstacle. The bellows may continue to be inflated, thereby exerting additional pressure on the operator's leg that is consistent with the proximity of the obstacle. The pressure may be pulsed when contact with the obstacle is imminent. In another example, an arm band of an operator may vibrate in coordination with vibration being experienced by a portion of the vehicle that the operator is controlling. These are merely examples and not intended to be limiting or restrictive of the ways in which a wearable haptic feedback user

device may be controlled to indicate conditions that are sensed by a system for data collection in an industrial environment.

**[1210]** In embodiments, a haptic user interface safety system worn by a user in an industrial environment may be adapted to indicate proximity to the user of equipment in the environment by stimulating a portion of the user with at least one of pressure, heat, impact, electrical stimuli and the like, the portion of the user being stimulated may be closest to the equipment. In embodiments, at least one of the type, strength, duration, and frequency of the stimuli is indicative of a risk of injury to the user.

**[1211]** In embodiments, a wearable haptic user interface device, that may be worn by a user in an industrial environment, may broadcast its location and related information upon detection of an alert condition in the industrial environment. The alert condition may be proximal to the user wearing the device, or not proximal but related to the user wearing the device. A user may be an emergency responder, so the detection of a situation requiring an emergency responded, the user's haptic device may broadcast the user's location to facilitate rapid access to the user or by the user to the emergency location. In embodiments, an alert condition may be determined from monitoring industrial machine sensors may be presented to the user as haptic stimuli, with the severity of the alert corresponding to a degree of stimuli. In embodiments, the degree of stimuli may be based on the severity of the alert, the corresponding stimuli may continue, be repeated, or escalate, optionally including activating multiple stimuli concurrently, send alerts to additional haptic users, and the like until an acceptable response is detected, e.g., through the haptic UI. The wearable haptic user device may be adapted to communicate with other haptic user devices to facilitate detecting the acceptable response.

**[1212]** In embodiments, a wearable haptic user interface for use in an industrial environment may include gloves, rings, wrist bands, watches, arm bands, head gear, belts, necklaces, shirts (e.g., uniform shirt), foot wear, pants, ear protectors, safety glasses, vests, overalls, coveralls, and any other article of clothing or accessory that can be adapted to provide haptic stimuli.

**[1213]** In embodiments, wearable haptic device stimuli may be correlated to a sensor in an industrial environment. Non-limiting examples include a vibration of a wearable haptic device in response to vibration detected in an industrial environment; increasing or decreasing the temperature of a wearable haptic device in response to a detected temperature in an industrial environment; producing sound that changes in pitch responsively to changes in a sensed electrical signal, and the like. In embodiments, a severity of wearable haptic device stimuli may correlate to an aspect of a sensed condition in the industrial environment. Non-limiting examples include moderate or short-term vibration for a low degree of sensed vibration; strong or long-term vibration stimulation for an increase in sensed vibration; aggressive, pulsed, and/or multi-mode stimulation for a high amount of sensed vibration. Wearable haptic device stimuli may also include lighting (e.g., flashing, color changes, and the like), sound, odor, tactile output, motion of the haptic device (e.g., inflating/deflating a balloon, extension/retraction of an articulated segment, and the like), force/impact, and the like.

**[1214]** In embodiments, a system for data collection in an industrial environment may interface with wearable haptic feedback user devices to relay data collected from fuel handling systems in a power generation application to the user via haptic stimulation. Fuel handling for power generation may include solid fuels, such as woodchips, stumps, forest residue, sticks, energy willow, peat, pellets, bark, straw, agro biomass, coal, and solid recovery fuel. Handling systems may include receiving stations that may also sample the fuel, preparation stations that may crush or chip wood-based fuel or shred waste-based fuel. Fuel handling systems may include storage and conveying systems, feed and ash removal systems and the like. Wearable haptic user interface devices may be used with fuel handling systems by providing an operator feedback on conditions in the handling environment that the user is otherwise isolated from. Sensors may detect operational aspects of a solid fuel feed screw system. Conditions like screw rotational rate, weight of the fuel, type of fuel, and the like may be converted into haptic stimuli to a user while allowing the user to use his hands and provide his attention to operate the fuel feed system.

**[1215]** In embodiments, a system for data collection in an industrial environment may interface with wearable haptic feedback user devices to relay data collected from suspension systems of a truck and/or vehicle application to the user via haptic stimulation. Haptic simulation may be correlated with conditions being sensed by the vehicle suspension system. In embodiments, road roughness may be detected and converted into vibration-like stimuli of a wearable haptic arm band. In embodiments, suspension forces (contraction and rebound) may be converted into stimuli that present a scaled down version of the forces to the user through a wearable haptic vest.

**[1216]** In embodiments, a system for data collection in an industrial environment may interface with wearable haptic feedback user devices to relay data collected from hydroponic systems in an agriculture application to the user via haptic stimulation. In embodiments, sensors in hydroponic systems, such as temperature, humidity, water level, plant size, carbon dioxide/oxygen levels, and the like may be converted to wearable device haptic stimuli. As an operator wearing haptic feedback clothing walks through a hydroponic agriculture facility, sensors proximal to the operator may signal to the haptic feedback clothing relevant information, such as temperature or a measure of actual temperature versus desired temperature that the haptic clothing may convert into haptic stimuli. In an example, a wrist band may include a thermal stimulator that can change temperature quickly to track temperature data or a derivative thereof from sensors in the agriculture environment. As a user walks through the facility, the haptic feedback wristband may change temperature to indicate a degree to which proximal temperatures are complying with expected temperatures.

**[1217]** In embodiments, a system for data collection in an industrial environment may interface with wearable haptic feedback user devices to relay data collected from robotic positioning systems in an automated production line application to the user via haptic stimulation Haptic feedback may include receiving a positioning system indicator of accuracy and converting it to an audible signal when the accuracy is acceptable, and another type of stimuli when the accuracy is not acceptable.

**[1218]** Referring to FIG. **151**, a wearable haptic user interface device for providing haptic stimuli to a user that is responsive to data collected in an industrial environment by a system adapted to collect data in the industrial environ-

ment is depicted. A system for data collection **11402** in an industrial environment **11400** may include a plurality of sensors. Data from those sensors may be collected and analyzed by a computing system. A result of the analysis may be communicated wirelessly to one or more wearable haptic feedback stimulators **11404** worn by a user associated with the industrial environment. The wearable haptic feedback stimulators may interpret the result, convert it into a form of stimuli based on a haptic stimuli-to-sensed condition mapping, and produce the stimuli.

**[1219]** Clause 1. In embodiments, a system for data collection in an industrial environment, comprising: a plurality of wearable haptic stimulators that produce stimuli selected from the list of stimuli consisting of tactile, vibration, heat, sound, force, odor, and motion; a plurality of sensors deployed in the industrial environment to sense conditions in the environment; a processor logically disposed between the plurality of sensors and the wearable haptic stimulators, the processor receiving data from the sensors representative of the sensed condition, determining at least one haptic stimulation that corresponds to the received data, and sending at least one signal for instructing the wearable haptic stimulators to produce the at least one stimulation 2 The system of clause 1, wherein the haptic stimulation represents an effect on a machine in the industrial environment resulting from the condition. 3. The system of clause 2, wherein a bending effect is presented as bending a haptic device. 4. The system of clause 2, wherein a vibrating effect is presented as vibrating a haptic device. 5. The system of clause 2, wherein a heating effect is presented as an increase in temperature of a haptic device. 6. The system of clause 2, wherein an electrical effect is presented as a change in sound produced by a haptic device. 7. The system of clause 2, wherein at least one of the plurality of wearable haptic stimulators are selected from the list consisting of a glove, ring, wrist band, wrist watch, arm band, head gear, belt, necklace, shirt, foot wear, pants, overalls, coveralls, and safety goggles. 8. The system of clause 2, wherein the at least one signal comprises an alert of a condition of interest in the industrial environment. 9. The system of clause 8, wherein the at least one stimulation produced in response to the alert signal is repeated by at least one of the plurality of wearable haptic stimulators until an acceptable response is detected. 10. An industrial machine operator haptic user interface that is adapted to provide the operator haptic stimuli responsive to the operator's control of the machine based on at least one sensed condition of the machine that indicates an impact on the machine as a result of the operator's control and interaction with objects in the environment as a result thereof. 11. The user interface of clause 10, wherein a sensed condition of the machine that exceeds an acceptable range of data values for the condition is presented to the operator through the haptic user interface. 12. The user interface of clause 10, wherein a sensed condition of the machine that is within an acceptable range of data values for the condition is presented as natural language representations of confirmation of the operator control via an audio haptic stimulator. 13. The user interface of clause 10, wherein at least a portion of the haptic user interface is worn by the operator. 14. The system of clause 10, wherein a vibrating sensed condition is presented as vibrating stimulation by the haptic user interface. 15. The system of clause 10, wherein a temperature-based sensed condition is presented as heat stimulation by the haptic user interface. 16. A haptic user interface safety system worn by a user in an industrial environment, wherein the interface is adapted to indicate proximity to the user of equipment in the environment by haptic stimulation via a portion of the haptic user interface that is closest to the equipment, wherein at least one of the type, strength, duration, and frequency of the stimulation is indicative of a risk of injury to the user. 17. The haptic user interface of clause 16, wherein the haptic stimulation is selected from a list consisting of pressure, heat, impact, and electrical stimulation. 18. The haptic user interface of clause 16 wherein the haptic user interface further comprises a wireless transmitter that broadcasts a location of the user. 19. The haptic user interface of clause 18, wherein the wireless transmitter broadcasts a location of the user in response to indicating proximity of the user to the equipment. 20. The haptic user interface of clause 16, wherein the proximity to the user of equipment in the environment is based on sensor data provided to the haptic user interface from a system adapted to collect data in an industrial environment, wherein the system is adapted based on a data collection template associated with a user safety condition in the industrial environment.

**[1220]** In embodiments, a system for data collection in an industrial environment may facilitate presenting a graphical element indicative of industrial machine sensed data on an augmented reality (AR) display. The graphical element may be adapted to represent a position of the sensed data on a scale of acceptable values of the sensed data. The graphical element may be positioned proximal to a sensor detected in the field of view being augmented that captured the sensed data in the AR display. The graphical element may be a color and the scale may be a color scale ranging from cool colors (e.g., greens, blues) to hot colors (e.g., yellow, red) and the like. Cool colors may represent data values closer to the midpoint of the acceptable range and the hot colors representing data values close to or outside of a maximum or minimum value of the range.

**[1221]** In embodiments, a system for data collection in an industrial environment may present, in an AR display, data being collected from a plurality of sensors in the industrial environment as one of a plurality graphical effects (e.g., colors in a range of colors) that correlate the data being collected from each sensor to a scale of values within an acceptable range compared to values outside of the acceptable range. In embodiments, the plurality of graphical effects may overlay a view of the industrial environment and placement of the plurality of graphical effects may correspond to locations in the view of the environment at which a sensor is located that is producing the corresponding sensor data. In embodiments, a first set of graphical effects (e.g., hot colors) represent components for which multiple sensors indicate values outside acceptable ranges.

**[1222]** In embodiments, a system for data collection in an industrial environment may facilitate presenting, in an AR display information being collected by sensors in the industrial environment as a heat map overlaying a visualization of the environment so that regions of the environment with sensor data suggestive of a greater potential of failure are overlaid with a graphic effect that is different than regions of the environment with sensor data suggestive of a lesser potential of failure. In embodiments, the heat map is based on data currently being sensed. In embodiments, the heat map is based on data from prior failures. In embodiments, the heat map is based on changes in data from an earlier period, such as data that suggest an increased likelihood of

machine failure. In embodiments, the heat map is based on a preventive maintenance plan and a record of preventive maintenance in the industrial environment.

**[1223]** In embodiments, a system for data collection in an industrial environment may facilitate presenting information being collected by sensors in the industrial environment as a heat map overlaying a view of the environment, such as a live view as may be presented in an AR display. Such a system may include presenting an overlay that facilitates a call to action, wherein the overlay is associated with a region of the heat map. The overlay may comprise a visual effect of a part or subsystem of the environment on which the action is to be performed. In embodiments, the action to be performed is maintenance related and may be part-specific.

**[1224]** In embodiments, a system for data collection in an industrial environment may facilitate updating, in an AR view of a portion of the environment, a heat map of aspects of the industrial environment based on a change to operating instructions for at least one aspect of a machine in the industrial environment. The heat map may represent compliance with operational limits for portions of machines in the industrial environment. In embodiments, the heat map may represent a likelihood of component failure as a result of the change to operation instructions.

**[1225]** In embodiments, a system for data collection in an industrial environment may facilitate presenting, as a heat map in an AR view of a portion of the environment, a degree or measure of coverage of sensors in the industrial environment for a data collection template that identifies select sensors in the industrial environment for a data collection activity.

**[1226]** In embodiments, a system for data collection in an industrial environment may facilitate displaying a heat map overlaying a view, such as a live view, of an industrial environment of failure-related data for various portions of the environment. The failure-related data may comprise a difference between an actual failure rate of the various portions and another failure rate. Another failure rate may be a rate of failure of comparable portions elsewhere in the environment, and/or average failure rate of comparable portions across a plurality of environments, such as an industry average, manufacturer failure rate estimate, and the like.

**[1227]** In embodiments, a system for data collection in an industrial environment may facilitate displaying a heat map related to data collected from robotic arms and hands for production line robotic handling in an augmented reality view of a portion of the environment. A heat map related to data collected from robotic arms and hands may represent data from sensors disposed in—for example, the fingers of a robotic hand Sensor may collect data, such as applied pressure when pinching an object, resistance (e.g., responsive to a robotic touch) of an object, multi-axis forces presented to the finger as it performs an operation, such as holding a tool and the like, temperature of the object, total movement of the finger from initial point of contact until a resistance threshold is met, and other hand position/use conditions. Heat maps of this data may be presented in an augmented reality view of a robotic production environment so that a user may make a visual assessment of, for example, how the relative positioning of the robotic fingers impacts the object being handled.

**[1228]** In embodiments, a system for data collection in an industrial environment may facilitate displaying a heat map related to data collected from linear bearings for production line robotic handling in an augmented reality view of a portion of the environment. Linear bearings, as with most bearings, may not be visible while in use. However, assessing their operation may benefit from representing data from sensors that capture information about the bearings while in use in an augmented reality display. In embodiments, sensors may be placed to detect forces being placed on portions of the bearings by the rotating member or elements that the bearings support. These forces may be presented as heat maps that correspond to relative forces, on a visualization of the bearings in an augmented reality view of a robot handling machine that uses linear bearings.

**[1229]** In embodiments, a system for data collection in an industrial environment may facilitate displaying a heat map related to data collected from boring machinery for mining in an augmented reality view of a portion of the environment. Boring machinery, and in particular multi-tip circular boring heads may experience a range of rock formations at the same time. Sensors may be placed proximal to each boring tip that may detect forces experienced by the tips. The data may be collected by a system adapted to collect data in an industrial environment and provided to an augmented reality system that may display the data as heat maps or the like in a view of the boring machine.

**[1230]** Referring to FIG. **152**, an augmented reality display of heat maps based on data collected in an industrial environment by a system adapted to collect data in the environment is depicted. An augmented reality view of an industrial environment **11500** may include heat maps **11502** that depict data received from or derived from data received from sensors **11504** in the industrial environment. Sensor data may be captured and processed by a system adapted for data collection and analysis in an industrial environment. The data may be converted into a form that is suitable for use in an augmented reality system for displaying heat maps. The heat maps **11502** may be aligned in the augmented reality view with a sensor from which the underlying data was sourced.

**[1231]** Clause 1. In embodiments, an augmented reality (AR) system in which industrial machine sensed data is presented in a view of the industrial machine as heat maps of data collected from sensors in the view, wherein the heat maps are positioned proximal to a sensor capturing the sensed data that is visible in the AR display. 2. The system of clause 1, wherein the heat maps are based on a comparison of real time data collected from sensors with an acceptable range of values for the data. 3. The system of clause 1, wherein the heat maps are based on trends of sensed data. 4. The system of clause 1, wherein the heat maps represent a measure of coverage of sensors in the industrial environment in response to a condition of interest that is calculated from data collected by sensors in the industrial environment. 5. The system of clause 1, wherein the heat maps of data collected from sensors in the view is based on data collected by a system adapted to collect data in the industrial environment by routing data from a plurality of sensors to a plurality of data collectors via at least one of an analog crosspoint switch, a multiplexer, and a hierarchical multiplexer. 6. The system of clause 1, wherein the heat maps present different collected data values as different colors. 7. The system of clause 1, wherein data collected from a plurality of sensors is combined to produce a heat map. 8. A system for data collection in an industrial environment,

comprising: an augmented reality display that presents data being collected from a plurality of sensors in the industrial environment as one of a plurality of colors, wherein the colors correlate the data being collected from each sensor to a color scale with cool colors mapping to values of the data within an acceptable range and hot colors mapping to values of the data outside of the acceptable range, wherein the plurality of colors overlay a view of the industrial environment and placement of the plurality of colors corresponds to locations in the view of the environment at which a sensor is located that is producing the corresponding sensor data. 9. The system of clause 8, wherein hot colors represent components for which multiple sensors indicate values outside typical ranges. 10. The system of clause 8, wherein the plurality of colors is based on a comparison of real time data collected from sensors with an acceptable range of values for the data. 11. The system of clause 8, wherein the plurality of colors is based on trends of sensed data. 12. The system of clause 8, wherein the plurality of colors represents a measure of coverage of sensors in the industrial environment in response to a condition of interest that is calculated from data collected by sensors in the industrial environment. 13. A method comprising, presenting information being collected by sensors in an industrial environment as a heat map overlaying a view of the environment so that regions of the environment with sensor data suggestive of a greater potential of failure are overlaid with a heat map that is different than regions of the environment with sensor data suggestive of a lesser potential of failure. 14. The method of clause 13, wherein the heat map is based on data currently being sensed. 15. The method of clause 13, wherein the heat map is based on data from prior failure data. 16. The method of clause 13, wherein the heat map is based on changes in data from an earlier period that suggest an increased likelihood of machine failure. 17. The method of clause 13, wherein the heat map is based on a preventive maintenance plan and a record of preventive maintenance in the industrial environment. 18. The method of clause 13, wherein the heat map represents an actual failure rate versus a reference failure rate. 19. The method of clause 18, wherein the reference failure rate is an industry average failure rate. 20. The method of clause 18, wherein the reference failure rate is a manufacturer's failure rate estimate.

**[1232]** In embodiments, a system for data collection and visualization thereof in an industrial environment may include an augmented reality and/or virtual reality (AR/VR) display in which data values output by sensors disposed in a field of view in the AR/VR display are displayed with visual attributes that indicate a degree of compliance of the data to an acceptable range or values for the sensed data. In embodiments, the visual attributes may provide near real-time portrayal of trends of the sensed data and/or of derivatives thereof. In embodiments, the visual attributes may be the actual data being captured, or the derived data, such as a trend of the data and the like.

**[1233]** In embodiments, a system for data collection and visualization thereof in an industrial environment may include an AR/VR display in which trends of data values output by sensors disposed in a field of view in the AR/VR are displayed with visual attributes that indicate a degree of severity of the trend. In embodiments, other data or analysis that could be displayed may include: data from sensors that exceed an acceptable range, data from sensors that are part of a smart band selected by the user, data from sensors that are monitored for triggering a smart band collection action, data from sensors that sense an aspect of the environment that meets preventive maintenance criteria, such as a PM action is upcoming soon, a PM action was recently performed or is overdue for PM. Other data for such AR/VR visualization may include data from sensors for which an acceptable range has recently been changed, expanded, narrowed and the like. Other data for such AR/VR visualization that may be particularly useful for an operator of an industrial machine (digging, drilling, and the like) may include analysis of data from sensors, such as for example impact on an operating element (torque, force, strain, and the like).

**[1234]** In embodiments, a system for data collection and visualization thereof in an industrial environment that may include presentation of visual attributes that represent collected data in an AR/VR environment may do so for pumps in a mining application. Mining application pumps may provide water and remove liquefied waste from a mining site. Pump performance may be monitored by sensors detecting pump motors, regulators, flow meters, and the like. Pump performance monitoring data may be collected and presented as a set of visual attributes in an augmented reality display. In an example, pump motor power consumption, efficiency, and the like may be displayed proximal to a pump viewed through an augmented reality display.

**[1235]** In embodiments, a system for data collection and visualization thereof in an industrial environment that may include presentation of visual attributes that represent collected data in an AR/VR environment may do so for energy storage in a power generation application. Power generation energy storage may be monitored with sensors that capture data related to storage and use of stored energy. Information such as utilization of individual energy storage cells, energy storage rate (e.g., battery charging and the like), stored energy consumption rate (e.g., KWH being supplied by an energy storage system), storage cell status, and the like may be captured and converted into augmented reality viewable attributes that may be presented in an augmented reality view of an energy storage system.

**[1236]** In embodiments, a system for data collection and visualization thereof in an industrial environment that may include presentation of visual attributes that represent collected data in an AR/VR environment may do so for feed water systems in a power generation application. Sensors may be disposed in an industrial environment, such as power generation for collecting data about feed water systems. Data from those sensors may be captured and processed by the system for data collection. Results of this processing may include trends of the data, such as feed water cooling rates, flow rates, pressure and the like. These trends may be presented on an augmented reality view of a feed water system by applying a map of sensors with physical elements visible in the view and then retrieving data from the mapped sensors. The retrieved data (and derivatives thereof) may be presented in the augmented reality view of the feed water system.

**[1237]** Referring to FIG. **153**, an augmented reality display **11600** comprising real time data **11602** overlaying a view of an industrial environment is depicted. Sensors **11604** in the environment may be recognized by the augmented reality system, such as by first detecting an industrial machine, system, or part thereof with which the sensors are associated. Data from the sensors **11604** may be retrieved

from a data repository, processed into trends, and presented in the augmented reality view **11600** proximal to the sensors from which the data originates

**[1238]** Clause 1 In embodiments, a system for data collection and visualization thereof in an industrial environment in which data values output by sensors disposed in a field of view in an electronic display are displayed in the electronic display with visual attributes that indicate a degree of compliance of the data to an acceptable range or values for the sensed data. 2. The system of clause 1, wherein the view in the electronic display is a view in an augmented reality display of the industrial environment. 3. The system of clause 1, wherein the visual attributes are indicative of a trend of the sensed data over time relative to the acceptable range. 4. The system of clause 1, wherein the data values are disposed in the electronic display proximal to the sensors from which the data values are output. 5. The system of clause 1, wherein the visual attributes further comprise an indication of a smart band set of sensors associated with the sensor from which the data values are output. 6. A system for data collection and visualization thereof in an industrial environment in which data values output by select sensors disposed in an augmented reality view of the industrial environment are displayed with visual attributes that indicate a degree of compliance of the data to an acceptable range or values for the sensed data. 7. The system of clause 6, wherein the sensors are selected based on a data collection template that facilitates configuring sensor data routing resources in the system. 8. The system of clause 7, wherein the select sensors are indicated in the template as part of a group of smart band sensors. 9. The system of clause 7, wherein the select sensors are sensors that are monitored for triggering a smart band data collection action. 10. The system of clause 6, wherein the select sensors are sensors that sense an aspect of the environment associated with preventive maintenance criteria. 11. The system of clause 6, wherein the visual attributes further indicate if the acceptable range has been expanded or narrowed within the past 72 hours. 12. A system for data collection and visualization thereof in an industrial environment in which trends of data values output by select sensors disposed in a field of view of the industrial environment depicted in an augmented reality display are displayed with visual attributes that indicate a degree of severity of the trend. 13. The system of clause 12, wherein sensors are selected when data from the sensors exceed an acceptable range of values. 14. The system of clause 14, wherein sensors are selected based on the sensors being part of a smart band group of sensors. 15. The system of clause 12, wherein the visual attributes further indicate a compliance of the trend with an acceptable range of data values. 16. The system of clause 12, wherein the system for data collection is adapted to route data from the select sensors to a controller of the augmented reality display based on a data collection template that facilitates configuring routing resources of the system for data collection. 17. The system of clause 12, wherein the sensors are selected in response to the sensor data being configured in a smart band data collection template as an indication for triggering a smart band data collection action. 18. The system of clause 12, wherein the sensors are selected in response to preventive maintenance criteria. 19. The system of clause 18, wherein the preventive maintenance criteria are selected from the list consisting of a preventive maintenance action is scheduled, a preventive maintenance action has been completed in the last 72 hours, a preventive maintenance action is overdue.

**[1239]** FIG. **155** shows a system for data collection in an industrial environment having a self-sufficient data acquisition box for capturing and analyzing data in an industrial environment including sensor inputs **11700**, **11702**, **11704**, **11706** that connect to a data circuit **11708** for analyzing the sensor inputs, a network communication interface **11712**, a network control circuit **11710** for sending and receiving information related to the sensor inputs to an external system and a data filter circuit configured to dynamically adjust what portion of the information is sent based on instructions received over the network communication interface. A variety of sensor inputs X connect to the data circuit Y. The data circuit intercommunicates with a network control circuit, which is connected to one or more network interfaces. These interfaces may include wired interfaces or wireless interfaces, communicating via a star, multi-hop, peer-to-peer, hub-and-spoke, mesh, ring, hierarchical, daisy-chained, broadcast, or other networking protocol. These interfaces may be multi-pair as in Ethernet, or single-wire networking protocol such as I2C. The networking protocol may interface one or more of a variety of variants of Ethernet and other protocols for real-time communication in an industrial network, including Modbus® over TCP, Industrial Ethernet, Ethernet Powerlink, Ethernet/IP, EtherCAT, Sercos®, Profinet™, CAN bus, serial protocols, near-field protocols, as well as home automation protocols such as ZigBee®, Z-Wave™, or wireless WWAN or WLAN protocols such as LTE™, Wi-Fi, Bluetooth™, or others. The sensor inputs can be permanently or removably connected to the thing they are measuring, or may be integrated in a standalone data acquisition box. The entire system may be integrated into the apparatus that is being measured, such as a vehicle (e.g., a car, a truck, a commercial vehicle, a tractor, a construction vehicle or other type of vehicle), a component or item of equipment (e.g., a compressor, agitator, motor, fan, turbine, generator, conveyor, lift, robotic assembly, or any other item as described throughout this disclosure), an infrastructure element (such as a foundation, a housing, a wall, a floor, a ceiling, a roof, a doorway, a ramp, a stairway, or the like) or other feature or aspect of an industrial environment. The entire system may be integrated into a stationary industrial system such as a production assembly, static components of an assembly line subject to wear and stress (such as rail guides), or motive elements such as robotics, linear actuators, gearboxes, and vibrators.

**[1240]** FIG. **156** shows an airborne drone **11730** data acquisition box with onboard sensors **11732** and four motors **11734** to provide lift and movement control. In embodiments, the drone **11730** has a charging dock capability and in embodiments, a battery changing capability so that the same drone **11730** can return to inspection after a brief return to base for battery replacement. The drone **11730** can travel from a location near the systems to be sensed. The drone **11730** can detect the presence of other sensor drone and avoid collisions based on both active sensors and network-coordinated flight plans. These sensor drones **11730** inspect and sense environmental and apparatus conditions based on scheduled tours of sensor reconnaissance. They also respond to specific events, either command driven (human requests for additional data), requests from other drone s, events such as a detected anomaly in an item to be sensed with more

scrutiny e.g., sensing by multiple drone s with multiple sensors. They respond to AI both integrated into the drone **11730** or located in a remote server, that analyzes conditions and generates a request for additional data and inspection of an environment or apparatus. The drone **11730** can be configured with multiple sensors. For instance, most drones **11730** are equipped with some sort of visual sensor, either in visual light or infrared range, as well as certain forms of active guidance sensor technology such as light-pulse distance sensing, sonar-pulse sensing. In addition, drones **11730** can be equipped with additional sensors such as specific chemical sensors and magnetic sensors designed to analyze the materials of specific apparatus and machinery.

**[1241]** FIG. **157** shows an autonomous drone **11780** with multiple modes of mobility, optionally including flight, rolling and walking modes of mobility. In embodiments, telescoping and articulating robotic legs allow positioning on uneven surfaces. In embodiments, the drone may have four wheels. The various mobile platforms may include articulating legs can pull up and away to allow rolling on wheels on smooth surfaces. The legs may include end members (e.g., "feet") that may be enabled with various forms of attachment by which the drone may attach to an element of its environment, such as a landing spot on a piece of industrial equipment proximal to a point of sensing (e.g., near a set of bearings of a rotating component). The end members may be enabled with various forms of attachment, such as magnetic attachment, suction cups, adhesives, or the like. In embodiments, the drone may have multiple forms that can be engaged by alternative mechanisms on end members (e.g., rotating between elements with different attachment types) or that can be retrieved by the articulating legs from a storage location on the drone. In embodiments, the drone **11780** may have a robotic arm **11782** that has the ability to place an adhesive-backed hook and loop fastener element onto a machine to allow attachment, disengagement and reattachment by the drone at a desired landing point. Placement may be undertaken under control of a vision system, which may include a remote-control vision or other sensing system and/or an automated landing system that recognizes a type of landing point and automatically, optionally with pattern recognition and machine learning, can land the drone and initiate attachment. Placement may be based both on the recognition (including by machine vision or sensor-based recognition) of an appropriate sensing location (such as based on an identified need for sensing, a trigger or input, or the like) and of an appropriate landing position (such as where the drone can establish a stable attachment and reach the point of sensing, such as with an articulating robotic arm). In embodiments, a camera system and other sensors can detect surface geometry and characteristics to select appropriate landing and engagement modes (e.g., a rough vertical surface, if recognized, can trigger use of legs and articulated fingers to hold on, while a smooth vertical surface, if recognized, can trigger use of suction cups or magnets to establish temporary attachment).

**[1242]** In embodiments, machine learning can vary and select landing and engagement modes by variation and selection, including testing security of various forms of attachment. Machine learning can be, or be initiated using, a set of rules for landing and engagement, a set of models (which may be populated with information about machines, infrastructure elements and other features of an industrial environment), a training set (including one created by having human operators land a set of drones and engage with sensors), or by deep learning approach fusing various vision and other sensors through a large set of trial landing and engagement events.

**[1243]** In embodiments, a camera **11788** may have object recognition capabilities (including pattern recognition improved by machine learning, rule-based pattern matching to library of images of machines and other features, or a hybrid or combination of techniques).

**[1244]** In embodiments, sensor-based recognition of industrial machines may be provided, where a machine is recognized based on sensor signatures (e.g., based on matching to known vibration patterns, heat signatures, sounds, and the like that characterize generators, turbomachines, compressors, pumps, motors, etc.). This may occur based on rules, models, or the like, with machine learning (including deep learning or learning based on human-generated training sets), or various combinations of these.

**[1245]** In embodiments, the mobile platforms may contain one or more multi-sensor data collectors (MDC) **11790** may be disposed on one or more articulating robotic arms **11782**, which may move from the interior to the exterior of the drone **11730**. In embodiments, the drone may have one or more of its own articulating robotic arm(s) **11782**, such as for picking up and placing individual sensors, attaching sensors to a point of sensing, attaching sensors to power sources, reading sensors, or the like.

**[1246]** In embodiments, the MDC **11790** can swap in and out various sensors, both at the point of sensing and by interacting with a central station **11792**, where the drone **11730** can replenish the MDC **11790** with new or different sensors, can re-stock any disposable or consumable elements (such as test strips, biological sensors, or the like) or the like. Replenishment and re-stocking can be undertaken with control elements described throughout this disclosure that involve selection of sensor sets, including rule-based, model-based, and machine learning control within an expert system.

**[1247]** In embodiments, a drone **11730** can be paired with the central station **11792**, such as for wireless re-charging, re-stocking of sensors, secure file downloads (e.g., requiring physical connection and verification), or the like. The central station **11792** may have network communication with a remote operator (including an expert system) and/or with local operators, such as via one or more applications, such as mobile applications, for controlling elements of the drone **11730** or central station **11792** or for reporting or otherwise using information collected by the drone **11730** or the central station **11792**.

**[1248]** In embodiments, the central station **11730** can have a 3D printer, such as for printing suitable connectors for interfacing with machines, for printing disposable or consumable elements used in sensors, for printing elements such as end members for assisting with landing, and the like.

**[1249]** In embodiments, the MDC **11790** has interface ports for various forms of interface, including physical interfaces (e.g., USB ports, firewire ports, lighting ports, and the like) and wireless interfaces (e.g., Bluetooth, Bluetooth Low Energy, NFC, WiFi and the like).

**[1250]** In embodiments, MDC **11790** interfaces can include electrical probes, such as for detecting voltages and currents, such as for detecting and processing operating signatures of electrical components of an industrial machine.

**[1251]** In embodiments, the MDC **11790** carries or accesses (such as within the drone **11730**, or the central station **11792**) various connectors to allow it to interface with a wide variety of machines and equipment.

**[1252]** In embodiments, the camera **11788** can identify a suitable interface port for an industrial machine and select and under user remote control or automatically (optionally under control of an expert system disposed on the drone **11730** or located remotely) use the appropriate connector for the interface port, such as to establish data communication (e.g., with an onboard diagnostic or other instrumentation system), to establish a power connection, or the like.

**[1253]** In embodiments, the robotic arm **11782** of the MDC **11790** can insert one or more cables or connectors as needed, such as ones retrieved from storage of the drone **11730** or from a central station. The central station can print a new connector interface as needed.

**[1254]** In embodiments, the drone **11730** is self-organizing and can be part of a self-organizing swarm that includes intelligent collective routing of several drones **11730** for data collection. The drone **11730** can have and interact with a secure physical interface for data collection, such as one that requires local presence in order to get access to control features.

**[1255]** The drone **11730** may use wireless communication, including by a cognitive, ad hoc mobile network of a mesh network of drones **11730**, which mesh network may also include other devices, such as a master controller (e.g., a mobile device with human interface).

**[1256]** In embodiments, the drone **11730** has a touch screen display for user interaction and mobile application interaction.

**[1257]** In embodiments, the drone **11730** can use the MDC **11790** to collect data that is relevant to placement of sensors for instrumentation of machines (e.g., collect vibration data from a set of possible locations and select a preferred location for data collection, then dispose a semi-permanent vibration sensor there for future data gathering).

**[1258]** Intelligent routing can include machine-based mapping, including referencing a pre-existing map or blueprint of an industrial environment and using machine learning to update the map based on detected conditions (e.g., detecting by camera, IR, sonar, LIDAR, etc., the presence of features, machines, obstacles, or the like, whether fixed or transient and updating the map and any relevant routes to reflect changing features).

**[1259]** In embodiments, the drone **11730** may include a facility for sensor-based detection of biological signatures (e.g., IR-sensing for base-level recognition of presence of humans, such as for safety), as well as other physiological sensors, such as for identity (e.g., using biometric authentication of a human before permitting access to collected data or control functions) and human status conditions (such as determining health status, alertness or other conditions of humans in the environment). In embodiments, the drone **11730** may store or handle emergency first aid items, such as for delivery to a point of emergency in case that an emergency health status is determined.

**[1260]** In embodiments, the drone **11730** can have collision detection and avoidance (LIDAR; IR, etc.), such as to avoid collisions with other drones **11730**, equipment, infrastructure, or human workers.

**[1261]** In another embodiment, the system in FIG. **157** is informed, based on a scheduled event, to evaluate the condition of various aspects of a factory floor. The system, configured with a learning algorithm, takes samples of various sensors in various positions. It is provided with positive reinforcement of a correctly operating factory floor on a regular basis. When there is a fault it will be instructed to evaluate the condition of various aspects and taught that there is a fault. It records the sensor data such as temperature, speed of motion, position sensors. It also integrates additional sensor data such as data from sensors that are integrated into the system to be analyzed, such as position, temperature, and structural integrity sensors integrated in a rail guide in an assembly line. These sensors communicate sensor data including real-time and historical sensor data to the system via a one of the network communication interfaces.

**[1262]** In another embodiment, the system in FIG. **157** has a robotic arm and carries with it numerous attachable modules each of which provides sensing of a different type of signal or data. For instance, the system may carry with it four modules, capable of sensing temperature, magnetic waves, lubricant contamination, and rust. It is capable of attaching and detaching and securely storing each type of module. The mobile drone **11730** is capable of returning to a charging station and selecting additional modules to measure additional types of signal. For instance, the system may receive an indication that a portion of a factory has a fault in the area where a vibrator is designed to shake tiny components into hopper which pours into a conveyer belt, which feeds into a pick-and-place robotic arm comprising gear boxes and actuators. The system, having received an indication that there is a failure mode such as a slowdown or jam in this general area, retrieves a chemical analysis module and tests the viscosity and chemical condition of the lubricant in the mechanical vibrator. It then retrieves a different chemical analysis module to analyze a different type of lubricant used in the gear box and actuator of the robotic arm. It then, delivering the data over a network interface and receiving an indication to continue testing, retrieves a new module capable of detecting mechanical faults as well as a visual camera module. Having retrieved these modules, the system then performs a visual analysis of the parts of the assembly line and sends them to a remote server (or keeps them locally) to be compared with historical pictures of the same portion of assembly line. The system continues in this way until all of the sensors which an external system has specified (such as a manually controlling human or a predetermined list) have been completed, or until one of the sensors detects an anomaly which is quantified and communicated to an external system to propose a repair.

**[1263]** FIG. **158** shows a drone data acquisition system which is movably attached to a track and which can, through translational motion and repositioning of a sensor arm, position itself in proximity to a portion of a system to be sensed and diagnosed for failure modes. The robotic arm **11782** is capable of positioning, for instance, a highly sensitive metallurgical fault detection system such as an x-ray or gamma-ray radiograph or a non-destructive scanning electron microscope. The robotic arm **11782** positions its sensing arm and measurement device in various positions on a static or dynamically moving target such as a set of rolling bearings in an assembly line. The robotic arm **11782** of the system performs high-resolution image capture and failure mode detection on the structural aspects of the roller

bearings such as detecting if there are any roller bearing failure modes such as pitting, bruising, grooving, etching, corrosion, etc. The system then communicates the findings of the failure mode detection to a remote system over a network interface.

**[1264]** In another embodiment, the data acquisition system of FIG. **158** continually performs a predetermined set of measurements over time and compares these measurements over time. For instance, it can measure the decibels of sound received at a precisely positioned directional sound input sensor aimed at each of a set of roller bearings over time. When, after some time a roller bearing diverges from the usual or common or specified decibel range for audio, the failure mode of that specific roller bearing is indicated, and the system then communicates the findings of the failure mode detection to a remote system over a network interface.

**[1265]** FIG. **159** shows a stationary guide rail **11800** in an industrial environment, and below it, a pair of ports **11802** including a network interface jack and a power port jack. A mobile data acquisition system such as a flying drone **11730** or wheeled sensor robot approaches the guide rail and uses a moving extension to "jack in" to the ports. At this point, the system can continue to operate indefinitely because it is in network communication and has continuous power. In embodiments, a remote operating user can now activate any of the sensors available to the mobile system and direct them to any reachable portion of the target, including the rail guide and any machinery moving on the guide. The rail guide can be chemically inspected, visually inspected, the portion of the assembly line in which the rail guide operates can be visually monitored by the remote user operating through the system sensor, the system can perform auditory testing of the machinery operating and moving along the rail guide. Any sensors embedded in the rail guide can communicate their sensor data to the attached roving system. Similarly, the sensor input from the attached roving system can be integrated with any embedded sensor data from the rail guide and delivered together with it over the wired network interface. Any drone **11730** connected to hover in proximity to the rail guide and its associated functionality can operate indefinitely and provide "zoomed in" monitoring of that portion of the assembly line. If a portion of an assembly line indicated a fault, a group of drones and wheeled data acquisition systems can be recruited to more closely monitor that area. In the case of a remote human operator, this additional sensor visibility affords them numerous real-time streams of sensor information on various aspects of the portion of the assembly line. The remote human operator can reposition and change the sensing modes of the various data acquisition systems. In another embodiment, a remote machine learning system operates the multiple sensing systems to zoom in and acquire additional data about the area of the assembly line that has been detected to be at fault. Through iterative trials and feedback, the machine learning system operates the data acquisition systems to test different signals with different sensors in different positions until one or more failure modes have been positively diagnosed. The machine learning system then takes appropriate action such as disabling that section of the assembly line to prevent loss of value from further damage, communicating to an on-site operator what the diagnosed fault was, automatically ordering the correct parts for delivery and creating a trouble ticket in a repair system, automatically calling a service technician to go to the location and repair the fault, estimating the total predicted downtime and automatically updating an accounting system with the modified throughput based on when the system will be producing again.

**[1266]** FIG. **160** shows a portion of the drive train **11810** and chassis of a vehicle **11812** such as a car or truck for transportation or an industrial vehicle such as a tractor for use in construction or farming. It consists of an engine **11814** a transmission **11818**, a propeller shaft **11820**, a rear differential gear box **11822**, axles, and wheel ends. The various sensor drones disclosed herein can sense, monitor, analyze and re-monitor the vehicle **11812**. The sensor drone **11730** may be airborne during its data recording. The sensor drone **11840** may be connected to the vehicle during the entire assembly process or at certain stations in the process. FIG. **163** shows a portion of a turbine **11900**. The various sensor drones disclosed herein can sense, monitor, analyze and re-monitor the turbine **11900**. The sensor drone **11730** may be airborne during its data recording. The sensor drone **11840** may be connected to the vehicle during the entire assembly process or at certain stations in the process. These various components are metallic and are subject to wear and damage from overuse and underuse outside their duty cycle and working output range. In order to operate this equipment and maintain these various components in proper order, numerous sensors are disposed throughout these. Conventionally, the most active elements such as the transmission contain numerous sensors which are used to operate the device correctly and provide feedback, but not necessarily to diagnose or monitor the health or failure modes of the device. These sensors include throttle position sensors, mass air flow sensors, brake sensors various pressure and temperature, and fluid level sensors. These same sensors along with numerous other additional sensors can be used not only for operation but for maintenance and diagnosis of the device. Additional sensors which can be permanently installed and distributed throughout include lubricant pollution chemical sensors such as solid-state sensors, gear position sensors, pressure sensors, fluid leak sensors, rotational sensors, bearing sensors, wheel tread sensors, visual sensors, audio sensors, and numerous other sensors listed herein.

**[1267]** FIG. **161** shows a micro, mobile magnetically driven attachable drone sensor system **11840** that attaches to metal and can be used to perform analysis of a vehicle in motion or at rest. It consists of a small rectangular or square mobile sensor unit which can be sized smaller than a matchbox. It has numerous wheels or castors or ball bearings and it attaches to metal using a permanent or electromagnet. It can be curved to mate more easily to curved surfaces such as a rear differential or drive or propeller shaft.

**[1268]** FIG. **162** shows a closer view of the mobile sensor system, showing its wheels and four sensors, an ultrasonic sensor, a chemical sensor, a magnetic sensor and a visual (camera) sensor. The system travels around and throughout the target area for failure mode detection, such as the undercarriage of a transportation or industrial vehicle. The sensor captures comprehensive data and is capable of covering the entire surface and undercarriage of the vehicle and can detect faults such as rusted out components, chemical changes, fluid leaks, lubricant leaks, foreign contamination, acids, soil and dirt, damaged seals, and the like. The sensor system reports this information over a network interface to another sensor, to a computer on the vehicle itself, or to a

remote system in order to facilitate data capture and ensure that the data is fully recorded. The system also runs on a periodic basis performing the same or similar coverage of the vehicle so that a baseline measurement can be compared with later measurements to determine the state of maintenance of the vehicle. This can be used to detect failure modes but can also be used to create an image of the vehicle for insurance, for depreciation, for maintenance scheduling, or surveillance purposes.

**[1269]** In embodiments, the mobile attaching drone sensor **11840** can be removably attached to a portion of a vehicle and can move freely around the undercarriage of a vehicle. It can also be placed there as a sensing module by the mobile robotic sensor system of FIG. **157** and subsequently retrieved when it has completed its sensing tasks.

**[1270]** In embodiments, the mobile attaching sensor **11840** may take the form of a swimming device that can travel through fluid, or a multi-pedal unit with chemically-adhesive or magnetic or vacuum-adhesive pods or feet that allow it to move freely on the surface of a target to be sensed.

**[1271]** In embodiments, the modular sensors shown in FIG. **157** can be removably or permanently integrated into mobile or portable sensors such as drones, multi-pedal or wheeled industrial measurement robots, or self-propelled floating, climbing, swimming, or magnetically crawling micro-data acquisition systems Any of the sensors can take multiple measurements from different positions on the same target to get a fuller picture of the health or condition of the target.

**[1272]** The sensors deployed on the various drones, mobile platforms, robots, and the like may take numerous forms. For instance, a set of roller bearing sensors may be integrated within the roller bearing itself, using the energy off the motion of the roller bearing to generate an inductive force sufficient to generate data signals to communicate to a data circuit the state of the roller bearing, such as velocity, rotations per unit time, as well as analog data indicating any minor perturbations in the smooth rotation of the bearing over time. A deformation sensor can take the form of a passive (visual, infrared) or active scanning (Lidar, sonar) system that captures data from a target and compares it to historical data on the shape or orientation of the component to detect variations. Camera sensors are configured with a lens to capture continuous and still visible and invisible photon information cast upon or reflected by a target. Ultraviolet sensors can similarly capture continuous and still frame information about a target and its surrounds. Infrared sensors can capture light and heat emission data from a target. Audio sensors such as directional and omnichannel microphones can measure the frequency and amplitude of sonic wave data emitting from a target or its environment, and this data can be compared over time to detect anomalies when the amplitude or quality of the sound generated by the target exceeds or varies from predetermined or historical levels. Vibration sensors can be used in a similar manner, capturing extremely low frequency sound as well as physical perturbations and rhythms of a target over time. Viscosity sensors can be installed in-line in the lubrication system of a system or vehicle or can be movable and make ad-hoc measurements and evaluations of the continuous or instantaneous viscosity of the lubricating material for a target. Chemical sensors can vary widely in what analyte (target chemical) they detect, and in the case of vehicles or stationary machinery, can be configured with variable receptors capable of capturing and recognizing numerous conditions of a target. Specific target sensors such as rust sensors or overheat sensors can sense when a target such as an apparatus, metal structure or chemical lubricant has started to change chemically over time. These chemical sensors can be multi- or single-purpose, and can be integrated within a structure, such as the frame or chassis of a vehicle or the stationary or movable portions of an assembly line, or the mechanical motive power of an engine or robotic machinery. Or they can be attached to a portable self-propelled data acquisition system that is deployed to measure the target. When activated these chemical sensors make contact or take samples from the target and perform chemical analysis and report the state of the results to a data circuit. A solid chemical sensor can take solid chemical samples (rather than gaseous or liquid samples) and determine the presence of a particular chemical or the composition by detecting multiple chemicals in a sample. A pH sensor can be used to detect the level of acidity of a target and can be used to determine specific changes in the environment of a target, the fluid conditions surrounding a target, or the state of an operational fluid such as a coolant or lubricant in a target, and similarly, fluid, and gaseous chemical sensors perform additional component and presence detection on these targets. A lubricant sensor can be as simple as an indicator of whether sufficient lubricant is still present (by detecting chafing or a lack of distance between conductive or hard components) or can use a combination of chemical, pressure, visual, olfactory, or vibrational feedback tests (vibrating the target and measuring response) to determine the instant or continuous presence or quantity of lubricant in a target. Contaminant sensors can look for the presence of foreign or damaged elements added to the surface, substance or fluid contents of a target, such as a lubricant which has been contaminated with metal particles from component wear, or when a lubricant or motive fluid such as in a pneumatic has been contaminated due to the breaking of a seal. Particulate sensors can detect the presence of specific types of particles within a fluid or on a target. Weight or mass sensors can determine the continuous or changing weight of a component, and can be on coarse scale such as a weighing device for weighing large machinery down to an integrated MEMS scale that determines the continuous and instantaneous changes in weight of a target that may lose mass over time due to damage or abrasion or evaporation, sublimation, etc. A rotation sensor can be optical, audio-based, or use numerous other techniques to detect the periodic acceleration, velocity, and frequency of rotation of a target. Temperature sensors can be configured to measure coarse environmental temperature in a general area as well as fine environmental temperatures, precise temperature of a region of a target component and can be disposed throughout an engine, a robotic system, or any stationary or moving component. Temperature sensors can also be mobile and deployed to take periodic or ad-hoc measurements of a target component, surface, material, or system to determine if it is operating in a correct temperature range. Position sensors can be as simple as interrupted visual reflections, to visual systems with image-recognition algorithms being performed on continuous video, to magnetic or mechanical switch systems that durably detect either precisely or coarsely the position of various moveable elements with respect to one another. Ultrasonic sensors can be used for a variety of distance, shape, solidity, and orientation measurements by

projecting ultrasonic energy in the direction of a target or group of targets or measuring the reflected ultrasonic energy reflected by those targets. Ultrasonic sensors may comprise multiple emitters and receivers in order to add dimensions and precision to the measurements and even produce 2D or 3D outlines of a region for further analysis. A radiation sensor can detect the presence of forms of radioactivity as alpha, beta, gamma, or x-ray radiation and some can identify the directional source, the field and area of the radiation and the intensity. An x-ray radiograph can actively determine structure, structural changes and structural defects as well as providing a visual depiction of otherwise obscured physical characteristics of a target. Similarly, a gamma-ray radiograph can be used to penetrate solid targets such as steel or other metallic objects and so determine the characteristics of physical features such as joints, welds, depths, rough edges, and thicknesses in load bearing and pressurized targets. Various forms of high-resolution scanning technologies exist including scanning tunneling microscopes, photon tunneling microscope, scanning probe microscopes, and these measurement devices have been miniaturized and non-destructive forms of these devices can be brought in contact with a target to be measured, such as via a movable robot or drone **11730**, and then used to perform extremely high resolution (atomic-scale) measurements and analysis of the structure and characteristics of a target. A displacement meter can be implemented using capacitive effects, mechanical measurement or laser measurement and can be used similarly to a position meter to measure the location of a movable target and can be used, for instance, to measure the 'play' or changing displacement of a wearing physical target over time. A magnetic particle inspector can be used to determine if a fluid such as a lubricant, an immersive fluid container, a coolant, or a pneumatic fluid, for instance, contain trace elements of ferromagnetic particles, which could be an indication of the decay or failure of a metal component. An ultraviolet particle detector can be used to detect contamination such as in gaseous targets. A load sensor such as a static load sensor (measuring systems at rest) or an axial load sensor that detects, such as magnetically, the pushing and pulling forces along a beam and can be used to determine the forces on an axle or other torque-transmitting tube or shaft. An accelerometer can be microscopic in size, implemented as a MEMS device, or packaged as a larger industrial device and can provide multiple dimensions of acceleration and gravitation data about or in proximity to a target, and can be useful for instance to detect if a device is level, or in addition to other data collection, the amount of force being applied to a target over time. A speed sensor can be used to measure translational, displacement or rotational velocity or speed. A rotational sensor can be used to measure the speed, period, frequency, even or uneven motion of a rotating element such as a tire, a gear, an armature, or a gyro. A moisture sensing device can detect the liquid, condensation or H2O content of the target or its environment. A humidity sensor can measure the degree of water vapor in the atmosphere in the vicinity of a target. Ammeters, voltmeters, flux meters, and electric field detectors can be used to measure electromagnetic effects, fields and levels of a target or in the vicinity of a target, or the electronic or magnetic emission of a target, or the potential energy stored in a target. A gear box sensor can measure numerous attributes of an industrial gear box for general translation of motive power in a robotic or assembly line environment as well as numerous complex vehicular gear assemblies including vehicle transmissions and differentials Measurements can include the precise position of all internal gears, the state of wear of gear elements and teeth, various chemical, temperature, pressure, contamination, coolant level, fluid level, vacuum level, seal level, torsion, torque, force, shear stress, cycle count, tooth gap, wear, and any other changing physical attribute. A gear wear sensor and "tooth decay" sensor can specifically measure and convey the degree to which gears have worn down or that the teeth of the gears have been chipped, cracked, flaked off or otherwise reduced from original condition, and this can be accomplished through visual or other emitting signal sensors, audio sensors (measuring change in sonic quality based on the change in impact of teeth), laser sensors (measuring the periodic interruption of a precise beam across each gear path), power transmission measurement (measuring loss of power from one gear to the next via torque or force measurement) and numerous other techniques. A transmission input speed sensor measures the rotational velocity of the shaft entering the transmission and can do this with rotational position sensors plotted against time. Transmission output speed sensors measure the rotational velocity of the shaft delivering motive force out of the transmission. A manifold airflow sensor or mass air flow sensor can be used to measure the air density or intake airflow of an engine and thus determine the amount of engine load, torque, or power output. Other types of engine load sensors can be used to determine how much power or torque is being delivered from an engine, such as by measuring the delivered axle speed vs. the expected axle speed or by measuring the work being produced. A throttle position sensor measures the position of an engine throttle regulating the amount of fuel and air entering an engine, and can be measured using various techniques such as hall effect sensing, inductive, mechanical position sensing, magneto resistive sensing, and other techniques. A coolant temperature sensor measures the coolant temperature in various positions, over time or instantaneously in a liquid or gas cooled target system. A speed sensor can measure rotational or linear speed or speed of an overall vehicle over a path or a moving part in rotational or translational motion. A brake sensor can measure various aspects of a vehicular or robotic braking system the degree to which a brake activation switch (such as a vehicular brake pedal) is depressed, or the degree to which a brake is activated or the degree to which a brake is making frictional or other speed-suppressing contact with the motion system. A fluid temperature sensor can measure the temperature of any fluid such as a gaseous, pressurized, lubricant, cooling, fuel, or transported substance and can measure it in a single location or in various locations throughout the body of the fluid, and such measurements can be achieved through integrated contact sensors, dispersed contact sensors around the perimeter of a container, or through active or passive measurement such as infrared sensing or measuring the effect of applied energy to a portion of a fluid and the reflected or measured effect, such as with a laser thermometer. An emitting thermometer tool can be directed to various portions of a three-dimensional fluid chamber to be measured. A tool load sensor can be used to determine the amount of power being delivered from a tool and the resistance of the moving parts against the expected unloaded power of that device. A bearing sensor can measure the forces in portions or throughout or at periodic intervals in a

bearing and thus allow a system to measure the change in these forces over time, as well as measure other aspects of a mechanical bearing such as position, service life, rotational count, change in average velocity, sonic changes, vibrational changes, chemical changes, color changes, surface changes, contamination changes, and numerous other attributes relevant to change of the bearing and its potential performance over time. A standstill counter can measure when and how often and for how long and how rapidly a movable target is stationary and in what internal position (as in a rotational or movable element) or relative position (as in a device that interfaces with another device) the moveable target is holding still, which can amongst other things indicate a location where a device, by sitting in that specific position may develop a fault or unwanted physical asymmetry. A hydraulic pump or power unit sensor can sense the pressure within the hydraulic fluid that provides power and also help detect, based on non-linearity or other specific signals that the hydraulic fluid is aged, compromised, contaminated, oxygenated or otherwise at fault. Hydraulic pump and power unit sensors can also sense other aspects of a pump or power unit including service duration, displacement, current position, divergence from duty cycle, change in range of motion or velocity curve of motion over time, resistance, fluid temperatures and chemical state of the fluid enclosure, enclosure integrity, and other intrinsic aspects of the pump. An oxygen sensor can sense the presence, quantity, or density of oxygen in the environment or in a target container. Gas sensors can detect specific types of gas compositions using either a consumable chemical reagent or a solid-state chemical sensor and can detect the presence, quantity or density of a particular gas or combination of gasses in an environment or target container. Oil sensors can detect the presence of oil, its viscosity, its level of pollution, and its pressure in a target area or container. A chemical analysis sensor can use consumable or permanent sensors to analyze a sample and determine the presence of a single chemical molecule or element or the composition of a sample and the specific multiple chemicals that make it up and their relative quantities. Chemical analysis sensors use various techniques including spectral analysis, exposure to lights, combination with consumable test strips, solid-state chemical sensors, and other techniques to establish the chemical makeup of a target. Pressure detectors can detect the pressure in an environment (such as barometric pressure) or can be movably linked to an openable shaft such as with an inflatable object or tire with a tire stem or a pneumatic device or a gas-filled device such as a refrigerant unit, and can measure the pressure therein. Pressure detectors can also be permanently installed within a compressed or vacuum chamber and communicate their measurements through a wired or wireless channel. A vacuum detector can measure the level the relative state of pressure of the interior and can also produce a result simply indicative of whether a predetermined level of vacuum exists in a chamber. A densitometer can measure the optical density e.g., degree of darkness of a sample, by projecting one or more forms of light on it and measuring absorption. A torque sensor can measure the dynamic or static torque of a rotating element using techniques such as magneto elastic sensing, strain gauges, or surface acoustic waves. Engine sensors can measure numerous aspects of an engine, including pressures, temperatures, relative positions, velocities, accelerations, fluid dynamics, power transfer, and numerous other states in a vehicle or other power-generating engine. Exhaust and exhaust gas sensors can measure the output of an exhaust system for attributes such as relative chemical composition, presence of specific chemicals, pressure, velocity, quantity of specific particles, particle count, and quantity of specific pollutants. Exhaust sensors can be disposed within the one or more pipes or channels through which exhaust exits, and can be composed of numerous different sensors including catalytic sensors, optical sensors, mechanical and chemical sensors that analyze the exhaust. A crankshaft sensor or crankshaft position sensor can use optical, magnetic, electrical, electromechanical, or other techniques to establish and report the real-time velocity of a crankshaft or its position relative to other components including the specific position of the pistons in a reciprocating motor. A camshaft position sensor can use optical, magnetic, electrical, electromechanical, or other techniques to establish the position of the camshaft and can feed this back to ignition and fuel delivery systems in a feedback loop as well as provide the information to an external system for analysis. A capacitive pressure sensor uses capacitive electrical effects to measure the pressure inside a target chamber. A piezo-resistive sensor can be used to measure strain and distortion of surfaces and devices under load. A wireless sensor can encompass a wide range of different sensing units that deliver the information they sense over a wireless connection. A wireless pressure sensor performs pressure sensing and delivers the results over a wireless connection. A fuel sensor can use pressure, optical sensing, mechanical sensing with a float, weight, or displacement sensing to determine the level of fuel within a tank, and other types of fuel sensors can sense fuel flow as it passes through a channel or into a chamber. A gyro sensor can measure angular or rotational velocity and can produce signals useful for physical stabilization and motion sensing. Mechanical position sensors measure physical displacement, angular displacement, relative position or orientation using mechanical, optical, magnetic, electrical, or other sensing techniques. MEMS (Micro-electrical-mechanical) are microfabricated sensors which can be integrated into objects to be measured or integrated in mobile sensing devices and MEMS sensors encompass various sensing devices including pressure sensors, magnetic field sensing, accelerometers, fluid quantity sensors, microscanning sensors, micromirror steering devices for sensing, ultrasound transducing, as well as MEMS devices that harvest energy which can be used to power the transmission of sensor data. An injector sensor may sense characteristics of a fuel delivery such as the quantity, speed, or timing of fuel injection. An NOx sensor detects the pollutant nitrogen oxide such as in exhaust systems. A variable valve timing sensor can be used in feedback systems to verify and help control the timing of valve lifting in an engine equipped with variable valve control for fuel efficiency and performance optimization A tank pressure sensor can detect evaporative leaks in a gasoline or diesel fuel tank due to an absent gas cap, and in other tank applications such as pressurized tanks can detect how full a gaseous tank is. A fuel flow sensor is a specialized fluid flow sensor, both of which can measure the quantity of a gas or liquid passing through a region in a unit time, such as water or fuel or gasses in a pipe or flue. An oil pressure sensor can be located in various places in an engine, transmission, gearbox, or other sealed lubricating system to help determine the performance and sufficiency of the lubricant. A damper sensor or throttle position sensor

measures the position of a partial valve system and can measure the degree of flow permitted in an intake, exhaust and other flow damper or throttle engine or industrial system. A particulate sensor or particulate matter sensor can detect specific air quality conditions such as the presence of particulates and dust. An air temperature sensor can be located in various portions of an engine to receive data that can help optimize the air/fuel mixture in an engine. A coolant temperature sensor can sense the temperature of coolant passing through an area or stored in a chamber and help determine if a cooling system is operating as intended. An in-cylinder pressure sensor can capture data about the instantaneous pressure in a motor cylinder and so optimize the combustion in an engine. An engine speed sensor can sense the rotational motion of the crankshaft using optical or magneto-electric sensing. A knock sensor uses vibration sensing to measure the magnitude and timing of detonation in an engine and can be used to adjust the ignition timing. A drive shaft sensor can measure numerous aspects of a power-delivering shaft including angular velocity, power transfer, and may incorporate specific sensors for various modes of vibration such as a torsional vibration sensor, a transverse vibration sensor, a critical speed vibration sensor which detects vibration at the natural frequency of the object leading to failure modes, and a component failure vibration sensor which can detect failure modes in u-joints or bolts. An angular sensor can measure the angular position of a mechanical body with respect to a reference point. A powertrain sensor encompasses various sensors throughout the engine-transmission-driveshaft-differential-wheel system. An engine sensor can include a power sensor encompassing various sensors that detect the level of power being delivered by the engine. Engine oil sensors can sense oil pressure, temperature, viscosity, and flow. A load sensor can sense weight or strain in a static configuration. A frequency sensor can measure various frequencies or provide positive confirmation that a signal or input is maintaining a particular frequency. A transfer case sensor in four-wheel or all-wheel drive vehicles can detect the position of the gears (high or low). A differential sensor such as a rear wheel speed sensor indicates the axle speeds of the rear wheels, such as for an antilock braking system. Various other sensors in the rear differential can detect conditions such as lubricant sufficiency, seal, power transfer, slip, etc., A tire pressure gauge is a specialized form of pressure gauge and can be integrated with a hub or rim in the valve stem or can be non-integrated and connected to the valve stem as needed. A tire damage gauge can sense pressure loss, traction loss, or using other sensor techniques determine various attributes of a tire such as wear, tear, balding, splitting, puncture, and the like. A tire vibration or balance sensor can sense when a wheel is not smoothly rotating. Hub and rim integrity sensors can measure and detect the structural integrity and stability of wheels through chemical, electromagnetic, optical, or visual sensing. Air, fluid and lubricant leak sensors can detect the loss of air or fluid through various means including pressure change over time, visual detection of a puncture, emission of gas or liquid from the exterior of the containing vessel, or temperature gradient detection such as with infrared sensing. Lubricant leak sensors can also detect a loss of lubricant through increased noise due to abrasion, fine measures of distances and contacts between parts, vibrations, and off-balance motions in a system.

**[1273]** The sensors described herein can deliver their instantaneous or continuous sensor data via numerous data transmission techniques, including techniques such as low-distance wireless transmission where the power to emit the transmission is provided by an inductive or mechanical generator which is powered by the motion or energy being sensed. The sensor data can be delivered via a single wire or even body-current transmission protocol over any practical energy emission device. For instance, a pressure sensor embedded within a ferrometallic block could use the fluctuations in temperature to induce a tiny magnetic flux in the block, which flux is then measured in another area of the block by a sensor communicating via a conventional Wi-Fi or Ethernet network. MEMS devices integrated in the sensing components can perform energy harvesting in order to power the transmission of the sensor data over a network.

**[1274]** In embodiments, a system for data collection in an industrial environment having a self-sufficient data acquisition box for capturing and analyzing data in an industrial environment comprises a data circuit for analyzing a plurality of sensor inputs, a network communication interface, a network control circuit for sending and receiving information related to the sensor inputs to an external system and a data filter circuit configured to dynamically adjust what portion of the information is sent based on instructions received over the network communication interface. In embodiments, the data circuit is configured to analyze data indicative of a fatigue or wear failure mode in a roller bearing assembly such as rust, micropitting, macropitting, gear teeth breakage, fretting, case-core separation, plastic deformation, scuffing, polishing, adhesion, abrasion, subcase fatigue, erosion, corrosion, electric discharge, cavitation, cracking, scoring, profile pitting, and spalling.

**[1275]** In embodiments, the data circuit is configured to analyze data indicative of a fatigue or wear failure mode in a gear box such as micropitting, macropitting, gear tooth wear, tooth breakage, spalling, fretting, case-core separation, plastic deformation, scuffing, polishing, adhesion, abrasion, subcase fatigue, erosion, electric discharge, cavitation, rust, corrosion, and cracking.

**[1276]** In embodiments, the data circuit is configured to analyze data indicative of a fatigue or wear failure mode in a hydraulic pump such as fluid aeration, overheating, overpressurization, lubricating film loss, depressurization, shaft failure, vacuum seal failure, large particle contamination, small particle contamination, rust, corrosion, cavitation, shaft galling, seizure, bushing wear, channel seal loss, and implosion.

**[1277]** In embodiments, the data circuit is configured to analyze data indicative of a fatigue or wear failure mode in an engine such as imbalance, gasket failure, camshaft, spring breakage, valve breakage, valve scuffing, valve leakage, clutch slipping, gear interference, belt slipping, belt teeth breakage, belt breakage, gear tooth failure, oil seal failure, aftercooler, intercooler, or radiator failure, rod failure, sensor failure, crankshaft failure, bearing seizure, overload at low RPM, cranking, full stop, high RPM, overspeed, piston disintegration, shock overload, torque overload, surface fatigue, critical speed failure, weld failure, and material failures including micropitting, macropitting, gear teeth breakage, fretting, case-core separation, plastic deformation, scuffing, polishing, adhesion, abrasion, subcase fatigue, rust, erosion, corrosion, electric discharge, cavitation, cracking, scoring, profile pitting and spalling.

**[1278]** In embodiments, the data circuit is configured to analyze data indicative of a fatigue or wear failure mode in a vehicle chassis, body or frame such as imbalance, gasket failure, spring breakage, lubricant seal failure, sensor failure, bearing seizure, shock overload, surface fatigue, weld failure, spring failure, strut failure, control arm failure, kingpin failure, tie-rod and end failure, pinion bearing failure, pinion gear failure, and material failures including micropitting, macropitting, fretting, rust, erosion, corrosion, electric discharge, cavitation, cracking, scoring, profile pitting and spalling.

**[1279]** In embodiments, the data circuit is configured to analyze data indicative of a fatigue or wear failure mode in a powertrain, propeller shaft, drive shaft, final drive, or wheel end, such as imbalance, gasket failure, camshaft failure, gear box failure, spring breakage, valve breakage, valve scuffing, belt teeth breakage, belt breakage, gear tooth failure, oil seal failure, rod failure, sensor failure, crankshaft failure, bearing seizure, overload at low RPM, cranking, full stop, high RPM, overspeed, piston disintegration, shock overload, torque overload, surface fatigue, critical speed failure, yoke damage, weld failure, u-joint failure, CV joint failure, differential failure, axle shaft failure, spring failure, strut failure, control arm failure, kingpin failure, tie-rod & end failure, pinion bearing failure, ring gear failure, pinion gear failure, spider gear failure, wheel bearing failure, and material failures including micropitting, macropitting, gear teeth breakage, fretting, case-core separation, plastic deformation, scuffing, polishing, adhesion, abrasion, subcase fatigue, rust, erosion, corrosion, electric discharge, cavitation, cracking, scoring, profile pitting and spalling.

**[1280]** In embodiments, the sensor input can be a roller-bearing sensor, deformation sensor, camera, ultraviolet sensor, infrared sensor, audio sensor, vibration sensor, viscosity sensor, chemical sensor, contaminant sensor, particulate sensor, weight sensor, rotation sensor, temperature sensor, position sensor, ultrasonic sensor, solid chemical sensor, pH sensor, fluid chemical sensor, lubricant sensor, radiation sensor, x-ray radiograph, gamma-ray radiograph, scanning tunneling microscope, photon-tunneling microscope, scanning probe microscope, laser displacement meter, magnetic particle inspector, ultraviolet particle detector, load sensor, static load sensor, axial load sensor, accelerometer, speed sensor, rotational sensor, moisture, humidity, ammeter, voltmeter, flux meter, and electric field detector, gear box sensor, gear wear sensor, "tooth decay" sensor, rotation sensors, transmission input sensor, transmission output sensor, manifold airflow sensor (determines engine load and thus affects gearbox), engine load sensors, throttle position sensor, coolant temperature sensor, speed sensor, brake sensor, fluid temperature sensor, tool load sensor, bearing sensor, standstill counter, hydraulic pump sensor, oxygen sensors, gas sensors, oil sensors, chemical analysis, pressure detector, vacuum detector, densitometer, torque sensor, engine sensor, exhaust sensors, exhaust gas sensor, crankshaft position sensor, camshaft position sensor, capacitive pressure sensor, piezo-resistive sensor, wireless sensor, wireless pressure sensor, chemical sensors, oxygen sensor, fuel sensor, gyro sensor, mechanical position sensors, accelerometer, mems sensors, digital sensors, mass air flow sensor, manifold absolute pressure sensor, throttle control sensor, injector sensor, NOx sensor, variable valve timing sensor, tank pressure sensor, fuel level sensor, fuel flow sensor, fluid flow sensor, damper sensor, torque sensor, particulate sensor, air flow meter, air temperature sensor, coolant temperature sensor, in-cylinder pressure sensor, engine speed sensor, knock sensor, drive shaft sensor, angular sensor, transverse vibration sensor, torsional vibration sensor, critical speed vibration sensor, powertrain sensor, engine sensors: power sensor, oil pressure, oil temperature, oil viscosity, oil flow sensor, load sensor (structural analysis), vibration sensor, frequency sensor, audio sensor, transfer case sensor, differential sensor, tire pressure gauge, tire damage gauge, tire vibration sensor, hub and rim integrity sensors, air leak sensors, fluid leak sensors, and lubricant leak sensors.

**[1281]** In embodiments, the sensor inputs additionally comprise microphones or vibration sensors configured to detect vibrational or audio-frequency conditions in movable or rotational components, such as whirring, howling, growling, whining, rumbling, clunking, rattling, wheel hopping, and chattering.

**[1282]** In embodiments, the data circuit is configured to analyze data indicative of a fatigue or wear failure mode in a production line gear box, such as micropitting, macropitting, gear tooth wear, tooth breakage, spalling, fretting, case-core separation, plastic deformation, scuffing, polishing, adhesion, abrasion, subcase fatigue, erosion, electric discharge, cavitation, corrosion, and cracking.

**[1283]** In embodiments, the data circuit is configured to analyze data indicative of a fatigue or wear failure mode in a production line vibrator such as moisture penetration, contamination, micropitting, macropitting, gear tooth wear, tooth breakage, spalling, fretting, case-core separation, plastic deformation, scuffing, polishing, adhesion, abrasion, subcase fatigue, rust, erosion, electric discharge, cavitation, corrosion, and cracking.

**[1284]** In embodiments, analyzing comprises detecting anomalies in the received data. In embodiments, the data filter circuit executes stored procedures to create digests of the information. In embodiments, the system discards the data underlying the digests of the information after a user-configurable time period.

**[1285]** In embodiments analyzing comprises determining what data to store, determining what data to transmit, determining what data to summarize, determining what data to discard, or determining the accuracy of the received data.

**[1286]** In embodiments, the system is configured to communicate with a plurality of other similarly configured systems and store the information when the amount of storage used by the system exceeds a threshold.

**[1287]** In embodiments, the system is configured to execute the instructions received via the network communication interface using a virtual machine.

**[1288]** In embodiments, the system further comprises a digitally signed code execution environment to decrypt and run the instructions it receives via the network interface.

**[1289]** In embodiments, the system further comprises multiple distinct cryptographically protected memory segments.

**[1290]** In embodiments, the at least one of the memory segments is made available for public interaction with the stored data via a public key-private key management system.

**[1291]** In embodiments, the system further comprises a conditioning circuit for converting signals to a form suitable for input to an analog-to-digital converter.

**[1292]** In embodiments, a system for data collection in an industrial environment having a self-sufficient data acquisition box for capturing and analyzing data in an industrial

process, comprises a data circuit for analyzing a plurality of sensor inputs, a network control circuit for sending and receiving information related to the sensor inputs to an external system, and a storage device, where the data circuit continuously monitors sensor inputs and stores them in an embedded data cube and where the data acquisition box dynamically determines what information to send based on statistical analysis of historical data.

**[1293]** In embodiments, the system further comprises a plurality of network communication interfaces. In embodiments, the network control circuit bridges another similarly configured system from one network to another using the plurality of network communication interfaces. In embodiments, the analyzing further comprises detecting anomalies in the information. In embodiments, the data circuit executes stored procedures to create digests of the information. In embodiments, the data circuit supplies digest data to one client and non-digest data to another client simultaneously. In embodiments, the data circuit stores digests of historical anomalies and discards at least a portion of the information. In embodiments, the data circuit provides client query access to the embedded data cube in real time. In embodiments, the data circuit supports client requests in the form of a SQL query. In embodiments, the data circuit supports client requests in the form of a OLAP query. In embodiments, the system further comprises a conditioning circuit for converting signals to a form suitable for input to an analog-to-digital converter.

**[1294]** In embodiments, a system for data collection in an industrial environment having a self-sufficient data acquisition box for capturing and analyzing data in an industrial process comprises a data circuit for analyzing a plurality of sensor inputs, and a network control circuit for sending and receiving information related to the sensor inputs to an external system, the system is configured to provide sensor data to a plurality of other similarly configured systems, and the system dynamically reconfigures where it sends data and the and the quantity it sends based on the availability of the other similarly configured systems.

**[1295]** In embodiments, the system further comprises a plurality of network communication interfaces. In embodiments, the network control circuit bridges another similarly configured system from one network to another using the plurality of network communication interfaces. In embodiments, the dynamic reconfiguration is based on requests received over the one or more network communication interfaces. In embodiments, the dynamic reconfiguration is based on requests made by a remote user. In embodiments, the dynamic reconfiguration is based on an analysis of the type of data acquired by the data acquisition box. In embodiments, the dynamic reconfiguration is based on an operating parameter of at least one of the system and one of the similarly configured systems. In embodiments, the network control circuit sends sensor data in packets designed to be stored and forwarded by the other similarly configured systems. In embodiments, when a fault is detected in the system, the network control circuit forwards a at least a portion of its stored information for to another similarly configured system. In embodiments, the network control circuit determines how to route information through a network of similarly configured systems connected, based on the source of the information request. In embodiments, the network control circuit decides how to route data in a network of similarly configured systems, based on how frequently information is being requested. In embodiments, the decides how to route data in a network of similarly configured systems, based how much data is being requested over a given period. In embodiments, the network control circuit implements a network of similarly configured systems using an intercommunication protocol such as multi-hop, mesh, serial, parallel, ring, real-time and hub-and-spoke. In embodiments, after a configurable time period, the system stores only digests of the information and discards the underlying information. In embodiments, the system further comprises a conditioning circuit for converting signals to a form suitable for input to an analog-to-digital converter.

**[1296]** In embodiments, a system for data collection in an industrial environment having a self-sufficient data acquisition box for capturing and analyzing data in an industrial process, comprises a data circuit for analyzing a plurality of sensor inputs, a network control circuit for sending and receiving information related to the sensor inputs to an external system, where the system provides sensor data to one or more similarly configured systems and where the data circuit dynamically reconfigures the route by which it sends data based on how many other devices are requesting the information.

**[1297]** In embodiments, the system further comprises a plurality of network communication interfaces. In embodiments, the network control circuit bridges another similarly configured system from one network to another using the plurality of network communication interfaces. Where the network control circuit implements a network of similarly configured systems using an intercommunication protocol such as multi-hop, mesh, serial, parallel, ring, real-time and hub-and-spoke. In embodiments, the system continuously provides a single copy of its information to another similarly configured system and directs requesters of its information to the another similarly configured system. In embodiments, the another similarly configured system has different operational characteristics than the system. In embodiments, the different operational characteristics can be power, storage, network connectivity, proximity, reliability, duty cycle. In embodiments, after a configurable time period, the system stores only digests of the information and discards the underlying information.

**[1298]** In embodiments, a system for data collection in an industrial environment having a self-sufficient data acquisition box for capturing and analyzing data in an industrial process comprises a data circuit for analyzing a plurality of sensor inputs, a network control circuit for sending and receiving information related to the sensor inputs to an external system, where the system provides sensor data to one or more similarly configured systems and where the data circuit dynamically nominates a similarly configured system capable of providing sensor data to replace the system.

**[1299]** In embodiments, the nomination is triggered by the detection of a system failure mode. In embodiments, when the system is unable to supply a requested signal it nominates another similarly configured system to supply similar but not identical information to a requestor. In embodiments, the system indicates to the requestor that the new signal is different than the original. In embodiments, the network control circuit implements a network of similarly configured systems using an intercommunication protocol such as multi-hop, mesh, serial, parallel, ring, real-time and hub-and-spoke. In embodiments, after a configurable time

period, the system stores only digests of the information and discards the underlying information. In embodiments, the network control circuit self-arranges the system into a redundant storage network with one or more similarly configured systems. In embodiments, the network control circuit self-arranges the system into a fault-tolerant storage network with one or more similarly configured systems. In embodiments, the network control circuit self-arranges the system into a hierarchical storage network with one or more similarly configured systems. In embodiments, the network control circuit self-arranges the system into a hierarchical data transmission configuration in order to reduce upstream traffic. In embodiments, the network control circuit self-arranges the system into a matrixed network configuration with multiple redundant data paths in order to increase reliability of information transmission. In embodiments, the network control circuit self-arranges the system into a matrixed network configuration with multiple redundant data paths in order to increase reliability of information transmission. In embodiments, the system accumulates data received from other similarly configured systems while an upstream network connection is unavailable, and then sends all accumulated data once the upstream network connection is restored. In embodiments, the accumulated data is committed to a remote database. In embodiments, the system rearranges its position in a mesh network topology with other similarly configured systems in order to minimize the amount of data it must relay from the other systems. In embodiments, the system rearranges its position in a mesh network topology with other similarly configured systems in order to minimize the amount of data it must send through other the other systems.

**[1300]** In embodiments, a system for data collection in an industrial environment having a self-sufficient data acquisition box for capturing and analyzing data in an industrial process comprises a data circuit for analyzing a plurality of sensor inputs, a network control circuit for sending and receiving information related to the sensor inputs to an external system, where the system provides sensor data to one or more similarly configured systems and where the system and the one or more similarly configured systems are arranged as a consolidated virtual information provider.

**[1301]** In embodiments, the system and each of the similarly configured systems multiplex their information. In embodiments, the system and each of the similarly configured systems provide a single unified information source to a requestor. In embodiments, the system and each of the similarly configured systems further comprise an intelligent agent circuit that combines the data between systems. In embodiments, the system and each of the similarly configured systems further comprise an intelligent agent circuit that chooses what data to collect or store based on a machine learning algorithm. In embodiments, the machine learning algorithm further comprises a feedback function that takes as input what data is used by an external system. In embodiments, the machine learning algorithm further comprises a control function that adjusts the degree of precision, frequency of capture, or information stored based on an analysis of requests for data over time. In embodiments, the machine learning algorithm further comprises a feedback function that adjusts what sensor data is captured based on an analysis of requests for information over time. In embodiments, the machine learning algorithm further comprises a feedback function that adjusts what sensor data is captured based on historical use of information. In embodiments, the machine learning algorithm further comprises a feedback function that adjusts what sensor data is captured based on what information was most indicative of a failure mode. In embodiments, the machine learning algorithm further comprises a feedback function that adjusts what sensor data is captured based on detected combinations of information coincident with a failure mode. In embodiments, the network control circuit implements a network of similarly configured systems using an intercommunication protocol such as multi-hop, mesh, serial, parallel, ring, real-time and hub-and-spoke. In embodiments, the network control circuit self-arranges the system into network communication with similarly configured systems using an intercommunication protocol such as multi-hop, mesh, serial, parallel, ring, real-time and hub-and-spoke. In embodiments, after a configurable time period, the system stores only digests of the information and discards the underlying information.

**[1302]** A system for data collection in an industrial environment having a self-sufficient data acquisition box for capturing and analyzing data in an industrial environment, the system comprising: a data circuit for analyzing a plurality of sensor inputs; a network communication interface; a network control circuit for sending and receiving information related to the sensor inputs to an external system; and a data filter circuit configured to dynamically adjust what portion of the information is sent based on instructions received over the network communication interface.

**[1303]** Wherein the data circuit is configured to analyze data indicative of a fatigue or wear failure mode in a roller bearing assembly selected from the group consisting of rust, micropitting, macropitting, gear teeth breakage, fretting, case-core separation, plastic deformation, scuffing, polishing, adhesion, abrasion, subcase fatigue, erosion, corrosion, electric discharge, cavitation, cracking, scoring, profile pitting, and spalling.

**[1304]** Wherein the data circuit is configured to analyze data indicative of a fatigue or wear failure mode in a gear box selected from the group consisting of micropitting, macropitting, gear tooth wear, tooth breakage, spalling, fretting, case-core separation, plastic deformation, scuffing, polishing, adhesion, abrasion, subcase fatigue, erosion, electric discharge, cavitation, rust, corrosion, and cracking.

**[1305]** Wherein the data circuit is configured to analyze data indicative of a fatigue or wear failure mode in a hydraulic pump selected from the group consisting of fluid aeration, overheating, over-pressurization, lubricating film loss, depressurization, shaft failure, vacuum seal failure, large particle contamination, small particle contamination, rust, corrosion, cavitation, shaft galling, seizure, bushing wear, channel seal loss, and implosion.

**[1306]** Wherein the data circuit is configured to analyze data indicative of a fatigue or wear failure mode in an engine selected from the group consisting of imbalance, gasket failure, camshaft, spring breakage, valve breakage, valve scuffing, valve leakage, clutch slipping, gear interference, belt slipping, belt teeth breakage, belt breakage, gear tooth failure, oil seal failure, aftercooler, intercooler, or radiator failure, rod failure, sensor failure, crankshaft failure, bearing seizure, overload at low RPM, cranking, full stop, high RPM, overspeed, piston disintegration, shock overload, torque overload, surface fatigue, critical speed failure, weld failure, and material failures including micropitting, macropitting, gear teeth breakage, fretting, case-core separation,

plastic deformation, scuffing, polishing, adhesion, abrasion, subcase fatigue, rust, erosion, corrosion, electric discharge, cavitation, cracking, scoring, profile pitting, spalling.

**[1307]** Wherein the data circuit is configured to analyze data indicative of a fatigue or wear failure mode in a vehicle chassis, body or frame selected from the group consisting of imbalance, gasket failure, spring breakage, lubricant seal failure, sensor failure, bearing seizure, shock overload, surface fatigue, weld failure, spring failure, strut failure, control arm failure, kingpin failure, tie-rod & end failure, pinion bearing failure, pinion gear failure, and material failures including micropitting, macropitting, fretting, rust, erosion, corrosion, electric discharge, cavitation, cracking, scoring, profile pitting, spalling.

**[1308]** Wherein the data circuit is configured to analyze data indicative of a fatigue or wear failure mode in a powertrain, propeller shaft, drive shaft, final drive, or wheel end, selected from the group consisting of imbalance, gasket failure, camshaft failure, gear box failure, spring breakage, valve breakage, valve scuffing, belt teeth breakage, belt breakage, gear tooth failure, oil seal failure, rod failure, sensor failure, crankshaft failure, bearing seizure, overload at low RPM, cranking, full stop, high RPM, overspeed, piston disintegration, shock overload, torque overload, surface fatigue, critical speed failure, yoke damage, weld failure, u-joint failure, CV joint failure, differential failure, axle shaft failure, spring failure, strut failure, control arm failure, kingpin failure, tie-rod & end failure, pinion bearing failure, ring gear failure, pinion gear failure, spider gear failure, wheel bearing failure, and material failures including micropitting, macropitting, gear teeth breakage, fretting, case-core separation, plastic deformation, scuffing, polishing, adhesion, abrasion, subcase fatigue, rust, erosion, corrosion, electric discharge, cavitation, cracking, scoring, profile pitting, and spalling.

**[1309]** Wherein the sensor inputs are selected from the group consisting of roller bearing sensor, deformation sensor, camera, ultraviolet sensor, infrared sensor, audio sensor, vibration sensor, viscosity sensor, chemical sensor, contaminant sensor, particulate sensor, weight sensor, rotation sensor, temperature sensor, position sensor, ultrasonic sensor, solid chemical sensor, pH sensor, fluid chemical sensor, lubricant sensor, radiation sensor, x-ray radiograph, gamma-ray radiograph, scanning tunneling microscope, photon tunneling microscope, scanning probe microscope, laser displacement meter, magnetic particle inspector, ultraviolet particle detector, load sensor, static load sensor, axial load sensor, accelerometer, speed sensor, rotational sensor, moisture, humidity, ammeter, voltmeter, flux meter, and electric field detector, gear box sensor, gear wear sensor, "tooth decay" sensor, rotation sensors, transmission input sensor, transmission output sensor, manifold airflow sensor (determines engine load and thus affects gearbox), engine load sensors, throttle position sensor, coolant temperature sensor, speed sensor, brake sensor, fluid temperature sensor, tool load sensor, bearing sensor, standstill counter, hydraulic pump sensor, oxygen sensors, gas sensors, oil sensors, chemical analysis, pressure detector, vacuum detector, densitometer, torque sensor, engine sensor, exhaust sensors, exhaust gas sensor, crankshaft position sensor, camshaft position sensor, capacitive pressure sensor, piezo-resistive sensor, wireless sensor, wireless pressure sensor, chemical sensors, oxygen sensor, fuel sensor, gyro sensor, mechanical position sensors, accelerometer, mems sensors, digital sensors, mass air flow sensor, manifold absolute pressure sensor, throttle control sensor, injector sensor, NOx sensor, variable valve timing sensor, tank pressure sensor, fuel level sensor, fuel flow sensor, fluid flow sensor, damper sensor, torque sensor, particulate sensor, air flow meter, air temperature sensor, coolant temperature sensor, in-cylinder pressure sensor, engine speed sensor, knock sensor, drive shaft sensor, angular sensor, transverse vibration sensor, torsional vibration sensor, critical speed vibration sensor, powertrain sensor, engine sensors: power sensor, oil pressure, oil temperature, oil viscosity, oil flow sensor, load sensor (structural analysis), vibration sensor, frequency sensor, audio sensor, transfer case sensor, differential sensor, tire pressure gauge, tire damage gauge, tire vibration sensor, hub and rim integrity sensors, air leak sensors, fluid leak sensors, and lubricant leak sensors.

**[1310]** Wherein the sensor inputs additionally comprise microphones or vibration sensors configured to detect vibrational or audio-frequency conditions in movable or rotational components selected from the list consisting of whirring, howling, growling, whining, rumbling, clunking, rattling, wheel hopping, chattering.

**[1311]** Wherein the data circuit is configured to analyze data indicative of a fatigue or wear failure mode in a production line gear box selected from the group consisting of micropitting, macropitting, gear tooth wear, tooth breakage, spalling, fretting, case-core separation, plastic deformation, scuffing, polishing, adhesion, abrasion, subcase fatigue, erosion, electric discharge, cavitation, corrosion, and cracking.

**[1312]** Wherein the data circuit is configured to analyze data indicative of a fatigue or wear failure mode in a production line vibrator selected from the group consisting of moisture penetration, contamination, micropitting, macropitting, gear tooth wear, tooth breakage, spalling, fretting, case-core separation, plastic deformation, scuffing, polishing, adhesion, abrasion, subcase fatigue, rust, erosion, electric discharge, cavitation, corrosion, and cracking.

**[1313]** Wherein the analyzing further comprises detecting anomalies in the received data.

**[1314]** Wherein the data filter circuit executes stored procedures to create digests of the information.

**[1315]** Wherein the system discards the data underlying the digests of the information after a user-configurable time period.

**[1316]** Wherein the analyzing further comprises determining what data to store, determining what data to transmit, determining what data to summarize, determining what data to discard, or determining the accuracy of the received data.

**[1317]** Wherein the system is configured to communicate with a plurality of other similarly configured systems and store the information when the amount of storage used by the system exceeds a threshold.

**[1318]** Wherein the system is configured to execute the instructions received via the network communication interface using a virtual machine.

**[1319]** Wherein the system further comprises a digitally signed code execution environment to decrypt and run the instructions it receives via the network interface.

**[1320]** Wherein the system further comprises multiple distinct cryptographically protected memory segments.

**[1321]** Wherein the at least one of the memory segments is made available for public interaction with the stored data via a public key-private key management system.

**[1322]** Wherein the system further comprises a conditioning circuit for converting signals to a form suitable for input to an analog-to-digital converter.

**[1323]** A system for data collection in an industrial environment having a self-sufficient data acquisition box for capturing and analyzing data in an industrial process, the system comprising:

a data circuit for analyzing a plurality of sensor inputs;

a network control circuit for sending and receiving information related to the sensor inputs to an external system; a storage device;

where the data circuit continuously monitors sensor inputs and stores them in an embedded data cube; and

where the data acquisition box dynamically determines what information to send based on statistical analysis of historical data.

**[1324]** Wherein the system further comprises a plurality of network communication interfaces.

**[1325]** Wherein the network control circuit bridges another similarly configured system from one network to another using the plurality of network communication interfaces.

**[1326]** Wherein the analyzing further comprises detecting anomalies in the information.

**[1327]** Wherein the data circuit executes stored procedures to create digests of the information.

**[1328]** Wherein the data circuit supplies digest data to one client and non-digest data to another client simultaneously.

**[1329]** Wherein the data circuit stores digests of historical anomalies and discards at least a portion of the information.

**[1330]** Wherein the data circuit provides client query access to the embedded data cube in real time.

**[1331]** Wherein the data circuit supports client requests in the form of a SQL query.

**[1332]** Wherein the data circuit supports client requests in the form of a OLAP query.

**[1333]** Wherein the system further comprises a conditioning circuit for converting signals to a form suitable for input to an analog-to-digital converter.

**[1334]** A system for data collection in an industrial environment having a self-sufficient data acquisition box for capturing and analyzing data in an industrial process, the system comprising:

a data circuit for analyzing a plurality of sensor inputs;

a network control circuit for sending and receiving information related to the sensor inputs to an external system;

wherein the system is configured to provide sensor data to a plurality of other similarly configured systems; and

wherein the system dynamically reconfigures where it sends data and the and the quantity it sends based on the availability of the other similarly configured systems.

**[1335]** Wherein the system further comprises a plurality of network communication interfaces.

**[1336]** Wherein the network control circuit bridges another similarly configured system from one network to another using the plurality of network communication interfaces.

**[1337]** Wherein the dynamic reconfiguration is based on requests received over the one or more network communication interfaces.

**[1338]** Wherein the dynamic reconfiguration is based on requests made by a remote user.

**[1339]** Wherein the dynamic reconfiguration is based on an analysis of the type of data acquired by the data acquisition box.

**[1340]** Wherein the dynamic reconfiguration is based on an operating parameter of at least one of the system and one of the similarly configured systems.

**[1341]** Wherein the network control circuit sends sensor data in packets designed to be stored and forwarded by the other similarly configured systems.

**[1342]** Wherein, when a fault is detected in the system, the network control circuit forwards a at least a portion of its stored information for to another similarly configured system.

**[1343]** Wherein the network control circuit determines how to route information through a network of similarly configured systems connected, based on the source of the information request.

**[1344]** Wherein the network control circuit decides how to route data in a network of similarly configured systems, based on how frequently information is being requested.

**[1345]** Wherein the decides how to route data in a network of similarly configured systems, based how much data is being requested over a given period.

**[1346]** Wherein the network control circuit implements a network of similarly configured systems using an intercommunication protocol selected from the list consisting of multi-hop, mesh, serial, parallel, ring, real-time and hub-and-spoke.

**[1347]** Wherein, after a configurable time period, the system stores only digests of the information and discards the underlying information.

**[1348]** Wherein the system further comprises a conditioning circuit for converting signals to a form suitable for input to an analog-to-digital converter.

**[1349]** A system for data collection in an industrial environment having a self-sufficient data acquisition box for capturing and analyzing data in an industrial process, the system comprising:

a data circuit for analyzing a plurality of sensor inputs;

a network control circuit for sending and receiving information related to the sensor inputs to an external system;

wherein the system provides sensor data to one or more similarly configured systems;

wherein the data circuit dynamically reconfigures the route by which it sends data based on how many other devices are requesting the information.

**[1350]** Wherein the system further comprises a plurality of network communication interfaces.

**[1351]** Wherein the network control circuit bridges another similarly configured system from one network to another using the plurality of network communication interfaces.

**[1352]** Where the network control circuit implements a network of similarly configured systems using an intercommunication protocol selected from the list consisting of multi-hop, mesh, serial, parallel, ring, real-time and hub-and-spoke.

**[1353]** Wherein the system continuously provides a single copy of its information to another similarly configured system and directs requesters of its information to the another similarly configured system.

**[1354]** Wherein the another similarly configured system has different operational characteristics than the system.

[1355] Wherein different operational characteristics are selected from the list consisting of power, storage, network connectivity, proximity, reliability, duty cycle.

[1356] Wherein, after a configurable time period, the system stores only digests of the information and discards the underlying information.

[1357] A system for data collection in an industrial environment having a self-sufficient data acquisition box for capturing and analyzing data in an industrial process, the system comprising:

a data circuit for analyzing a plurality of sensor inputs;

a network control circuit for sending and receiving information related to the sensor inputs to an external system;

wherein the system provides sensor data to one or more similarly configured systems; and

wherein the data circuit dynamically nominates a similarly configured system capable of providing sensor data to replace the system.

[1358] Wherein the nomination is triggered by the detection of a system failure mode.

[1359] Wherein, when the system is unable to supply a requested signal it nominates another similarly configured system to supply similar but not identical information to a requestor.

[1360] Wherein the system indicates to the requestor that the new signal is different than the original.

[1361] Where the network control circuit implements a network of similarly configured systems using an intercommunication protocol selected from the list consisting of multi-hop, mesh, serial, parallel, ring, real-time and hub-and-spoke.

[1362] Wherein, after a configurable time period, the system stores only digests of the information and discards the underlying information.

[1363] Wherein the network control circuit self-arranges the system into a redundant storage network with one or more similarly configured systems.

[1364] Wherein the network control circuit self-arranges the system into a fault-tolerant storage network with one or more similarly configured systems.

[1365] Wherein the network control circuit self-arranges the system into a hierarchical storage network with one or more similarly configured systems.

[1366] Wherein the network control circuit self-arranges the system into a hierarchical data transmission configuration in order to reduce upstream traffic.

[1367] Wherein the network control circuit self-arranges the system into a matrixed network configuration with multiple redundant data paths in order to increase reliability of information transmission.

[1368] Wherein the network control circuit self-arranges the system into a matrixed network configuration with multiple redundant data paths in order to increase reliability of information transmission.

[1369] Wherein the system accumulates data received from other similarly configured systems while an upstream network connection is unavailable, and then sends all accumulated data once the upstream network connection is restored.

[1370] Wherein the accumulated data is committed to a remote database.

[1371] Wherein the system rearranges its position in a mesh network topology with other similarly configured systems in order to minimize the amount of data it must relay from the other systems.

[1372] Wherein the system rearranges its position in a mesh network topology with other similarly configured systems in order to minimize the amount of data it must send through other the other systems.

[1373] A system for data collection in an industrial environment having a self-sufficient data acquisition box for capturing and analyzing data in an industrial process, the system comprising:

a data circuit for analyzing a plurality of sensor inputs;

a network control circuit for sending and receiving information related to the sensor inputs to an external system;

wherein the system provides sensor data to one or more similarly configured systems; and

wherein the system and the one or more similarly configured systems are arranged as a consolidated virtual information provider.

[1374] Wherein the system and each of the similarly configured systems multiplex their information.

[1375] Wherein the system and each of the similarly configured systems provide a single unified information source to a requestor.

[1376] Wherein the system and each of the similarly configured systems further comprise an intelligent agent circuit that combines the data between systems.

[1377] Wherein the system and each of the similarly configured systems further comprise an intelligent agent circuit that chooses what data to collect or store based on a machine learning algorithm.

[1378] Wherein the machine learning algorithm further comprises a feedback function that takes as input what data is used by an external system.

[1379] Wherein the machine learning algorithm further comprises a control function that adjusts the degree of precision, frequency of capture, or information stored based on an analysis of requests for data over time.

[1380] Wherein the machine learning algorithm further comprises a feedback function that adjusts what sensor data is captured based on an analysis of requests for information over time.

[1381] Wherein the machine learning algorithm further comprises a feedback function that adjusts what sensor data is captured based on historical use of information.

[1382] Wherein the machine learning algorithm further comprises a feedback function that adjusts what sensor data is captured based on what information was most indicative of a failure mode.

[1383] Wherein the machine learning algorithm further comprises a feedback function that adjusts what sensor data is captured based on detected combinations of information coincident with a failure mode.

[1384] Wherein the network control circuit implements a network of similarly configured systems using an intercommunication protocol selected from the list consisting of multi-hop, mesh, serial, parallel, ring, real-time and hub-and-spoke.

[1385] Wherein the network control circuit self-arranges the system into network communication with similarly configured systems using an intercommunication protocol selected from the list consisting of multi-hop, mesh, serial, parallel, ring, real-time and hub-and-spoke.

**[1386]** Wherein, after a configurable time period, the system stores only digests of the information and discards the underlying information.

**[1387]** Disclosed herein are methods and systems for data collection in an industrial environment featuring self-organization functionality. Such data collection systems and methods may facilitate intelligent, situational, context-aware collection, summarization, storage, processing, transmitting, and/or organization of data, such as by one or more data collectors (such as any of the wide range of data collector embodiments described throughout this disclosure), a central headquarters or computing system, and the like. The described self-organization functionality of data collection in an industrial environment may improve various parameters of such data collection, as well as parameters of the processes, applications, and products that depend on data collection, such as data quality parameters, consistency parameters, efficiency parameters, comprehensiveness parameters, reliability parameters, effectiveness parameters, storage utilization parameters, yield parameters (including financial yield, output yield, and reduction of adverse events), energy consumption parameters, bandwidth utilization parameters, input/output speed parameters, redundancy parameters, security parameters, safety parameters, interference parameters, signal-to-noise parameters, statistical relevancy parameters, and others. The self-organization functionality may optimize across one or more such parameters, such as based on a weighting of the value of the parameters; for example, a swarm of data collectors may be managed (or manage itself) to provide a given level of redundancy for critical data, while not exceeding a specified level of energy usage, e.g., per data collector or a group of data collectors or the entire swarm of data collectors. This may include using a variety of optimization techniques described throughout this disclosure and the documents incorporated herein by reference.

**[1388]** In embodiments, such methods and systems for data collection in an industrial environment can include one or more data collectors, e.g., arranged in a cooperative group or "swarm" of data collectors, that collect and organize data in conjunction with a data pool in communication with a computing system, as well as supporting technology components, services, processes, modules, applications and interfaces, for managing the data collection (collectively referred to in some cases as a data collection system **12004**). Examples of such components include, but are not limited to, a model-based expert system, a rule-based expert system, an expert system using artificial intelligence (such as a machine learning system, which may include a neural net expert system, a self-organizing map system, a human-supervised machine learning system, a state determination system, a classification system, or other artificial intelligence system), or various hybrids or combinations of any of the above. References to a self-organizing method or system should be understood to encompass utilization of any one of the foregoing or suitable combinations, except where context indicates otherwise.

**[1389]** The data collection systems and methods of the present disclosure can be utilized with various types of data, including but not limited to vibration data, noise data and other sensor data of the types described throughout this disclosure. Such data collection can be utilized for event detection, state detection, and the like, and such event detection, state detection, and the like can be utilized to self-organize the data collection systems and methods, as further discussed herein. The self-organization functionality may include managing data collector(s), both individually or in groups, where such functionality is directed at supporting an identified application, process, or workflow, such as confirming progress toward or/alignment with one or more objectives, goals, rules, policies, or guidelines. The self-organization functionality may also involve managing a different goal/guideline, or directing data collectors targeted to determining an unknown variable based on collection of other data (such as based on a model of the behavior of a system that involves the variable), selecting preferred sensor inputs among available inputs (including specifying combinations, fusions, or multiplexing of inputs), and/or specifying a specific data collector among available data collectors.

**[1390]** A data collector may include any number of items, such as sensors, input channels, data locations, data streams, data protocols, data extraction techniques, data transformation techniques, data loading techniques, data types, frequency of sampling, placement of sensors, static data points, metadata, fusion of data, multiplexing of data, self-organizing techniques, and the like as described herein. Data collector settings may describe the configuration and makeup of the data collector, such as by specifying the parameters that define the data collector. For example, data collector settings may include one or more frequencies to measure. Frequency data may further include at least one of a group of spectral peaks, a true-peak level, a crest factor derived from a time waveform, and an overall waveform derived from a vibration envelope, as well as other signal characteristics described throughout this disclosure. Data collectors may include sensors measuring or data regarding one or more wavelengths, one or more spectra, and/or one or more types of data from various sensors and metadata. Data collectors may include one or more sensors or types of sensors of a wide range of types, such as described throughout this disclosure and the documents incorporated by reference herein. Indeed, the sensors described herein may be used in any of the methods or systems described throughout this disclosure. For example, one sensor may be an accelerometer, such as one that measures voltage per G of acceleration (e.g., 100 mV/G, 500 mV/G, 1 V/G, 5 V/G, 10 V/G). In embodiments, a data collector may alter the makeup of the subset of the plurality of sensors used in a data collector based on optimizing the responsiveness of the sensor, such as for example choosing an accelerometer better suited for measuring acceleration of a lower speed gear system or drill/boring device versus one better suited for measuring acceleration of a higher speed turbine in a power generation environment. Choosing may be done intelligently, such as for example with a proximity probe and multiple accelerometers disposed on a specific target (e.g., a gear system, drill, or turbine) where while at low speed one accelerometer is used for measuring in the data collector and another is used at high speeds. Accelerometers come in various types, such as piezo-electric crystal, low frequency (e.g., 10 V/G), high speed compressors (10 MV/G), MEMS, and the like. In another example, one sensor may be a proximity probe which can be used for sleeve or tilt-pad bearings (e.g., oil bath), or a velocity probe. In yet another example, one sensor may be a solid state relay (SSR) that is structured to automatically interface with another routed data collector (such as a mobile or portable data collector) to obtain or deliver data. In another example, a data collector

may be routed to alter the makeup of the plurality of available sensors, such as by bringing an appropriate accelerometer to a point of sensing, such as on or near a component of a machine. In still another example, one sensor may be a triax probe (e.g., a 100 MV/G triax probe), that in embodiments is used for portable data collection. In some embodiments, of a triax probe, a vertical element on one axis of the probe may have a high frequency response while the ones mounted horizontally may influence limit the frequency response of the whole triax. In another example, one sensor may be a temperature sensor and may include a probe with a temperature sensor built inside, such as to obtain a bearing temperature. In still additional examples, sensors may be ultrasonic, microphone, touch, capacitive, vibration, acoustic, pressure, strain gauges, thermographic (e.g., camera), imaging (e.g., camera, laser, IR, structured light), afield detector, an EMI' meter to measure an AC electromagnetic field, a gaussmeter, a motion detector, a chemical detector, a gas detector, a CBRNE detector, a vibration transducer, a magnetometer, positional, location-based, a velocity sensor, a displacement sensor, a tachometer, a flow sensor, a level sensor, a proximity sensor, a pH sensor, a hygrometer/moisture sensor, a densitometric sensor, an anemometer, a viscometer, or any analog industrial sensor and/or digital industrial sensor. In a further example, sensors may be directed at detecting or measuring ambient noise, such as a sound sensor or microphone, an ultrasound sensor, an acoustic wave sensor, and an optical vibration sensor (e.g., using a camera to see oscillations that produce noise). In still another example, one sensor may be a motion detector.

**[1391]** Data collectors may be of or may be configured to encompass one or more frequencies, wavelengths or spectra for particular sensors, for particular groups of sensors, or for combined signals from multiple sensors (such as involving multiplexing or sensor fusion). Data collectors may be of or may be configured to encompass one or more sensors or sensor data (including groups of sensors and combined signals) from one or more pieces of equipment/components, areas of an installation, disparate but interconnected areas of an installation (e.g., a machine assembly line and a boiler room used to power the line), or locations (e.g., a building in one geographic location and a building in a separate, different geographic location). Data collector settings, configurations, instructions, or specifications (collectively referred to herein using any one of those terms) may include where to place a sensor, how frequently to sample a data point or points, the granularity at which a sample is taken (e.g., a number of sampling points per fraction of a second), which sensor of a set of redundant sensors to sample, an average sampling protocol for redundant sensors, and any other aspect that would affect data acquisition.

**[1392]** Within the data collection system **12004**, the self-organization functionality can be implemented by a neural net, a model-based system, a rule-based system, a machine learning system, and/or a hybrid of any of those systems. Further, the self-organizing functionality may be performed in whole or in part by individual data collectors, a collection or group of data collectors, a network-based computing system, a local computing system comprising one or more computing devices, a remote computing system comprising one or more computing devices, and a combination of one or more of these components. The self-organization functionality may be optimized for a particular goal or outcome, such as predicting and managing performance, health, or other characteristics of a piece of equipment, a component, or a system of equipment or components. Based on continuous or periodic analysis of sensor data, as patterns/trends are identified, or outliers appear, or a group of sensor readings begin to change, etc., the self-organization functionality may modify the collection of data intelligently, as described herein. This may occur by triggering a rule that reflects a model or understanding of system behavior (e.g., recognizing a shift in operating mode that calls for different sensors as velocity of a shaft increases) or it may occur under control of a neural net (either in combination with a rule-based approach or on its own), where inputs are provided such that the neural net over time learns to select appropriate collection modes based on feedback as to successful outcomes (e.g., successful classification of the state of a system, successful prediction, successful operation relative to a metric). For example only, when an assembly line is reconfigured for a new product or a new assembly line is installed in a manufacturing facility, data from the current data collector(s) may not accurately predict the state or metric of operation of the system, thus, the self-organization functionality may begin to iterate to determine if a new data collector, type of sensed data, format of sensed data, etc. is better at predicting a state or metric. Based on offset system data, such as from a library or other data structure, certain sensors, frequency bands or other data collectors may be used in the system initially and data may be collected to assess performance. As the self-organization functionality iterates, other sensors/frequency bands may be accessed to determine their relative weight in identifying performance metrics. Over time, a new frequency band may be identified (or a new collection of sensors, a new set of configurations for sensors, or the like) as a better or more suitable gauge of performance in the system and the self-organization functionality may modify its data collector(s) based on this iteration. For example only, perhaps an older boring tool in an energy extraction environment dampens one or more vibration frequencies while a different frequency is of higher amplitude and present during optimal performance than what was seen in the present system. In this example, the self-organization functionality may alter the data collectors from what was originally proposed, e.g., by the data collection system, to capture the higher amplitude frequency that is present in the current system.

**[1393]** The self-organization functionality, in embodiments involving a neural net or other machine learning system, may be seeded and may iterate, e.g., based on feedback and operation parameters, such as described herein. Certain feedback may include utilization measures, efficiency measures (e.g., power or energy utilization, use of storage, use of bandwidth, use of input/output use of perishable materials, use of fuel, and/or financial efficiency, financial such as reduction of costs), measures of success in prediction or anticipation of states (e.g., avoidance and mitigation of faults), productivity measures (e.g., workflow), yield measures, and profit measures. Certain parameters may include storage parameters (e.g., data storage, fuel storage, storage of inventory), network parameters (e.g., network bandwidth, input/output speeds, network utilization, network cost, network speed, network availability), transmission parameters (e.g., quality of transmission of data, speed of transmission of data, error rates in transmission, cost of transmission), security parameters (e.g., number and/or type

of exposure events, vulnerability to attack, data loss, data breach, access parameters), location and positioning parameters (e.g., location of data collectors, location of workers, location of machines and equipment, location of inventory units, location of parts and materials, location of network access points, location of ingress and egress points, location of landing positions, location of sensor sets, location of network infrastructure, location of power sources), input selection parameters, data combination parameters (e.g., for multiplexing, extraction, transformation, loading), power parameters (e.g., of individual data collectors, groups of data collectors, or all potentially available data collectors), states (e.g., operational modes, availability states, environmental states, fault modes, health states, maintenance modes, anticipated states), events, and equipment specifications. With respect to states, operating modes may include, mobility modes (direction, speed, acceleration, and the like), type of mobility modes (e.g., rolling, flying, sliding, levitation, hovering, floating), performance modes (e.g., gears, rotational speeds, heat levels, assembly line speeds, voltage levels, frequency levels), output modes, fuel conversion modes, resource consumption modes, and financial performance modes (e.g., yield, profitability). Availability states may refer to anticipating conditions that could cause machine to go offline or require backup. Environmental states may refer to ambient temperature, ambient humidity/moisture, ambient pressure, ambient wind/fluid flow, presence of pollution or contaminants, presence of interfering elements (e.g., electrical noise, vibration), power availability, and power quality, among other parameters. Anticipated states may include achieving or not achieving a desired goal, such as a specified/threshold output production rate, a specified/threshold generation rate, an operational efficiency/failure rate, a financial efficiency/profit goal, a power efficiency/resource utilization, an avoidance of a fault condition (e.g., overheating, slow performance, excessive speed, excessive motion, excessive vibration/oscillation, excessive acceleration, expansion/contraction, electrical failure, running out of stored power/fuel, overpressure, excessive radiation/melt down, fire, freezing, failure of fluid flow (e.g., stuck valves, frozen fluids), mechanical failures (e.g., broken component, worn component, faulty coupling, misalignment, asymmetries/deflection, damaged component (e.g., deflection, strain, stress, cracking), imbalances, collisions, jammed elements, and lost or slipping chain or belt), avoidance of a dangerous condition or catastrophic failure, and availability (online status)).

**[1394]** The self-organization functionality may comprise or be seeded with a model that predicts an outcome or state given a set of data, which may comprise inputs from sensors, such as via a data collector, as well as other data, such as from system components, from external systems and from external data sources. For example, the model may be an operating model for an industrial environment, machine, or workflow. In another example, the model may be for anticipating states, for predicting fault, for optimizing maintenance, for optimizing data transport (such as for optimizing network coding, network-condition-sensitive routing), for optimizing data marketplaces, and the like.

**[1395]** The self-organization functionality may result in any number of downstream actions based on analysis of data from the data collector(s). In an embodiment, the self-organization functionality may determine that the system should either keep or modify operational parameters, equipment or a weighting of a neural net model given a desired goal, such as a specified/threshold output production rate, specified/threshold generation rate, an operational efficiency/failure rate, a financial efficiency/profit goal, a power efficiency/resource utilization, an avoidance of a fault condition, an avoidance of a dangerous condition or catastrophic failure, and the like. In embodiments, the adjustments may be based on determining context of an industrial system, such as understanding a type of equipment, its purpose, its typical operating modes, the functional specifications for the equipment, the relationship of the equipment to other features of the environment (including any other systems that provide input to or take input from the equipment), the presence and role of operators (including humans and automated control systems), and ambient or environmental conditions. For example, in order to achieve a profit goal in a distribution environment (e.g., a power distribution environment), a generator or system of generators may need to operate at a certain efficiency level. The self-organization functionality may be seeded with a model for operation of the system of generators in a manner that results in a specified profit goal, such as indicating an on/off state for individual generator(s) in the power generation system based on the time of day, current market sale price for the fuel consumed by the generators, current demand or anticipated future demand, and the like. As it acquires data and iterates, the model predicts whether the profit goal will be achieved given the current data, and determine whether the data or type of data being collected is appropriate, sufficient, etc. for the model. Based on the results of the iteration, a recommendation may be made (or a control instruction may be automatically provided) to gather different/additional data, organize the data differently, direct different data collectors to collect new data, etc. and/or to operate a subset of the generators at a higher output (but less efficient) rate, power on additional generators, maintain a current operational state, or the like. Further, as the system iterates, one or more additional sensors may be sampled in the model to determine if their addition to the self-organization functionality would improve predicting a state or otherwise assisting with the goals of the data collection efforts.

**[1396]** In embodiments, a system for data collection in an industrial environment may include a plurality of input sensors, such as any of those described herein, communicatively coupled to a data collector having one or more processors. The data collection system may include a plurality of individual data collectors structured to operate together to determine at least one subset of the plurality of sensors from which to process output data. The data collection system may also include a machine learning circuit structured to receive output data from the at least one subset of the plurality of sensors and learn received output data patterns indicative of a state. In some embodiments, the data collection system may alter the at least one subset of the plurality of sensors, or an aspect thereof, based on one or more of the learned received output data patterns and the state. In certain embodiments, the machine learning circuit is seeded with a model that enables it to learn data patterns. The model may be a physical model, an operational model, a system model, and the like. In other embodiments, the machine learning circuit is structured for deep learning wherein input data is fed to the circuit with no or minimal seeding and the machine learning data analysis circuit learns

based on output feedback. For example, a metal tooling system in a manufacturing environment may operate to manufacture parts using machine tools such as lathes, milling machines, grinding machines, boring tools, and the like. Such machines may operate at various speeds and output rates, which may affect the longevity, efficiency, accuracy, etc. of the machine. The data collector may acquire various parameters to evaluate the environment of the machine tools, e.g., speed of operation, heat generation, vibration, and conformity with a part specification. The system can utilize such parameters and iterate towards a prediction of state, output rate, etc. based on such feedback. Further, the system may self-organize such that the data collector(s) collect additional/different data from which such predictions may be made.

**[1397]** There may be a balance of multiple goals/guidelines in the self-organization functionality of data collection system. For example, a repair and maintenance organization (RMO) may have operating parameters designed for maintenance of a machine in a manufacturing facility, while the owner of the facility may have particular operating parameters for the machine that are designed for meeting a production goal. These goals, in this example relating to a maintenance goal or a production output, may be tracked by a different data collectors or sensors. For example, maintenance of a machine may be tracked by sensors including a temperature sensor, a vibration transducer, and a strain gauge while the production goal of a machine may be tracked by sensors including a speed sensor and a power consumption meter. The data collection system may (optionally using a neural net, machine learning system, deep learning system, or the like, which may occur under supervision by one or more supervisors (human or automated) intelligently manage data collectors aligned with different goals and assign weights, parameter modifications, or recommendations based on a factor, such as a bias towards one goal or a compromise to allow better alignment with all goals being tracked, for example. Compromises among the goals delivered to the data collection system may be based on one or more hierarchies or rules relating to the authority, role, criticality, or the like of the applicable goals. In embodiments, compromises among goals may be optimized using machine learning, such as a neural net, deep learning system, or other artificial intelligence system as described throughout this disclosure. For example, in a power plant where a turbine is operating, the data collection system may manage multiple data collectors, such as one directed to detecting the operational status of the turbine, one directed at identifying a probability of hitting a production goal, and one directed at determining if the operation of the turbine is meeting a fuel efficiency goal. Each of these data collectors may be populated with different sensors or data from different sensors (e.g., a vibration transducer to indicate operational status, a flow meter to indicate production goal, and a fuel gauge to indicate a fuel efficiency) whose output data are indicative of an aspect of a particular goal. Where a single sensor or a set of sensors is helpful for more than one goal, overlapping data collectors (having some sensors in common and other sensors not in common) may take input from that sensor or set of sensors, as managed by the data collection system. If there are constraints on data collection (such as due to power limitations, storage limitations, bandwidth limitations, input/output processing capabilities, or the like), a rule may indicate that one goal (e.g., a fuel utilization goal or a pollution reduction goal that is mandated by law or regulation) takes precedence, such that the data collection for the data collectors associated with that goal are maintained as others are paused or shut down. Management of prioritization of goals may be hierarchical or may occur by machine learning. The data collection system may be seeded with models, or may not be seeded at all, in iterating towards a predicted state (e.g., meeting a goal) given the current data it has acquired. In this example, during operation of the turbine the plant owner may decide to bias the system towards fuel efficiency. All of the data collectors may still be monitored, but as the self-organization functionality iterates and predicts that the system will not collect or is not collecting data sufficient to determine whether the system is or is not meeting a particular goal, the data collection system may recommend or implement changes directed at collecting the appropriate data. Further, the plant owner may structure the system with a bias towards a particular goal such that the recommended changes to data collection parameters affecting such goal are made in favor of making other recommended changes.

**[1398]** In embodiments, the data collection system may continue iterating in a deep-learning fashion to arrive at a distribution of data collectors, after being seeded with more than one data collection data type, that optimizes meeting more than one goal. For example, there may be multiple goals tracked for a refining environment, such as refining efficiency and economic efficiency. Refining efficiency for the refining system may be expressed by comparing fuel put into the system, which can be obtained by knowing the amount of and quality of the fuel being used, and the amount of the refined product output from the system, which is calculated using the flow out of the system. Economic efficiency of the refining system may be expressed as the ratio between costs to run the system, including fuel, labor, materials and services, and the refined product output from the system for a period of time. Data used to track refining efficiency may include data from a flow meter, quality data point(s), and a thermometer, and data used to track economic efficiency may be a flow of product output from the system and costs data. These data may be used in the data collection system to predict states; however, the self-organization functionality of the system may iterate towards a data collection strategy that is optimized to predict states related to both thermal and economic efficiency. The new data collection schema may include data used previously in the individual data collectors but may also use new data from different sensors or data sources.

**[1399]** The iteration of the data collection system may be governed by rules, in some embodiments. For example, the data collection system may be structured to collect data for seeding at a pre-determined frequency. The data collection system may be structured to iterate at least a number of times, such as when a new component/equipment/fuel source is added, when a sensor goes off-line, or as standard practice. For example, when a sensor measuring the rotation of a boring tool in an offshore drilling operation goes off-line and the data collection system begins acquiring data from a new sensor or data collector measuring the same data points, the data collection system may be structured to iterate for a number of times before the state is utilized in or allowed to affect any downstream actions. The data collection system may be structured to train off-line or train in situ/online. The data collection system may be structured to include static

and/or manually input data in its data collectors. For example, a data collection system associated with such a boring tool may be structured to iterate towards predicting a distance bored based on a duration of operation, wherein the data collector(s) include data regarding the speed of the boring tools, a distance sensor, a temperature sensor, and the like.

**[1400]** In embodiments, the data collection system may be overruled. In embodiments, the data collection system may revert to prior settings, such as in the event the self-organization functionality fails, such as if the collected data is insufficient or inappropriately collected, if uncertainty is too high in a model-based system, if the system is unable to resolve conflicting rules in rule-based system, or the system cannot converge on a solution in any of the foregoing. For example, sensor data on a power generation system used by the data collection system may indicate a non-operational state (such as a seized turbine), but output sensors and visual inspection, such as by a drone, may indicate normal operation. In this event, the data collection system may revert to an original data collection schema for seeding the self-organization functionality. In another example, one or more point sensors on a refrigeration system may indicate imminent failure in a compressor, but the data collector self-organized to collect data associated towards determining a performance metric did not identify the failure. In this event, the data collector(s) will revert to an original setting or a version of the data collector setting that would have also identified the imminent failure of the compressor.

**[1401]** In embodiments, the data collection system may change data collector settings in the event that a new component is added that makes the system closer to a different system. For example, a vacuum distillation unit is added to an oil and gas refinery to distill naphthalene, but the current data collector settings for the data collection system are derived from a refinery that distills kerosene. In this example, a data structure with data collector settings for various systems may be searched for a system that is more closely matched to the current system. When a new system is identified as more closely matched, such as one that also distill naphthalene, the new data collector settings (which sensors to use, where to direct them, how frequently to sample, what types of data and points are needed, etc. as described herein) are used to seed the data collection system to iterate towards predicting a state for the system. In embodiments, the data collection system may change data collector settings in the event that a new set of data is available from a third party library. For example, a power generation plant may have optimized a specific turbine model to operate in a highly efficient way and deposited the data collector settings in a data structure. The data structure may be continuously scanned for new data collectors that better aid in monitoring power generation and thus, result in optimizing the operation of the turbine.

**[1402]** In embodiments, the data collection system may utilize self-organization functionality to uncover unknown variables. For example, the data collection system may iterate to identify a missing variable to be used for further iterations. For example, an under-utilized tank in a legacy condensate/make-up water system of a power station may have an unknown capacity because it is inaccessible and no documentation exists on the tank. Various aspects of the tank may be measured by a swarm of data collectors to arrive at an estimated volume (e.g., flow into a downstream space, duration of a dye traced solution to work through the system), which can then be fed into the data collection system as a new variable.

**[1403]** In embodiments, the data collection system node may be on a machine, on a data collector (or a group of them), in a network infrastructure (enterprise or other), or in the cloud. In embodiments, there may be distributed neurons across nodes (e.g., machine, data collector, network, cloud).

**[1404]** In an aspect, and as illustrated in FIG. **164**, a data collection system **12004** can be arranged to collect data in an industrial environment **12000**, e.g., from one or more targets **12002**. In the illustrated embodiments, the data collection system **12004** includes a group or "swarm" **12006** of data collectors **12008**, a network **12010**, a computing system **12012**, and a database or data pool **12014**. Each of the data collectors **12008** can include one or more input sensors and be communicatively coupled to any and all of the other components of the data collection system **12004**, as is partially illustrated by the connecting arrows between components.

**[1405]** The targets **12002** can be any form of machinery or component thereof in an industrial environment **12000**. Examples of such industrial environments **12000** include but are not limited to factories, pipelines, construction sites, ocean oil rigs, ships, airplanes or other aircraft, mining environments, drilling environments, refineries, distribution environments, manufacturing environments, energy source extraction environments, offshore exploration sites, underwater exploration sites, assembly lines, warehouses, power generation environments, and hazardous waste environments, each of which may include one or more targets **12002**. Targets **12002** can take any form of item or location at which a sensor can obtain data. Examples of such targets **12002** include but are not limited to machines, pipelines, equipment, installations, tools, vehicles, turbines, speakers, lasers, automatons, computer equipment, industrial equipment, and switches.

**[1406]** The self-organization functionality of the data collection system **12004** can be performed at or by any of the components of the data collection system **12004**. In embodiments, a data collector **12008** or the swarm **12006** of data collectors **12008** can self-organize without assistance from other components and based on, e.g., the data sensed by its associated sensors and other knowledge. In embodiments, the network **12010** can self-organize without assistance from other components and based on, e.g., the data sensed by the data collectors **12008** or other knowledge. Similarly, the computing system **12012** and/or the data pool **12014** without assistance from other components and based on, e.g., the data sensed by the data collectors **12008** or other knowledge. It should be appreciated that any combination or hybrid-type self-organization system can also be implemented.

**[1407]** For example only, the data collection system **12004** can perform or enable various methods or systems for data collection having self-organization functionality in an industrial environment **12000**. These methods and systems can include analyzing a plurality of sensor inputs, e.g., received from or sensed by sensors at the data collector(s) **12008**. The methods and systems can also include sampling the received data and self-organizing at least one of: (i) a storage operation of the data; (ii) a collection operation of sensors that provide the plurality of sensor inputs, and (iii) a selection operation of the plurality of sensor inputs.

**[1408]** In aspects, the storage operation can include storing the data in a local database, e.g., of a data collector **12008**, a computing system **12012**, and/or a data pool **12014**. The data can also be summarized over a given time period to reduce a size of the sensed data. The summarized data can be sent to one or more data acquisition boxes, to one or more data centers, and/or to other components of the system or other, separate systems. Summarizing the data over a given time period to reduce the size of the data, in some aspects, can include determining a speed at which data can be sent via a network (e.g., network **12010**), wherein the size of the summarized data corresponds to the speed at which data can be sent continuously in real time via the network. In such aspects, or others, the summarized data can be continuously sent, e.g., to an external device via the network.

**[1409]** In various implementations, the methods and systems can include committing the summarized data to a local ledger, identifying one or more other accessible signal acquisition instruments on an accessible network, and/or synchronizing the summarized data at the local ledger with at least one of the other accessible signal acquisition instruments (e.g., data collectors **12008**). In embodiments, receiving a remote stream of sensor data from one or more other accessible signal acquisition instruments via a network can be included. An advertisement message to a potential client indicating availability of at least one of the locally stored data, the summarized data, and the remote stream of sensor data can also or alternatively be sent.

**[1410]** The methods and systems can include identifying one or more other accessible signal acquisition instruments (e.g., data collectors **12008**) on an accessible network (e.g., **12010**), nominating at least one of the one or more other accessible signal acquisition instruments as a logical communication hub, and providing the logical communication hub with a list of available data and their associated sources. The list of available data and their associated sources can be provided to the logical communication hub utilizing a hybrid peer-to-peer communications protocol.

**[1411]** In some aspects, the storage operation can include storing the data in a local database and automatically organizing at least one parameter of the data pool utilizing machine learning. The organizing can be based at least in part on receiving information regarding at least one of an accuracy of classification and an accuracy of prediction of an external machine learning system that uses data from the data pool (e.g., data pool **12014**).

**[1412]** The present disclosure describes a method for data collection in an industrial environment having self-organization functionality, the method according to one disclosed non-limiting embodiment of the present disclosure can include analyzing a plurality of sensor inputs, sampling data received from the sensor inputs and self-organizing at least one of: (i) a storage operation of the data; (ii) a collection operation of sensors that provide the plurality of sensor inputs, and (iii) a selection operation of the plurality of sensor inputs.

**[1413]** The present disclosure describes a system for data collection in an industrial environment having self-organization functionality, the system according to one disclosed non-limiting embodiment of the present disclosure can include a data collector for handling a plurality of sensor inputs from sensors in the industrial environment and for generating data associated with the plurality of sensor inputs, and a self-organizing system for self-organizing at least one of (i) a storage operation of the data, (ii) a data collection operation of sensors that provide the plurality of sensor inputs, and (iii) a selection operation of the plurality of sensor inputs.

**[1414]** The present disclosure describes a method for data collection in an industrial environment having self-organization functionality, the method according to one disclosed non-limiting embodiment of the present disclosure can include analyzing a plurality of sensor inputs,

sampling data received from the sensor inputs; and self-organizing at least one of: (i) a storage operation of the data; (ii) a collection operation of sensors that provide the plurality of sensor inputs, and (iii) a selection operation of the plurality of sensor inputs, wherein the storage operation includes storing the data in a local database, and summarizing the data over a given time period to reduce a size of the data.

**[1415]** A further embodiment of any of the foregoing embodiments of the present disclosure may include situations wherein the method further includes sending the summarized data to one or more data acquisition boxes.

**[1416]** A further embodiment of any of the foregoing embodiments of the present disclosure may include situations wherein the method further includes sending the summarized data to one or more data centers.

**[1417]** A further embodiment of any of the foregoing embodiments of the present disclosure may include situations wherein summarizing the data over a given time period to reduce the size of the data includes determining a speed at which data can be sent via a network, wherein the size of the summarized data corresponds to the speed at which data can be sent continuously in real time via the network.

**[1418]** A further embodiment of any of the foregoing embodiments of the present disclosure may include situations wherein the method further includes continuously sending the summarized data to an external device via the network.

**[1419]** The present disclosure describes a method for data collection in an industrial environment having self-organization functionality, the method according to one disclosed non-limiting embodiment of the present disclosure can include analyzing a plurality of sensor inputs, sampling data received from the sensor inputs and self-organizing at least one of: (i) a storage operation of the data; (ii) a collection operation of sensors that provide the plurality of sensor inputs, and (iii) a selection operation of the plurality of sensor inputs, wherein the storage operation includes storing the data in a local database, summarizing the data over a given time period to reduce a size of the data, committing the summarized data to a local ledger, identifying one or more other accessible signal acquisition instruments on an accessible network, and synchronizing the summarized data at the local ledger with at least one of the other accessible signal acquisition instruments. A further embodiment of any of the foregoing embodiments of the present disclosure may include situations wherein the method further includes receiving a remote stream of sensor data from one or more other accessible signal acquisition instruments via a network.

**[1420]** A further embodiment of any of the foregoing embodiments of the present disclosure may include situations wherein the method further includes sending an advertisement message to a potential client indicating availability

of at least one of the locally stored data, the summarized data, and the remote stream of sensor data.

**[1421]** The present disclosure describes a method for data collection in an industrial environment having self-organization functionality, the method according to one disclosed non-limiting embodiment of the present disclosure can include analyzing a plurality of sensor inputs;

sampling data received from the sensor inputs, self-organizing at least one of: (i) a storage operation of the data (ii) a collection operation of sensors that provide the plurality of sensor inputs, and (iii) a selection operation of the plurality of sensor inputs, wherein the storage operation includes storing the data in a local database, and summarizing the data over a given time period to reduce a size of the data, identifying one or more other accessible signal acquisition instruments on an accessible network, nominating at least one of the one or more other accessible signal acquisition instruments as a logical communication hub, and providing the logical communication hub with a list of available data and their associated sources.

**[1422]** A further embodiment of any of the foregoing embodiments of the present disclosure may include situations wherein the list of available data and their associated sources is provided to the logical communication hub utilizing a hybrid peer-to-peer communications protocol.

The present disclosure describes a method for data collection in an industrial environment having self-organization functionality, the method according to one disclosed non-limiting embodiment of the present disclosure can include analyzing a plurality of sensor inputs, sampling data received from the sensor inputs, and self-organizing at least one of (i) a storage operation of the data, (ii) a collection operation of sensors that provide the plurality of sensor inputs, and (iii) a selection operation of the plurality of sensor inputs, wherein the storage operation includes storing the data in a local database, summarizing the data over a given time period to reduce a size of the data, storing the data in a local database, and automatically organizing at least one parameter of the database utilizing machine learning, wherein the organizing is based at least in part on receiving information regarding at least one of an accuracy of classification and an accuracy of prediction of an external machine learning system that uses data from the database.

**[1423]** In aspects, the collection operation of sensors that provide the plurality of sensor inputs can include receiving instructions directing a mobile data collector unit (e.g., data collector **12008**) to operate sensors at a target (e.g., **12002**), wherein at least one of the plurality of sensors is arranged in the mobile data collector unit. A communication can be transmitted to one or more other mobile data collector units (**12008**) regarding the instructions. The swarm **12006** or portion thereof can self-organize a distribution of the mobile data collector unit and the one or more other mobile data collector units (e.g., data collectors **12008**) at the target **12002**.

**[1424]** In aspects, self-organizing the distribution of the mobile data collector units at the target **12002** comprises utilizing a machine learning algorithm to determine a respective target location for each of the mobile data collector units. The machine learning algorithm can utilize one or more of a plurality of features to determine the respective target locations. Examples of the features can include: battery life of the mobile data collector units (data collectors **12008**), a type of the target **12002** being sensed, a type of signal being sensed, a size of the target **12002**, a number of mobile data collector units (data collectors **12008**) needed to cover the target **12002**, a number of data points needed for the target **12002**, a success in prior accomplishment of signal capture, information received from a headquarters or other components from which the instructions are received, and historical information regarding the sensors operated at the target **12002**.

**[1425]** In implementations, self-organizing the distribution of the mobile data collector unit and the one or more other mobile data collector units at the target location can include proposing a target location for the mobile data collector unit(s), transmitting the target location to at least one other mobile data collector units, receiving confirmation that there is no contention for the target location, directing one of the mobile data collector units to the target location, and collecting sensor data at the target location from the directed mobile data collector unit.

**[1426]** Self-organizing the distribution of the mobile data collector unit and the one or more other mobile data collector units at the target location can also include, in certain embodiments, proposing a target location for the mobile data collector unit, transmitting the target location to at least one of the one or more other mobile data collector units, receiving a proposal for a new target location, directing the mobile data collector unit to the new target location, and collecting sensor data at the new target location from the mobile data collector unit.

**[1427]** In additional or alternative aspects, self-organizing the distribution of the mobile data collector unit and the one or more other mobile data collector units at the target location can comprise proposing a target location for the mobile data collector unit, determining that at least one of the one or more other mobile data collector units is at or moving to the target location, determining a new target location based on the at least one of the one or more other mobile data collector units being at or moving to the target location, directing the mobile data collector unit to the new target location, and collecting sensor data at the new target location from the mobile data collector unit.

**[1428]** Self-organizing the distribution of the mobile data collector unit and the one or more other mobile data collector units at the target location can further comprise determining a type of the sensors to operate at the target **12002**, receiving confirmation that there is no contention for the type of sensors, directing the mobile data collector unit to operate the type of sensors at the target **12002**, and collecting sensor data from the type of sensors at the target **12002** from the mobile data collector unit.

**[1429]** In aspects, self-organizing the distribution of the mobile data collector unit and the one or more other mobile data collector units at the target location can include determining a type of the sensors to operate at the target, transmitting the type of the sensors to at least one of the one or more other mobile data collector units, receiving a proposal for a new type of the sensors, directing the mobile data collector unit to operate the new type of sensors at the target, and collecting sensor data from the new type of sensors at the target from the mobile data collector unit.

**[1430]** Self-organizing the distribution of the mobile data collector unit and the one or more other mobile data collector units at the target location can include determining a type of the sensors to operate at the target, determining that at least one of the one or more other mobile data collector

units is operating or can operate the type of the sensors at the target, determining a new type of the sensors based on the at least one of the one or more other mobile data collector units operating or being capable of operating the type of the sensors at the target, directing the mobile data collector unit to operate the new type of sensors at the target, and collecting sensor data from the new type of sensors at the target from the mobile data collector unit.

**[1431]** Self-organizing the distribution of the mobile data collector unit and the one or more other mobile data collector units at the target location, in some implementations, can comprise utilizing a swarm optimization algorithm to allocate areas of sensor responsibility amongst the mobile data collector unit and the one or more other mobile data collector units. Examples of the swarm optimization algorithm include but are not limited to Genetic Algorithms (GA), Ant Colony Optimization (ACO), Particle Swarm Optimization (PSO), Differential Evolution (DE), Artificial Bee Colony (ABC), Glowworm Swarm Optimization (GSO), and Cuckoo Search Algorithm (CSA), Genetic Programming (GP), Evolution Strategy (ES), Evolutionary Programming (EP), Firefly Algorithm (FA), Bat Algorithm (BA) and Grey Wolf Optimizer (GWO), or combinations thereof.

**[1432]** The present disclosure describes a method for data collection in an industrial environment having self-organization functionality, the method according to one disclosed non-limiting embodiment of the present disclosure can include analyzing a plurality of sensor inputs, sampling data received from the sensor inputs, and self-organizing at least one of (i) a storage operation of the data, (ii) a collection operation of sensors that provide the plurality of sensor inputs, and (iii) a selection operation of the plurality of sensor inputs.

**[1433]** The present disclosure describes a system for data collection in an industrial environment having automated self-organization, the system according to one disclosed non-limiting embodiment of the present disclosure can include a data collector for handling a plurality of sensor inputs from sensors in the industrial environment and for generating data associated with the plurality of sensor inputs, and a self-organizing system for self-organizing at least one of (i) a storage operation of the data, (ii) a data collection operation of sensors that provide the plurality of sensor inputs, and (iii) a selection operation of the plurality of sensor inputs.

**[1434]** The present disclosure describes a method for data collection in an industrial environment having self-organization functionality, the method according to one disclosed non-limiting embodiment of the present disclosure can include analyzing a plurality of sensor inputs;

sampling data received from the sensor inputs and self-organizing at least one of (i) a storage operation of the data, (ii) a collection operation of sensors that provide the plurality of sensor inputs, and (iii) a selection operation of the plurality of sensor inputs, wherein the collection operation of sensors that provide the plurality of sensor inputs includes receiving instructions directing a mobile data collector unit to operate sensors at a target, wherein at least one of the plurality of sensors is arranged in the mobile data collector unit, transmitting a communication to one or more other mobile data collector units regarding the instructions, and self-organizing a distribution of the mobile data collector unit and the one or more other mobile data collector units at the target.

**[1435]** A further embodiment of any of the foregoing embodiments of the present disclosure may include situations wherein self-organizing the distribution of the mobile data collector unit and the one or more other mobile data collector units at the target includes utilizing a machine learning algorithm to determine a respective target location for each of the mobile data collector units.

**[1436]** A further embodiment of any of the foregoing embodiments of the present disclosure may include situations wherein the machine learning algorithm utilizes one or more of a plurality of features to determine the respective target locations, the plurality of features including: battery life of the mobile data collector units, a type of the target being sensed, a type of signal being sensed, a size of the target, a number of mobile data collector units needed to cover the target, a number of data points needed for the target, a success in prior accomplishment of signal capture, information received from a headquarters from which the instructions are received, and historical information regarding the sensors operated at the target.

**[1437]** A further embodiment of any of the foregoing embodiments of the present disclosure may include situations wherein self-organizing the distribution of the mobile data collector unit and the one or more other mobile data collector units at the target location includes proposing a target location for the mobile data collector unit, transmitting the target location to at least one of the one or more other mobile data collector units, receiving confirmation that there is no contention for the target location, directing the mobile data collector unit to the target location, and collecting sensor data at the target location from the mobile data collector unit.

**[1438]** A further embodiment of any of the foregoing embodiments of the present disclosure may include situations wherein self-organizing the distribution of the mobile data collector unit and the one or more other mobile data collector units at the target location includes proposing a target location for the mobile data collector unit, transmitting the target location to at least one of the one or more other mobile data collector units, receiving a proposal for a new target location, directing the mobile data collector unit to the new target location and collecting sensor data at the new target location from the mobile data collector unit.

**[1439]** A further embodiment of any of the foregoing embodiments of the present disclosure may include situations wherein self-organizing the distribution of the mobile data collector unit and the one or more other mobile data collector units at the target location includes proposing a target location for the mobile data collector unit, determining that at least one of the one or more other mobile data collector units is at or moving to the target location, determining a new target location based on the at least one of the one or more other mobile data collector units being at or moving to the target location, directing the mobile data collector unit to the new target location and collecting sensor data at the new target location from the mobile data collector unit.

**[1440]** A further embodiment of any of the foregoing embodiments of the present disclosure may include situations wherein self-organizing the distribution of the mobile data collector unit and the one or more other mobile data

collector units at the target location includes determining a type of the sensors to operate at the target, receiving confirmation that there is no contention for the type of sensors, directing the mobile data collector unit to operate the type of sensors at the target, and collecting sensor data from the type of sensors at the target from the mobile data collector unit.

**[1441]** The present disclosure describes a method for data collection in an industrial environment having self-organization functionality, the method according to one disclosed non-limiting embodiment of the present disclosure can include analyzing a plurality of sensor inputs, sampling data received from the sensor inputs, and self-organizing at least one of (i) a storage operation of the data (ii) a collection operation of sensors that provide the plurality of sensor inputs, and (iii) a selection operation of the plurality of sensor inputs, wherein the collection operation of sensors that provide the plurality of sensor inputs includes receiving instructions directing a mobile data collector unit to operate sensors at a target, wherein at least one of the plurality of sensors is arranged in the mobile data collector unit, transmitting a communication to one or more other mobile data collector units regarding the instructions, self-organizing a distribution of the mobile data collector unit and the one or more other mobile data collector units at the target, wherein self-organizing the distribution of the mobile data collector unit and the one or more other mobile data collector units at the target location includes determining a type of the sensors to operate at the target, transmitting the type of the sensors to at least one of the one or more other mobile data collector units, receiving a proposal for a new type of the sensors, directing the mobile data collector unit to operate the new type of sensors at the target and collecting sensor data from the new type of sensors at the target from the mobile data collector unit.

**[1442]** A further embodiment of any of the foregoing embodiments of the present disclosure may include situations wherein self-organizing the distribution of the mobile data collector unit and the one or more other mobile data collector units at the target location includes determining a type of the sensors to operate at the target, determining that at least one of the one or more other mobile data collector units is operating or can operate the type of the sensors at the target, determining a new type of the sensors based on the at least one of the one or more other mobile data collector units operating or being capable of operating the type of the sensors at the target, directing the mobile data collector unit to operate the new type of sensors at the target, and collecting sensor data from the new type of sensors at the target from the mobile data collector unit.

**[1443]** A further embodiment of any of the foregoing embodiments of the present disclosure may include situations wherein self-organizing the distribution of the mobile data collector unit and the one or more other mobile data collector units at the target location includes utilizing a swarm optimization algorithm to allocate areas of sensor responsibility amongst the mobile data collector unit and the one or more other mobile data collector units.

**[1444]** A further embodiment of any of the foregoing embodiments of the present disclosure may include situations wherein the swarm optimization algorithm is one or more types of Genetic Algorithms (GA), Ant Colony Optimization (ACO), Particle Swarm Optimization (PSO), Differential Evolution (DE), Artificial Bee Colony (ABC), Glowworm Swarm Optimization (GSO), and Cuckoo Search Algorithm (CSA), Genetic Programming (GP), Evolution Strategy (ES), Evolutionary Programming (EP), Firefly Algorithm (FA), Bat Algorithm (BA) and Grey Wolf Optimizer (GWO).

**[1445]** In aspects, the selection operation can comprise receiving a signal relating to at least one condition of the industrial environment **12000** and, based on the signal, changing at least one of the sensor inputs analyzed and a frequency of the sampling. The at least one condition of the industrial environment can be a signal-to-noise ratio of the sampled data. The selection operation can include identifying a target signal to be sensed. Additionally, the selection operation further can include identifying one or more non-target signals in a same frequency band as the target signal to be sensed and, based on the identified one or more non-target signals, changing at least one of the sensor inputs analyzed and a frequency of the sampling.

**[1446]** The selection operation can comprise identifying other data collectors sensing in a same signal band as the target signal to be sensed, and, based on the identified other data collectors, changing at least one of the sensor inputs analyzed and a frequency of the sampling. In implementations, the selection operation can further comprise identifying a level of activity of a target associated with the target signal to be sensed and, based on the identified level of activity, changing at least one of the sensor inputs analyzed and a frequency of the sampling.

**[1447]** The selection operation can further comprise receiving data indicative of environmental conditions near a target associated with the target signal, comparing the received environmental conditions of the target with past environmental conditions near the target or another target similar to the target, and, based on the comparison, changing at least one of the sensor inputs analyzed and a frequency of the sampling. At least a portion of the received sampling data can be transmitted to another data collector according to a predetermined hierarchy of data collection.

**[1448]** The selection operation further comprises, in some aspects, receiving data indicative of environmental conditions near a target associated with the target signal, transmitting at least a portion of the received sampling data to another data collector according to a predetermined hierarchy of data collection, receiving feedback via a network connection relating to a quality or sufficiency of the transmitted data, analyzing the received feedback, and, based on the analysis of the received feedback, changing at least one of the sensor inputs analyzed, the frequency of sampling, the data stored, and the data transmitted.

**[1449]** Additionally, or alternatively, the selection operation can comprise receiving data indicative of environmental conditions near a target associated with the target signal, transmitting at least a portion of the received sampling data to another data collector according to a predetermined hierarchy of data collection, receiving feedback via a network connection relating to one or more yield metrics of the transmitted data, analyzing the received feedback, and, based on the analysis of the received feedback, changing at least one of the sensor inputs analyzed, the frequency of sampling, the data stored, and the data transmitted.

**[1450]** In implementations, the selection operation can include receiving data indicative of environmental conditions near a target associated with the target signal, transmitting at least a portion of the received sampling data to another data collector according to a predetermined hierar-

chy of data collection, receiving feedback via a network connection relating to power utilization, analyzing the received feedback, and based on the analysis of the received feedback, changing at least one of the sensor inputs analyzed, the frequency of sampling, the data stored, and the data transmitted.

**[1451]** The selection operation can also or alternatively comprise receiving data indicative of environmental conditions near a target associated with the target signal, transmitting at least a portion of the received sampling data to another data collector according to a predetermined hierarchy of data collection, receiving feedback via a network connection relating to a quality or sufficiency of the transmitted data, analyzing the received feedback, and, based on the analysis of the received feedback, executing a dimensionality reduction algorithm on the sensed data. The dimensionality reduction algorithm can be one or more of a Decision Tree, Random Forest, Principal Component Analysis, Factor Analysis, Linear Discriminant Analysis, Identification based on correlation matrix, Missing Values Ratio, Low Variance Filter, Random Projections, Nonnegative Matrix Factorization, Stacked Auto-encoders, Chi-square or Information Gain, Multidimensional Scaling, Correspondence Analysis, Factor Analysis, Clustering, and Bayesian Models. The dimensionality reduction algorithm can be performed at a data collector **12008**, a swarm **12006** of data collectors **12008**, a network **12010**, a computing system **12012**, a data pool **12014**, or combination thereof. In aspects, executing the dimensionality reduction algorithm can comprise sending the sensed data to a remote computing device.

**[1452]** In aspects, a system for self-organizing collection and storage of data collection in a power generation environment can include a data collector for handling a plurality of sensor inputs from various sensors. Such sensors can be a component of the data collector, external to the data collector (e.g., external sensors or components of different data collector(s)), or a combination thereof. The plurality of sensor inputs can be configured to sense at least one of an operational mode, a fault mode, and a health status of at least one target system. Examples of such target systems include but are not limited to a fuel handling system, a power source, a turbine, a generator, a gear system, an electrical transmission system, a transformer, a fuel cell, and an energy storage device/system. The system can also include a self-organizing system that can be configured for self-organizing at least one of: (i) a storage operation of the data; (ii) a data collection operation of the sensors that provide the plurality of sensor inputs, and (iii) a selection operation of the plurality of sensor input, as is described herein.

**[1453]** In aspects, the system can include a swarm **12006** of mobile data collectors (e.g., data collectors **12008**). Further, in additional or alternative aspects, the self-organizing system can generate, iterate, optimize, etc. a storage specification for organizing storage of the data. The storage specification, e.g., can specify which data will be stored for local storage in the power generation environment, and which data will be output for streaming via a network connection (e.g., network **12010**) from the power generation environment. Other data collection, generation, and/or storage operations can be performed or enabled by the system, as is described herein.

**[1454]** In a non-limiting example, the system can include a plurality of sensors configured to sense various parameters in the environment of a turbine as a target system. Vibration sensors, temperature sensors, acoustic sensors, strain gauges, and accelerometers, and the like may be utilized by the system to generate data regarding the operation of the turbine. As mentioned herein, any and all of the storage operation, the data collection operation, and the selection operation of the plurality of sensor inputs may be adapted, optimized, learned, or otherwise self-organized by the system.

**[1455]** In aspects, a system for self-organizing collection and storage of data collection in energy source extraction environment can include a data collector for handling a plurality of sensor inputs from various sensors. Examples of such energy source extraction environments include a coal mining environment, a metal mining environment, a mineral mining environment, and an oil drilling environment, although other extraction environments are contemplated by the present disclosure. The sensors utilized can be a component of the data collector, external to the data collector (e.g., external sensors or components of different data collector(s)), or a combination thereof. The plurality of sensor inputs can be configured to sense at least one of an operational mode, a fault mode, and a health status of at least one target system. Examples of such target systems include but are not limited to a hauling system, a lifting system, a drilling system, a mining system, a digging system, a boring system, a material handling system, a conveyor system, a pipeline system, a wastewater treatment system, and a fluid pumping system.

**[1456]** The system can also include a self-organizing system that can be configured for self-organizing at least one of: (i) a storage operation of the data; (ii) a data collection operation of the sensors that provide the plurality of sensor inputs, and (iii) a selection operation of the plurality of sensor input, as is described herein. In aspects, the system can include a swarm **12006** of mobile data collectors (e.g., data collectors **12008**). Further, in additional or alternative aspects, the self-organizing system can generate, iterate, optimize, etc. a storage specification for organizing storage of the data. The storage specification, e.g., can specify which data will be stored for local storage in the power generation environment, and which data will be output for streaming via a network connection (e.g., network **12010**) from the power generation environment. Other data collection, generation, and/or storage operations can be performed or enabled by the system, as is described herein.

**[1457]** In a non-limiting example, the system can include a plurality of sensors configured to sense various parameters in the environment of a fluid pumping system as a target system. Vibration sensors, flow sensors, pressure sensors, temperature sensors, acoustic sensors, and the like may be utilized by the system to generate data regarding the operation of the fluid pumping system. As mentioned herein, any and all of the storage operation, the data collection operation, and the selection operation of the plurality of sensor inputs may be adapted, optimized, learned, or otherwise self-organized by the system.

**[1458]** In implementations, a system for self-organizing collection and storage of data collection in a manufacturing environment can include a data collector for handling a plurality of sensor inputs from various sensors. Such sensors can be a component of the data collector, external to the data collector (e.g., external sensors or components of different data collector(s)), or a combination thereof. The plurality of

sensor inputs can be configured to sense at least one of an operational mode, a fault mode, and a health status of at least one target system. Examples of such target systems include but are not limited to a power system, a conveyor system, a generator, an assembly line system, a wafer handling system, a chemical vapor deposition system, an etching system, a printing system, a robotic handling system, a component assembly system, an inspection system, a robotic assembly system, and a semi-conductor production system. The system can also include a self-organizing system that can be configured for self-organizing at least one of: (i) a storage operation of the data; (ii) a data collection operation of the sensors that provide the plurality of sensor inputs, and (iii) a selection operation of the plurality of sensor input, as is described herein.

**[1459]** In aspects, the system can include a swarm **12006** of mobile data collectors (e.g., data collectors **12008**). Further, in additional or alternative aspects, the self-organizing system can generate, iterate, optimize, etc. a storage specification for organizing storage of the data. The storage specification, e.g., can specify which data will be stored for local storage in the power generation environment, and which data will be output for streaming via a network connection (e.g., network **12010**) from the power generation environment. Other data collection, generation, and/or storage operations can be performed or enabled by the system, as is described herein.

**[1460]** In a non-limiting example, the system can include a plurality of sensors configured to sense various parameters in the environment of a wafer handling system as a target system. Vibration sensors, fluid flow sensors, pressure sensors, gas sensors, temperature sensors, and the like may be utilized by the system to generate data regarding the operation of the wafer handling system. As mentioned herein, any and all of the storage operation, the data collection operation, and the selection operation of the plurality of sensor inputs may be adapted, optimized, learned, or otherwise self-organized by the system.

**[1461]** Also disclosed are embodiments of an additional or alternative system for self-organizing collection and storage of data collection in refining environment. Such system(s) can include a data collector for handling a plurality of sensor inputs from various sensors. Examples of such refining environments include a chemical refining environment, a pharmaceutical refining environment, a biological refining environment, and a hydrocarbon refining environment, although other refining environments are contemplated by the present disclosure. The sensors utilized can be a component of the data collector, external to the data collector (e.g., external sensors or components of different data collector(s)), or a combination thereof. The plurality of sensor inputs can be configured to sense at least one of an operational mode, a fault mode, and a health status of at least one target system. Examples of such target systems include but are not limited to a power system, a pumping system, a mixing system, a reaction system, a distillation system, a fluid handling system, a heating system, a cooling system, an evaporation system, a catalytic system, a moving system, and a container system.

**[1462]** The system can also include a self-organizing system that can be configured for self-organizing at least one of: (i) a storage operation of the data; (ii) a data collection operation of the sensors that provide the plurality of sensor inputs, and (iii) a selection operation of the plurality of sensor input, as is described herein. In aspects, the system can include a swarm **12006** of mobile data collectors (e.g., data collectors **12008**). Further, in additional or alternative aspects, the self-organizing system can generate, iterate, optimize, etc. a storage specification for organizing storage of the data. The storage specification, e.g., can specify which data will be stored for local storage in the power generation environment, and which data will be output for streaming via a network connection (e.g., network **12010**) from the power generation environment. Other data collection, generation, and/or storage operations can be performed or enabled by the system, as is described herein.

**[1463]** In a non-limiting example, the system can include a plurality of sensors configured to sense various parameters in the refining environment of a heating system as a target system. Temperature sensors, fluid flow sensors, pressure sensors, and the like may be utilized by the system to generate data regarding the operation of the heating system. As mentioned herein, any and all of the storage operation, the data collection operation, and the selection operation of the plurality of sensor inputs may be adapted, optimized, learned, or otherwise self-organized by the system.

**[1464]** In aspects, a system for self-organizing collection and storage of data collection in a distribution environment can include a data collector for handling a plurality of sensor inputs from various sensors. Such sensors can be a component of the data collector, external to the data collector (e.g., external sensors or components of different data collector (s)), or a combination thereof. The plurality of sensor inputs can be configured to sense at least one of an operational mode, a fault mode, and a health status of at least one target system. Examples of such target systems include but are not limited to a power system, a conveyor system, a robotic transport system, a robotic handling system, a packing system, a cold storage system, a hot storage system, a refrigeration system, a vacuum system, a hauling system, a lifting system, an inspection system, and a suspension system. The system can also include a self-organizing system that can be configured for self-organizing at least one of: (i) a storage operation of the data; (ii) a data collection operation of the sensors that provide the plurality of sensor inputs, and (iii) a selection operation of the plurality of sensor input, as is described herein.

**[1465]** In aspects, the system can include a swarm **12006** of mobile data collectors (e.g., data collectors **12008**). Further, in additional or alternative aspects, the self-organizing system can generate, iterate, optimize, etc. a storage specification for organizing storage of the data. The storage specification, e.g., can specify which data will be stored for local storage in the power generation environment, and which data will be output for streaming via a network connection (e.g., network **12010**) from the power generation environment. Other data collection, generation, and/or storage operations can be performed or enabled by the system, as is described herein.

**[1466]** In a non-limiting example, the system can include a plurality of sensors configured to sense various parameters in the distribution environment of a refrigeration system as a target system. Power sensors, temperature sensors, vibration sensors, strain gauges, and the like may be utilized by the system to generate data regarding the operation of the turbine. As mentioned herein, any and all of the storage operation, the data collection operation, and the selection

operation of the plurality of sensor inputs may be adapted, optimized, learned, or otherwise self-organized by the system.

**[1467]** The present disclosure describes a method for data collection in an industrial environment having self-organization functionality, the method according to one disclosed non-limiting embodiment of the present disclosure can include analyzing a plurality of sensor inputs, sampling data received from the sensor inputs, and self-organizing at least one of (i) a storage operation of the data, (ii) a collection operation of sensors that provide the plurality of sensor inputs, and (iii) a selection operation of the plurality of sensor inputs.

**[1468]** The present disclosure describes a system for data collection in an industrial environment having automated self-organization, the system according to one disclosed non-limiting embodiment of the present disclosure can include a data collector for handling a plurality of sensor inputs from sensors in the industrial environment and for generating data associated with the plurality of sensor inputs, and a self-organizing system for self-organizing at least one of (i) a storage operation of the data, (ii) a data collection operation of sensors that provide the plurality of sensor inputs, and (iii) a selection operation of the plurality of sensor inputs.

**[1469]** The present disclosure describes a method for data collection in an industrial environment having self-organization functionality, the method according to one disclosed non-limiting embodiment of the present disclosure can include analyzing a plurality of sensor inputs, sampling data received from the sensor inputs, and self-organizing at least one of (i) a storage operation of the data, (ii) a collection operation of sensors that provide the plurality of sensor inputs, and (iii) a selection operation of the plurality of sensor inputs, wherein the selection operation includes receiving a signal relating to at least one condition of the industrial environment, based on the signal, changing at least one of the sensor inputs analyzed and a frequency of the sampling.

**[1470]** A further embodiment of any of the foregoing embodiments of the present disclosure may include situations wherein the at least one condition of the industrial environment is a signal-to-noise ratio of the sampled data.

**[1471]** A further embodiment of any of the foregoing embodiments of the present disclosure may include situations wherein the selection operation includes identifying a target signal to be sensed.

**[1472]** A further embodiment of any of the foregoing embodiments of the present disclosure may include situations wherein the selection operation further includes identifying one or more non-target signals in a same frequency band as the target signal to be sensed, and based on the identified one or more non-target signals, changing at least one of the sensor inputs analyzed and a frequency of the sampling.

**[1473]** A further embodiment of any of the foregoing embodiments of the present disclosure may include situations wherein the selection operation further includes identifying other data collectors sensing in a same signal band as the target signal to be sensed, and based on the identified other data collectors, changing at least one of the sensor inputs analyzed and a frequency of the sampling.

**[1474]** A further embodiment of any of the foregoing embodiments of the present disclosure may include situations wherein the selection operation further includes identifying a level of activity of a target associated with the target signal to be sensed, and based on the identified level of activity, changing at least one of the sensor inputs analyzed and a frequency of the sampling.

**[1475]** A further embodiment of any of the foregoing embodiments of the present disclosure may include situations wherein the selection operation further includes receiving data indicative of environmental conditions near a target associated with the target signal, comparing the received environmental conditions of the target with past environmental conditions near the target or another target similar to the target, and based on the comparison, changing at least one of the sensor inputs analyzed and a frequency of the sampling.

**[1476]** A further embodiment of any of the foregoing embodiments of the present disclosure may include situations wherein the selection operation further includes transmitting at least a portion of the received sampling data to another data collector according to a predetermined hierarchy of data collection.

**[1477]** The present disclosure describes a method for data collection in an industrial environment having self-organization functionality, the method according to one disclosed non-limiting embodiment of the present disclosure can include analyzing a plurality of sensor inputs, sampling data received from the sensor inputs, and self-organizing at least one of (i) a storage operation of the data, (ii) a collection operation of sensors that provide the plurality of sensor inputs, and (iii) a selection operation of the plurality of sensor inputs, wherein the selection operation includes identifying a target signal to be sensed, receiving a signal relating to at least one condition of the industrial environment, based on the signal, changing at least one of the sensor inputs analyzed and a frequency of the sampling, receiving data indicative of environmental conditions near a target associated with the target signal, transmitting at least a portion of the received sampling data to another data collector according to a predetermined hierarchy of data collection, receiving feedback via a network connection relating to a quality or sufficiency of the transmitted data, analyzing the received feedback, and based on the analysis of the received feedback, changing at least one of the sensor inputs analyzed, the frequency of sampling, the data stored, and the data transmitted.

**[1478]** The present disclosure describes a method for data collection in an industrial environment having self-organization functionality, the method according to one disclosed non-limiting embodiment of the present disclosure can include analyzing a plurality of sensor inputs, sampling data received from the sensor inputs, and self-organizing at least one of (i) a storage operation of the data, (ii) a collection operation of sensors that provide the plurality of sensor inputs, and (iii) a selection operation of the plurality of sensor inputs, wherein the selection operation includes identifying a target signal to be sensed, receiving a signal relating to at least one condition of the industrial environment, based on the signal, changing at least one of the sensor inputs analyzed and a frequency of the sampling, receiving data indicative of environmental conditions near a target associated with the target signal, transmitting at least a portion of the received sampling data to another data collector according to a predetermined hierarchy of data collection, receiving feedback via a network connection relating to one or

more yield metrics of the transmitted data, analyzing the received feedback, and based on the analysis of the received feedback, changing at least one of the sensor inputs analyzed, the frequency of sampling, the data stored, and the data transmitted.

**[1479]** The present disclosure describes a method for data collection in an industrial environment having self-organization functionality, the method according to one disclosed non-limiting embodiment of the present disclosure can include analyzing a plurality of sensor inputs, sampling data received from the sensor inputs, and self-organizing at least one of (i) a storage operation of the data, (ii) a collection operation of sensors that provide the plurality of sensor inputs, and (iii) a selection operation of the plurality of sensor inputs, wherein the selection operation includes identifying a target signal to be sensed, receiving a signal relating to at least one condition of the industrial environment, based on the signal, changing at least one of the sensor inputs analyzed and a frequency of the sampling, receiving data indicative of environmental conditions near a target associated with the target signal, transmitting at least a portion of the received sampling data to another data collector according to a predetermined hierarchy of data collection, receiving feedback, via a network connection relating to power utilization, analyzing the received feedback, and based on the analysis of the received feedback, changing at least one of the sensor inputs analyzed, the frequency of sampling, the data stored, and the data transmitted.

**[1480]** The present disclosure describes a method for data collection in an industrial environment having self-organization functionality, the method according to one disclosed non-limiting embodiment of the present disclosure can include analyzing a plurality of sensor inputs, sampling data received from the sensor inputs, and self-organizing at least one of (i) a storage operation of the data, (ii) a collection operation of sensors that provide the plurality of sensor inputs, and (iii) a selection operation of the plurality of sensor inputs, wherein the selection operation includes identifying a target signal to be sensed, receiving a signal relating to at least one condition of the industrial environment, based on the signal, changing at least one of the sensor inputs analyzed and a frequency of the sampling, receiving data indicative of environmental conditions near a target associated with the target signal, transmitting at least a portion of the received sampling data to another data collector according to a predetermined hierarchy of data collection, receiving feedback via a network connection relating to a quality or sufficiency of the transmitted data, analyzing the received feedback, and based on the analysis of the received feedback, executing a dimensionality reduction algorithm on the sensed data.

**[1481]** A further embodiment of any of the foregoing embodiments of the present disclosure may include situations wherein the dimensionality reduction algorithm is one or more of a Decision Tree, Random Forest, Principal Component Analysis, Factor Analysis, Linear Discriminant Analysis, Identification based on correlation matrix, Missing Values Ratio, Low Variance Filter, Random Projections, Nonnegative Matrix Factorization, Stacked Auto-encoders, Chi-square or Information Gain, Multidimensional Scaling, Correspondence Analysis, Factor Analysis, Clustering, and Bayesian Models.

**[1482]** A further embodiment of any of the foregoing embodiments of the present disclosure may include situations wherein the dimensionality reduction algorithm is performed at a data collector.

**[1483]** A further embodiment of any of the foregoing embodiments of the present disclosure may include situations wherein executing the dimensionality reduction algorithm includes sending the sensed data to a remote computing device.

**[1484]** The present disclosure describes a method for data collection in an industrial environment having self-organization functionality, the method according to one disclosed non-limiting embodiment of the present disclosure can include analyzing a plurality of sensor inputs, sampling data received from the sensor inputs, and self-organizing at least one of (i) a storage operation of the data, (ii) a collection operation of sensors that provide the plurality of sensor inputs, and (iii) a selection operation of the plurality of sensor inputs, wherein the selection operation includes identifying a target signal to be sensed, receiving a signal relating to at least one condition of the industrial environment, based on the signal, changing at least one of the sensor inputs analyzed and a frequency of the sampling, receiving data indicative of environmental conditions near a target associated with the target signal, transmitting at least a portion of the received sampling data to another data collector according to a predetermined hierarchy of data collection, receiving feedback via a network connection relating to at least one of a bandwidth and a quality or of the network connection, analyzing the received feedback, and based on the analysis of the received feedback, changing at least one of the sensor inputs analyzed, the frequency of sampling, the data stored, and the data transmitted.

**[1485]** The present disclosure describes a system for self-organizing collection and storage of data collection in a power generation environment, the system according to one disclosed non-limiting embodiment of the present disclosure can include a data collector for handling a plurality of sensor inputs from sensors in the power generation environment, wherein the plurality of sensor inputs is configured to sense at least one of an operational mode, a fault mode, and a health status of at least one target system selected from a group consisting of a fuel handling system, a power source, a turbine, a generator, a gear system, an electrical transmission system, and a transformer, and a self-organizing system for self-organizing at least one of (i) a storage operation of the data, (ii) a data collection operation of the sensors that provide the plurality of sensor inputs, and (iii) a selection operation of the plurality of sensor inputs.

**[1486]** A further embodiment of any of the foregoing embodiments of the present disclosure may include situations wherein the self-organizing system organizes a swarm of mobile data collectors to collect data from a plurality of target systems.

**[1487]** A further embodiment of any of the foregoing embodiments of the present disclosure may include situations wherein the self-organizing system generates a storage specification for organizing storage of the data, the storage specification specifying data for local storage in the power generation environment and specifying data for streaming via a network connection from the power generation environment.

**[1488]** The present disclosure describes a system for self-organizing collection and storage of data collection in an energy source extraction environment, the system according to one disclosed non-limiting embodiment of the present

disclosure can include a data collector for handling a plurality of sensor inputs from sensors in the energy extraction environment, wherein the plurality of sensor inputs is configured to sense at least one of an operational mode, a fault mode, and a health status of at least one target system selected from a group consisting of a hauling system, a lifting system, a drilling system, a mining system, a digging system, a boring system, a material handling system, a conveyor system, a pipeline system, a wastewater treatment system, and a fluid pumping system, and a self-organizing system for self-organizing at least one of (i) a storage operation of the data, (ii) a data collection operation of the sensors that provide the plurality of sensor inputs, and (iii) a selection operation of the plurality of sensor inputs.

**[1489]** A further embodiment of any of the foregoing embodiments of the present disclosure may include situations wherein the self-organizing system organizes a swarm of mobile data collectors to collect data from a plurality of target systems.

**[1490]** A further embodiment of any of the foregoing embodiments of the present disclosure may include situations wherein the self-organizing system generates a storage specification for organizing storage of the data, the storage specification specifying data for local storage in the energy extraction environment and specifying data for streaming via a network connection from the energy extraction environment.

**[1491]** A further embodiment of any of the foregoing embodiments of the present disclosure may include situations wherein the energy source extraction environment is a coal mining environment.

**[1492]** A further embodiment of any of the foregoing embodiments of the present disclosure may include situations wherein the energy source extraction environment is a metal mining environment.

**[1493]** A further embodiment of any of the foregoing embodiments of the present disclosure may include situations wherein the energy source extraction environment is a mineral mining environment.

**[1494]** A further embodiment of any of the foregoing embodiments of the present disclosure may include situations wherein the energy source extraction environment is an oil drilling environment.

**[1495]** The present disclosure describes a system for self-organizing collection and storage of data collection in a manufacturing environment, the system according to one disclosed non-limiting embodiment of the present disclosure can include a data collector for handling a plurality of sensor inputs from sensors in the power generation environment, wherein the plurality of sensor inputs is configured to sense at least one of an operational mode, a fault mode, and a health status of at least one target system selected from a group consisting of a power system, a conveyor system, a generator, an assembly line system, a wafer handling system, a chemical vapor deposition system, an etching system, a printing system, a robotic handling system, a component assembly system, an inspection system, a robotic assembly system, and a semi-conductor production system, and a self-organizing system for self-organizing at least one of (i) a storage operation of the data, (ii) a data collection operation of the sensors that provide the plurality of sensor inputs, and (iii) a selection operation of the plurality of sensor inputs.

**[1496]** A further embodiment of any of the foregoing embodiments of the present disclosure may include situations wherein the self-organizing system organizes a swarm of mobile data collectors to collect data from a plurality of target systems.

**[1497]** A further embodiment of any of the foregoing embodiments of the present disclosure may include situations wherein the self-organizing system generates a storage specification for organizing the storage of the data, the storage specification specifying data for local storage in the manufacturing environment and specifying data for streaming via a network connection from the manufacturing environment.

**[1498]** The present disclosure describes a system for self-organizing collection and storage of data collection in a refining environment, the system according to one disclosed non-limiting embodiment of the present disclosure can include a data collector for handling a plurality of sensor inputs from sensors in the power generation environment, wherein the plurality of sensor inputs is configured to sense at least one of an operational mode, a fault mode and a health status of at least one target system selected from a group consisting of a power system, a pumping system, a mixing system, a reaction system, a distillation system, a fluid handling system, a heating system, a cooling system, an evaporation system, a catalytic system, a moving system, and a container system, and a self-organizing system for self-organizing at least one of (i) a storage operation of the data, (ii) a data collection operation of the sensors that provide the plurality of sensor inputs, and (iii) a selection operation of the plurality of sensor inputs.

**[1499]** A further embodiment of any of the foregoing embodiments of the present disclosure may include situations wherein the self-organizing system organizes a swarm of mobile data collectors to collect data from a plurality of target systems.

**[1500]** A further embodiment of any of the foregoing embodiments of the present disclosure may include situations wherein the self-organizing system generates a storage specification for organizing the storage of the data, the storage specification specifying data for local storage in the refining environment and specifying data for streaming via a network connection from the refining environment.

**[1501]** A further embodiment of any of the foregoing embodiments of the present disclosure may include situations wherein the refining environment is a chemical refining environment.

**[1502]** A further embodiment of any of the foregoing embodiments of the present disclosure may include situations wherein the refining environment is a pharmaceutical refining environment.

**[1503]** A further embodiment of any of the foregoing embodiments of the present disclosure may include situations wherein the refining environment is a biological refining environment.

**[1504]** A further embodiment of any of the foregoing embodiments of the present disclosure may include situations wherein the refining environment is a hydrocarbon refining environment.

**[1505]** The present disclosure describes a system for self-organizing collection and storage of data collection in a distribution environment, the system according to one disclosed non-limiting embodiment of the present disclosure can include a data collector for handling a plurality of sensor

inputs from sensors in the distribution environment, wherein the plurality of sensor inputs is configured to sense at least one of an operational mode, a fault mode and a health status of at least one target system selected from a group consisting of a power system, a conveyor system, a robotic transport system, a robotic handling system, a packing system, a cold storage system, a hot storage system, a refrigeration system, a vacuum system, a hauling system, a lifting system, an inspection system, and a suspension system, and a self-organizing system for self-organizing at least one of (i) a storage operation of the data, (ii) a data collection operation of the sensors that provide the plurality of sensor inputs, and (iii) a selection operation of the plurality of sensor inputs.

**[1506]** A further embodiment of any of the foregoing embodiments of the present disclosure may include situations wherein the self-organizing system organizes a swarm of mobile data collectors to collect data from a plurality of target systems.

**[1507]** A further embodiment of any of the foregoing embodiments of the present disclosure may include situations wherein the self-organizing system generates a storage specification for organizing the storage of the data, the storage specification specifying data for local storage in the distribution environment and specifying data for streaming via a network connection from the distribution environment.

**[1508]** Referencing FIG. **165**, an example system **12200** for self-organized, network-sensitive data collection in an industrial environment is depicted. The system **12200** includes an industrial system **12202** having a number of components **12204**, and a number of sensors **12206**, wherein each of the sensors **12206** is operatively coupled to at least one of the components **12204**. The selection, distribution, type, and communicative setup of sensors depends upon the application of the system **12200** and/or the context.

**[1509]** In certain embodiments, sensor data values **12204** are provided to a data collector **12208**, which may be in communication with multiple sensors **12206** and/or with a controller **12212**. In certain embodiments, a plant computer **12210** is additionally or alternatively present. In the example system, the controller **12212** is structured to functionally execute operations of the sensor communication circuit **12224**, sensor data storage profile circuit **12226**, sensor data storage implementation circuit **12228**, storage planning circuit **12230**, and/or haptic feedback circuit **12232**. The controller **12212** is depicted as a separate device for clarity of description. Aspects of the controller **12212** may be present on the sensors **12206**, the data controller **12208**, the plant computer **12210**, and/or on a cloud computing device **12214**. In certain embodiments described throughout this disclosure, all aspects of the controller **12212** or other controllers may be present in another device depicted on the system **12200**. The plant computer **12210** represents local computing resources, for example processing, memory, and/or network resources, that may be present and/or in communication with the industrial system **12200**. In certain embodiments, the cloud computing device **12214** represents computing resources externally available to the industrial system **12202**, for example over a private network, intra-net, through cellular communications, satellite communications, and/or over the internet. In certain embodiments, the data controller **12208** may be a computing device, a smart sensor, a MUX box, or other data collection device capable to receive data from multiple sensors and to pass-through the data and/or store data for later transmission. An example data controller **12208** has no storage and/or limited storage, and selectively passes sensor data therethrough, with a subset of the sensor data being communicated at a given time due to bandwidth considerations of the data controller **12208**, a related network, and/or imposed by environmental constraints. In certain embodiments, one or more sensors and/or computing devices in the system **12200** are portable devices such as the user associated device **12216** associated with a user **12218**, for example a plant operator walking through the industrial system may have a smart phone, which the system **12200** may selectively utilize as a data controller **12208**, sensor **12206**—for example to enhance communication throughput, sensor resolution, and/or as a primary method for communicating sensor data values **12244** to the controller **12212**. The system **12200** depicts the controller **12212**, the sensors **12206**, the data controller **12208**, the plant computer **12210**, and/or the cloud computing device **12214** having a memory storage for storing sensor data thereon, any one or more of which may not have a memory storage for storing sensor data thereon.

**[1510]** The example system **12200** further includes a mesh network **12220** having a plurality of network nodes depicted thereupon. The mesh network **12220** is depicted in a single location for convenience of illustration, but it will be understood that any network infrastructure that is within the system **12200**, and/or within communication with the system **12200**, including intermittently, is contemplated within the system network. Additionally, any or all of the cloud server **12214**, plant computer **12210**, controller **12212**, data controller **12208**, any network capable sensor **12206**, and/or user associated device **12218** may be a part of the network for the system, including a mesh network **12220**, during at least certain operating conditions of the system **12200**. Additionally, or alternatively, the system **12200** may utilize a hierarchical network, a peer-to-peer network, a peer-to-peer network with one or more super-nodes, combinations of these, hybrids of these, and/or may include multiple networks within the system **12200** or in communication with the system. It will be appreciated that certain features and operations of the present disclosure are beneficial to only one or more than one of these types of networks, certain features and operations of the present disclosure are beneficial to any type of network, and certain features and operations are particularly beneficial to combinations of these networks, and/or to networks having multiple networking options within the network, where the benefits relate to the utilization of options of any type, or where the benefits relate to one or more options being of a specific network type.

**[1511]** Referencing FIG. **166**, an example apparatus **12222** includes the controller **12212** having a sensor communication circuit **12224** that interprets a number of sensor data values **12244** from the number of sensors **12206** and a system collaboration circuit **12228** that communicates at least a portion of the number of sensor data values (e.g., sensor data **12244** to target storage **12252**) to a storage target computing device according to a sensor data transmission protocol **12232**. The target computing device includes any device in the system having memory that is the target location for the selected sensor data **12252**. For example, the cloud server **12214**, plant computer **12210**, the user associated device **12218**, and/or another portion of the controller **12212** that communicates with the sensor **12206** and/or data controller **12208** over the network of the system. The target computing device may be a short-term target (e.g., until a

process operation is completed), a medium-term target (e.g., to be held until certain processing operations are completed on the data, and/or until a periodic data migration occurs), and/or a long-term target (e.g., to be held for the course of a data retention policy, and/or until a long-term data migration is planned), and/or the data storage target for an unknown period (e.g., data is passed to a cloud server **12214**, whereupon the system **12200**, in certain embodiments, does not maintain control of the data). In certain embodiments, the target computing device is the next computing device in the system planned to store the data. In certain embodiments, the target computing device is the next computing device in the system where the data will be moved, where such a move occurs across any aspect of the network of the system **12200**.

**[1512]** The example controller **12212** includes a transmission environment circuit **12226** that determines transmission conditions **12254** corresponding to the communication of the at least a portion of the number of sensor data values **12252** to the storage target computing device. Transmission conditions **12254** include any conditions affecting the transmission of the data. For example, referencing FIG. **169**, example and non-limiting transmission conditions **12254** are depicted including environmental conditions **12272** (e.g., EM noise, vibration, temperature, the presence and layout of devices or components affecting transmission, such as metal, conductive, or high density) including environmental conditions **12272** that affect communications directly, and environmental conditions **12272** that affect network devices such as routers, servers, transmitters/transceivers, and the like. An example transmission conditions **12254** includes a network performance **12274**, such as the specifications of network equipment or nodes, specified limitations of network equipment or nodes (e.g., utilization limits, authorization for usage, available power, etc.), estimated limitations of the network (e.g., based on equipment temperatures, noise environment, etc.), and/or actual performance of the network (e.g., as observed directly such as by timing messages, sending diagnostic messages, or determining throughput, and/or indirectly by observing parameters such as memory buffers, arriving messages, etc. that tend to provide information about the performance of the network). Another example transmission condition **12254** includes network parameters **12276**, such as timing parameters **12278** (e.g., clock speeds, message speeds, synchronous speeds, asynchronous speeds, and the like), protocol selections **12280** (e.g., addressing information, message sizes including administrative support bits within messages, and/or speeds supported by the protocols present or available), file type selections **12282** (e.g., data transfer file types, stored file types, and the network implications such as how much data must be transferred before data is at least partially readable, how to determine data is transferred, likely or supported file sizes, and the like), streaming parameter selections **12284** (e.g., streaming protocols, streaming speeds, priority information of streaming data, available nodes and/or computing devices to manage the streaming data, and the like), and/or compression parameters **12286** (e.g., compression algorithm and type, processing implications at each end of the message, lossy versus lossless compression, how much information must be passed prior to usable data being available, and the like).

**[1513]** Referencing FIG. **170**, certain further non-limiting examples of transmission conditions **12254** corresponding to the communication of the sensor data **12252** are depicted. Example and non-limiting transmission conditions **12254** include a mesh network need **12288** (e.g., to rearrange the mesh to balance throughput), a parent node connectivity change **12290** in a hierarchically arranged network (e.g., the parent node has lost connectivity, re-gained connectivity, and/or has changed to a different set of child nodes and/or higher nodes), and/or a network super-node in a hybrid peer-to-peer application-layer network has been replaced **12292**. A super-node, as utilized herein, is a node having additional capability from other peer-to-peer nodes. Such additional capability may be by design only—for example a super-node may connect in a different manner and/or to nodes outside of the peer-to-peer node system. In certain embodiments, the super-node may additionally or alternatively have more processing power, increased network speed or throughput access, and/or more memory (e.g., for buffering, caching, and/or short term storage) to provide more capability to meet the functions of the super-node.

**[1514]** An example transmission condition **12254** includes a node in a mesh or hierarchical network detected as malicious (e.g., from another supervisory process, heuristically, or as indicated to the system **12200**); a peer node has experienced a bandwidth or connectivity change **12296** (e.g., mesh network peer that was forwarding packets has lost connectivity, gained additional bandwidth, had a reduction in available bandwidth, and/or has regained connectivity). An example transmission condition **12254** includes a change in a cost of transmitting information **12298** (e.g., cost has increased or decreased, where cost may be a direct cost parameter such as a data transmission subscription cost, or an abstracted cost parameter reflecting overall system priorities, and/or a current cost of delivering information over a network hop has changed), a change has been made in a hierarchical network arrangement (e.g., network arrangement change **12300**) such as to balance bandwidth use in a network tree; and/or a change in a permission scheme **12302** (e.g., a portion of the network relaying sampling data has had a change in permissions, authorization level, or credentials). Certain further example transmission conditions **12254** include the availability of an additional connection type **12304** (e.g., a higher-bandwidth network connection type has become available, and/or a lower-cost network connection type has become available); a change has been made in a network topology **12306** (e.g., a node has gone offline or online, a mesh change has occurred, and/or a hierarchy change has occurred); and/or a data collection client changed a preference or a requirement **12308** (e.g., a data frequency requirement for at least one of the number of sensor values; a data type requirement for at least one of the number of sensor values; a sensor target for data collection; and/or a data collection client has changed the storage target computing device, which may change the network delivery outcomes and routing).

**[1515]** The example controller **12212** includes a network management circuit **12230** that updates the sensor data transmission protocol **12232** in response to the transmission conditions **12254**. For example, where the transmission conditions **12254** indicate that a current routing, protocol, delivery frequency, delivery rate, and/or any other parameter associated with communicating the sensor data **12252** is no longer cost effective, possible, optimal, and/or where an improvement is available, the network management circuit **12230** updates the sensor data transmission protocol **12232**

in response to a lower cost, possible, optimal, and/or improved transmission condition. The example system collaboration circuit **12228** is further responsive to the updated sensor data transmission protocol **12232**—for example, implementing subsequent communications of the sensor data **12252** in compliance with the updated sensor data transmission protocol **12232**, providing a communication to the network management circuit **12230** indicating which aspects of the updated sensor data transmission protocol **12232** cannot be or are not being followed, and/or providing an alert (e.g., to an operator, a network node, controller **12212**, and/or the network management circuit **12230**) indicating that a change is requested, indicating that a change is being implemented, and/or indicating that a requested change cannot be or is not being implemented.

**[1516]** An example system **12200** includes the transmission conditions **12254** being environmental conditions **12272** relating to sensor communication of the number of sensor data values **12252**, where the network management circuit **12230** further analyzes the environmental conditions **12272**, and where updating the sensor data transmission protocol **12232** includes modifying the manner in which the number of sensor data values are transmitted from the number of sensors **12206** to the storage target computing device. An example system further includes a data collector **12208** communicatively coupled to at least a portion of the number of sensors **12206** and responsive to the sensor data transmission protocol **12232**, where the system collaboration circuit **12228** further receives the number of sensor data values **12244** from the at least a portion of the number of sensors, and where the transmission conditions **12254** correspond to at least one network parameter corresponding to the communication of the number of sensor data values from the at least a portion of the number of sensors. Referencing FIG. **171**, a number of example sensor data transmission protocol **12232** values are depicted. An example sensor data transmission protocol **12232** value includes a data collection rate **12310**—for example a rate and/or a frequency at which a sensor **12206** transmits, provides, or samples data, and/or at which the data collector **12208** receives, passes along, stores, or otherwise captures sensor data. An example network management circuit **12230** further updates the sensor data transmission protocol **12232** to modify the data collector **12208** to adjust a data collection rate **12310** for at least one of the number of sensors. Another example sensor data transmission protocol **12232** value includes a multiplexing schedule **12312**, which includes a data collector **12208** and/or a smart sensor configured to provide multiple sensor data values, such as in an alternating or other scheduled manner, and/or to package multiple sensor values into a single message in a configured manner. An example network management circuit **12230** updates the sensor data transmission protocol **12232** to modify a multiplexing schedule of the data collector **12208** and/or smart sensor. Another example sensor data transmission protocol **12232** value includes an intermediate storage operation **12314**, where an intermediate storage is a storage at any location in the system at least one network transmission prior to the target storage computing device. Intermediate storage may be implemented as an on-demand operation, where a request of the data (e.g., from a user, a machine learning operation, or another system component) results in the subsequent transfer from the intermediate storage to the target computing device, and/or the intermediate storage may be implemented to time shift network communications to lower cost and/or lower network utilization times, and/or to manage moment-to-moment traffic on the network. The example network management circuit **12230** updates the sensor data transmission protocol **12232** to command an intermediate storage operation for at least a portion of the number of sensor data values, where the intermediate storage may be on a sensor, data collector, a node in the mesh network, on the controller, on a component, and/or in any other location within the system. An example sensor data transmission protocol **12232** includes a command for further data collection **12316** for at least a portion of the number of sensors—for example because a resolution, rate, and/or frequency of a sensor data provision is not sufficient for some aspect of the system, to provide additional data to a machine learning algorithm, and/or because a prior resource limitation is no longer applicable and further data from one or more sensors is now available. An example sensor data transmission protocol **12232** includes a command to implement a multiplexing schedule **12318**—for example where a data collector **12208** and/or smart sensor is capable to multiplex sensor data but does not do so under all operating conditions, or only does so in response to the multiplexing schedule **12318** of the sensor data transmission protocol **12232**.

**[1517]** An example network management circuit **12230** further updates the sensor data transmission protocol **12232** to adjust a network transmission parameter (e.g., any network parameter **12276**) for at least a portion of the number of sensor values. For example, certain network parameters that are not control variables and/or are not currently being controlled are transmission conditions **12254**, and certain network parameters are control variables and subject to change in response to the data transmission protocol **12232**, and/or the network management circuit **12230** can optionally take control of certain network parameters to make them control variables. An example network management circuit **12230** further updates the sensor data transmission protocol **12232** to change any one or more of: a frequency of data transmitted; a quantity of data transmitted; a destination of data transmitted (including a target or intermediate destination, and/or a routing); a network protocol used to transmit the data; and/or a network path (e.g., providing a redundant path to transmit the data (e.g., where high noise, high network loss, and/or critical data are involved, the network management circuit **12230** may determine that the system operations are improved with redundant pathing for some of the data)). An example network management circuit **12230** further updates the sensor data transmission protocol **12232**, such as to: bond an additional network path to transmit the data (e.g., the network management circuit **12230** may have authority to bring additional network resources online, and/or selectively access additional network resources); rearrange a hierarchical network to transmit the data (e.g., add or remove a hierarchy layer, change a parent-child relationship, etc., for example, to provide critical data with additional paths, fewer layers, and/or a higher priority path); rebalance a hierarchical network to transmit the data; and/or reconfigure a mesh network to transmit the data. An example network management circuit **12230** further updates the sensor data transmission protocol **12232** to delay a data transmission time, and/or delay the data transmission time to a lower cost transmission time.

**[1518]** An example network management circuit further updates the sensor data transmission protocol **12232** to

reduce the amount of information sent at one time over the network and/or updates the sensor data transmission protocol to adjust a frequency of data sent from a second data collector (e.g., an offset data collector within or not within the direct purview of the network management circuit **12230**, but where network resource utilization from the second data collector competes with utilization of the first data collector).

**[1519]** An example network management circuit **12230** further adjusts an external data access frequency **12234**—for example where the expert system **12242** and/or the machine learning algorithm **12248** access external data **12246** to make continuous improvements to the system (e.g., accessing information outside of the sensor data values **12244**, and/or from offset systems or aggregated cloud based data), and/or an external data access timing (**12236**). The control of external data **12246** access allows for control of network utilization when the system is low on resources, when high fidelity and/or frequency of sensor data values **12244** is prioritized, and/or shifting of resource utilization into lower cost portions of the operating space of the system. In certain embodiments, the system collaboration circuit **12228** accesses the external data **12246**, and is responsive to the adjusted external data access frequency **12234** and/or external data access timing value **12236**. An example network management circuit **12230** further adjusts a network utilization value **12238**—for example to keep system utilization operations below a threshold to reserve margin and/or to avoid the need for capital cost upgrades to the system due to capacity limitations. An example network management circuit **12230** adjusts the network utilization value **12238** to utilize bandwidth at a lower cost bandwidth time—for example when competing traffic is lower, when network utilization does not adversely affect other system processes, and/or when power consumption costs are lower.

**[1520]** An example network management circuit further **12230** enables utilizing a high-speed network, and/or requests a higher cost bandwidth access, for example when system process improvements are sufficient that higher costs are justified, to meet a minimum delivery requirement for data, and/or to move aging data from the system before it becomes obsolete or must be deleted to make room for subsequent data.

**[1521]** An example network management circuit **12230** further includes an expert system **12242**, where the updating the sensor data transmission protocol **12232** is further in response to operations of the expert system **12242**. The self-organized, network-sensitive data collection system may manage or optimize any such parameters or factors noted throughout this disclosure, individually or in combination, using an expert system, which may involve a rule-based optimization, optimization based on a model of performance, and/or optimization using machine learning/artificial intelligence, optionally including deep learning approaches, or a hybrid or combination of the above. Referencing FIG. **165**, a number of non-limiting examples of expert systems **12242**, any one or more of which may be present in embodiments having an expert system **12242**. Without limitation to any other aspect of the present disclosure for expert systems, machine learning operations, and/or optimization routines, example expert systems **12242** include a rule-based system **12202** (e.g., seeded by rules based on modeling, expert input, operator experience, or the like); a model-based system **12204** (e.g., modeled responses or relationships in the system informing certain operations of the expert system, and/or working with other operations of the expert system); a neural-net system (e.g., including rules, state machines, decision trees, conditional determinations, and/or any other aspects); a Bayesian-based system **12208** (e.g., statistical modeling, management of probabilistic responses or relationships, and other determinations for managing uncertainty); a fuzzy logic-based system **12210** (e.g., determining fuzzification states for various system parameters, state logic for responses, and de-fuzzification of truth values, and/or other determinations for managing vague states of the system); and/or a machine learning system **12212** (e.g., recursive, iterative, or other long-term optimization or improvement of the expert system, including searching data, resolutions, sampling rates, etc. that are not within the scope of the expert system to determine if improved parameters are available that are not presently utilized), which may be in addition to or an embodiment of the machine learning algorithm **12248**. Any aspect of the expert system **12242** may be re-calibrated, deleted, and/or added during operations of the expert system **12242**, including in response to updated information learned by the system, provided by a user or operator, provided by the machine learning algorithm **12248**, information from external data **12246** and/or from offset systems.

**[1522]** An example network management circuit **12230** further includes a machine learning algorithm **12248**, where updating the sensor data transmission protocol **12232** is further in response to operations of the machine learning algorithm **12248**. An example machine learning algorithm **12248** utilizes a machine learning optimization routine, and upon determining that an improved sensor data transmission protocol **12232** is available, the network management circuit **12230** provides the updated sensor data transmission protocol **12232** which is utilized by the system collaboration circuit **12228**. In certain embodiments, the network management circuit **12230** may perform various operations such as supplying a sensor data transmission protocol **12232** which is utilized by the system collaboration circuit **12228** to produce real-world results, applies modeling to the system (either first principles modeling based on system characteristics, a model utilizing actual operating data for the system, a model utilizing actual operating data for an offset system, and/or combinations of these) to determine what an outcome of a given sensor data transmission protocol **12232** will be or would have been (including, for example, taking extra sensor data beyond what is utilized to support a process operated by the system, and/or utilizing external data **12246** and/or benchmarking data **12240**), and/or applying randomized changes to the sensor data transmission protocol **12232** to ensure that an optimization routine does not settle into a local optimum or non-optimal condition.

**[1523]** An example machine learning algorithm **12248** further utilizes feedback data including the transmission conditions **12254**, at least a portion of the number of sensor values **12244**; and/or where the feedback data includes benchmarking data **12240**. Referencing FIG. **172**, non-limiting examples of benchmarking data **12240** are depicted. Benchmarking data **12240** may reference, generally, expected data (e.g., according to an expert system **12242**, user input, prior experience, and/or modeling outputs), data from an offset system (including as adjusted for differences in the contemplated system **12200**), aggregated data for similar systems (e.g., as external data **12246** which may be

cloud-based), and the like. Benchmarking data may be relative to the entire system, the network, a node on the network, a data collector, and/or a single sensor or selected group of sensors. Example and non-limiting benchmarking data includes a network efficiency **12320** (e.g., throughput capability, power utilization, quality and/or integrity of communications relative to the infrastructure, load cycle, and/or environmental conditions of the system **12200**), a data efficiency **12322** (e.g., a percentage of overall successful data captured relative to a target value, a description of data gaps relative to a target value, and/or may be focused on critical or prioritized data), a comparison with offset data collectors **12324** (e.g., comparing data collectors in the system having a similar environment, data collection responsibility, or other characteristic making the comparison meaningful), a throughput efficiency **12326** (e.g., a utilization of the available throughput, a variability indicator—such as high variability being an indication that a network may be oversized or have further transmission capability, or high variability being an indication that the network is responsive to cost avoidance opportunities—or both depending upon the further context which can be understood looking at other information such as why the utilization differences occur), a data efficacy **12328** (e.g., a determination that captured parameters are result effective, strong control parameters, and/or highly predictive parameters, and that efficacious data is taken at acceptable resolution, sampling rate, and the like), a data quality **12330** (e.g., degradation of the data due to noise, deconvolution errors, multiple calculation operations and rounding, compression, packet losses, etc.), a data precision **12342** (e.g., a determination that sufficiently precise data is taken, preserved during communications, and preserved during storage), a data accuracy **12340** (e.g., a determination that corrupted data, degradation through transmission and/or storage, and/or time lag results in data that is alone inaccurate, or inaccurate as applied in a time sequence or other configuration), a data frequency **12338** (e.g., a determination that data as communicated has sufficient time and/or frequency domain resolution to determine the responses of interest), an environmental response **12336** (e.g., environmental effects on the network are sufficiently managed to maintain other aspects of the data), a signal diversity **12332** (e.g., whether systematic gaps exist which increase the consequences of degradation—e.g., 1% of the data is missing, but it's s systematically a single critical sensor; do critical sensed parameters have multiple potential sources of information), a critical response (is data sufficient to detect critical responses, such as support for a sensor fusion operation and/or a pattern recognition operation), and/or a mesh networking coherence **12334** (e.g., keeping processors, nodes, and other network aspects together on a single view of applicable memory states).

**[1524]** Referencing FIG. **173**, certain further non-limiting examples of benchmarking data **12240** are depicted. Example and non-limiting benchmarking data **12240** includes a data coverage **12346** (e.g., what fraction of the desired data, critical data, etc. was successfully communicated and captured; how is the data distributed throughout the system), a target coverage **12344** (e.g., does a component or process of the system have sufficient time and spatial resolution of sensed values), a motion efficiency **12348** (e.g., reflecting an amount of time, number of steps, or extent of motion required to accomplish a given result, such as where an action is required by a human operator, robotic element, drone, or the like to accomplish an action), a quality of service commitment **12358** (e.g., an agreement, formal or informal commitment, and/or best practice quality of service such as maximum data gaps, minimum up-times, minimum percentages of coverage), a quality of service guarantee **12360** (e.g., a formal agreement to a quality of service with known or modeled consequences that can act in a cost function, etc.), a service level agreement **12362** (e.g., minimum uptimes, data rates, data resolutions, etc., which may be driven by industry practices, regulatory requirements, and/or formal agreements that certain parameters, detection for certain components, or detection for certain processes in the system will meet data delivery requirements in type, resolution, sample rate, etc.), a predetermined quality of service value (e.g., a user-defined value, a policy for the operator of the system, etc.), and/or a network obstruction value **12364**. Example and non-limiting network obstruction values **12364** include a network interference value (e.g., environmental noise, traffic on the network, collisions, etc.), a network obstruction value (e.g., a component, operation, and/or object obstructing wireless or wired communication in a region of the network, or over the entire network), and/or an area of impeded network connectivity (e.g., loss of connectivity for any reason, which may be normal at least intermittently during operations, or power loss, movement of objects through the area, movement of a network node through the area (e.g., a smart phone being utilized as a node), etc.). In certain embodiments, a network obstruction value **12364** may be caused by interference from a component of the system, an interference caused by one or more of the sensors (e.g., due to a fault or failure, or operation outside an expected range), interference caused by a metallic (or other conductive) object, interference caused by a physical obstruction (e.g., a dense object blocking or reducing transparency to wireless transmissions); an attenuated signal caused by a low power condition (e.g., a brown-out, scheduled power reduction, low battery, etc.); and/or an attenuated signal caused by a network traffic demand in a portion of the network (e.g., a node or group of nodes has high traffic demand during operations of the system).

**[1525]** Yet another example system includes an industrial system including a number of components, and a number of sensors each operatively coupled to at least one of the number of components; a sensor communication circuit that interprets a number of sensor data values from the number of sensors; a system collaboration circuit that communicates at least a portion of the number of sensor data values over a network having a number of nodes to a storage target computing device according to a sensor data transmission protocol; a transmission environment circuit that determines transmission feedback corresponding to the communication of the at least a portion of the number of sensor data values over the network; and a network management circuit updates the sensor data transmission protocol in response to the transmission feedback. The example system collaboration circuit is further responsive to the updated sensor data transmission protocol.

**[1526]** Referencing FIG. **167**, an example apparatus **12256** for self-organized, network-sensitive data collection in an industrial environment for an industrial system having a network with a number of nodes is depicted. In addition to the aspects of apparatus **12222**, apparatus **12256** includes the system collaboration circuit **12228** further sending an

alert to at least one of the number of nodes (e.g., as a node communication **12258**) in response to the updated sensor data transmission protocol **12232**. In certain embodiments, updating the sensor data transmission protocol **12232** includes the network management circuit **12230** including node control instructions, such as providing instructions to rearrange a mesh network including the number of nodes, providing instructions to rearrange a hierarchical data network including the number of nodes, rearranging a peer-to-peer data network including the number of nodes, rearranging a hybrid peer-to-peer data network including the number of nodes. In certain embodiments, the system collaboration circuit **12228** provides node control instructions as one or more node communications **12258**.

**[1527]** In certain embodiments, updating the sensor data transmission protocol **12232** includes the network management circuit **12230** providing instructions to reduce a quantity of data sent over the network; providing instructions to adjust a frequency of data capture sent over the network; providing instructions to time-shift delivery of at least a portion of the number of sensor values sent over the network (e g, utilizing intermediate storage); providing instructions to change a network protocol corresponding to the network; providing instructions to reduce a throughput of at least one device coupled to the network; providing instructions to reduce a bandwidth use of the network; providing instructions to compress data corresponding to at least a portion of the number of sensor values sent over the network; providing instructions to condense data corresponding to at least a portion of the number of sensor values sent over the network (e.g., providing a relevant subset, reduced sample rate data, etc.); providing instructions to summarize data (e.g., providing a statistical description, an aggregated value, etc.) corresponding to at least a portion of the number of sensor values sent over the network; providing instructions to encrypt data corresponding to at least a portion of the number of sensor values sent over the network (e.g., to enable using an alternate, less secure network path, and/or to access another network path requiring encryption); providing instructions to deliver data corresponding to at least a portion of the number of sensor values to a distributed ledger; providing instructions to deliver data corresponding to at least a portion of the number of sensor values to a central server (e.g., the plant computer **12210** and/or cloud server **12214**); providing instructions to deliver data corresponding to at least a portion of the number of sensor values to a super-node; and providing instructions to deliver data corresponding to at least a portion of the number of sensor values redundantly across a number of network connections. In certain embodiments, updating the sensor data transmission includes providing instructions to deliver data corresponding to at least a portion of the number of sensor values to one of the components (e.g., where one or more components **12204** in the system has memory storage and is communicatively accessible to the sensor **12206**, the data collector **12208**, and/or the network), and/or where the one of the components is communicatively coupled to the sensor providing the data corresponding to at least a portion of the number of sensor values (e.g., where the data to be stored on the component **12204** is the component the data was measured for, or is in proximity to the sensor **12206** taking the data).

**[1528]** An example network includes a mesh network where the network management circuit **12230** further updates the sensor data transmission protocol **12232** to provide instructions to eject (e.g., remove from the mesh map, take it out of service, etc.) one of the number of nodes from the mesh network. An example network includes a peer-to-peer network, where the network management circuit **12230** further updates the sensor data transmission protocol **12232** to provide instructions to eject one of the number of nodes from the peer-to-peer network.

**[1529]** An example network management circuit **12230** further updates the sensor data transmission protocol **12232** to cache (e.g., as a sensor data cache **12260**) at least a portion of the number of sensor values **12252**. In certain further embodiments, the network management circuit **12230** further updates the sensor data transmission protocol **12232** to communicate the cached sensor values **12260** in response to at least one of: a determination that the cached data is requested (e.g., a user, model, machine learning algorithm, expert system, etc. has requested the data); a determination that the network feedback indicates communication of the cached data is available (e.g., a prior limitation on the network leading the network management circuit **12230** to direct caching is now lifted or improved); and/or a determination that higher priority data is present that requires utilization of cache resources holding the cached data **12260**.

**[1530]** An example system **12200** for self-organized, network-sensitive data collection in an industrial environment includes an industrial system **12202** having a number of components **12204** and a number of sensors **12206** each operatively coupled to at least one of the number of components **12204**. A sensor communication circuit **12224** interprets the number of sensor data values **12244** from the number of sensors at a predetermined frequency. The system collaboration circuit **12228** that communicates at least a portion of the number of sensor data values **12252** over a network having a number of nodes to a storage target computing device according to the sensor data transmission protocol **12232**, where the sensor data transmission protocol **12232** includes a predetermined hierarchy of data collection and the predetermined frequency. An example data management circuit **12230** adjusts the predetermined frequency in response to transmission conditions **12254**, and/or in response to benchmarking data **12240**.

**[1531]** An example system **12200** for self-organized, network-sensitive data collection in an industrial environment includes an industrial system **12202** having a number of components **12204**, and a number of sensors **12206** each operatively coupled to at least one of the number of components **12204**. The sensor communication circuit **12224** interprets a number of sensor data values **12244** from the number of sensors **12206** at a predetermined frequency, and the system collaboration circuit **12228** communicates at least a portion of the number of sensor data values **12252** over a network having a number of nodes to a storage target computing device according to a sensor data transmission protocol. A transmission environment circuit **12226** determines transmission feedback (e.g., transmission conditions **12254**) corresponding to the communication of the at least a portion of the number of sensor data values **12252** over the network. A network management circuit **12230** updates the sensor data transmission protocol **12232** in response to the transmission feedback **12254**, and a network notification circuit **12268** provides an alert value **12264** in response to the updated sensor data transmission protocol **12232**.

Example alert values **12264** include a notification to an operator, a notification to a user, a notification to a portable device associated with a user, a notification to a node of the network, a notification to a cloud computing device, a notification to a plant computing device, and/or a provision of the alert as external data to an offset system. Example and non-limiting alert conditions include a component of the system operating in a fault condition, a process of the system operating in a fault condition, a commencement of the utilization of cache storage and/or intermediate storage for sensor values due to a network communication limit, a change in the sensor data transmission protocol (including changes of a selected type), and/or a change in the sensor data transmission protocol that may result in loss of data fidelity or resolution (e.g., compression of data, condensing of data, and/or summarizing data).

**[1532]** An example transmission feedback includes a feedback value such as: a change in transmission pricing, a change in storage pricing, a loss of connectivity, a reduction of bandwidth, a change in connectivity, a change in network availability, a change in network range, a change in wide area network (WAN) connectivity, and/or a change in wireless local area network (WLAN) connectivity.

**[1533]** An example system includes an assembly line industrial system having a number of vibrating components, such as motors, conveyors, fans, and/or compressors. The system includes a number of sensors that determine various parameters related to the vibrating components, including determination of diagnostic and/or process related information (proper operation, off-nominal operation, operating speed, imminent servicing or failure, etc.) of one or more of the components. Example sensors, without limitation, include noise, vibration, acceleration, temperature, and/or shaft speed sensors. The sensor information is conveyed to a target storage system, including at least partially through a network communicatively coupled to the assembly line industrial system. The example system includes a network management circuit that determines a sensor data transmission protocol to control flow of data from the sensors to the target storage system. The network management circuit, a related expert system, and/or a related machine learning algorithm, updates the sensor data transmission protocol to ensure efficient network utilization, sufficient delivery of data to support system control, diagnostics, and/or other determinations planned for the data outside of the system, to reduce resource utilization of data transmission, and/or to respond to system noise factors, variability, and/or changes in the system or related aspects such as cost or environment parameters. The example system includes improvement of system operations to ensure that diagnostics, controls, or other data dependent operations can be completed, to reduce costs while maintaining performance, and/or to increase system capability over time or process cycles.

**[1534]** An example system includes an automated robotic handling system, including a number of components such as actuators, gear boxes, and/or rail guides. The system includes a number of sensors that determine various parameters related to the components, including without limitation actuator position and/or feedback sensors, vibration, acceleration, temperature, imaging sensors, and/or spatial position sensors (e.g., within the handling system, a related plant, and/or GPS-type positioning). The sensor information is conveyed to a target storage system, including at least partially through a network communicatively coupled to the automated robotic handling system. The example system includes a network management circuit that determines a sensor data transmission protocol to control flow of data from the sensors to the target storage system. The network management circuit, a related expert system, and/or a related machine learning algorithm, updates the sensor data transmission protocol to ensure efficient network utilization, sufficient delivery of data to support system control, diagnostics, improvement and/or efficiency updates to handling efficiency, and/or other determinations planned for the data outside of the system, to reduce resource utilization of data transmission, and/or to respond to system noise factors, variability, and/or changes in the system or related aspects such as cost or environment parameters. The example system includes improvement of system operations to ensure that diagnostics, controls, or other data dependent operations can be completed, to reduce costs while maintaining performance, and/or to increase system capability over time or process cycles.

**[1535]** An example system includes a mining operation, including a surface and/or underground mining operation. The example mining operation includes components such as an underground inspection system, pumps, ventilation, generators and/or power generation, gas composition or quality systems, and/or process stream composition systems (e.g., including determination of desired material compositions, and/or composition of effluent streams for pollution and/or regulatory control). Various sensors are present in an example system to support control of the operation, determine status of the components, support safe operation, and/or to support regulatory compliance. The sensor information is conveyed to a target storage system, including at least partially through a network communicatively coupled to the mining operation. In certain embodiments, the network infrastructure of the mining operation exhibits high variability, due to, without limitation, significant environmental variability (e.g., pit or shaft condition variability) and/or intermittent availability—e.g., shutting off electronics during certain mining operations, difficulty in providing network access to portions of the mining operation, and/or the desirability to include mobile or intermittently available devices within the network infrastructure. The example system includes a network management circuit that determines a sensor data transmission protocol to control flow of data from the sensors to the target storage system. The network management circuit, a related expert system, and/or a related machine learning algorithm, updates the sensor data transmission protocol to ensure efficient network utilization, sufficient delivery of data to support system control, diagnostics, improvement and/or efficiency updates to handling efficiency, support for financial and/or regulatory compliance, and/or other determinations planned for the data outside of the system, to reduce resource utilization of data transmission, and/or to respond to system noise factors, variability, network infrastructure challenges, and/or changes in the system or related aspects such as cost or environment parameters.

**[1536]** An example system includes an aerospace system, such as a plane, helicopter, satellite, space vehicle or launcher, orbital platform, and/or missile. Aerospace systems have numerous systems supported by sensors, such as engine operations, control surface status and vibrations, environmental status (internal and external), and telemetry support. Additionally, aerospace systems have high variabil-

ity in both the number of sensors of varying types (e.g., a small number of fuel pressure sensors, but a large number of control surface sensors) as well as the sampling rates for relevant determinations of sensors of varying types (e.g., 1-second data may be sufficient for internal cabin pressure, but weather radar or engine speed sensors may require much higher time resolution). Computing power on an aerospace application is at a premium due to power consumption and weight considerations, and accordingly iterative, recursive, deep learning, expert system, and/or machine learning operations to improve any systems on the aerospace system, including sensor data taking and transmission of sensor information, are driven in many embodiments to computing devices outside of the aerospace vehicle of the system (e.g., through offline learning, post-processing, or the like). Storage capacity on an aerospace application is similarly at a premium, such that long-term storage of sensor data on the aerospace vehicle is not a cost-effective solution for many embodiments. Additionally, network communication from an aerospace vehicle may be subject to high variability and/or bandwidth limitations as the vehicle moves rapidly through the environment and/or into areas where direct communication with ground-based resources is not practical. Further, certain aerospace applications have significant competition for available network resources—for example in environments with a large number of passengers where passenger utilization of a network infrastructure consumes significant bandwidth. Accordingly, it can be seen that operations of a network management circuit, a related expert system, and/or a related machine learning algorithm, to update the sensor data transmission protocol can significantly enhance sensing operations in various aerospace systems. Additionally, certain aerospace applications have a high number of offset systems, enhancing the ability of an expert system or machine learning algorithm to improve sensor data capture and transmission operations, and/or to manage the high variability in sensed parameters (frequency, data rate, and/or data resolution) for the system across operating conditions.

**[1537]** An example system includes an oil or gas production system, such as a production platform (onshore or offshore), pumps, rigs, drilling equipment, blenders, and the like. Oil and gas production systems exhibit high variability in sensed variable types and sensing parameters, such as vibration (e.g., pumps, rotating shafts, fluid flow through pipes, etc.—which may be high frequency or low frequency), gas composition (e.g., of a wellhead area, personnel zone, near storage tanks, etc.—where low frequency may typically be acceptable, and/or it may be acceptable that no data is taken during certain times such as when personnel are not present), and/or pressure values (which may vary significantly both in required resolution and frequency or sampling rate depending upon operations currently occurring in the system). Additionally, oil and gas production systems have high variability in network infrastructure, both according to the system (e.g., an offshore platform versus a long-term ground-based production facility) and according to the operations being performed by the system (e.g., a wellhead in production may have limited network access, while a drilling or fracturing operation may have significant network infrastructure at a site during operations). Accordingly, it can be seen that operations of a network management circuit, a related expert system, and/or a related machine learning algorithm, to update the sensor data transmission protocol can significantly enhance sensing operations in various oil or gas production systems.

**[1538]** The present disclosure describes system for self-organized, network-sensitive data collection in an industrial environment, the system according to one disclosed non-limiting embodiment of the present disclosure can include an industrial system including a plurality of components, and a plurality of sensors each operatively coupled to at least one of the plurality of components, a sensor communication circuit structured to interpret a plurality of sensor data values from the plurality of sensors, a system collaboration circuit structured to communicate at least a portion of the plurality of sensor data values to a storage target computing device according to a sensor data transmission protocol, a transmission environment circuit structured to determine transmission conditions corresponding to the communication of the at least a portion of the plurality of sensor data values to the storage target computing device, a network management circuit structured to update the sensor data transmission protocol in response to the transmission conditions, and wherein the system collaboration circuit is further responsive to the updated sensor data transmission protocol.

**[1539]** A further embodiment of any of the foregoing embodiments of the present disclosure may include situations wherein the transmission conditions include environmental conditions relating to sensor communication of the plurality of sensor data values, and wherein the network management circuit is further structured to analyze the environmental conditions, and wherein updating the sensor data transmission protocol includes modifying the manner in which the plurality of sensor data values is transmitted from the plurality of sensors to the storage target computing device.

**[1540]** A further embodiment of any of the foregoing embodiments of the present disclosure may include situations wherein a data collector communicatively coupled to at least a portion of the plurality of sensors and responsive to the sensor data transmission protocol, wherein the system collaboration circuit is structured to receive the plurality of sensor data values from the at least a portion of the plurality of sensors, and wherein the transmission conditions correspond to at least one network parameter corresponding to the communication of the plurality of sensor data values from the at least a portion of the plurality of sensors.

**[1541]** A further embodiment of any of the foregoing embodiments of the present disclosure may include situations wherein the network management circuit is further structured to update the sensor data transmission protocol to modify the data collector to adjust a data collection rate for at least one of the plurality of sensors.

**[1542]** A further embodiment of any of the foregoing embodiments of the present disclosure may include situations wherein the network management circuit is further structured to update the sensor data transmission protocol to modify a multiplexing schedule of the data collector.

**[1543]** A further embodiment of any of the foregoing embodiments of the present disclosure may include situations wherein the network management circuit is further structured to update the sensor data transmission protocol to command an intermediate storage operation for at least a portion of the plurality of sensor data values.

**[1544]** A further embodiment of any of the foregoing embodiments of the present disclosure may include situations wherein the network management circuit is further

structured to update the sensor data transmission protocol to command further data collection for at least a portion of the plurality of sensors.

**[1545]** A further embodiment of any of the foregoing embodiments of the present disclosure may include situations wherein the network management circuit is further structured to update the sensor data transmission protocol to modify the data collector to implement a multiplexing schedule.

**[1546]** A further embodiment of any of the foregoing embodiments of the present disclosure may include situations wherein the network management circuit is further structured to update the sensor data transmission protocol to adjust a network transmission parameter for at least a portion of the plurality of sensor values.

**[1547]** A further embodiment of any of the foregoing embodiments of the present disclosure may include situations wherein the adjusted network transmission parameter includes at least one parameter selected from the parameters consisting of a timing parameter, a protocol selection, a file type selection, a streaming parameter selection, and a compression parameter.

**[1548]** A further embodiment of any of the foregoing embodiments of the present disclosure may include situations wherein the network management circuit is further structured to update the sensor data transmission protocol to change a frequency of data transmitted.

**[1549]** A further embodiment of any of the foregoing embodiments of the present disclosure may include situations wherein the network management circuit is further structured to update the sensor data transmission protocol to change a quantity of data transmitted.

**[1550]** A further embodiment of any of the foregoing embodiments of the present disclosure may include situations wherein the network management circuit is further structured to update the sensor data transmission protocol to change a destination of data transmitted.

**[1551]** A further embodiment of any of the foregoing embodiments of the present disclosure may include situations wherein the network management circuit is further structured to update the sensor data transmission protocol to change a network protocol used to transmit the data.

**[1552]** A further embodiment of any of the foregoing embodiments of the present disclosure may include situations wherein the network management circuit is further structured to update the sensor data transmission protocol to add a redundant network path to transmit the data.

**[1553]** A further embodiment of any of the foregoing embodiments of the present disclosure may include situations wherein the network management circuit is further structured to update the sensor data transmission protocol to bond an additional network path to transmit the data.

**[1554]** A further embodiment of any of the foregoing embodiments of the present disclosure may include situations wherein the network management circuit is further structured to update the sensor data transmission protocol to re-arrange a hierarchical network to transmit the data.

**[1555]** A further embodiment of any of the foregoing embodiments of the present disclosure may include situations wherein the network management circuit is further structured to update the sensor data transmission protocol to rebalance a hierarchical network to transmit the data.

**[1556]** A further embodiment of any of the foregoing embodiments of the present disclosure may include situations wherein the network management circuit is further structured to update the sensor data transmission protocol to reconfigure a mesh network to transmit the data.

**[1557]** A further embodiment of any of the foregoing embodiments of the present disclosure may include situations wherein the network management circuit is further structured to update the sensor data transmission protocol to delay a data transmission time.

**[1558]** A further embodiment of any of the foregoing embodiments of the present disclosure may include situations wherein the network management circuit is further structured to update the sensor data transmission protocol to delay the data transmission time to a lower cost transmission time.

**[1559]** A further embodiment of any of the foregoing embodiments of the present disclosure may include situations wherein the network management circuit is further structured to update the sensor data transmission protocol to reduce the amount of information sent at one time over the network.

**[1560]** A further embodiment of any of the foregoing embodiments of the present disclosure may include situations wherein the network management circuit is further structured to update the sensor data transmission protocol to adjust a frequency of data sent from a second data collector.

**[1561]** A further embodiment of any of the foregoing embodiments of the present disclosure may include situations wherein the network management circuit is further structured to adjust an external data access frequency, and wherein the system collaboration circuit is responsive to the adjusted external data access frequency.

**[1562]** A further embodiment of any of the foregoing embodiments of the present disclosure may include situations wherein the network management circuit is further structured to adjust an external data access timing value, and wherein the system collaboration circuit is responsive to the adjusted external data access timing value.

**[1563]** A further embodiment of any of the foregoing embodiments of the present disclosure may include situations wherein the network management circuit is further structured to adjust a network utilization value.

**[1564]** A further embodiment of any of the foregoing embodiments of the present disclosure may include situations wherein the network management circuit is further structured to adjust the network utilization value to utilize bandwidth at a lower cost bandwidth time.

**[1565]** A further embodiment of any of the foregoing embodiments of the present disclosure may include situations wherein the network management circuit is further structured to enable utilizing a high-speed network.

**[1566]** A further embodiment of any of the foregoing embodiments of the present disclosure may include situations wherein the network management circuit is further structured to request a higher cost bandwidth access, and to update the sensor transmission protocol in response to the higher cost bandwidth access.

**[1567]** A further embodiment of any of the foregoing embodiments of the present disclosure may include situations wherein the network management circuit further includes an expert system, and wherein the updating the sensor data transmission protocol is further in response to operations of the expert system.

**[1568]** A further embodiment of any of the foregoing embodiments of the present disclosure may include situa-

tions wherein the network management circuit further includes a machine learning algorithm, and wherein the updating the sensor data transmission protocol is further in response to operations of the machine learning algorithm.

**[1569]** A further embodiment of any of the foregoing embodiments of the present disclosure may include situations wherein the machine learning algorithm is further structured to utilize feedback data including the transmission conditions.

**[1570]** A further embodiment of any of the foregoing embodiments of the present disclosure may include situations wherein the feedback data further includes at least a portion of the plurality of sensor values.

**[1571]** A further embodiment of any of the foregoing embodiments of the present disclosure may include situations wherein the feedback data further includes benchmarking data.

**[1572]** A further embodiment of any of the foregoing embodiments of the present disclosure may include situations wherein the benchmarking data further includes data selected from the list consisting of: a network efficiency, a data efficiency, a comparison with offset data collectors, a throughput efficiency, a data efficacy, a data quality, a data precision, a data accuracy, and a data frequency.

**[1573]** A further embodiment of any of the foregoing embodiments of the present disclosure may include situations wherein the benchmarking data further includes data selected from the list consisting of: an environmental response, a mesh networking coherence, a data coverage, a target coverage, a signal diversity, a critical response, and a motion efficiency.

**[1574]** A further embodiment of any of the foregoing embodiments of the present disclosure may include situations wherein the transmission conditions corresponding to the communication comprise at least one condition selected from the conditions consisting of a mesh network needs to rearrange to balance throughput, a parent node in a hierarchically arranged network has had a change in connectivity, a network super-node in a hybrid peer-to-peer application-layer network has been replaced, and a node in a mesh or hierarchical network has been detected as malicious.

**[1575]** A further embodiment of any of the foregoing embodiments of the present disclosure may include situations wherein the transmission conditions corresponding to the communication comprise at least one condition selected from the conditions consisting of a mesh network peer forwarding packets has lost connectivity, a mesh network peer forwarding packets has gained additional bandwidth, a mesh network peer forwarding packets has had a reduction in bandwidth, and a mesh network peer forwarding packets has regained connectivity.

**[1576]** A further embodiment of any of the foregoing embodiments of the present disclosure may include situations wherein the transmission conditions corresponding to the communication comprise at least one condition selected from the conditions consisting of a cost of transmitting information has changed dynamically, a change has been made in a hierarchical network arrangement to balance bandwidth use in a network tree, a portion of the network relaying sampling data has had a change in permissions, authorization level, or credentials, a current cost of delivering information over a network hop has changed, a higher-bandwidth network connection type has become available, a lower-cost network connection type has become available, and a change has been made in a network topology.

**[1577]** A further embodiment of any of the foregoing embodiments of the present disclosure may include situations wherein the transmission conditions corresponding to the communication include at least one condition selected from the conditions consisting of a data collection client has changed a data frequency requirement for at least one of the plurality of sensor values, a data collection client has changed a data type requirement for at least one of the plurality of sensor values, a data collection client has changed a sensor target for data collection, and a data collection client has changed the storage target computing device.

**[1578]** The present disclosure describes system for self-organized, network-sensitive data collection in an industrial environment, the system according to one disclosed non-limiting embodiment of the present disclosure can include an industrial system including a plurality of components, and a plurality of sensors each operatively coupled to at least one of the plurality of components, a sensor communication circuit structured to interpret a plurality of sensor data values from the plurality of sensors, a system collaboration circuit structured to communicate at least a portion of the plurality of sensor data values over a network having a plurality of nodes to a storage target computing device according to a sensor data transmission protocol, a transmission environment circuit structured to determine transmission feedback corresponding to the communication of the at least a portion of the plurality of sensor data values over the network, and a network management circuit structured to update the sensor data transmission protocol in response to the transmission feedback, wherein the system collaboration circuit is further responsive to the updated sensor data transmission protocol.

**[1579]** A further embodiment of any of the foregoing embodiments of the present disclosure may include situations wherein the system collaboration circuit is further structured to send an alert to at least one of the plurality of nodes in response to the updated sensor data transmission protocol.

**[1580]** A further embodiment of any of the foregoing embodiments of the present disclosure may include situations wherein updating the sensor data transmission includes at least one operation selected from the operations consisting of providing instructions to rearrange a mesh network including the plurality of nodes, providing instructions to rearrange a hierarchical data network including the plurality of nodes, rearranging a peer-to-peer data network including the plurality of nodes and rearranging a hybrid peer-to-peer data network including the plurality of nodes.

**[1581]** A further embodiment of any of the foregoing embodiments of the present disclosure may include situations wherein updating the sensor data transmission includes at least one operation selected from the operations consisting of providing instructions to reduce a quantity of data sent over the network, providing instructions to adjust a frequency of data capture sent over the network, providing instructions to time-shift delivery of at least a portion of the plurality of sensor values sent over the network, and providing instructions to change a network protocol corresponding to the network.

**[1582]** A further embodiment of any of the foregoing embodiments of the present disclosure may include situa-

tions wherein updating the sensor data transmission includes at least one operation selected from the operations consisting of providing instructions to reduce a throughput of at least one device coupled to the network, providing instructions to reduce a bandwidth use of the network, providing instructions to compress data corresponding to at least a portion of the plurality of sensor values sent over the network, providing instructions to condense data corresponding to at least a portion of the plurality of sensor values sent over the network, providing instructions to summarize data corresponding to at least a portion of the plurality of sensor values sent over the network, and providing instructions to encrypt data corresponding to at least a portion of the plurality of sensor values sent over the network.

**[1583]** A further embodiment of any of the foregoing embodiments of the present disclosure may include situations wherein updating the sensor data transmission includes at least one operation selected from the operations consisting of providing instructions to deliver data corresponding to at least a portion of the plurality of sensor values to a distributed ledger, providing instructions to deliver data corresponding to at least a portion of the plurality of sensor values to a central server, providing instructions to deliver data corresponding to at least a portion of the plurality of sensor values to a super-node and providing instructions to deliver data corresponding to at least a portion of the plurality of sensor values redundantly across a plurality of network connections.

**[1584]** A further embodiment of any of the foregoing embodiments of the present disclosure may include situations wherein updating the sensor data transmission includes providing instructions to deliver data corresponding to at least a portion of the plurality of sensor values to one of the plurality of components.

**[1585]** A further embodiment of any of the foregoing embodiments of the present disclosure may include situations wherein the one of the plurality of components is communicatively coupled to the sensor providing the data corresponding to at least a portion of the plurality of sensor values.

**[1586]** A further embodiment of any of the foregoing embodiments of the present disclosure may include situations wherein the system collaboration circuit is further structured to interpret a quality of service commitment, and wherein the network management circuit is further structured to update the sensor data transmission protocol further in response to the quality of service commitment.

**[1587]** A further embodiment of any of the foregoing embodiments of the present disclosure may include situations wherein the system collaboration circuit is further structured to interpret a service level agreement, and wherein the network management circuit is further structured to update the sensor data transmission protocol further in response to the service level agreement.

**[1588]** A further embodiment of any of the foregoing embodiments of the present disclosure may include situations wherein the network management circuit is further structured to update the sensor data transmission protocol to provide instructions to increase a quality of service value.

**[1589]** A further embodiment of any of the foregoing embodiments of the present disclosure may include situations wherein the network includes a mesh network, and wherein the network management circuit is further structured to update the sensor data transmission protocol to provide instructions to eject one of the plurality of nodes from the mesh network.

**[1590]** A further embodiment of any of the foregoing embodiments of the present disclosure may include situations wherein the network includes a peer-to-peer network, and wherein the network management circuit is further structured to update the sensor data transmission protocol to provide instructions to eject one of the plurality of nodes from the peer-to-peer network.

**[1591]** A further embodiment of any of the foregoing embodiments of the present disclosure may include situations wherein the network management circuit is further structured to update the sensor data transmission protocol to cache at least a portion of the plurality of sensor values.

**[1592]** A further embodiment of any of the foregoing embodiments of the present disclosure may include situations wherein the network management circuit is further structured to update the sensor data transmission protocol to communicate the cached at least a portion of the plurality of sensor values in response to at least one of a determination that the cached data is requested, a determination that the network feedback indicates communication of the cached data is available, and a determination that higher priority data is present that requires utilization of cache resources holding the cached data.

**[1593]** A further embodiment of any of the foregoing embodiments of the present disclosure may include situations wherein the system further includes a data collector configured to receive the at least a portion of the plurality of sensor data values, wherein the at least a portion of the plurality of sensor data values includes data provided by a plurality of the sensors, and wherein the transmission feedback includes network performance information corresponding to the data collector.

**[1594]** A further embodiment of any of the foregoing embodiments of the present disclosure may include situations wherein the system further includes a data collector configured to receive the at least a portion of the plurality of sensor data values, wherein the at least a portion of the plurality of sensor data values includes data provided by a plurality of the sensors, a second data collector communicatively coupled to the network, and wherein the transmission feedback includes network performance information corresponding to the second data collector.

**[1595]** The present disclosure describes system for self-organized, network-sensitive data collection in an industrial environment, the system according to one disclosed non-limiting embodiment of the present disclosure can include an industrial system including a plurality of components, and a plurality of sensors each operatively coupled to at least one of the plurality of components, a sensor communication circuit structured to interpret a plurality of sensor data values from the plurality of sensors at a predetermined frequency, a system collaboration circuit structured to communicate at least a portion of the plurality of sensor data values over a network having a plurality of nodes to a storage target computing device according to a sensor data transmission protocol, the sensor data transmission protocol including a predetermined hierarchy of data collection and the predetermined frequency, a transmission environment circuit structured to determine transmission feedback corresponding to the communication of the at least a portion of the plurality of sensor data values over the network, and a

network management circuit structured to update the sensor data transmission protocol in response to the transmission feedback and further in response to benchmarking data, wherein the system collaboration circuit is further responsive to the updated sensor data transmission protocol.

**[1596]** A further embodiment of any of the foregoing embodiments of the present disclosure may include situations wherein updating the sensor data transmission includes at least one operation selected from the operations consisting of providing an instruction to change the sensors of the plurality of sensors, providing an instruction to adjust the predetermined frequency, providing an instruction to adjust a quantity of the plurality of sensor data values that are stored, providing an instruction to adjust a data transmission rate of the communication of the at least a portion of the plurality of sensor data values, providing an instruction to adjust a data transmission time of the communication of the at least a portion of the plurality of sensor data values, and providing an instruction to adjust a networking method of the communication over the network.

**[1597]** A further embodiment of any of the foregoing embodiments of the present disclosure may include situations wherein the benchmarking data further includes data selected from the list consisting of a network efficiency, a data efficiency, a comparison with offset data collectors, a throughput efficiency, a data efficacy, a data quality, a data precision, a data accuracy, and a data frequency.

**[1598]** A further embodiment of any of the foregoing embodiments of the present disclosure may include situations wherein the benchmarking data further includes data selected from the list consisting of an environmental response, a mesh networking coherence, a data coverage, a target coverage, a signal diversity, a critical response, and a motion A further embodiment of any of the foregoing embodiments of the present disclosure may include situations wherein the benchmarking data further includes data selected from the list consisting of a quality of service commitment, a quality of service guarantee, a service level agreement, and a predetermined quality of service value.

**[1599]** A further embodiment of any of the foregoing embodiments of the present disclosure may include situations wherein the benchmarking data further includes data selected from the list consisting of a network interference value, a network obstruction value, and an area of impeded network connectivity.

**[1600]** A further embodiment of any of the foregoing embodiments of the present disclosure may include situations wherein the transmission feedback includes a communication interference value selected from the values consisting of an interference caused by a component of the system, an interference caused by one of the sensors, an interference caused by a metallic object, an interference caused by a physical obstruction, an attenuated signal caused by a low power condition, and an attenuated signal caused by a network traffic demand in a portion of the network.

**[1601]** The present disclosure describes a system for self-organized, network-sensitive data collection in an industrial environment, the system according to one disclosed non-limiting embodiment of the present disclosure can include an industrial system including a plurality of components, and a plurality of sensors each operatively coupled to at least one of the plurality of components, a sensor communication circuit structured to interpret a plurality of sensor data values from the plurality of sensors at a predetermined frequency, a system collaboration circuit structured to communicate at least a portion of the plurality of sensor data values over a network having a plurality of nodes to a storage target computing device according to a sensor data transmission protocol, a transmission environment circuit structured to determine transmission feedback corresponding to the communication of the at least a portion of the plurality of sensor data values over the network, a network management circuit structured to update the sensor data transmission protocol in response to the transmission feedback and a network notification circuit structured to provide an alert value in response to the updated sensor data transmission protocol, wherein the system collaboration circuit is further responsive to the updated sensor data transmission protocol.

**[1602]** A further embodiment of any of the foregoing embodiments of the present disclosure may include situations wherein the transmission feedback includes at least one feedback value selected from the values consisting of: a change in transmission pricing, a change in storage pricing, a loss of connectivity, a reduction of bandwidth, a change in connectivity, a change in network availability, a change in network range, a change in wide area network (WAN) connectivity, and a change in wireless local area network (WLAN) connectivity.

**[1603]** A further embodiment of any of the foregoing embodiments of the present disclosure may include situations wherein the network management circuit further includes an expert system, and wherein the updating the sensor data transmission protocol is further in response to operations of the expert system.

**[1604]** A further embodiment of any of the foregoing embodiments of the present disclosure may include situations wherein the expert system includes at least one system selected from the systems consisting of: a rule-based system, a model-based system, a neural-net system, a Bayesian-based system, a fuzzy logic-based system, and a machine learning system.

**[1605]** A further embodiment of any of the foregoing embodiments of the present disclosure may include situations wherein the network management circuit further includes a machine learning algorithm, and wherein the updating the sensor data transmission protocol is further in response to operations of the machine learning algorithm.

**[1606]** A further embodiment of any of the foregoing embodiments of the present disclosure may include situations wherein the machine learning algorithm is further structured to utilize feedback data including the transmission conditions.

**[1607]** A further embodiment of any of the foregoing embodiments of the present disclosure may include situations wherein the feedback data further includes at least a portion of the plurality of sensor values.

**[1608]** A further embodiment of any of the foregoing embodiments of the present disclosure may include situations wherein the feedback data further includes benchmarking data.

**[1609]** A further embodiment of any of the foregoing embodiments of the present disclosure may include situations wherein the benchmarking data further includes data selected from the list consisting of: a network efficiency, a data efficiency, a comparison with offset data collectors, a throughput efficiency, a data efficacy, a data quality, a data precision, a data accuracy, and a data frequency.

**[1610]** A further embodiment of any of the foregoing embodiments of the present disclosure may include situations wherein the benchmarking data further includes data selected from the list consisting of: an environmental response, a mesh networking coherence, a data coverage, a target coverage, a signal diversity, a critical response, and a motion efficiency.

**[1611]** Referencing FIG. **174**, an example system **12500** for data collection in an industrial environment includes an industrial system **12502** having a number of components **12504**, and a number of sensors **12506**, wherein each of the sensors **12506** is operatively coupled to at least one of the components **12504**. The selection, distribution, type, and communicative setup of sensors depends upon the application of the system **12500** and/or the context.

**[1612]** The example system **12500** further includes a sensor communication circuit **12522** (reference FIG. **185**) that interprets a number of sensor data values **12542**. An example system includes the sensor data values **12542** being a number of values to support a sensor fusion operation, for example a set of sensors believed to encompass detection of operating conditions of the system that affect a desired output, to control a process or portion of the industrial system **12502**, to diagnose or predict an aspect of the industrial system **12502** or a process associated with the industrial system industrial system **12502**.

**[1613]** In certain embodiments, sensor data values **12542** are provided to a data collector **12508**, which may be in communication with multiple sensors **12506** and/or with a controller **12512**. In certain embodiments, a plant computer **12510** is additionally or alternatively present. In the example system, the controller **12512** is structured to functionally execute operations of the sensor communication circuit **12522**, sensor data storage profile circuit **12524**, sensor data storage implementation circuit **12526**, storage planning circuit **12528**, and/or haptic feedback circuit **12530**. The controller **12512** is depicted as a separate device for clarity of description. Aspects of the controller **12512** may be present on the sensors **12506**, the data controller **12508**, the plant computer **12510**, and/or on a cloud computing device **12514**. In certain embodiments described throughout this disclosure, all aspects of the controller **12512** or other controllers may be present in another device depicted on the system **12500**. The plant computer **12510** represents local computing resources, for example processing, memory, and/or network resources, that may be present and/or in communication with the industrial system **12500**. In certain embodiments, the cloud computing device **12514** represents computing resources externally available to the industrial system **12502**, for example over a private network, intra-net, through cellular communications, satellite communications, and/or over the internet. In certain embodiments, the data controller **12508** may be a computing device, a smart sensor, a MUX box, or other data collection device capable to receive data from multiple sensors and to pass-through the data and/or store data for later transmission. An example data controller **12508** has no storage and/or limited storage, and selectively passes sensor data therethrough, with a subset of the sensor data being communicated at a given time due to bandwidth considerations of the data controller **12508**, a related network, and/or imposed by environmental constraints. In certain embodiments, one or more sensors and/or computing devices in the system **12500** are portable devices—for example a plant operator walking through the industrial system may have a smart phone, which the system **12500** may selectively utilize as a data controller **12508**, sensor **12506**—for example to enhance communication throughput, sensor resolution, and/or as a primary method for communicating sensor data values **12542** to the controller **12512**. The system **12500** depicts the controller **12512**, the sensors **12506**, the data controller **12508**, the plant computer **12510**, and/or the cloud computing device **12514** having a memory storage for storing sensor data thereon, any one or more of which may not have a memory storage for storing sensor data thereon. In certain embodiments, the sensor data storage profile circuit **12524** prepares a data storage profile **12532** that directs sensor data to memory storage, including moving sensor data in a controlled manner from one memory storage to another. Sensor data stored on various devices consumes memory on the device, transferring the stored data between device consumes network and/or communication bandwidth in the system **12500**, and/or operations on sensor data such as processing, compression, statistical analysis, summarization, and/or provision of alerts consumes processor cycles as well as memory to support operations such as buffer files, intermediate data, and the like. Accordingly, improved or optimal configuration and/or updating of the data storage profile **12532** provides for lower utilization of system resources and/or allows for the storage of sensor data with higher resolution, over longer time frames, and/or from a larger number of sensors.

**[1614]** Referencing FIG. **175**, an example apparatus **12520** for self-organizing data storage for a data collector for an industrial system is depicted. An example apparatus **12520** includes a controller, such as controller **12512**. The example controller includes a sensor communication circuit **12522** that interprets a number of sensor data values **12542**, and a sensor data storage profile circuit **12524** that determines a data storage profile **12532**. The data storage profile **12532** includes a data storage plan for the number of sensor data values **12542**. The data storage plan includes how much of the sensor data values **12542** is stored initially (e.g., as the data is sampled, and/or after initial transmission to a data controller **12508**, plant computer **12510**, controller **12512**, and/or cloud-computing device **12514**). The example data storage profile **12532** includes a plan for the transmission of data, which may be according to a time, a process stage, operating conditions of the system **12500** and/or a network related to the system, as well as the communication conditions of devices within the system **12500**.

**[1615]** For example, data from a temperature sensor may be planned to be stored locally on a sensor having storage capacity, and transmitted in bursts to a data controller. The data controller may be instructed to transmit the sensor data to the cloud computing device on a schedule, for example as the data controller memory reaches a threshold, as network communication capacity is available, at the conclusion of a process, and/or upon request. Additionally or alternatively, data from the sensors may be changed on a device or upon transfer of the data (e.g., just before transfer, just after transfer, or on a schedule). For example, the data storage profile **12532** may describe storing high resolution, high precision, and/or high-sampling rate data, and reducing the storage of the data set after a period of time, a selected event, and/or confirmation of a successful process or that the high resolution data is no longer needed. Accordingly, higher resolution data and/or data from a large number of sensors may be available for utilization, such as by a sensor fusion

operation or the like, while the long-term memory utilization is also managed. Each of the sensor data sets may be treated individually for memory storage characteristics, and/or sensors may be grouped for similar treatment (e.g., sensors having similar data characteristics and/or impact on the system, sensors cooperating in a sensor fusion operation, a group of sensors utilized for a model or a virtual sensor, etc.). In certain embodiments, sensor data from a single sensor may be treated distinctly according to an update of the data storage profile **12532**, a time or process stage at which the data is taken, and/or a system condition such as a network issue, a fault condition, or the like. Additionally or alternatively, a single set of sensor data may be stored in multiple places in the system, for example where the same data is utilized in several separate sensor fusion operations, and the resource consumption from storing multiple sets of the same data is lower than a processor or network utilization to utilize a single stored data set in several separate processes.

**[1616]** Referencing FIG. **179**, various aspects of an example data storage profile **12532** are depicted. The example data storage profile **12532** includes aspects of the data storage profile **12532** that may be included as additional or alternative aspects of the data storage profile **12532** relative to the storage location definition **12534**, the storage time definition, and/or the storage time definition **12536**, data resolution description **12540**, and/or may be included as aspects of these. Any one or more of the factors or parameters relating to storage depicted in FIG. **179** may be included in a data storage profile **12532** and/or managed by a self-organizing storage system (e.g., system **12500** and/or controller **12532**). The self-organizing storage system may manage or optimize any such parameters or factors noted throughout this disclosure, individually or in combination, using an expert system, which may involve a rule-based optimization, optimization based on a model of performance, and/or optimization using machine learning/artificial intelligence, optionally including deep learning approaches, or a hybrid or combination of the above. In embodiments, an example data storage profile **12532** includes a storage type plan **12576** or profile that accounts for or specifies a type of storage, such as based on the underlying physical media type of the storage, the type of device or system on which storage resides, the mechanism by which storage can be accessed for reading or writing data, or the like. For example, a storage media plan **12578** may specify or account for use of tape media, hard disk drive media, flash memory media, non-volatile memory, optical media, one-time programmable memory, or the like. The storage media plan may account for or specify parameters relating to the media, including capabilities such as storage duration, power usage, reliability, redundancy, thermal performance factors, robustness to environmental conditions (such as radiation or extreme temperatures), input/output speeds and capabilities, writing speeds, reading speeds, and the like, or other media specific parameters such as data file organization, operating system, read-write life cycle, data error rates, and/or data compression aspects related to or inherent to the media or media controller. A storage access plan **12580** or profile may specify or account for the nature of the interface to available storage, such as database storage (including relational, object-oriented, and other databases, as well as distributed databases, virtual machines, cloud-based databases, and the like), cloud storage (such as S3™ buckets and other simple storage formats), stream-based storage, cache storage, edge storage (e.g., in edge-based network nodes), on-device storage, server-based storage, network-attached storage or the like. The storage access plan or profile may specify or account for factors such as the cost of different storage types, input/output performance, reliability, complexity, size, and other factors. A storage protocol plan **12582** or profile may specify or account for a protocol by which data will be transmitted or written, such as a streaming protocol, an IP-based protocol, a non-volatile memory express protocol, a SATA protocol or other network-attached storage protocol, a disk-attached storage protocol, an Ethernet protocol, a peered storage protocol, a distributed ledger protocol, a packet-based storage protocol, a batch-based storage protocol, a metadata storage protocol, a compressed storage protocol (using various compression types, such as for packet-based media, streaming media, lossy or lossless compression types, and the like), or others. The storage protocol plan may account for or specify factors relating to the storage protocol, such as input/output performance, compatibility with available network resources, cost, complexity, data processing required to implement the protocol, network utilization to support the protocol, robustness of the protocol to support system noise (e.g., EM, competing network traffic, interruption frequency of network availability), memory utilization to implement the protocol (such as: as-stored memory utilization, and/or intermediate memory utilization in creating or transferring the data), and the like. A storage writing protocol **12584** plan or profile may specify or account for how data will be written to storage, such as in file form, in streaming form, in batch form, in discrete chunks, to partitions, in stripes or bands across different storage locations, in streams, in packets or the like. The storage writing protocol may account for or specify parameters and factors relating to writing, such as input speed, reliability, redundancy, security, and the like. A storage security plan **12586** or profile may account for or specify how storage will be secured, such as availability or type of password protection, authentication, permissioning, rights management, encryption (of the data, of the storage media, and/or of network traffic on the system), physical isolation, network isolation, geographic placement, and the like. A storage location plan **12588** or profile may account for or specify a location for storage, such as a geolocation, a network location (e.g., at the edge, on a given server, or within a given cloud platform or platforms), or a location on a device, such as a location on a data collector, a location on a handheld device (such as a smart phone, tablet, or personal computer of an operator within an environment), a location within or across a group of devices (such as a mesh, a peer-to-peer group, a ring, a hub-and-spoke group, a set of parallel devices, a swarm of devices (such as a swarm of collectors), or the like), a location in an industrial environment (such as or within an storage element of an instrumentation system of or for a machine, a location on an information technology system for the environment, or the like), or a dedicated storage system, such as a disk, dongle, USB device, or the like. A storage backup plan **12590** or profile may account for or specify a plan for backup or redundancy of stored data, such as indicating redundant locations and managing any or all of the above factors for a backup storage location. In certain embodiments, the storage security plan **12586** and/or storage backup plan **12590** may specify parameters such as data retention, long-term storage plans

(e.g., migrate the stored data to a different storage media after a period of time and/or after certain operations in the system are performed on the data), physical risk management of the data and/or storage media (e.g., provision of the data in multiple geographic regions having distinct physical risk parameters, movement of the data when a storage location experiences a physical risk, refreshing the data according to a predicted life cycle of a long-term storage media, etc.).

**[1617]** The example controller **12512** further includes a sensor data storage implementation circuit **12526** that stores at least a portion of the number of sensor data values in response to the data storage profile **12532**. An example controller **12512** includes the data storage profile **12532** having a storage location definition **12534** corresponding to at least one of the number of sensor data values **12542**, including at least one location such as: a sensor storage location (e.g., data stored for a period of time on the sensor, and/or on a portable device for a user **12518** in proximity to the industrial system **12502** where the portable device is adapted by the system as a sensor), a sensor communication device storage location (e.g., a data controller **12508**, MUX device, smart sensor in communication with other sensors, and/or on a portable device for a user **12518** in proximity to the industrial system **12502** or a network of the industrial system **12502** where the portable device is adapted by the system as a communication device to transfer sensor data between components in the system, etc.), a regional network storage location (e.g., on a plant computer **12510** and/or controller **12512**), and/or a global network storage location (e.g., on a cloud computing device **12514**).

**[1618]** An example controller **12512** includes the data storage profile **12532** including a storage time definition **12536** corresponding to at least one of the number of sensor data values **12542**, including at least one time value such as: a time domain description over which the corresponding at least one of the number of sensor data values is to be stored (e.g., times and locations for the data, which may include relative time to some aspect such as the time of data sampling, a process stage start or stop time, etc., or an absolute time such as midnight, Saturday, the first of the month, etc.); a time domain storage trajectory including a number of time values corresponding to a number of storage locations over which the corresponding at least one of the number of sensor data values is to be stored (e.g., the flow of the sensor data through the system across a number of devices, with the time for each storage transfer including a relative or absolute time description); a process description value over which the corresponding at least one of the number of sensor data values is to be stored (e.g., including a process description and the planned storage location for data values during the described process portion; the process description can include stages of a process, and identification of which process is related to the storage plan, and the like); and/or a process description trajectory including a number of process stages corresponding to a number of storage locations over which the corresponding at least one of the number of sensor data values is to be stored (e.g., the flow of the sensor data through the system across a number of devices, with process stage and/or process identification for each storage transfer).

**[1619]** An example controller **12512** includes the data storage profile **12532** including a data resolution description **12540** corresponding to at least one of the number of sensor data values **12544**, where the data resolution description **12540** includes a value such as: a detection density value corresponding to the at least one of the number of sensor data values (e.g., detection density may be time sampling resolution, spatial sampling resolution, precision of the sampled data, and/or a processing operation to be applied that may affect the available resolution, such as filtering and/or lossy compression of the data); a detection density value corresponding to a more than one of the number of the sensor data values (e.g., a group of sensors having similar detection density values, a secondary data value determined from a group of sensors having a specified detection density value, etc.); a detection density trajectory including a number of detection density values of the at least one of the number of sensor data values, each of the number of detection density values corresponding to a time value (e.g., any of the detection density concepts combined with any of the time domain concepts); a detection density trajectory including a number of detection density values of the at least one of the number of sensor data values, each of the number of detection density values corresponding to a process stage value (e.g., any of the detection density concepts combined with any of the process description or stage concepts); and/or a detection density trajectory comprising a number of detection density values of the at least one of the number of sensor data values, each of the number of detection density values corresponding to a storage location value (e.g., detection density can be varied according to the device storing the data).

**[1620]** An example sensor data storage profile circuit **12524** further updates the data storage profile **12532** after the operations of the sensor data storage implementation circuit **12526**, where the sensor data storage implementation circuit **12526** further stores the portion of the number of sensor data values **12544** in response to the updated data storage profile **12532**. For example, during operations of a system at a first point in time, the sensor data storage implementation circuit **12526** utilizes a currently existing data storage profile sensor data storage implementation circuit **12526**, which may be based on initial estimates of the system performance, desired data from an operator of the system, and/or from a previous operation of the sensor data storage profile circuit **12524**. During operations of the system, the sensor data storage implementation circuit **12526** stores data according to the data storage profile **12532**, and the sensor data storage profile circuit **12524** determines parameters for the data storage profile **12532** which may result in improved performance of the system. An example sensor data storage profile circuit **12524** tests various parameters for the data storage profile **12532**, for example utilizing a machine learning optimization routine, and upon determining that an improved data storage profile **12532** is available, the sensor data storage profile circuit **12524** provides the updated data storage profile **12532** which is utilized by the sensor data storage implementation circuit **12526**. In certain embodiments, the sensor data storage profile circuit **12524** may perform various operations such as supplying an intermediate data storage profile **12532** which is utilized by the sensor data storage implementation circuit **12526** to produce real-world results, applies modeling to the system (either first principles modeling based on system characteristics, a model utilizing actual operating data for the system, a model utilizing actual operating data for an offset system, and/or combinations of these) to

determine what an outcome of a given data storage profile **12532** will be or would have been (including, for example, taking extra sensor data beyond what is utilized to support a process operated by the system), and/or applying randomized changes to the data storage profile **12532** to ensure that an optimization routine does not settle into a local optimum or non-optimal condition.

**[1621]** An example sensor data storage profile circuit **12524** further updates the data storage profile **12532** in response to external data **12544** and/or cloud-based data **12538**, including data such as: an enhanced data request value (e.g., an operator, model, optimization routine, and/or other process requests enhanced data resolution for one or more parameters); a process success value (e.g., indicating that current storage practice provides for sufficient data availability and/or system performance; and/or that current storage practice may be over-capable, and one or more changes to reduce system utilization may be available); a process failure value (e.g., indicating that current storage practices may not provide for sufficient data availability and/or system performance, which may include additional operations or alerts to an operator to determine whether the data transmission and/or availability contributed to the process failure); a component service value (e.g., an operation to adjust the data storage to ensure higher resolution data is available to improve a learning algorithm predicting future service events, and/or to determine which factors may have contributed to premature service); a component maintenance value (e.g., an operation to adjust the data storage to ensure higher resolution data is available to improve a learning algorithm predicting future maintenance events, and/or to determine which factors may have contributed to premature maintenance); a network description value (e.g., a change in the network, for example by identification of devices, determination of protocols, and/or as entered by a user or operator, where the network change results in a capability change and potentially a distinct optimal storage plan for sensor data); a process feedback value (e.g., one or more process conditions detected); a network feedback value (e.g., one or more network changes as determined by actual operations of the network—e.g., a loss or reduction in communication of one or more devices, a network communication volume change, a transmission noise value change on the network, etc.); a sensor feedback value (e.g., metadata such as a sensor fault, capability change; and/or based on the detected data from the system, for example an anomalous reading, rate of change, or off-nominal condition indicating that enhanced or reduced resolution, sampling time, etc. should change the storage plan); and/or a second data storage profile, where the second data storage profile was generated for an offset system.

**[1622]** An example storage planning circuit **12528** determines a data configuration plan **12546** and updates the data storage profile **12532** in response to the data configuration plan **12546**, where the sensor data storage implementation circuit **12526** further stores at least a portion of the number of sensor data values in response to the updated data storage profile **12532**. An example data configuration plan **12546** includes a value such as: a data storage structure value (e.g., a data type, such as integer, string, a comma delimited file, how many bits are committed to the values, etc.); a data compression value (e.g., whether to compress data, a compression model to use, and/or whether segments of data can be replaced with summary information, polynomial or other curve fit summarizations, etc.); a data write strategy value (e.g., whether to store values in a distributed manner or on a single device, which network communication and/or operating system protocols to utilize); a data hierarchy value (e.g., which data is favored over other data where storage constraints and/or communication constraints will limit the stored data—the limits may be temporal, such as data will not be in the intended location at the intended time, or permanent, such as some data will need to be compressed in a lossy manner, and/or lost); an enhanced access value determined for the data (e.g., the data is of a type for reports, searching, modeling access, and/or otherwise tagged, where enhanced access includes where the data is stored for scope of availability, indexing of data, summarization of data, topical reports of data, which may be stored in addition to the raw or processed sensor data); and/or an instruction value corresponding to the data (e.g., a placeholder indicating where data can be located, an interface to access the data, metadata indicating units, precision, time frames, processes in operation, faults present, outcomes, etc.).

**[1623]** It can be seen that the provision of control over data flow and storage through the system allows for improvement generally, and movement toward optimization over time, of data management throughout the system. Accordingly, more data of a higher resolution can be accumulated, and in a more readily accessible manner, than previously known systems with fixed or manually configurable data storage and flow for a given utilization of resources such as storage space, communication bandwidth, power consumption, and/or processor execution cycles. Additionally, the system can respond to process variations that affect the optimal or beneficial parameters for controlling data flow and storage. One of skill in the art, having the benefit of the disclosures herein, will recognize that combinations of control of data storage schemes with data type control and knowledge about process operations for a system create powerful combinations in certain contemplated embodiments. For example, data of a higher resolution can be maintained for a longer period and made available if a need for the data arises, without incurring the full cost of storing the data permanently and/or communicating the data throughout every layer of the system.

**[1624]** In an embodiment, in an underground mining inspection system, certain detailed data regarding toxic gas concentrations, temperatures, noise, etc. may need to be captured and stored for regulatory purposes, but for ongoing operational purposes, perhaps only a single data point regarding one or more toxic gases is needed periodically. In this embodiment, the data storage profile for the system may indicate that only certain sensor data aligned with regulatory needs be stored in a certain manner that is long term and optionally only available as needed, while other sensor data required operationally be stored in a more accessible manner.

**[1625]** In another embodiment involving automotive brakes for fleet vehicles, data regarding brake use and performance may be acquired at high resolution and stored in a first data storage that is not transmitted throughout the network, while lower resolution data are transmitted periodically and/or in near real time to a fleet control and maintenance application. Should the application or other user require higher resolution data, it may be accessed from the first data storage.

**[1626]** In a further embodiment of manufacturing body and frame components of trucks and cars, certain detailed data regarding paint color, surface curvature, and other quality control measures may be captured and stored at high resolution, but for ongoing operational purposes, only low resolution data regarding throughput are transmitted. In this embodiment, the data storage profile for the system may indicate that only certain sensor data aligned with quality control needs be stored in a certain manner that is long term and optionally only available as needed, while other sensor data required operationally be stored in a more accessible manner.

**[1627]** In another example, data types, resolution, and the like can be configured and changed as the data flows through the system, according to values that are beneficial for the individual components handling the data, according to the utilized networking resources for the data, and/or according to accompanying data (e.g., a model, virtual sensor, and/or sensor fusion operation) where higher capability data would not improve the precision of the process utilizing the accompanying data.

**[1628]** In an embodiment, in rail condition monitoring systems, as rail condition data are acquired, each component of the system may require different resolutions of the same data. Continuing with this example, as real-time rail traffic data are acquired, these data may be stored and/or transmitted at low resolution in order to quickly disseminate the data throughout the system, while utilization and load data may be stored and utilized at higher resolution to track rail use fees and need for rail maintenance at a more granular level.

**[1629]** In another embodiment of a hydraulic pump operating in a tractor, as the tractor is in the field and does not have access to a network, data from on-board sensors may be acquired and stored in a local manner on the tractor at low resolution, but when the tractor regains access, data may be acquired and transmitted at high resolution.

**[1630]** In yet another embodiment of an actuator in a robotic handling unit in an automotive plant, data regarding the actuator may flow into multiple downstream systems, such as a production tracking system that utilizes the actuator data alone and an energy efficiency tracking system that utilizes the data in a sensor fusion with data from environmental sensors. Resolution of the actuator data may be configured differently as it is transmitted to each of these systems for their disparate uses.

**[1631]** In still another embodiment of a generator in a mine, data may be acquired regarding the performance of the generator, carbon monoxide levels near the generator and a cost for running the generator. Each component of a control system overseeing the mine may require different resolutions of the same data. Continuing with this example, as carbon monoxide data are acquired, these data may be stored and/or transmitted at low resolution in order to quickly disseminate the data throughout the system in order to properly alert workers. Performance and cost data may be stored and utilized at higher resolution to track economic efficiency and lifetime maintenance needs.

**[1632]** In an additional embodiment, sensors on a truck's wheel end may monitor lubrication, noise (e.g., grinding, vibration) and temperature. While in the field, sensor data may be transmitted remotely at low resolution for remote monitoring, but when within a threshold distance from a fleet maintenance facility, data may be transmitted at high resolution.

**[1633]** In another example, accompanying information for the data allows for efficient downstream processing (e.g., by a downstream device or process accessing the data) including unpackaging the data, readily determining where related higher capability data may be present in the system, and/or streamlining operations utilizing the data (e.g., reporting, modeling, alerting, and/or performing a sensor fusion or other system analysis). An embodiment includes storing high capability (e.g., high-sampling rate, high precision, indexed, etc.) in a first storage device in the system (e.g., close to the sensors in the network layer to preserve network communication resources) and sending lower capability data up the network layers (e.g., to a cloud-computing device), where the lower capability data includes accompanying information to access the stored high capability data, including accompanying data that may be accessible to a user (e.g., a header, message box, or other organically interfaceable accompanying data) and/or accessible to an automated process (e.g., structured data, XML, populated fields, or the like) where the process can utilize the accompanying data to automatically request, retrieve, or access the high capability data. In certain embodiments, accompanying data may further include information about the content, precision, sampling time, calibrations (e.g., de-bouncing, filtering, or other processing applied) such that an accessing component or user can determine without retrieving the high capability data whether such data will meet the desired parameters.

**[1634]** In an embodiment, vibration noise from vibration sensors attached to vibrators on an assembly line may be stored locally in a high resolution format while a low resolution version of the same data with accompanying information regarding the availability of ambient and local noise data for a sensor fusion may be transmitted to a cloud-based server. If a resident process on the server requires the high resolution data, such as a machine learning process, the server may retrieve the data at that time.

**[1635]** In another embodiment of an airplane engine, performance data aggregated from a plurality of sensors may be transmitted while in flight along with accompanying information to a remote site. The accompanying information, such as a header with metadata relating to historical plane information, may allow the remote site to efficiently analyze the performance data in the context of the historical data without having to access additional databases.

**[1636]** In a further embodiment of a coal crusher in a power generation facility, data accompanying low quality sensor data regarding the size of coal exiting the crusher may include information about the precision in the size measurement such that a technician can determine if the higher resolution data are needed to confirm a determination that the crusher needs to come offline for maintenance.

**[1637]** In yet a further embodiment of a drilling machine or production platform employed in oil and gas production, high capability data may be acquired and stored locally regarding parameters of the drill's and platform's operation, but only low capability data are transmitted off-site to conserve bandwidth. Along with the low capability data, accompanying information may include instructions on how an automated off-site process can automatically access the high capability data in the event that it is required.

**[1638]** In still a further embodiment, temperature sensors on a pump employed in oil & gas production or mining may be stored locally in a high resolution format while a low resolution version of the same data with accompanying

information regarding the availability of noise and energy use data for a sensor fusion may be transmitted to a cloud-based server. If a resident process on the server requires the high resolution data, such as a machine learning process, the server may retrieve the data at that time.

**[1639]** In another embodiment of a gearbox in an automatic robotic handling unit or an agricultural setting, performance data aggregated from a plurality of sensors may be transmitted while in use along with accompanying information to a remote site. The accompanying information, such as a header with metadata relating to historical gearbox information, may allow the remote site to efficiently analyze the performance data in the context of the historical data without having to access additional databases.

**[1640]** In a further embodiment of a ventilation system in a mine, data accompanying low quality sensor data regarding the size of particulates in the air may include information about the precision in the size measurement such that a technician can determine if the higher resolution data are needed to confirm a determination that the ventilation system requires maintenance.

**[1641]** In yet a further embodiment of a rolling bearing employed in agriculture, high capability data may be acquired and stored locally regarding parameters of the rolling bearing's operation, but only low capability data are transmitted off-site to conserve bandwidth. Along with the low capability data, accompanying information may include instructions on how an automated off-site process can automatically access the high capability data in the event that it is required.

**[1642]** In a further embodiment of a stamp mill in a mine, data accompanying low quality sensor data regarding the size of mineral deposits exiting the stamp mill may include information about the precision in the size measurement such that a technician can determine if the higher resolution data are needed to confirm a determination that the stamp mill requires a change in an operation parameter.

**[1643]** Referencing FIG. **176**, an example storage time definition **12536** is depicted. The example storage time definition **12536** depicts a number of storage locations **12556** corresponding to a number of time values **12558**. It is understood that any values such as storage types, storage media, storage access, storage protocols, storage writing values, storage security, and/or storage backup values, may be included in the storage time definition **12536**. Additionally or alternatively, an example storage time definition **12536** may include process operations, events, and/or other values in addition to or as an alternative to time values **12558**. The example storage time definition **12536** depicts movement of related sensor data to a first storage location **12550** over a first time interval, to a second storage location **12552** over a second time internal, and to a third storage location **12554** over a third time interval. The storage location values **12550**, **12552**, **12554** are depicted as an integral selection corresponding to planned storage locations, but additionally or alternatively the values may be continuous or discrete, but not necessarily integral values. For example, a storage location value **12550** of "1" may be associated with a first storage location, and a storage location value **12550** of "2" may be associated with a second storage location, where a value between "1" and "2" has an understood meaning—such as a prioritization to move the data (e.g., a "1.1" indicates that the data should be moved from "2" to "1" with a relatively high priority compared to a "1.4"), a percentage of the data to be moved (e.g., to control network utilization, memory utilization, or the like during a transfer operation), and/or a preference for a storage location with alternative options (e.g., to allow for directing storage location, and inclusion in a cost function such that storage location can be balanced with other constraints in the system). Additionally or alternatively, the storage time definition **12536** can include additional dimensions (e.g., changing protocols, media, security plans, etc.) and/or can include multiple options for the storage plan (e.g., providing a weighted value between 2, 3, 4, or more storage locations, protocols, media, etc. in a triangulated or multiple-dimension definition space).

**[1644]** Referencing FIG. **177** an example data resolution description **12540** is depicted. The example data resolution description **12540** depicts a number of data resolution values **12562** corresponding to a number of time values **12564**. It is understood that any values such as storage types, storage media, storage access, storage protocols, storage writing values, storage security, and/or storage backup values, may be included in the data resolution description **12540**. Additionally or alternatively, an example data resolution description **12540** may include process operations, events, and/or other values in addition to or as an alternative to time values **12558**. The example data resolution description **12540** depicts changes in the resolution of stored related sensor data resolution values **12560** over time intervals, for example operating at a low resolution initially, stepping up to a higher resolution (e.g., corresponding to a process start time), to a high resolution value (e.g., during a process time where the process is significantly improved by high resolution of the related sensor data), and to a low resolution value (e.g., after a completion of the process). The example depicts a higher resolution before the process starts than after the process ends as an illustrative example, but the data resolution description **12540** may include any data resolution trajectory. The data resolution values **12560** are depicted as integral selections corresponding to planned data resolutions, but additionally or alternatively the values may be continuous or discrete, but not necessarily integral values. For example, data resolution values **12560** of "1" may be associated with a first data resolution (e.g., a specific sampling time, byte resolution, etc.), and a data resolution values **12560** of "2" may be associated with a second data resolution, where a value between "1" and "2" has an understood meaning—such as a prioritization to sample at the defined resolution (e.g., a "1.1" indicates the data should be taken at a sampling rate corresponding to "1" with a relatively high priority compared to a "1.3", and/or at a sampling rate 10% of the way between the rate between "1" and "2"), and/or a preference for a data resolution with alternative options (e.g., to allow for sensor or network limitations, available sensor communication devices such as a data controller, smart sensor, or portable device taking the data from the sensor, and/or inclusion in a cost function such that data resolution can be balanced with other constraints in the system). Additionally or alternatively, the data resolution description **12540** can include additional dimensions (e.g., changing protocols, media, security plans, etc.) and/or can include multiple options for the data resolution plan (e.g., providing a weighted value between 2, 3, 4, or more data resolution values, protocols, media, etc. in a triangulated or multiple-dimension definition space).

**[1645]** An example system **12500** further includes a haptic feedback circuit **12530** that determines a haptic feedback instruction **12548** in response to at least one of the number of sensor values **12542** and/or the data storage profile **12532**, and a haptic feedback device **12516** responsive to the haptic feedback instruction **12548**. Example and non-limiting haptic feedback instructions **12548** include an instruction such as: a vibration command; a temperature command; a sound command; an electrical command; and/or a light command Example and non-limiting operations of the haptic feedback circuit **12530** include feedback that data is stored or being stored on the haptic feedback device **12516** and/or on a portable device associated with the user **12518** in communication with the haptic feedback device **12516** (e.g., user **12518** traverses through the system **12500** with a smart phone, which the system **12500** utilizes to store sensor data, and provides a haptic feedback instructions **12548** to notify the user **12518** that the smart phone is currently being utilized by the system **12500**, for example allowing the user **12518** to remain in communication with the sensor, data controller, or other transmitting device, and/or allowing the user to actively cancel or enable the data transfer). Additionally or alternatively, the haptic feedback device **12516** may be the smart phone (e g, utilizing vibration, sound, light, or other haptic aspects of the smart phone), and/or the haptic feedback device **12516** may include data storage and/or communication capabilities.

**[1646]** In certain embodiments, the haptic feedback circuit **12530** provides a haptic feedback instruction **12548** as an alert or notification to the user **12518**, for example to alert or notify the user **12518** that a process has commenced or is about to start, that an off-nominal operation is detected or predicted, that a component of the system requires or is predicted to require maintenance, that an aspect of the system is in a condition that the user **12518** may want to be aware of (e.g., a component is still powered, has high potential energy of any type, is at a high pressure, and/or is at a high temperature where the user **12518** may be in proximity to the component), that a data storage related aspect of the system is in a noteworthy condition (e.g., a data storage component of the system is at capacity, out of communication, is in a fault condition, has lost contact with a sensor, etc.), to request a response from the user **12518** (e.g., an approval to start a process, data transfer, process rate change, clear a fault, etc.) In certain embodiments, the haptic feedback circuit **12530** configures the haptic feedback instruction **12548** to provide an intuitive feedback to the user **12518**. For example, an alert value may provide a more rapid, urgent, and/or intermittent vibration mode relative to an informational notification; a temperature based alert or notification may utilize a temperature based haptic feedback (e.g., an overtemperature vessel notification may provide a warm or cold haptic feedback) and/or flashing a color that is associated with the temperature (e.g., flashing red for an overtemperature or blue for an under-temperature); an electrically based notification may provide an electrically associated haptic feedback (e.g., a sound associated with electricity such as a buzzing or sparking sound, or even a mild electrical feedback such as when a user is opening a panel for a component that is still powered); providing a vibration feedback for a bearing, motor, or other rotating or vibrating component that is operating off-nominally; and/or providing a requested feedback to the user based upon sensed data (e.g., transmitting a vibration profile to the haptic feedback device that is analogous to the detected vibration in a requested component for example allowing an expert user to diagnose the component without physical contact; providing a haptic feedback for a requested component for example if the user is double checking a lockout/tagout operation before entering a component, opening a panel, and/or entering a potentially hazardous area). The provided examples for operations of the haptic feedback circuit **12530** are non-limiting illustrations.

**[1647]** Referencing FIG. **178**, an example apparatus for data collection in an industrial environment **12566** includes a controller **12512** a sensor communication circuit **12522** that interprets a number of sensor data values **12542**, a sensor data storage profile circuit **12524** that determines a data storage profile **12532**, where the data storage profile **12532** includes a data storage plan for the number of sensor data values **12542**, and a network coding circuit **12568** that provides a network coding value **12570** in response to the number of sensor data values **12542** and the data storage profile **12532**. The controller **12512** further includes a sensor data storage implementation circuit **12526** that stores at least a portion of the number of sensor data values **12542** in response to the data storage profile **12532** and the network coding value **12570**. The network coding value **12570** includes, without limitation, network encoding for data transmission, such as packet sizing, distribution, combinations of sensor data within packets, encoding and decoding algorithms for network data and communications, and/or any other aspects of controlling network communications throughout the system. In certain embodiments, the network coding value **12570** includes a linear network coding algorithm, a random linear network coding algorithm, and/or a convolutional code. Additionally or alternatively, the network coding circuit **12568** provides scheduling and/or synchronization for network communication devices of the system, and can include separate scheduling and/or synchronization for separate networks in the system. The network coding circuit **12568** schedules the network coding value **12570** throughout the system according to the data volumes, transfer rates, and network utilization, and alternatively or additionally performs a self-learning and/or machine learning operation to improve or optimize network coding. For example, a sensor having a single low-volume data transfer to a data controller may utilize TCP/IP packet communication to the data controller without linear network coding, while higher volume aggregated data transfer from the data controller to another system component (e.g., the controller **12532**) may utilize linear network coding. The example network coding circuit **12568** adjusts the network coding value **12570** in real time for the components in the system to optimize or improve transfer rates, power utilization, errors and lost packets, and/or any other desired parameters. For example, a given component may have resulting low transfer rates but a large available memory, while a downstream component has a lower available memory (potentially relative to the data storage expectation for that component), and accordingly a complex network coding value **12570** for the given component may not result in improved throughput of data throughout the system, while a network coding value **12570** enhancing throughput for the downstream component may justify the processing overhead for a more complex network coding value **12570**.

**[1648]** An example system includes the network coding circuit **12568** further determining a network definition value

**12572**, and providing the network coding value **12570** further in response to the network definition value **12572**. Example network definition values **12572** include values such as: a network feedback value (e.g., transfer rates, up time, synchronization availability, etc.); a network condition value (e.g., presence of noise, transmission/receiver capability, drop-outs, etc.); a network topology value (e.g., the communication flow and connectivity of devices; operating systems, protocols, and storage types of devices; available computing resources on devices; the location and function of devices in the system); an intermittently available network device value (e.g., a known or observed availability for the device over time or process stage; predicted availability of the device; prediction of known noise factors for the device, such as process operations that reduce device availability); and/or a network cost description value (e.g., resource utilization of the device, including relative cost or impact of processing, memory, and/or communication resources; power utilization and cost of power consumption for devices; available power for the device and a cost description for externalities related to consuming the power—such as for a battery where the power itself may not be expensive but the power in the specific location has a cost associated with replacement, including availability or access to the device during operations).

**[1649]** An example system includes the network coding circuit **12568** further providing the network coding value **12570** such that the sensor data storage implementation circuit stores a first portion of the number of sensor data values **12542** utilizing a first network coding value **12570**, and a second portion of the number of sensor data values **12542** utilizing a second network coding value **12570** (e.g., the network coding values **12570** can vary with the data being transmitted, the transmitting device, and/or over time or process stage). Example and non-limiting network coding values include: a network type selection (e.g., public, private, wireless, wired, intranet, external, internet, cellular, etc.), a network selection (e.g., which one or more of an available number of networks will be utilized), a network coding selection (e.g., packet definitions, encoding techniques, linear, randomized linear, convolution, triangulated, etc.), a network timing selection (e.g., synchronization and sequencing of data transmissions between devices), a network feature selection (e.g., turning on or off network support devices or repeaters; enabling, disabling, or adjusting security selections; increasing or decreasing a power of a device, etc.), a network protocol selection (e.g., TCP/IP, FTP, Wi-Fi, Bluetooth, Ethernet, and/or routing protocols); a packet size selection (including header and/or parity information); and/or a packet ordering selection (e.g., determining how to transmit the various sensor information that may be on a device, and/or determining the packet to data value correspondence). An example network coding circuit **12568** further adjusts the network coding value **12570** to provide an intermediate network coding value (e.g., as a test coding value on the system, and/or as a modeled coding value being run off-line), to compare a performance indicator **12574** corresponding to each of the network coding value **12570** and the intermediate network coding value, and to provide an updated network coding value (e.g., as the network coding value **12570**) in response to the comparison of the performance indicators **12574**.

**[1650]** An example system includes an industrial system having a number of components, and a number of sensors each operatively coupled to at least one of the number of components. The number of sensors provide a number of sensor values, and the system further includes a number of organizing structures such as a controller, a data collector, a plant computer, a cloud-based server and/or global computing device, and/or a network layer, where the organizing structures are configured for self-organizing storage of at least a portion of the number of sensor values. For example, operations of the controller **12512** provide for storage and distribution of sensor data values to reduce consumption of resources (processor, network, and/or memory) for storing sensor data. The self-organizing operations include management of the stored sensor data over time, including providing sensor information to system components in time to complete operations therefore (e.g., control, improvement, modeling, and/or machine learning for process operations of the system). Additionally, data security, including long-term security due to storage media, geographic, and/or unauthorized access, is considered throughout the data storage life cycle. An example system further includes the organizing structures providing enhanced resolution of the number of sensor values in response to at least one of an enhanced data request value or an alert value corresponding to the industrial system. The system provides enhanced resolution by controlling the storage processes to address system impact, including keeping lower resolution, summary, or other accessibility data available, and storing higher resolution data in a lower resource utilization manner which is available upon request and/or at a time appropriate to system operations. Example enhanced resolution includes: an enhanced spatial resolution, an enhanced time domain resolution, a greater number of the number of sensor values than a standard resolution of the number of sensor values, and/or a greater precision of at least one of the number of sensor values than a standard resolution of the number of sensor values. An example system further includes a network layer, where the organizing structures are configured for self-organizing network coding for communication of the number of sensor values on the network layer. An example system further includes a haptic feedback device of a user in proximity to at least one of the industrial system or the network layer, and where the organizing structures are configured for providing haptic feedback to the haptic feedback device, and/or for configuring the haptic feedback to provide an intuitive alert to the user.

**[1651]** In embodiments, a system for data collection in an industrial environment may comprise: a sensor communication circuit structured to interpret a plurality of sensor data values; a sensor data storage profile circuit structured to determine a data storage profile, the data storage profile comprising a data storage plan for the plurality of sensor data values; and a sensor data storage implementation circuit structured to store at least a portion of the plurality of sensor data values in response to the data storage profile. In embodiments, the data storage profile may include a storage location definition corresponding to at least one of the plurality of sensor data values, the storage location definition comprising at least one location selected from the locations consisting of: a sensor storage location, a sensor communication device storage location, a regional network storage location, and a global network storage location. The data storage profile may include a storage time definition corresponding to at least one of the plurality of sensor data values, the storage time definition comprising at least one

time value selected from the time values consisting of: a time domain description over which the corresponding at least one of the plurality of sensor data values is to be stored; a time domain storage trajectory comprising a plurality of time values corresponding to a plurality of storage locations over which the corresponding at least one of the plurality of sensor data values is to be stored; a process description value over which the corresponding at least one of the plurality of sensor data values is to be stored; and a process description trajectory comprising a plurality of process stages corresponding to a plurality of storage locations over which the corresponding at least one of the plurality of sensor data values is to be stored. The data storage profile may include a data resolution description corresponding to at least one of the plurality of sensor data values, wherein the data resolution description comprises at least one of: a detection density value corresponding to the at least one of the plurality of sensor data values; a detection density value corresponding to a plurality of the at least one of the plurality of the sensor data values; a detection density trajectory comprising a plurality of detection density values of the at least one of the plurality of sensor data values, each of the plurality of detection density values corresponding to a time value; a detection density trajectory comprising a plurality of detection density values of the at least one of the plurality of sensor data values, each of the plurality of detection density values corresponding to a process stage value; and a detection density trajectory comprising a plurality of detection density values of the at least one of the plurality of sensor data values, each of the plurality of detection density values corresponding to a storage location value. The sensor data storage profile circuit may be further structured to update the data storage profile after the operations of the sensor data storage implementation circuit, and wherein the sensor data storage implementation circuit is further structured to store the portion of the plurality of sensor data values in response to the updated data storage profile. The sensor data storage profile circuit may be further structured to update the data storage profile in response to external data, the external data comprising at least one data value selected from the data values consisting of: an enhanced data request value; a process success value; a process failure value; a component service value; a component maintenance value; a network description value; a process feedback value; a network feedback value; a sensor feedback value; and a second data storage profile, the second data storage profile generated for an offset system. A storage planning circuit may be structured to determine a data configuration plan, to update the data storage profile in response to the data configuration plan, and wherein the sensor data storage implementation circuit is further structured to store the at least a portion of the plurality of sensor data values in response to the updated data storage profile. The data configuration plan may include at least one value selected from the values consisting of: a data storage structure value; a data compression value; a data write strategy value; a data hierarchy value; an enhanced access value determined for the data; and an instruction value corresponding to the data. A haptic feedback circuit may be structured to determine a haptic feedback instruction in response to at least one of the plurality of sensor values or the data storage profile; and a haptic feedback device responsive to the haptic feedback instruction. The haptic feedback instruction may include at least one instruction selected from the instructions consisting of: a vibration command; a temperature command; a sound command; an electrical command; and a light command. The data storage plan may be generated by a rule-based expert system utilizing feedback, wherein the feedback relates to one or more of an aspect of the industrial environment or the plurality of sensor data values. The data storage plan may be generated by a model-based expert system utilizing feedback, wherein the feedback relates to one or more of an aspect of the industrial environment or the plurality of sensor data values. The data storage plan may be generated by an iterative expert system utilizing feedback, wherein the feedback relates to one or more of an aspect of the industrial environment or the plurality of sensor data values. The data storage plan may be generated by a deep learning machine system utilizing feedback, wherein the feedback relates to one or more of an aspect of the industrial environment or the plurality of sensor data values. The data storage plan may be based on one or more an underlying physical media type of the storage, a type of device or system on which storage resides, and a mechanism by which storage can be accessed for reading or writing data. The underlying physical media may be one of a tape media, a hard disk drive media, a flash memory media, a non-volatile memory, an optical media, and a one-time programmable memory. The data storage plan may account for or specifies a parameter relating to the underlying physical media comprising one or more of a storage duration, a power usage, a reliability, a redundancy, a thermal performance factor, a robustness to environmental conditions, an input/output speed and capability, a writing speed, a reading speed, a data file organization, an operating system, a read-write life cycle, a data error rate, and a data compression aspect related to or inherent to the underlying physical media or a media controller. The data storage plan may include one or more of a storage type plan, a storage media plan, a storage access plan, a storage protocol plan, a storage writing protocol plan, a storage security plan, a storage location plan, and a storage backup plan.

**[1652]** In embodiments, a system for data collection in an industrial environment may comprise: a sensor communication circuit structured to interpret a plurality of sensor data values; a sensor data storage profile circuit structured to determine a data storage profile, the data storage profile comprising a data storage plan for the plurality of sensor data values; a network coding circuit structured to provide a network coding value in response to the plurality of sensor data values and the data storage profile; and a sensor data storage implementation circuit structured to store at least a portion of the plurality of sensor data values in response to the data storage profile and the network coding value. The network coding circuit may be structured to determine a network definition value, and to provide the network coding value further in response to the network definition value, wherein the network definition value comprises at least one value selected from the values consisting of: a network feedback value; a network condition value; a network topology value; an intermittently available network device value; and a network cost description value. The network coding circuit may be structured to provide the network coding value such that the sensor data storage implementation circuit stores a first portion of the plurality of sensor data values utilizing a first network coding value, and a second portion of the plurality of sensor data values utilizing a second network coding value. The network coding value

may include at least one of the values selected from the values consisting of: a network type selection, a network selection, a network coding selection, a network timing selection, a network feature selection, a network protocol selection, a packet size selection, and a packet ordering selection. The network coding circuit may be further structured to adjust the network coding value to provide an intermediate network coding value, to compare a performance indicator corresponding to each of the network coding value and the intermediate network coding value, and to provide an updated network coding value in response to the comparison of the performance indicators.

**[1653]** In embodiments, a system may comprise: an industrial system comprising a plurality of components, and a plurality of sensors each operatively coupled to at least one of the plurality of components; the plurality of sensors providing a plurality of sensor values; and a means for self-organizing storage of at least a portion of the plurality of sensor values. In embodiments, a means may be provided for enhancing resolution of the plurality of sensor values in response to at least one of an enhanced data request value or an alert value corresponding to the industrial system; and wherein the enhanced resolution comprises at least one of an enhanced spatial resolution, an enhanced time domain resolution, a greater number of the plurality of sensor values than a standard resolution of the plurality of sensor values, and a greater precision of at least one of the plurality of sensor values than the standard resolution of the plurality of sensor values. The system may include a network layer, and a means for self-organizing network coding for communication of the plurality of sensor values on the network layer. The system may include a means for providing haptic feedback to a haptic feedback device of a user in proximity to at least one of the industrial system or the network layer. The system may include a means for configuring the haptic feedback to provide an intuitive alert to the user.

**[1654]** In embodiments, a system for self-organizing data storage for data collected from a mine may comprise: a sensor communication circuit structured to interpret a plurality of sensor data values; a sensor data storage profile circuit structured to determine a data storage profile, the data storage profile comprising a data storage plan for the plurality of sensor data values; and a sensor data storage implementation circuit structured to store at least a portion of the plurality of sensor data values in response to the data storage profile. In embodiments, the system may include a self-organizing data storage for data collected from an assembly line, including: a sensor communication circuit structured to interpret a plurality of sensor data values; a sensor data storage profile circuit structured to determine a data storage profile, the data storage profile comprising a data storage plan for the plurality of sensor data values; and a sensor data storage implementation circuit structured to store at least a portion of the plurality of sensor data values in response to the data storage profile.

**[1655]** In embodiments, a system for self-organizing data storage for data collected from an agricultural system may comprise: a sensor communication circuit structured to interpret a plurality of sensor data values; a sensor data storage profile circuit structured to determine a data storage profile, the data storage profile comprising a data storage plan for the plurality of sensor data values; and a sensor data storage implementation circuit structured to store at least a portion of the plurality of sensor data values in response to the data storage profile.

**[1656]** In embodiments, a system for self-organizing data storage for data collected from an automotive robotic handling unit may comprise: a sensor communication circuit structured to interpret a plurality of sensor data values; a sensor data storage profile circuit structured to determine a data storage profile, the data storage profile comprising a data storage plan for the plurality of sensor data values; and a sensor data storage implementation circuit structured to store at least a portion of the plurality of sensor data values in response to the data storage profile.

**[1657]** In embodiments, a system for self-organizing data storage for data collected from an automotive system may comprise: a sensor communication circuit structured to interpret a plurality of sensor data values; a sensor data storage profile circuit structured to determine a data storage profile, the data storage profile comprising a data storage plan for the plurality of sensor data values; and a sensor data storage implementation circuit structured to store at least a portion of the plurality of sensor data values in response to the data storage profile.

**[1658]** In embodiments, a system for self-organizing data storage for data collected from an automotive robotic handling unit may include: a sensor communication circuit structured to interpret a plurality of sensor data values; a sensor data storage profile circuit structured to determine a data storage profile, the data storage profile comprising a data storage plan for the plurality of sensor data values; and a sensor data storage implementation circuit structured to store at least a portion of the plurality of sensor data values in response to the data storage profile.

**[1659]** In embodiments, a system for self-organizing data storage for data collected from an aerospace system may comprise: a sensor communication circuit structured to interpret a plurality of sensor data values; a sensor data storage profile circuit structured to determine a data storage profile, the data storage profile comprising a data storage plan for the plurality of sensor data values; and a sensor data storage implementation circuit structured to store at least a portion of the plurality of sensor data values in response to the data storage profile.

**[1660]** In embodiments, a system for self-organizing data storage for data collected from a railway may include: a sensor communication circuit structured to interpret a plurality of sensor data values; a sensor data storage profile circuit structured to determine a data storage profile, the data storage profile comprising a data storage plan for the plurality of sensor data values; and a sensor data storage implementation circuit structured to store at least a portion of the plurality of sensor data values in response to the data storage profile.

**[1661]** In embodiments, a system for self-organizing data storage for data collected from an oil and gas production system may comprise: a sensor communication circuit structured to interpret a plurality of sensor data values; a sensor data storage profile circuit structured to determine a data storage profile, the data storage profile comprising a data storage plan for the plurality of sensor data values; and a sensor data storage implementation circuit structured to store at least a portion of the plurality of sensor data values in response to the data storage profile.

**[1662]** In embodiments, a system for self-organizing data storage for data collected from a power generation system, the system comprising: a sensor communication circuit structured to interpret a plurality of sensor data values; a sensor data storage profile circuit structured to determine a data storage profile, the data storage profile comprising a data storage plan for the plurality of sensor data values; and a sensor data storage implementation circuit structured to store at least a portion of the plurality of sensor data values in response to the data storage profile.

**[1663]** In embodiments, methods and systems are provided for data collection in or relating to one or more machines deployed in an industrial environment using self-organized network coding for network transmission of sensor data in a network. In embodiments, network coding may be used to specify and manage the manner in which packets (including streams of packets as noted in various embodiments disclosed throughout this disclosure and the documents incorporated by reference) are relayed from a sender (e.g., a data collector, instrumentation system, computer, or the like in an industrial environment where data is collected, such as from sensors or instruments on, in or proximal to industrial machines or from data storage in the environment) to a receiver (e.g., another data collector (such as in a swarm or coordinated group), instrumentation system, computer, storage, or the like in the industrial environment, or to a remote computer, server, cloud platform, database, data pool, data marketplace, mobile device (e.g., mobile phone, personal computer, tablet, or the like), or other network-connected device of system), such as via one or more network infrastructure elements (referred to in some cases herein as nodes), such as access points, switches, routers, servers, gateways, bridges, connectors, physical interfaces and the like, using one or more network protocols, such as IP-based protocols, TCP/IP, UDP, HTTP, Bluetooth, Bluetooth Low Energy, cellular protocols, L 1E, 2G, 3G, 4G, 5G, CDMA, TDSM, packet-based protocols, streaming protocols, file transfer protocols, broadcast protocols, multi-cast protocols, unicast protocols, and others. For situations involving bi-directional communication, any of the above-referenced devices or systems, or others mentioned throughout this disclosure, may play the role of sender or receiver, or both. Network coding may account for availability of networks, including the availability of multiple alternative networks, such that a transmission may be delivered across different networks, either separated into different components or sending the same components redundantly. Network coding may account for bandwidth and spectrum availability; for example, a given spectrum may be divided (such as with sub-dividing spectrum by frequency, by time-division multiplexing, and other techniques). Networks or components thereof may be virtualized, such as for purposes of provisioning of network resources, specification of network coding for a virtualized network, or the like. Network coding may include a wide variety of approaches as described in Appendix A, and in connection with Figures in Appendix A.

**[1664]** In embodiments, one or more network coding systems or methods of the present disclosure may use self-organization, such as to configure network coding parameters for one or more transmissions over one or more networks using an expert system, which may comprise a model-based system (such as automatically selecting network coding parameters or configuration based on one or more defined or measured parameters relating to a transmission, such as parameters of the data or content to be transmitted, the sender, the receiver, the available network infrastructure components, the conditions of the network infrastructure, the conditions of the industrial environment, or the like). A model may, for example, account for parameters relating to file size, numbers of packets, size of a stream, criticality of a data packet or stream, value of a packet or stream, cost of transmission, reliability of a transmission, quality of service, quality of transmission, quality of user experience, financial yield, availability of spectrum, input/output speed, storage availability, storage reliability, and many others as noted throughout this disclosure. In embodiments, the expert system may comprise a rule-based system, where one or more rules is executed based on detection of a condition or parameter, calculation of a variable, or the like, such as based on any of the above-noted parameters. In embodiments, the expert system may comprise a machine learning system, such as a deep learning system, such as based on a neural network, a self-organizing map, or other artificial intelligence approach (including any noted throughout this disclosure or the documents incorporated by reference). A machine learning system in any of the embodiments of this disclosure may configure one or more inputs, weights, connections, functions (including functions of individual neurons or groups of neurons in a neural net) or other parameters of an artificial intelligence system. Such configuration may occur with iteration and feedback, optionally involving human supervision, such as by feeding back various metrics of success or failure. In the case of network coding, configuration may involve setting one or more coding parameters for a network coding specification or plan, such as parameters for selection of a network, selection one or more nodes, selection of data path, configuration of timers or timing parameters, configuration of redundancy parameters, configuration of coding types (including use of regenerating codes, such as for use of network coding for distributed storage, such as in peer-to-peer networks, such as a peer-to-peer network of data collectors, or a storage network for a distributed ledger, as noted elsewhere in this disclosure), coefficients for coding (including linear algebraic coefficients), parameters for random or near-random linear network coding (including generation of near random coefficients for coding), session configuration parameters, or other parameters noted in the network coding embodiments described below, throughout this disclosure, and in the documents incorporated herein by reference. For example, a machine learning system may configure the selection of a protocol for a transmission, the selection of what network(s) will be used, the selection of one or more senders, the selection of one or more routes, the configuration of one or more network infrastructure nodes, the selection of a destination receiver, the configuration of a receiver, and the like. In embodiments, each one of these may be configured by an individual machine learning system, or the same system may configure an overall configuration by adjusting various parameters of one or more of the above under iteration, through a series of trials, optionally seeded by a training set, which may be based on human configuration of parameters, or by model-based and/or rule-based configuration. Feedback to a machine learning system may comprise various measures, including transmission success or failure, reliability, efficiency (including cost-based, energy-based and other measures of efficiency, such

as measuring energy per bit transmitted, energy per bit stored, or the like), quality of transmission, quality of service, financial yield, operational effectiveness, success at prediction, success at classification, and others. In embodiments, a machine learning system may configure network coding parameters by predicting network behavior or characteristics and may learn to improve prediction using any of the techniques noted above. In embodiments, a machine learning system may configure network coding parameters by classification of one or more network elements and/or one or more network behaviors and may learn to improve classification, such as by training and iteration over time. Such machine-based prediction and/or classification may be used for self-organization, including by model-based, rule-based, and machine learning-based configuration. Thus, self-organization of network coding may use or comprise various combinations or permutations of model-based systems, rule-based systems, and a variety of different machine-learning systems (including classification systems, prediction systems, and deep learning systems, among others).

**[1665]** As described in US patent application 2017/0013065, entitled "Cross-session network communication configuration," network coding may involve methods and systems for data communication over a data channel on a data path between a first node and a second node and may include maintaining data characterizing one or more current or previous data communication connections traversing the data channel and initiating a new data communication connection between the first node and the second node including configuring the new data communication connection at least in part according to the maintained data. The maintained data may characterize one or more data channels on one or more data paths between the first node and the second node over which said one or more current or previous data communication connections pass. The maintained data may characterize an error rate of the one or more data channels. The maintained data may characterize a bandwidth of the one or more data channels. The maintained data may characterize a round trip time of the one or more data channels. The maintained data may characterize communication protocol parameters of the one or more current or previous data communication connections.

**[1666]** The communication protocol parameters may include one or more of a congestion window size, a block size, an interleaving factor, a port number, a pacing interval, a round trip time, and a timing variability. The communication protocol parameters may include two or more of a congestion window size, a block size, an interleaving factor, a port number, a pacing interval, a round trip time, and a timing variability.

**[1667]** The maintained data may characterize forward error correction parameters associated with the one or more current or previous data communication connections. The forward error correction parameters may include a code rate. Initiating the new data communication connection may include configuring the new data communication connection according to first data of the maintained data, the first data is maintained at the first node, and initiating the new data communication connection includes providing the first data from the first node to the second node for configuring the new data communication connection.

**[1668]** Initiating the new data communication connection may include configuring the new data communication connection according to first data of the maintained data, the first data is maintained at the first node, and initiating the new data communication connection includes accessing first data at the first node for configuring the new data communication connection. Any one of these elements of maintained data, including various parameters of communication protocol, error correction parameters, connection parameters, and others, may be provided to the expert system for supporting self-organization of network coding, including for execution of rules to set network coding parameters based on the maintained data, for population of a model, or for configuration of parameters of a neural net or other artificial intelligence system.

**[1669]** Initiating the new data communication connection may include configuring the new data communication connection according to first data of the maintained data, the first data being maintained at the first node, and initiating the new data communication connection includes accepting a request from the first node for establishing the new data communication connection between the first node and the second node, including receiving, at the second node, at least one message from the first node comprising the first data for configuring said connection. The method may include maintaining the new data communication connection between the first node and the second node, including maintaining communication parameters, including initializing said communication parameters according the first data received in the at least one message from the first node.

**[1670]** Maintaining the new data communication connection may include adapting the communication parameters according to feedback from the first node. The feedback from the first node may include feedback messages received from the first node. The feedback may include feedback derived from a plurality of feedback messages received from the first node. Feedback may relate to any of the types of feedback noted above, and may be used for self-organizing the data communication connection using the expert system.

**[1671]** In some examples, one or more training communication connections over a data channel on a data path are employed prior to establishment of data communication connections over the data channel on the data path. The training communication connections are used to collect information about the data channel which is then used when establishing the data communication connections. In other examples, no training communication connections are employed and information about the data channel is obtained from one or more previous or current data communication connection over the data channel on the data path.

**[1672]** The present disclosure describes a method for data communication over a data channel on a data path between a first node and a second node, the method according to one disclosed non-limiting embodiment of the present disclosure can include maintaining data characterizing one or more current or previous data communication connections traversing the data channel, and initiating a new data communication connection between the first node and the second node including configuring the new data communication connection at least in part according to the maintained data, wherein the configuration of the new data communication connection is configured by an expert system.

**[1673]** A further embodiment of any of the foregoing embodiments of the present disclosure may include situations wherein the expert system uses at least one of a rule and a model to set a parameter of the configuration.

**[1674]** A further embodiment of any of the foregoing embodiments of the present disclosure may include situations wherein the expert system is a machine learning system that iteratively configures at least one of a set of inputs, a set of weights, and a set of functions based on feedback relating to the data channel.

**[1675]** A further embodiment of any of the foregoing embodiments of the present disclosure may include situations wherein the expert system takes a plurality of inputs from a data collector that accepts data about a machine operating in an industrial environment

**[1676]** As described in US patent application 2017/0012861, entitled "Multi-path network communication," self-organized network coding under control of an expert system may involve methods and systems for data communication between a first node and a second node over a number of data paths coupling the first node and the second node and may include transmitting messages between the first node and the second node over the number of data paths, including transmitting a first subset of the messages over a first data path of the number of data paths and transmitting a second subset of the messages over a second data path of the number of data paths. In situations where the first data path has a first latency and the second data path has a second latency substantially larger than the first latency, and messages of the first subset of the messages are chosen to have first message characteristics and messages of the second subset are chosen to have second message characteristics, different from the first message characteristics.

**[1677]** Messages having the first message characteristics, targeted for data paths of lower latency, may include time critical messages; for example, in an industrial environment, messages relating to a critical fault condition of a machine (e.g., overheating, excessive vibration, or any of the other fault conditions described throughout this disclosure) or relating to a safety hazard, or a time-critical operational step on which other processes depend (e.g., completion of a catalytic reaction, completion of a sub-assembly, or the like in a high-value, high-speed manufacturing process, a refining process, or the like) may be designated as time critical (such as by a rule that can be parsed or processed by a rules engine) or may be learned to be time-critical by the expert system, such as based on feedback regarding outcomes over time, including outcomes for similar machines having similar data in similar industrial environments. The first subset of the messages and the second subset of the messages may be determined from a portion of the messages available at the first node at a time of transmission. At a subsequent time of transmission, additional messages made available to the first node may be divided into the first subset and the second subset based on message characteristics associated with the additional messages. Division into subsets and selection of what subsets are targeted to what data path may be undertaken by an expert system. Messages having the first message characteristics may be associated with an initial subset of a data set and messages having the second message characteristics may be associated with a subsequent subset of the data set. The methods and systems described herein for selecting inputs for data collection and for multiplexing data may be organized, such as by an expert system, to configure inputs for the alternative channels, such as by providing streaming elements that have real-time significance to the first data path and providing other elements, such as for long-term, predictive maintenance, to the other data path. In embodiments, the messages of the second subset may include messages that are at most n messages ahead of a last acknowledged message in a sequential transmission order associated with the messages, wherein n is determined based on a buffer size at one of the first and second nodes.

**[1678]** Messages having the first message characteristics may include acknowledgement messages and messages having the second message characteristics may include data messages. Messages having the first message characteristics may include supplemental data messages. The supplemental data messages may include data messages may include redundancy data and messages having the second message characteristics may include original data messages. The first data path may include a terrestrial data path and the second data path may include a satellite data path. The terrestrial data path may include one or more of a cellular data path, a digital subscriber line (DSL) data path, a fiber optic data path, a cable internet based data path, and a wireless local area network data path. The satellite data path may include one or more of a low earth orbit satellite data path, a medium earth orbit satellite data path, and a geostationary earth orbit satellite data path. The first data path may include a medium earth orbit satellite data path or a low earth orbit satellite data path and the second data path may include a geostationary orbit satellite data path.

**[1679]** The method may further include, for each path of the number of data paths, maintaining an indication of successful and unsuccessful delivery of the messages over the data path and adjusting a congestion window for the data path based on the indication, which may occur under control of an expert system, including based on feedback of outcomes of a set of transmissions. The method may further include, for each path of the number of data paths, maintaining, at the first node, an indication of whether a number of messages received at the second node is sufficient to decode data associated with the messages, wherein the indication is based on feedback received at the first node over the number of data paths.

**[1680]** In another general aspect, a system for data communication between a number of nodes over a number of data paths coupling the number of nodes includes a first node configured to transmit messages to a second node over the number of data paths including transmitting a first subset of the messages over a first data path of the number of data paths, and transmitting a second subset of the messages over a second data path of the number of data paths.

**[1681]** In embodiments, the first subset of the messages and the second subset of the messages for the respective data paths may be determined from a portion of the messages available at a first node at a time of transmission. At a subsequent time of transmission, additional messages made available to the first node may be divided into a first subset and a second subset based on message characteristics associated with the additional messages. Messages having the first message characteristics may be associated with an initial subset of a data set and messages having the second message characteristics may be associated with a subsequent subset of the data set.

**[1682]** In embodiments, the messages of the second subset may include messages that are at most n messages ahead of a last acknowledged message in a sequential transmission order associated with the messages, wherein n is determined based on a receive buffer size at the second node. Messages

having the first message characteristics may include acknowledgement messages and messages having the second message characteristics may include data messages. Messages having the first message characteristics may include supplemental data messages. The supplemental data messages may include data messages including redundancy data and messages having the second message characteristics may include original data messages.

**[1683]** The first node may be further configured to, for each path of the number of data paths, maintain an indication of successful and unsuccessful delivery of the messages over the data path and adjust a congestion window for the data path based on the indication. The first node may be further configured to maintain an aggregate indication of whether a number of messages received at the second node over the number of data paths is sufficient to decode data associated with the messages and to transmit supplemental messages based on the aggregate indication, wherein the aggregate indication is based on feedback from the second node received at the first node over the number of data paths.

**[1684]** The present disclosure describes a method for data communication between a first node and a second node over a plurality of data paths coupling the first node and the second node, the method according to one disclosed non-limiting embodiment of the present disclosure can include transmitting messages between the first node and the second node over the plurality of data paths including transmitting a first subset of the messages over a first data path of the plurality of data paths, and transmitting a second subset of the messages over a second data path of the plurality of data paths, wherein the first data path has a first latency and the second data path has a second latency substantially larger than the first latency, and messages of the first subset of the messages are chosen to have first message characteristics and messages of the second subset are chosen to have second message characteristics, different from the first message characteristics, wherein the selection of the first and second subset of message characteristics is performed automatically under control of an expert system.

**[1685]** A further embodiment of any of the foregoing embodiments of the present disclosure may include situations wherein the expert system uses at least one of a rule and a model to set a parameter of the selection.

**[1686]** A further embodiment of any of the foregoing embodiments of the present disclosure may include situations wherein the expert system is a machine learning system that iteratively configures at least one of a set of inputs, a set of weights, and a set of functions based on feedback relating to at least one of the data paths.

**[1687]** A further embodiment of any of the foregoing embodiments of the present disclosure may include situations wherein the expert system takes a plurality of inputs from a data collector that accepts data about a machine operating in an industrial environment.

**[1688]** As described in US patent application 2017/0012868, entitled "Multiple protocol network communication," self-organized network coding under control of an expert system may involve methods and systems for data communication between a first node and a second node over one or more data paths coupling the first node and the second node and may include transmitting messages between the first node and the second node over the data paths, including transmitting at least some of the messages over a first data path using a first communication protocol, transmitting at least some of the messages over a second data path using a second communication protocol, determining that the first data path is altering a flow of messages over the first data path due to the messages being transmitted using the first communication protocol, and in response to the determining, adjusting a number of messages sent over the data paths, including decreasing a number of the messages transmitted over the first data path and increasing a number of messages transmitted over the second data path. Determination that the first data path is altering a flow of messages and/or adjusting the number of messages sent over the data paths may occur under control of an expert system, such as a rule-based system, a model-based system, a machine learning system (including deep learning) or a hybrid of any of those, where the expert system takes inputs relating to one or more of the data paths, the nodes, the communication protocols used, or the like. The data paths may be among devices and systems in an industrial environment, such as instrumentation systems of industrial machines, one or more mobile data collectors (optionally coordinated in a swarm), data storage systems (including network-attached storage), servers and other information technology elements, any of which may have or be associated with one or more network nodes. The data paths may be among any such devices and systems and devices and systems in a network of any kind (such as switches, routers, and the like) or between those and ones located in a remote environment, such as in an enterprise's information technology system, in a cloud platform, or the like.

**[1689]** Determining that the first data path is altering the flow of messages over the first data path may include determining that the first data path is limiting a rate of messages transmitted using the first communication protocol. Determining that the first data path is altering the flow of messages over the first data path may include determining that the first data path is dropping messages transmitted using the first communication protocol at a higher rate than a rate at which the second data path is dropping messages transmitted using the second communication protocol. The first communication protocol may be the User Datagram Protocol (UDP), and the second communication protocol may be the Transmission Control Protocol (TCP), or vice versa. Other protocols as described throughout this disclosure may be used.

**[1690]** The messages may be initially equally divided or divided according to some predetermined allocation (such as by type, as noted in connection with other embodiments) across the first data path and the second data path, such as using a load balancing technique. The messages may be initially divided across the first data path and the second data path according to a division of the messages across the first data path and the second data path in one or more prior data communication connections. The messages may be initially divided across the first data path and the second data path based on a probability that the first data path will alter a flow of messages over the first data path due to the messages being transmitted using the first communication protocol.

**[1691]** The messages may be divided across the first data path and the second data path based on message type. The message type may include one or more of acknowledgement messages, forward error correction messages, retransmission messages, and original data messages. Decreasing a number of the messages transmitted over the first data path and increasing a number of messages transmitted over the

second data path may include sending all of the messages over the second path and sending none of the messages over the first path.

**[1692]** At least some of the number of data paths may share a common physical data path. The first data path and the second data path may share a common physical data path. The adjusting of the number of messages sent over the number of data paths may occur during an initial phase of the transmission of the messages. The adjusting of the number of messages sent over the number of data paths may repeatedly occur over a duration of the transmission of the messages. The adjusting of the number of messages sent over the number of data paths may include increasing a number of the messages transmitted over the first data path and decreasing a number of messages transmitted over the second data path.

**[1693]** In some examples, the parallel transmission over TCP and UDP is handled differently from conventional load balancing techniques, because TCP and UDP both share a low-level data path and nevertheless have very different protocol characteristics.

**[1694]** In some examples, approaches respond to instantaneous network behavior and learn the network's data handling policy and state by probing for changes. In an industrial environment, this may include learning policies relating to authorization to use aspects of a network; for example, a SCADA system may allow a data path to be used only by a limited set of authorized users, services, or applications, because of the sensitivity of underlying machines or processes that are under control (including remote control) via the SCADA system and concern over potential for cyberattacks. Unlike conventional load-balancers, which assume each data path is unique and does not affect the other, approaches may recognize that TCP and UDP share a low-level data path and directly affect each other. Additionally, TCP provides in-order delivery and retransmits data (along with flow control, congestion control, etc.) whereas UDP does not. This uniqueness requires additional logic provided by the methods and systems disclosed herein that may include mapping specific message types to each communication protocol, such as based at least in part on the different properties of the protocols (e.g., expect longer jitter over TCP, expect out-of-order delivery on UDP). For example, the system may refrain from coding over packets sent through TCP, since it is reliable, but may send forward error correction over UDP to add redundancy and save bandwidth. In some examples, a larger ACK interval is used for ACKing TCP data.

**[1695]** By employing the techniques described herein, approaches distribute data over TCP and UDP data paths to achieve optimal or near-optimal throughput, such as in situations where a network provider's policies treat UDP unfairly (as compared to conventional systems that simply use UDP if possible and fall back to TCP if not).

**[1696]** A method for data communication between a first node and a second node over a plurality of data paths coupling the first node and the second node, the method comprising:

transmitting messages between the first node and the second node over the plurality of data paths including transmitting at least some of the messages over a first data path of the plurality of data paths using a first communication protocol, and transmitting at least some of the messages over a second data path of the plurality of data paths using a second communication protocol;

determining that the first data path is altering a flow of messages over the first data path due to the messages being transmitted using the first communication protocol, and in response to the determining, adjusting a number of messages sent over the plurality of data paths including decreasing a number of the messages transmitted over the first data path and increasing a number of messages transmitted over the second data path, wherein altering the flow of messages is performed automatically under control of an expert system.

**[1697]** A further embodiment of any of the foregoing embodiments of the present disclosure may include situations wherein the expert system uses at least one of a rule and a model to set a parameter of the alteration of the flow.

**[1698]** A further embodiment of any of the foregoing embodiments of the present disclosure may include situations wherein the expert system is a machine learning system that iteratively configures at least one of a set of inputs, a set of weights, and a set of functions based on feedback relating to at least one of the data paths.

**[1699]** A further embodiment of any of the foregoing embodiments of the present disclosure may include situations wherein the expert system takes a plurality of inputs from a data collector that accepts data about a machine operating in an industrial environment.

**[1700]** A further embodiment of any of the foregoing embodiments of the present disclosure may include situations wherein the first communication protocol is User Datagram Protocol (UDP).

**[1701]** A further embodiment of any of the foregoing embodiments of the present disclosure may include situations wherein the second communication protocol is Transmission Control Protocol (TCP).

**[1702]** A further embodiment of any of the foregoing embodiments of the present disclosure may include situations wherein the messages are initially divided across the first data path and the second data path using a load balancing technique.

**[1703]** A further embodiment of any of the foregoing embodiments of the present disclosure may include situations wherein the messages are initially divided across the first data path and the second data path according to a division of the messages across the first data path and the second data path in one or more prior data communication connections.

**[1704]** A further embodiment of any of the foregoing embodiments of the present disclosure may include situations wherein the messages are initially divided across the first data path and the second data path based on a probability that the first data path will alter a flow of messages over the first data path due to the messages being transmitted using the first communication protocol.

**[1705]** A further embodiment of any of the foregoing embodiments of the present disclosure may include situations wherein the probability is determined by an expert system.

**[1706]** As described in US patent application 2017/0012884, entitled "Message reordering timers," self-organized network coding under control of an expert system may involve methods and systems for data communication from a first node to a second node over a data channel coupling the first node and the second node and may include receiving

data messages at the second node, the messages belonging to a set of data messages transmitted in a sequential order from the first node, sending feedback messages from the second node to the first node, the feedback messages characterizing a delivery status of the set of data messages at the second node, including maintaining a set of one or more timers according to occurrences of a number of delivery order events, the maintaining including modifying a status of one or more timers of the set of timers based on occurrences of the number of delivery order events, and deferring sending of said feedback messages until expiry of one or more of the set of one or more timers. The data channels may be among devices and systems in an industrial environment, such as instrumentation systems of industrial machines, one or more mobile data collectors (optionally coordinated in a swarm), data storage systems (including network-attached storage), servers and other information technology elements, any of which may have or be associated with one or more network nodes. The data channels may be among any such devices and systems and devices and systems in a network of any kind (such as switches, routers, and the like) or between those and ones located in a remote environment, such as in an enterprise's information technology system, in a cloud platform, or the like. Determination that that timers are required, configuration of timers, and initiation of the user of timers may occur under control of an expert system, such as a rule-based system, a model-based system, a machine learning system (including deep learning) or a hybrid of any of those, where the expert system takes inputs relating to one or more of the types of communications occurring, the data channels, the nodes, the communication protocols used, or the like.

**[1707]** The set of one or more timers may include a first timer and the first timer may be started upon detection of a first delivery order event, the first delivery order event being associated with receipt of a first data message associated with a first position in the sequential order prior to receipt of one or more missing messages associated with positions preceding the first position in the sequential order. The method may include sending the feedback messages indicating a successful delivery of the set of data messages at the second node upon detection of a second delivery order event, the second delivery order event being associated with receipt of the one or more missing messages prior to expiry of the first timer. The method may include sending said feedback messages indicating an unsuccessful delivery of the set of data messages at the second node upon expiry of the first timer prior to any of the one or more missing messages being received. The set of one or more timers may include a second timer and the second timer is started upon detection of a second delivery order event, the second delivery order event being associated with receipt of some but not all of the missing messages prior to expiry of the first timer. The method may include sending feedback messages indicating an unsuccessful delivery of the set of data messages at the second node upon expiry of the second timer prior to receipt of the missing messages. The method may include sending feedback messages indicating a successful delivery of the set of data messages at the second node upon detection of a third delivery order event, the third delivery order event being associated with receipt of the missing messages prior to expiry of the second timer.

**[1708]** In another general aspect, a method for data communication from a first node to a second node over a data channel coupling the first node and the second node includes receiving, at the first node, feedback messages indicative of a delivery status of a set of data messages transmitted in a sequential order to the second node from the second node, maintaining a size of a congestion window at the first node including maintaining a set of one or more timers according to occurrences of a number of feedback events, the maintaining including modifying a status of one or more timers of the set of timers based on occurrences of the number of feedback events, and delaying modification of the size of the congestion window until expiry of one or more of the set of one or more timers.

**[1709]** The set of one or more timers may include a first timer and the first timer may be started upon detection of a first feedback event, the first feedback event being associated with receipt of a first feedback message indicating successful delivery of a first data message having first position in the sequential order prior to receipt of one or more feedback messages indicating successful delivery of one or more other data messages having positions preceding the first position in the sequential order. The method may include cancelling modification of the congestion window upon detection of a second feedback event, the second feedback event being associated with receipt of one or more feedback messages indicating successful delivery of the one or more other data messages prior to expiry of the first timer. The method may include modifying the congestion window upon expiry of the first timer prior to receipt of any feedback message indicating successful delivery of the one or more other data messages.

**[1710]** The set of one or more timers may include a second timer and the second timer may be started upon detection of a third feedback event, the third feedback event being associated with receipt of one or more feedback messages indicating successful delivery of some but not all of the one or more other data messages prior to expiry of the first timer. The method may include modifying the size of the congestion window upon expiry of the second timer prior to receipt of one or more feedback messages indicating successful delivery of the one or more other data messages. The method may include cancelling modification of the size of the congestion window upon detection of a fourth feedback event, the fourth feedback event being associated with receipt one or more feedback messages indicating successful delivery of the one or more other data messages prior to expiry of the second timer.

**[1711]** In another general aspect, a system for data communication between a number of nodes over a data channel coupling the number of nodes includes a first node of the number of nodes configured to receive, at the first node, feedback messages indicative of a delivery status of a set of data messages transmitted in a sequential order to the second node from the second node, maintain a size of a congestion window at the first node including maintaining a set of one or more timers according to occurrences of a number of feedback events, the maintaining including modifying a status of one or more timers of the set of timers based on occurrences of the number of feedback events, and delaying modification of the size of the congestion window until expiry of one or more of the set of one or more timers.

**[1712]** The present disclosure describes a method for data communication from a first node to a second node over a data channel coupling the first node and the second node, the method according to one disclosed non-limiting embodi-

ment of the present disclosure can include determining, using an expert system, based on at least one condition of the data channel, whether one or more timers will be used to manage the data communication and, upon such determination receiving data messages at the second node, the messages belonging to a set of data messages transmitted in a sequential order from the first node, sending feedback messages from the second node to the first node, the feedback messages characterizing a delivery status of the set of data messages at the second node, including maintaining a set of one or more timers according to occurrences of a plurality of delivery order events, the maintaining including modifying a status of one or more timers of the set of timers based on occurrences of the plurality of delivery order events, and deferring sending of said feedback messages until expiry of one or more of the set of one or more timers.

**[1713]** A further embodiment of any of the foregoing embodiments of the present disclosure may include situations wherein the expert system uses at least one of a rule and a model to set a parameter of the determination whether to use one or more timers.

**[1714]** A further embodiment of any of the foregoing embodiments of the present disclosure may include situations wherein the expert system is a machine learning system that iteratively configures at least one of a set of inputs, a set of weights, and a set of functions based on feedback relating to at least one of the data paths.

**[1715]** A further embodiment of any of the foregoing embodiments of the present disclosure may include situations wherein the expert system takes a plurality of inputs from a data collector that accepts data about a machine operating in an industrial environment.

**[1716]** A further embodiment of any of the foregoing embodiments of the present disclosure may include situations wherein the set of one or more timers includes a first timer and the first timer is started upon detection of a first delivery order event, the first delivery order event being associated with receipt of a first data message associated with a first position in the sequential order prior to receipt of one or more missing messages associated with positions preceding the first position in the sequential order.

**[1717]** As described in US patent application 2017/0012885, entitled, "Network Communication Recoding Node," self-organized network coding under control of an expert system may involve methods and systems for modifying redundancy information associated with encoded data passing from a first node to a second node over data paths and may include receiving first encoded data including first redundancy information at an intermediate node from the first node via a first channel connecting the first node and the intermediate node, the first channel having first channel characteristics, and transmitting second encoded data including second redundancy information from the intermediate node to the second node via a second channel connecting the intermediate node and the second node, the second channel having second channel characteristics. A degree of redundancy associated with the second redundancy information may be determined by modifying the first redundancy information based on one or both of the first channel characteristics and the second channel characteristics without decoding the first encoded data. The data paths may be among devices and systems in an industrial environment (each acting as one or more nodes for sending, receiving, or transmitting data), such as instrumentation systems of industrial machines, one or more mobile data collectors (optionally coordinated in a swarm), data storage systems (including network-attached storage), servers and other information technology elements, any of which may have or be associated with one or more network nodes. The data paths may be among any such devices and systems and devices and systems in a network of any kind (such as switches, routers, and the like) or between those and ones located in a remote environment, such as in an enterprise's information technology system, in a cloud platform, or the like. Modifying the redundancy information may occur by or under control of an expert system, such as a rule-based system, a model-based system, a machine learning system (including deep learning) or a hybrid of any of those, where the expert system takes inputs relating to one or more of the data paths, the nodes, the communication protocols used, or the like. Redundancy may result from (and may be identified at least in part based on), the combination or multiplexing of data from a set of data inputs, such as described throughout this disclosure.

**[1718]** Modifying the first redundancy information may include adding redundancy information to the first redundancy information. Modifying the first redundancy information may include removing redundancy information from the first redundancy information. The second redundancy information may be further formed by modifying the first redundancy information based on feedback from the second node indicative of successful or unsuccessful delivery of the encoded data to the second node. The first encoded data and the second encoded data may be encoded, such as using a random linear network code or a substantially random linear network code. Modifying the first redundancy information based on one or both of the first channel characteristics and the second channel characteristics may include modifying the first redundancy information based on one or more of a block size, a congestion window size, and a pacing rate associated with the first channel characteristics and/or the second channel characteristics.

**[1719]** The method may include sending a feedback message from the intermediate node to the first node acknowledging receipt of one or more messages at the intermediate node. The method may include receiving a feedback message from the second node at the intermediate node and, in response to receiving the feedback message, transmitting additional redundancy information to the second node.

**[1720]** In another general aspect, a system for modifying redundancy information associated with encoded data passing from a first node to a second node over a number of data paths includes an intermediate node configured to receive first encoded data including first redundancy information from the first node via a first channel connecting the first node and the intermediate node, the first channel having first channel characteristics and transmit second encoded data including second redundancy information from the intermediate node to the second node via a second channel connecting the intermediate node and the second node, the second channel having second channel characteristics. A degree of redundancy associated with the second redundancy information is determined by modifying the first redundancy information based on one or both of the first channel characteristics and the second channel characteristics without decoding the first encoded data.

**[1721]** The present disclosure describes a method for modifying redundancy information associated with encoded

data passing from a first node to a second node over a plurality of data paths, the method according to one disclosed non-limiting embodiment of the present disclosure can include receiving first encoded data including first redundancy information at an intermediate node from the first node via a first channel connecting the first node and the intermediate node, the first channel having first channel characteristics, transmitting second encoded data including second redundancy information from the intermediate node to the second node via a second channel connecting the intermediate node and the second node, the second channel having second channel characteristics, wherein a degree of redundancy associated with the second redundancy information is determined by modifying the first redundancy information based on one or both of the first channel characteristics and the second channel characteristics without decoding the first encoded data, including modifying the first redundancy information based on one or more of a block size, a congestion window size, and a pacing rate associated with the first channel characteristics and/or the second channel characteristics, wherein modifying the first redundancy information occurs under control of an expert system.

**[1722]** A further embodiment of any of the foregoing embodiments of the present disclosure may include situations wherein the expert system uses at least one of a rule and a model to set a parameter of the modification of the redundancy information.

**[1723]** A further embodiment of any of the foregoing embodiments of the present disclosure may include situations wherein the expert system is a machine learning system that iteratively configures at least one of a set of inputs, a set of weights, and a set of functions based on feedback relating to at least one of the data paths.

**[1724]** A further embodiment of any of the foregoing embodiments of the present disclosure may include situations wherein the expert system takes a plurality of inputs from a data collector that accepts data about a machine operating in an industrial environment.

**[1725]** A further embodiment of any of the foregoing embodiments of the present disclosure may include situations wherein modifying the first redundancy information includes adding redundancy information to the first redundancy information.

**[1726]** A further embodiment of any of the foregoing embodiments of the present disclosure may include situations wherein modifying the first redundancy information includes removing redundancy information from the first redundancy information.

**[1727]** A further embodiment of any of the foregoing embodiments of the present disclosure may include situations wherein the second redundancy information is further formed by modifying the first redundancy information based on feedback from the second node indicative of successful or unsuccessful delivery of the encoded data to the second node.

**[1728]** A further embodiment of any of the foregoing embodiments of the present disclosure may include situations wherein the first encoded data and the second encoded data are encoded using a random linear network code.

**[1729]** As described in US patent application 2017/0012905, entitled "Error correction optimization," self-organized network coding under control of an expert system may involve methods and systems for data communication between a first node and a second node over a data path coupling the first node and the second node and may include transmitting a segment of data from the first node to the second node over the data path as a number of messages, the number of messages being transmitted according to a transmission order. A degree of redundancy associated with each message of the number of messages is determined based on a position of said message in the transmission order. The data paths may be among devices and systems in an industrial environment (each acting as one or more nodes for sending, receiving, or transmitting data), such as instrumentation systems of industrial machines, one or more mobile data collectors (optionally coordinated in a swarm), data storage systems (including network-attached storage), servers and other information technology elements, any of which may have or be associated with one or more network nodes. The data paths may be among any such devices and systems and devices and systems in a network of any kind (such as switches, routers, and the like) or between those and ones located in a remote environment, such as in an enterprise's information technology system, in a cloud platform, or the like. Determining a transmission order may occur by or under control of an expert system, such as a rule-based system, a model-based system, a machine learning system (including deep learning) or a hybrid of any of those, where the expert system takes inputs relating to one or more of the data paths, the nodes, the communication protocols used, or the like. Redundancy may result from (and may be identified at least in part based on), the combination or multiplexing of data from a set of data inputs, such as described throughout this disclosure.

**[1730]** The degree of redundancy associated with each message of the number of messages may increase as the position of the message in the transmission order is non-decreasing. Determining the degree of redundancy associated with each message of the number of messages based on the position (i) of the message in the transmission order is further based on one or more of delay requirements for an application at the second node, a round trip time associated with the data path, a smoothed loss rate (P) associated with the channel, a size (N) of the data associated with the number of messages, a number (ai) of acknowledgement messages received from the second node corresponding to messages from the number of messages, a number (fi) of in-flight messages of the number of messages, and an increasing function (g(i)) based on the index of the data associated with the number of messages.

**[1731]** The degree of redundancy associated with each message of the number of messages may be defined as: $(N+g(i)-ai)/(1-p)-fi$. g(i) may be defined as a maximum of a parameter m and N−i. g(i) may be defined as N−p(i) where p is a polynomial, with integer rounding as needed. The method may include receiving, at the first node, a feedback message from the second node indicating a missing message at the second node and, in response to receiving the feedback message, sending a redundancy message to the second node to increase a degree of redundancy associated with the missing message. The method may include maintaining, at the first node, a queue of preemptively computed redundancy messages and, in response to receiving the feedback message, removing some or all of the preemptively computed redundancy messages from the queue and adding the redundancy message to the queue for transmission. The

redundancy message may be generated and sent on-the-fly in response to receipt of the feedback message.

**[1732]** The method may include maintaining, at the first node, a queue of preemptively computed redundancy messages for the number of messages and, in response to receiving a feedback message indicating successful delivery of the number of messages, removing any preemptively computed redundancy messages associated with the number of messages from the queue of preemptively computed redundancy messages. The degree of redundancy associated with each of the messages may characterize a probability of correctability of an erasure of the message. The probability of correctability may depend on a comparison of between the degree of redundancy and a loss probability.

**[1733]** The present disclosure describes a method for data communication between a first node and a second node over a data path coupling the first node and the second nod, the method according to one disclosed non-limiting embodiment of the present disclosure can include transmitting a segment of data from the first node to the second node over the data path as a plurality of messages, the plurality of messages being transmitted according to a transmission order, wherein a degree of redundancy associated with each message of the plurality of messages is determined based on a position of said message in the transmission order, wherein the transmission order is determined under control of an expert system.

**[1734]** A further embodiment of any of the foregoing embodiments of the present disclosure may include situations wherein the expert system uses at least one of a rule and a model to set a parameter of the transmission order.

**[1735]** A further embodiment of any of the foregoing embodiments of the present disclosure may include situations wherein the expert system is a machine learning system that iteratively configures at least one of a set of inputs, a set of weights, and a set of functions based on feedback relating to at least one of the data paths.

**[1736]** A further embodiment of any of the foregoing embodiments of the present disclosure may include situations wherein the expert system takes a plurality of inputs from a data collector that accepts data about a machine operating in an industrial environment.

**[1737]** A further embodiment of any of the foregoing embodiments of the present disclosure may include situations wherein the degree of redundancy associated with each message of the plurality of messages increases as the position of the message in the transmission order is non-decreasing.

**[1738]** A further embodiment of any of the foregoing embodiments of the present disclosure may include situations wherein determining the degree of redundancy associated with each message of the plurality of messages based on the position (i) of the message in the transmission order is further based on one or more of application delay requirements, a round trip time associated with the data path, a smoothed loss rate (P) associated with the channel, a size (N) of the data associated with the plurality of messages, a number (ai) of acknowledgement messages received from the second node corresponding to messages from the plurality of messages, a number (fi) of in-flight messages of the plurality of messages, and an increasing function (g(i)) based on the index of the data associated with the plurality of messages.

**[1739]** As described in U.S. patent application Ser. No. 14/935,885, entitled, "Packet Coding Based Network Communication," self-organized network coding under control of an expert system may involve methods and systems for data communication between a first node and a second node over a path and may include estimating a rate at which loss events occur, where a loss event is either an unsuccessful delivery of a single packet to the second data node or an unsuccessful delivery of a plurality of consecutively transmitted packets to the second data node, and sending redundancy messages at the estimated rate at which loss events occur. An expert system may be used to estimate the rate at which loss events occur.

**[1740]** A method for data communication from a first node to a second node over a data channel coupling the first node and the second node such as in an industrial environment, includes receiving messages at the first node, from the second node, including receiving messages comprising data that depend at least in part of characteristics of the channel coupling the first node and the second node, transmitting messages from the first node to the second node, including applying forward error correction according to parameters determined from the received messages, the parameters determined from the received messages including at least two of a block size, an interleaving factor, and a code rate. The method may occur under control of an expert system.

**[1741]** The present disclosure describes a method for data communication from a first node in an industrial environment to a second node over a data channel coupling the first node and the second node, the method according to one disclosed non-limiting embodiment of the present disclosure can include receiving messages at the first node from the second node, including receiving messages including data that depend at least in part of characteristics of the channel coupling the first node and the second node, transmitting messages from the first node to the second node, including applying error correction according to parameters determined from the received messages, the parameters determined from the received messages including at least two of a block size, an interleaving factor, and a code rate, wherein applying the error correction occurs under control of an expert system.

**[1742]** A further embodiment of any of the foregoing embodiments of the present disclosure may include situations wherein the expert system uses at least one of a rule and a model to set a parameter of the error correction.

**[1743]** A further embodiment of any of the foregoing embodiments of the present disclosure may include situations wherein the expert system is a machine learning system that iteratively configures at least one of a set of inputs, a set of weights, and a set of functions based on feedback relating to at least one of the data paths.

**[1744]** As depicted in FIG. **180**, a cloud platform for supporting deployments of devices in the Internet of Things (IoT), such as within industrial environments, may include various components, modules, services, elements, applications, interfaces, and other elements (collectively referred to as the "cloud platform **13000**"), which may include a policy automation engine **13002** and a data marketplace **13008**. The cloud platform **13000** may include, integrate with, or connect to various devices **13006**, a cloud computing environment **13068**, data pools **13070**, data collectors **13020** and sensors **13024**. The cloud platform **13000** may also include

systems and capabilities for self-organization **13012**, machine learning **13014** and rights management **13016**.

**[1745]** Within the cloud platform **13000**, various components may be deployed in a wide range of architectures and arrangements. In embodiments, devices **13006** may connect to, integrate with, or be deployed within a cloud computing environment **13068**, the policy automation engine **13002**, the data marketplace **13008**, the data collectors **13020**, as well as systems and capabilities for self-organization **13012**, machine learning **13014** and rights management **13016**. Devices **13006** may connect to or integrate with the policy automation engine **13002**, data marketplace **13008**, data collectors **13020** and systems or capabilities for self-organization **13012**, machine learning **13014** and rights management **13016**, either directly or through the cloud computing environment **13068**.

**[1746]** Devices **13006** may be IoT devices, including IoT devices, such as for collecting, exchanging and managing information relating to machines, personnel, equipment, infrastructure elements, components, parts, inventory, assets, and other features of a wide range of industrial environments, such as those described throughout this disclosure. Devices **13006** may also connect via various protocols **13004**, such as networking protocols, streaming protocols, file transfer protocols, data transformation protocols, software operating system protocols, and the like. Devices may connect to the policy automation engine **13002**, such as for executing policies that may be deployed within the cloud platform **13000**, such as governing activities, permissions, rules, and the like within the platform **13000**. Devices **13006** may also connect to data streams **13010** within the data marketplace **13008**.

**[1747]** Data pools **13070** may connect to or integrate with the cloud computing environment **13068**, data collectors **13020** and the data marketplace **13008**, policy automation engine **13002**, self-organization **13012**, machine learning **13014** and rights management **13016** capabilities. Data pools **13070** may be included within the cloud computing environment **30** or be external to the cloud computing environment **13068**. As a result, connections to the data pools **13070** may be made directly to the data pools **13070**, through cloud connections to the data pools **13070** or through a combination of direct and cloud connections to the data pools **13070**. Data pools **13070** may also be included within the data marketplace **13008** or external to the data marketplace **13008**.

**[1748]** Data pools **13070** may include a multiplexer (MUX) **13022** and also connect to self-organization **13012**, machine learning **13014** and rights management capabilities. The MUX **13022** may connect to sensors **13024**, collect data from sensors **13024** and integrate data collected from sensors **13024** into a single set of data. In an exemplary and non-limiting embodiment, data pools **13070**, data collectors **13020** and sensors **13024** may be included within an industrial environment **13018**.

**[1749]** A policy automation engine **13002** and data marketplace **13008** may be used in a variety of industrial environments **13018**. Industrial environments **13018** may include aerospace environments, agriculture environment, assembly line environments, automotive environments, and chemical and pharmaceutical environments. Industrial environments **13018** may also include food processing environments, industrial component environments, mining environments, oil and gas environments, particularly oil and gas production environments, truck and car environments and the like.

**[1750]** Similarly, devices **13006** may include a variety of devices that may operate within the industrial environments or that may collect data with respect to other such devices. Among many examples, devices **13006** may include agitators, including turbine agitators, airframe control surface vibration devices, catalytic reactors and compressors. Devices **13006** may also include conveyors and lifters, disposal systems, drive trains, fans, irrigation systems and motors. Devices **13006** may also include pipelines, electric powertrains, production platforms, pumps, such as water pumps, robotic assembly systems, thermic heating systems, tracks, transmission systems and turbines. Devices **13006** may operate within a single industrial environment **13018** or multiple industrial environments **13018**. For example, a pipeline device may operate within an oil and gas environment, while a catalytic reactor may operate in either an oil and gas production environment or a pharmaceutical environment.

**[1751]** The policy automation engine **13002** may be a cloud-based policy automation engine **13002**. A policy automation engine **13002** may be used to create, deploy, and/or manage an interconnected set of policies **13030**, rules **13028** and protocols **13004**, such as policies relating to security, authorization, permissions, and the like. For example, policies may govern what users, applications, services, systems, devices, or the like may access an IoT device, may read data from an IoT device, may subscribe to a stream from an IoT device, may write data to an IoT device, may establish a network connection with an IoT device, may provision an IoT device, may collaborate with an IoT device, or the like.

**[1752]** The policy automation engine **13002** may generate and manage policies **13030**. The policy generation engine may be the centralized policy management system for the cloud platform **13000**.

**[1753]** Policies **13030** generated and managed by the policy automation engine **13002** may deploy a large number of rules **13028** to permit access to and use of different aspects of IoT devices. Policies **13030** may include IoT device creation policies **13032**, IoT device deployment policies **13034**, IoT device management policies **13036** and the like. The policies **13030** may be communicated to devices **13006** through protocols **13004** or directly from the policy automation engine **13002**.

**[1754]** For example, in an exemplary and non-limiting embodiment, the policy automation engine **13002** may manage policies **13030** and create protocols **13004** that specify and enforce roles **13026** and permissions **13074** for workers, related to how the workers may use data provided by IoT devices. Workers may be human workers or machine workers.

**[1755]** In additional exemplary and non-limiting embodiments, policies **13030** may be used to automate remediation processes. Remediation processes may be performed when a system is partially disabled, when equipment fails and when an entire system may be disabled. Remediation processes may include instructions to initiate system restarts, bypass or replace equipment, notify appropriate stakeholders of the condition and the like. The policy automation engine **13002** may also include policies **13030** that specify

the roles **13026** and permissions **13074** required for users **13072** to initiate or otherwise act upon the remediation or other processes.

**[1756]** The policy automation engine **13002** may also specify and detect conditions. Conditions may determine when policies **13030** are distributed or otherwise acted upon. Conditions may include individual conditions, sets of conditions, independent conditions, interdependent conditions, and the like.

**[1757]** In an exemplary and non-limiting embodiment of an independent condition, the policy automation engine **13002** may determine that the failure of a non-critical device **13006** does not require notification of the system operator. In an exemplary and non-limiting embodiment of an interdependent set of conditions, the policy automation engine **13002** may determine that the failure of two non-critical system devices **13006** does require notification of the system operator, as the failure of two non-critical system devices **13006** may be an early indicator of a possible system-wide failure.

**[1758]** As depicted in FIG. **181**, the policy automation engine **13002** may include compliance policies **13050** and fault, configuration, accounting, provisioning, and security (FCAPS) policies **13052**. Policies **13030** may connect to rules **13028**, protocols **13004** and policy inputs **13048**.

**[1759]** Policies **13030** may provide input to rules **13028** and provide information related to how roles **13026**, permissions **13074** and uses **130280** are defined. Policies **13030** may receive policy inputs **13048** and incorporate policy inputs **13048** as policy parameters that are included within policies **13030**. Policies **13030** may provide inputs to protocols **13004** and be included within protocols **13004** that are used to create, deploy and manage devices **13006**.

**[1760]** Compliance policies **13050** may include data ownership policies, data analysis policies, data use policies, data format policies, data transmission policies, data security policies, data privacy policies, information sharing policies, jurisdictional policies, and the like. Data transmission policies may include cross jurisdictional data transmission policies.

**[1761]** Data ownership policies may indicate policies **13030** that manage who controls data, who can use data, how the data can be used and the like. Data analysis policies may indicate what data holders can do with data that they are permitted to access, as well as determine what data they can look at and what data may be combined with other data. For example, a data holder may look at aggregated user data but not individual user data. Data use policies may indicate how data may be used and under what circumstances data may be used. Data format policies may indicate standard formats and mandated formats permitted for the handling of data. Data transmission policies, including cross jurisdictional data transmission policies, may determine the policies **13030** that specify how inter-jurisdictional and intra-jurisdictional transmission of data may be handled Data security policies may determine how data at rest, for example stored data, as well transmitted data is required to be secured.

**[1762]** Data privacy policies may determine how data may or may not be shared, for example within an organization and external to an organization Information sharing policies may determine how data may be sold, shared and under what circumstances information can be sold and shared. Jurisdictional policies may determine who controls data, when and where the data may be controlled, for data within and transmitted across boundaries.

**[1763]** FCAPS policies **13052** may include fault management policies, configuration management policies, accounting management policies, provisioning management policies, and security management policies. Fault management policies may specify policies **13030** used to handle device faults. Configuration management policies may specify policies used to configure devices **13006**. Accounting management policies may specify policies **13030** used for device accounting purposes, such as reporting, billing and the like. Provisioning management policies may specify policies **13030** used to provision services on devices **13006**. Security management policies may specify policies **13030** used to secure devices **13006**.

**[1764]** Policy inputs **13048** may be received from a policy input interface **13046**. Policy inputs **13048** may include standards-based policy inputs **13044** and other policy inputs **13048**. Standards-based policy inputs **13044** may include inputs related to standard data formats, standard rule sets and other standards-related information set by standards bodies, for example.

**[1765]** Other policy inputs **13048** may include a wide range of information related industry-specific policies, cross-industry policies, manufacturer-specific policies, device-specific policies **13030** and the like. Policy inputs **13048** may connect to a cloud computing environment **13068** and be provided through a policy input interface **13046**. The policy input interface **13046** may collect policy inputs **13048** provided by machines or entered by human operators.

**[1766]** As depicted in FIG. **180**, a data marketplace **13008** may include data streams **13010**, a data marketplace input interface, data marketplace inputs **13056**, a data payment allocation engine **13038**, marketplace value rating engine **13040**, a data brokering engine **13042**, a marketplace self-organization engine **13076** and one or more data pools **13070**. The data marketplace **13008** may be included within the cloud networking environment **30** or externally connected to the cloud networking environment **13068**. Data pools **13070** may also be included within the cloud networking environment **13068** or may be externally connected to the cloud networking environment **13068**.

**[1767]** The data marketplace **13008** may connect to data pools **13070** directly, for example if the data marketplace **13008** and data pools **13070** are located in the same physical location. The data marketplace **13008** may connect to data pools **13070** via a cloud networking environment **30**, for example if the data marketplace **13008** and data pools **13070** are located in different physical locations.

**[1768]** The data marketplace **13008** may connect to and receive inputs. The data marketplace **13008** may receive marketplace inputs through data interfaces, for example one or more data collectors **13020**. The data collectors **13020** may be multiplexing data collectors. Inputs received through the data collectors **13020** may be received as one or more than one data streams **13010** from one or more than one data collectors **13020** and integrated into additional data streams **13010** by the multiplexer (MUX) **13022**.

**[1769]** The data streams **13010** may also include data from the data pools **60**. Data marketplace inputs, data streams **13010** and data pools **13070** may include metrics and measures of success of the data marketplace **13008**. The metrics and measures of success of the data marketplace

**13008** may then be used by the machine learning capability **13014** to configure one or more parameters of the data marketplace **13008**.

**[1770]** Inputs may be consortia inputs **13054**. Consortia inputs **13054** may be received from consortia. Consortia may include energy consortia, healthcare consortia, manufacturing consortia, smart city consortia, transportation consortia and the like. Consortia may be pre-existing consortia or new consortia.

**[1771]** In an exemplary and non-limiting embodiment, new consortia may be formed as a result of the data marketplace **13008** making available particular data types and data combinations. The data brokering engine **13042** may allow consortia members to trade information. The data brokering engine **13042** may allow consortia members to trade information based on information value, as calculated by the marketplace value rating engine **13040**, for example.

**[1772]** The data marketplace **13008** may also connect to self-organization **13012**, machine learning **13014** and rights management **13016** capabilities. Rights management capabilities **13016** may include rights.

**[1773]** Rights may include business strategy and solution rights, liaison rights **13058**, marketing rights **13078**, security rights **13060**, technology rights **13062**, testbed rights **13064** and the like. Business strategy and solution lifecycle rights may include business strategy and planning rights, industrial internet system design rights, project management rights, solution evaluation and contractual aspects rights. Liaison rights **13058** may include standards organization rights, open-source community rights, certification and testing body rights and governmental organization rights. Marketing rights **13078** may include communication rights, energy rights, healthcare rights, marketing-security rights, retail operation rights, smart factory rights and thought leadership rights. Security rights **13060** may include driving rights that drive industry consensus, promote security best practices and accelerate the adoption of security best practices.

**[1774]** Technology rights **13062** may include architecture rights, connectivity rights, distributed data management and interoperability rights, industrial analytics rights, innovation rights, IT/OT rights, safety rights, vocabulary rights, use case rights and liaison rights **13058**. Testbed rights **13064** may include rights to implement of specific use cases and scenarios, as well as rights to produce testable outcomes to confirm that an implementation conforms to expected results, for example. Testbed rights **13064** may also include rights to explore untested or existing technologies working together, for example interoperability testing, generate new and potentially disruptive products and services and generate requirements and priorities for standards organizations, consortia and other stakeholder groups.

**[1775]** The rights management capability may assign different rights to different participants in the data marketplace **13008**. In an exemplary and non-limiting embodiment, manufacturers or remote maintenance organizations (RMOs). Participants may be assigned rights to information based on their equipment or proprietary methods. The data marketplace **13008** may then ensure that only the appropriate data streams **13010** are made available to the market, based on the assigned rights.

**[1776]** The rights management capability **13016** may manage permissions to access the data in the marketplace **13008**. One or more parameters of the rights management capability **13016** may be automatically configured by the machine learning capability **13014** and may be based on a metric of success of the data marketplace **13008**. The machine learning engine **13014** may also use the metric and measure of success to configure a user interface. The user interface may present a data element of the user of the data marketplace **13008**. The user interface may also present one or more mechanisms by which a user of the data marketplace **13008** may obtain access to one or more of the data elements.

**[1777]** The data payment allocation engine **13038** may allocate data marketplace payments. The data payment allocation engine **13038** may allocate data marketplace payments according to the value of a data stream **13010**, the value of a contribution to a data stream **13010** and the like. This type of payment allocation may allow the data marketplace **13008** to allocate payments to data contributors, based on the value of the data contributions.

**[1778]** For example, contributors of data to a higher-value data stream **13010** may receive higher payments than contributors of data to lower-value data streams **13010**. Similarly, data marketplace participants, for example IoT device manufacturers and system integrators, may be rated or ranked by the value of the data or the power of the configurations they provide and support.

**[1779]** The data marketplace **13008** may be a self-organizing data marketplace. A self-organizing data marketplace may self-organize using self-organization capabilities **13012**. Self-organization capabilities **13012** may be learned, developed and optimized using artificial intelligence (AI) capabilities. AI capabilities may be provided by the machine learning **13014** capability, for example. Self-organization may occur via an expert system and may be based on the application of a model, one or more rules, or the like. Self-organization may occur via a neural network or deep learning system, such as by optimizing variations of the organization of the data pool over time based on feedback to one or more measures of success. Self-organization may occur by a hybrid or combination of a rule-based system, model-based system, and neural network or other AI system. Various capabilities may be self-organized, such as how data elements are presented in the user interface of the marketplace, what data elements are presented, what data streams are obtained as inputs to the marketplace, how data elements are described, what metadata is provided with data elements, how data elements are stored (such as in a cache or other "hot" storage or in slower, but less expensive storage locations), where data elements are stored (such as in edge elements of a network), how data elements are combined, fused or multiplexed, or the like. Feedback to self-organization may include various metrics and measures of success, such as profit measures, yield measures, ratings (such as by users, purchasers, licensees, reviewers, and the like), indicators of interest (such as clickstream activity, time spent on a page, time spent reviewing elements and links to data elements), and others as described throughout this disclosure.

**[1780]** Data marketplace inputs **13056**, data streams **13010** and data pools **13070** may be organized, based on metrics and measures of success of the data marketplace **13056**. Data marketplace inputs **13056**, data streams **13010** and data pools **13070** may be organized by the self-organization capability **13012**, allowing the marketplace inputs **13056**, data streams **13010**, and data pools **60** to be orga-

nized automatically, without requiring interaction by a user of the data marketplace. **13008**.

**[1781]** The metric and measure of success may also be used to configure the data brokering engine **13042** to execute a transaction among at least two marketplace participants. The machine learning engine **13014** may use the metric of success to configure the data brokering engine **13042** automatically, without requiring user intervention. The metric of success may also be used by a pricing engine, for example the marketplace value rating engine **13040**, to set the price of one or more data elements within the data marketplace **13008**.

**[1782]** In an exemplary and non-limiting embodiment, the self-organizing data marketplace may self-organize to determine which type of data streams **13010** are the most valuable and offer the most valuable and other data streams **13010** for sale. The calculation of data stream value may be performed by the marketplace value rating engine **13040**.

**[1783]** In embodiments, a policy automation system for a data collection system in an industrial environment may comprise: a policy input interface structured to receive policy inputs relating to definition of at least one parameter of at least one of a rule, a policy and a protocol, wherein the at least one parameter defines at least one of a configuration for a data collection device, an access policy for accessing data from the data collection device, and collection policy for collection of data by the device; and a policy automation engine for taking the inputs and automatically configuring and deploying at least one of the rule, the policy and the protocol within the system for data collection. In embodiments, the at least one parameter may define at least one of an energy utilization policy, a cost-based policy, a data writing policy, and a data storage policy. The parameter may relate to a policy selected from among compliance, fault, configuration, accounting, provisioning and security policies for defining how devices are created, deployed and managed. The compliance policies may include data ownership policies. The data ownership policies may specify who owns data. The data ownership policies may specify how owners may use data. The compliance policies may include data analysis policies. The data analysis policies may specify what data holders may access, how data holders may use data, and how data may be combined with other data by data holders. The compliance policies may include data use policies, data format policies, and the like. The data format policies may include standard data format policies, mandated data format policies. The compliance policies may include data transmission policies. The data transmission policies may include inter-jurisdictional transmission data transmission policies. The compliance policies may include data security policies, data privacy policies, information sharing policies, and the like. The data security policies may include at rest data security policies, transmitted data security policies, and the like. The information sharing policies may include policies specifying when information may be sold, when information may be shared, and the like. The compliance policies may include jurisdictional policies. The jurisdictional policies may include policies specifying who controls data. The jurisdictional policies may include policies specifying when data may be controlled. The jurisdictional policies may include policies specifying how data transmitted across boundaries is controlled.

**[1784]** In embodiments, a policy automation system for a data collection system in an industrial environment may comprise: a policy automation engine for enabling configuration of a plurality of policies applicable to collection and utilization of data handled by a plurality of network connected devices deployed in a plurality of industrial environments, wherein the policy automation engine is hosted on information technology infrastructure elements that are located separately from the industrial environment, wherein upon configuration of a policy in the policy automation engine, the policy is automatically deployed across a plurality of devices in the plurality of industrial environments, wherein the policy sets configuration parameters relating to what data is collected by the data collection system and relating to access permissions for the collected data. The policies may include a plurality of policies selected among compliance, fault, configuration, accounting, provisioning and security policies for defining how devices are created, deployed and managed, and the plurality of policies communicatively coupled to policies. A policy input interface may be structured to receive policy inputs used as an input to at least one of a rule, policy and protocol definition, such as where the policy automation system a centralized source of policies for creating, deploying and managing policies for devices within an industrial environment.

**[1785]** In embodiments, a policy automation system for a data collection system in an industrial environment may comprise: a policy automation engine for enabling configuration of a plurality of policies applicable to collection and utilization of data handled by a plurality of network connected devices deployed in a plurality of industrial environments, wherein the policy automation engine is hosted on information technology infrastructure elements that are located separately from the industrial environment, wherein upon configuration of a policy in the policy automation engine, the policy is automatically deployed across a plurality of devices in the plurality of industrial environments, wherein the policy sets configuration parameters relating to what data is collected by the data collection system and relating to access permissions for the collected data, wherein the policy automation system is communicatively coupled to a plurality of devices through a cloud network connection. The cloud network connection may be a privately-owned cloud connection, a publicly provided cloud connection, a publicly provided cloud connection, the primary connection between the policy automation system and device, the primary connection between the policy automation system and device, an intranet cloud connection, connecting devices within a single enterprise, an extranet cloud connection, connecting devices among multiple enterprises, a secure cloud network connection, secured by a virtual private network (VPN) connection, and the like.

**[1786]** In embodiments, a data marketplace for a data collection system in an industrial environment may comprise: an input interface structured to receive marketplace inputs; at least one of a data pool and a data stream to provide collected data within the marketplace; and data streams that include data from data pools. In embodiments, at least one parameter of the marketplace may be automatically configured by a machine learning facility based on a metric of success of the marketplace. The inputs may include a plurality of data streams from a plurality of industrial data collectors. The data collectors may be multiplexing data collectors. The inputs may include consortia inputs. A consortium may be an existing consortium, a new consortium, a new consortium related to a data stream

through a common interest, and the like. The metrics and measures of success may include profit measures, yield measures, ratings, indicators of interest, and the like. The ratings may include user ratings, purchaser ratings, licensee ratings, reviewer ratings, and the like. The indicators of interest may include clickstream activity, time spent on a page, time spent reviewing elements, links to data elements, and the like.

**[1787]** In embodiments, a data marketplace for a data collection system in an industrial environment may comprise: an input system structured to receive a plurality of data inputs relating to data sensed from or about one or more industrial machines; at least one of a data pool and a data stream to provide collected data within the marketplace; and a self-organization system for organizing at least one of the data inputs and the data pools based on a metric of success of the marketplace. In embodiments, the self-organization system may optimize variations of the organization of the data pool over time. The optimized variations may be based on feedback to one or more measures of success. The self-organization system may organize how data elements are presented in the user interface of the marketplace. The self-organization system may select what data elements are presented, what data streams are obtained as inputs to the marketplace, how data elements are described, what metadata is provided with data elements, a storage method for data elements, a location within a communication network for the storage elements (such as in edge elements of a network), a data element combination method, and the like. A storage method may include a cache or other "hot" storage method. A storage method may include slower, but less expensive storage locations. The data element combination method may be a data fusion method, a data multiplexing method, and the like. The self-organization system may receive feedback data, such as where feedback data includes success metrics and measures. Success metrics and measures may include profit measures, include yield measures, ratings, indicators of interest, and the like. Ratings include ratings may be provided by users, purchasers, by licensees, reviewers. Success metrics and measures may include indicators of interest. Indicators of interest may include clickstream activity, time spent on a page activity, time spent reviewing elements, time spent reviewing elements, links to data elements, and the like. The self-organization system may determine the value of data streams. The value of data streams may determine which data streams are offered for sale by the data marketplace. The ratings may include user ratings. The ratings may include purchaser ratings, licensee ratings, reviewer ratings, and the like.

**[1788]** In embodiments, a data marketplace for a data collection system in an industrial environment may comprise: an input interface structured to receive data inputs from or about one or more of a plurality of industrial machines; at least one of a data pool and a data stream to provide collected data within the marketplace; and a rights management engine for managing permissions to access the data in the marketplace. In embodiments, at least one parameter of the rights management engine may be automatically configured by a machine learning facility based on a metric of success of the marketplace. The rights management engine may assign rights to participants of the data marketplace. The rights may include business strategy and solution rights, liaison rights, marketing rights, security rights, technology rights, testbed rights, and the like. The metrics and measures of success may include profit measures, yield measures, ratings, and the like. The ratings may include user ratings, purchaser ratings, include licensee ratings, reviewer ratings, and the like. The metrics and measures success may include indicators of interest, such as where interest includes clickstream activity, time spent on a page, time spent reviewing elements, and links to data elements.

**[1789]** In embodiments, a data marketplace for a data collection system in an industrial environment may comprise: an input interface structured to receive data inputs from or about one or more of a plurality of industrial machines; at least one of a data pool and a data stream to provide collected data within the marketplace; and a data brokering engine configured to execute a data transaction among at least two marketplace participants. In embodiments, at least one parameter of the data brokering engine may be automatically configured by a machine learning facility based on a metric of success of the marketplace. A data transaction input may include a marketplace value rating. A marketplace value rating may be assigned to a marketplace participant. A marketplace value rating may be assigned to a marketplace participant is assigned based on the value of input provided by the participant to the marketplace. A data transaction may be a trade transaction, a sale transaction, is a payment transaction, and the like. The metrics and measures of success may include profit measures, yield measures, ratings, and the like. The ratings may include user ratings. The ratings may include purchaser ratings, licensee ratings, reviewer ratings, and the like. The metrics and measures success may include indicators of interest. The indicators of interest may include clickstream activity, time spent on a page, include time spent reviewing elements, links to data elements, and the like.

**[1790]** In embodiments, a data marketplace for a data collection system in an industrial environment may comprise: an input interface structured to receive data inputs from or about one or more of a plurality of industrial machines; at least one of a data pool and a data stream to provide collected data within the marketplace; and a pricing engine for setting a price for at least one data element within the marketplace. In embodiments, pricing may be automatically configured for the pricing engine by a machine learning facility based on a metric of success of the marketplace. The metrics and measures of success may include profit measures, yield measures, include ratings, and the like. The ratings may include user ratings. The ratings may include purchaser ratings, licensee ratings, reviewer ratings, and the like. The metrics and measures success may include indicators of interest. The indicators of interest may include clickstream activity, time spent on a page, include time spent reviewing elements, links to data elements, and the like.

**[1791]** In embodiments, a data marketplace for a data collection system in an industrial environment may comprise: an input interface structured to receive data inputs from or about one or more of a plurality of industrial machines; at least one of a data pool and a data stream to provide collected data within the marketplace; and a user interface for presenting a data element and at least one mechanism by which a party using the marketplace can obtain access to the at least one data stream or data pool. In embodiments, pricing may be automatically configured for the pricing engine by a machine learning facility based on a metric of success of the marketplace. The metrics and

measures of success may include profit measures, yield measures, include ratings, and the like. The ratings may include user ratings. The ratings may include purchaser ratings, licensee ratings, reviewer ratings, and the like. The metrics and measures success may include indicators of interest. The indicators of interest may include clickstream activity, time spent on a page, include time spent reviewing elements, links to data elements, and the like.

**[1792]** In embodiments, a data collection system in an industrial environment may comprise: a policy automation system for a data collection system in an industrial environment, comprising: a plurality of rules selected among roles, permissions and uses, the plurality of rules communicatively coupled to policies, protocols, and policy inputs; a plurality of policies selected among compliance, fault, configuration, accounting, provisioning, and security policies for defining how devices are created, deployed and managed, the plurality of policies communicatively coupled to policies, protocols and policy inputs and a policy input interface structured to receive policy inputs used as an input to at least one of a rule, policy and protocol definition.

**[1793]** In embodiments, a data marketplace may comprise: an input interface structured to receive marketplace inputs; a plurality of data pools to store collected data, including marketplace inputs and make collected data available for use by the marketplace; and data streams that include data from data pools.

**[1794]** As described herein and in Appendix B attached hereto, intelligent industrial equipment and systems may be configured in various networks, including self-forming networks, private networks, Internet-based networks, and the like. One or more of the smart heating systems as described in Appendix B that may incorporate hydrogen production, storage, and use may be configured as nodes in such a network. In embodiments, a smart heating system may be configured with one or more network ports, such as a wireless network port that facilitate connection through Wi-Fi and other wired and/or wireless communication protocols as described. The smart heating system includes a smart hydrogen production system and a smart hydrogen storage system, and the like described in Appendix B and may be configured individually or as an integral system connected as one or more nodes in a network of industrial equipment and systems. By way of this example, a smart heating system may be disposed in an on-site industrial equipment operations center, such as a portable trailer equipped with communication capabilities and the like. Such deployed smart heating system may be configured, manually, automatically, or semi-automatically to join a network of devices, such as industrial data collection, control, and monitoring nodes and participate in network management, communication, data collection, data monitoring, control, and the like.

**[1795]** In another example of a smart heating system participating in a network of industrial equipment monitoring, control, and data collection devices in that a plurality of the smart heating systems may be configured into a smart heating system sub-network. In embodiments, data generated by the sub-network of devices may be communicated over the network of industrial equipment using the methods and systems described herein.

**[1796]** In embodiments, the smart heating system may participate in a network of industrial equipment as described herein. By way of this example, one or more of the smart heating systems, as depicted in FIG. **182**, may be configured as an IoT device, such as IoT device **13500** and the like described herein. In embodiments, the smart heating system **13502** may communicate through an access point, over a mobile ad hoc network or mechanism for connectivity described herein for devices and systems elements and/or through network elements described herein.

**[1797]** In embodiments, one or more smart heating systems described in Appendix B may incorporate, integrate, use, or connect with facilities, platforms, modules, and the like that may enable the smart heating system to perform functions such as analytics, self-organizing storage, data collection and the like that may improve data collection, deploy increased intelligence, and the like. Various data analysis techniques, such as machine pattern recognition of data, collection, generation, storage, and communication of fusion data from analog industrial sensors, multi-sensor data collection and multiplexing, self-organizing data pools, self-organizing swarm of industrial data collectors, and others described herein may be embodied in, enabled by, used in combination with, and derived from data collected by one or more of the smart heating systems.

**[1798]** In embodiments, a smart heating system may be configured with local data collection capabilities for obtaining long blocks of data (i.e., long duration of data acquisition), such as from a plurality of sensors, at a single relatively high-sampling rate as opposed to multiple sets of data taken at different sampling rates. By way of this example, the local data collection capabilities may include planning data acquisition routes based on historical templates and the like. In embodiments, the local data collection capabilities may include managing data collection bands, such as bands that define a specific frequency band and at least one of a group of spectral peaks, true-peak level, crest factor and the like.

**[1799]** In embodiments, one or more smart heating systems may participate as a self-organizing swarm of IoT devices that may facilitate industrial data collection. The smart heating systems may organize with other smart heating systems, IoT devices, industrial data collectors, and the like to organize among themselves to optimize data collection based on the capabilities and conditions of the smart heating system and needs to sense, record, and acquire information from and around the smart heating systems. In embodiments, one or more smart heating systems may be configured with processing intelligence and capabilities that may facilitate coordinating with other members, devices, or the like of the swarm. In embodiments, a smart heating system member of the swarm may track information about what other smart heating systems in a swarm are handling and collecting to facilitate allocating data collection activities, data storage, data processing and data publishing among the swarm members.

**[1800]** In embodiments, a plurality of smart heating systems may be configured with distinct burners but may share a common hydrogen production system and/or a common hydrogen storage system. In embodiments, the plurality of smart heating systems may coordinate data collection associated with the common hydrogen production and/or storage systems so that data collection is not unnecessarily duplicated by multiple smart heating systems. In embodiments, a smart heating system that may be consuming hydrogen may perform the hydrogen production and/or storage data collection so that as smart heating system may prepare to

consume hydrogen, they coordinate with other smart heating systems to ensure that their consumption is tracked, even if another smart heating system performs the data collection, handling, and the like. In embodiments, smart heating systems in a swarm may communicate among each other to determine which smart heating system will perform hydrogen consumption data collection and processing when each smart heating system prepares to stop consumption of hydrogen, such as when heating, cooking, or other use of the heat is nearing completion and the like. By way of this example when a plurality of smart heating systems is actively consuming hydrogen, data collection may be performed by a first smart heating system, data analytics may be performed by a second smart heating system, and data and data analytics recording or reporting may be performed by a third smart heating system. By allocating certain data collection, processing, storage, and reporting functions to different smart heating systems, certain smart heating systems with sufficient storage, processing bandwidth, communication bandwidth, available energy supply and the like may be allocated an appropriate role. When a smart heating system is nearing an end of its heating time, cooking time, or the like, it may signal to the swarm that it will be going into power conservation mode soon and, therefore, it may not be allocated to perform data analysis or the like that would need to be interrupted by the power conservation mode.

**[1801]** In embodiments, another benefit of using a swarm of smart heating systems as disclosed herein is that data storage capabilities of the swarm may be utilized to store more information than could be stored on a single smart heating system by sharing the role of storing data for the swarm.

**[1802]** In embodiments, the self-organizing swarm of smart heating systems includes one of the systems being designated as a master swarm participant that may facilitate decision making regarding the allocation of resources of the individual smart heating systems in the swarm for data collection, processing, storage, reporting and the like activities.

**[1803]** In embodiments, the methods and systems of self-organizing swarm of industrial data collectors may include a plurality of additional functions, capabilities, features, operating modes, and the like described herein. In embodiments, a smart heating system may be configured to perform any or all of these additional features, capabilities, functions, and the like without limitation.

**[1804]** The terms "a" or "an," as used herein, are defined as one or more than one. The term "another," as used herein, is defined as at least a second or more. The terms "including" and/or "having," as used herein, are defined as comprising (i.e., open transition).

**[1805]** While only a few embodiments of the present disclosure have been shown and described, it will be obvious to those skilled in the art that many changes and modifications may be made thereunto without departing from the spirit and scope of the present disclosure as described in the following claims. All patent applications and patents, both foreign and domestic, and all other publications referenced herein are incorporated herein in their entireties to the full extent permitted by law.

**[1806]** While only a few embodiments of the present disclosure have been shown and described, it will be obvious to those skilled in the art that many changes and modifications may be made thereunto without departing from the spirit and scope of the present disclosure as described in the following claims. All patent applications and patents, both foreign and domestic, and all other publications referenced herein are incorporated herein in their entireties to the full extent permitted by law.

**[1807]** The methods and systems described herein may be deployed in part or in whole through a machine that executes computer software, program codes, and/or instructions on a processor. The present disclosure may be implemented as a method on the machine, as a system or apparatus as part of or in relation to the machine, or as a computer program product embodied in a computer readable medium executing on one or more of the machines. In embodiments, the processor may be part of a server, cloud server, client, network infrastructure, mobile computing platform, stationary computing platform, or other computing platform. A processor may be any kind of computational or processing device capable of executing program instructions, codes, binary instructions, and the like. The processor may be or may include a signal processor, digital processor, embedded processor, microprocessor, or any variant such as a co-processor (math co-processor, graphic co-processor, communication co-processor, and the like) and the like that may directly or indirectly facilitate execution of program code or program instructions stored thereon. In addition, the processor may enable execution of multiple programs, threads, and codes. The threads may be executed simultaneously to enhance the performance of the processor and to facilitate simultaneous operations of the application. By way of implementation, methods, program codes, program instructions, and the like described herein may be implemented in one or more thread. The thread may spawn other threads that may have assigned priorities associated with them; the processor may execute these threads based on priority or any other order based on instructions provided in the program code. The processor, or any machine utilizing one, may include non-transitory memory that stores methods, codes, instructions, and programs as described herein and elsewhere. The processor may access a non-transitory storage medium through an interface that may store methods, codes, and instructions as described herein and elsewhere. The storage medium associated with the processor for storing methods, programs, codes, program instructions, or other type of instructions capable of being executed by the computing or processing device may include but may not be limited to one or more of a CD-ROM, DVD, memory, hard disk, flash drive, RAM, ROM, cache, and the like.

**[1808]** A processor may include one or more cores that may enhance speed and performance of a multiprocessor. In embodiments, the process may be a dual core processor, quad core processors, other chip-level multiprocessor and the like that combine two or more independent cores (called a die).

**[1809]** The methods and systems described herein may be deployed in part or in whole through a machine that executes computer software on a server, client, firewall, gateway, hub, router, or other such computer and/or networking hardware. The software program may be associated with a server that may include a file server, print server, domain server, internet server, intranet server, cloud server, and other variants such as secondary server, host server, distributed server, and the like. The server may include one or more of memories, processors, computer readable transitory and/or

non-transitory media, storage media, ports (physical and virtual), communication devices, and interfaces capable of accessing other servers, clients, machines, and devices through a wired or a wireless medium, and the like. The methods, programs, or codes as described herein and elsewhere may be executed by the server. In addition, other devices required for execution of methods as described in this application may be considered as a part of the infrastructure associated with the server.

**[1810]** The server may provide an interface to other devices including, without limitation, clients, other servers, printers, database servers, print servers, file servers, communication servers, distributed servers, social networks, and the like. Additionally, this coupling and/or connection may facilitate remote execution of program across the network. The networking of some or all of these devices may facilitate parallel processing of a program or method at one or more locations without deviating from the scope of the disclosure. In addition, any of the devices attached to the server through an interface may include at least one storage medium capable of storing methods, programs, code, and/or instructions. A central repository may provide program instructions to be executed on different devices. In this implementation, the remote repository may act as a storage medium for program code, instructions, and programs.

**[1811]** The software program may be associated with a client that may include a file client, print client, domain client, internet client, intranet client, and other variants such as secondary client, host client, distributed client, and the like. The client may include one or more of memories, processors, computer readable transitory and/or non-transitory media, storage media, ports (physical and virtual), communication devices, and interfaces capable of accessing other clients, servers, machines, and devices through a wired or a wireless medium, and the like. The methods, programs, or codes as described herein and elsewhere may be executed by the client. In addition, other devices required for execution of methods as described in this application may be considered as a part of the infrastructure associated with the client.

**[1812]** The client may provide an interface to other devices including, without limitation, servers, other clients, printers, database servers, print servers, file servers, communication servers, distributed servers, and the like. Additionally, this coupling and/or connection may facilitate remote execution of a program across the network. The networking of some or all of these devices may facilitate parallel processing of a program or method at one or more location without deviating from the scope of the disclosure. In addition, any of the devices attached to the client through an interface may include at least one storage medium capable of storing methods, programs, applications, code, and/or instructions. A central repository may provide program instructions to be executed on different devices. In this implementation, the remote repository may act as a storage medium for program code, instructions, and programs.

**[1813]** Various embodiments described in this document relate to communication protocols that improve aspects of communication between nodes on a data network. These aspects include, for instance, average, worst case, or variability in communication delay, channel utilization, and/or error rate. These embodiments are primarily described in the context of packet switched networks, and more particularly in the context of Internet Protocol (IP) based packet switched networks. However, it should be understood that at least some of the embodiments are more generally applicable to data communication that does not use packet switching or IP, for instance based on circuit-switched of other forms of data networks.

**[1814]** Furthermore, various embodiments are described in the context of data being sent from a "server" to a "client." It should be understood that these terms are used very broadly, roughly analogous to "data source" and "data destination". Furthermore, in at least some applications of the techniques, the nodes are peers, and may alternate roles as "server" and "client" or may have both roles (i.e., as data source and data destination) concurrently. However, for the sake of exposition, examples where there is a predominant direction of data flow from a "server" node to a "client" node are described with the understanding that the techniques described in these examples are applicable to many other situations.

**[1815]** One example for a client-server application involves a server passing multimedia (e.g., video and audio) data, either recorded or live, to a client for presentation to a user. Improved aspects of communication from the client to the server in such an example can reduced communication delay, for instance providing faster startup, reduced instances of interrupted playback, reduced instances of bandwidth reduction, and/or increased quality by more efficient channel utilization (e.g., by avoiding use of link capacity in retransmissions or unnecessary forward error correction). This example is useful for exposition of a number of embodiments. However, it must be recognized that this is merely one of many possible uses of the approached described below.

**[1816]** FIG. **183** shows a high-level block diagram of some components that may be interconnected on a portion of a data network. A general example of a communication connection or session arranged on today's Internet may be represented as a client node **125** (e.g., a client computer) communicating with a server node **111** (e.g., a server computer) over one network or an interconnection of multiple networks **151**-**152**. For example, the client and server nodes may communicate over the public Internet using the Internet Protocol (IP). FIG. **183** additionally shows a number of nodes **161**, **162** positioned on the respective networks **151**, **152**, and a client proxy **123** on one of the networks **152**.

**[1817]** Referring to FIG. **184**, in an example involving conventional communication techniques, a client node **125** hosts a client application **222**, which communicates with a TCP module **226** that implements a Transmission Control Protocol (TCP). The TCP module **226** communicates with an IP module **228** that implements an Internet Protocol for communicating between nodes on the interconnection of networks. The communication passes between nodes of the networks over a channel **230** (i.e., an abstraction of the path comprising physical links between equipment interconnecting the nodes of the network). Similarly, the server node **111** hosts a server application **212**, a TCP module **216**, and an IP module **218**. When the server application **111** and the client application **222** communicate, for example, with data being passed from the server application to the client application, TCP module **216** at the server node **111** and the TCP layer **226** at the client node **125** interact to implement the two endpoints for the Transmission Control Protocol (TCP).

**[1818]** Generally, data units **201** (e.g., encoding of multimedia frames or other units of application data) generated by

the server application **212** are passed to the TCP module **216**. The TCP module assembles data payloads **202**, for example, concatenating multiple data units **201** and/or by dividing data units **201** into multiple data payloads **202**. In the discussion below, these payloads are referred to in some instances as the "original" or "uncoded" "packets" or original or uncoded "payloads", which are communicated to the client (i.e., destination) node in the network. Therefore, it should be understood that the word "packet" is not used with any connotation other than being a unit of communication. In the TCP embodiment illustrated in FIG. **184**, each data payload **202** is "wrapped" in a TCP packet **204**, which is passed to the IP module **218**, which further wraps the TCP packet **204** in an IP packet **206** for transmission from the server node **111** to the client node **125**, over what is considered to be a IP layer channel **230** linking the server node **111** and the client node **125**. Note that at lower layers, such as at a data link layer, further wrapping, unwrapping, and/or rewrapping of the IP packet **206** may occur, however, such aspects are not illustrated in FIG. **184**. Generally, each payload **202** is sent in at least one TCP packet **204** and a corresponding IP packet **206**, and if not successfully received by the TCP module **226** at the client node **125**, may be retransmitted again by the TCP module **216** at the server node **111** to result in successful delivery. The data payloads **202** are broken down into the data units **201** originally provided by the server application **212** and are then delivered in the same order to the client application **222** as they were provided by the server application **212**.

**[1819]** TCP implements a variety of features, including retransmission of lost packets, maintaining order of packets, and congestion control to avoid congestion at nodes or links along the path through the network and to provide fair allocation of the limited bandwidth between and within the networks at intermediate nodes. For example, TCP implements a "window protocol" in which only a limited number (or range of sequence numbers) of packets are permitted to be transmitted for which end-to-end acknowledgments have not yet been received. Some implementations of TCP adjust the size of the window, for example, starting initially with a small window ("slow start") to avoid causing congestion. Some implementations of TCP also control a rate of transmission of packets, for example, according to the round-trip-time and the size of the window.

**[1820]** The description below details one or more alternatives to conventional TCP-based communication as illustrated in FIG. **184**. In general, these alternatives improve one or more performance characteristics, for examples, one or more of overall throughput, delay, and jitter. In some applications, these performance characteristics are directly related to application level performance characteristics, such as image quality in a multimedia presentation application. Referring to FIG. **183**, in a number of examples, these alternatives are directed to improving communication between a server node **111** and at least one client node **125**. One example of such communication is streaming media from the server node **111** to the client nodes **125**, however, it should be recognized that this is only one of many examples where the described alternatives can be used.

**[1821]** It should also be understood that the network configuration illustrated in FIG. **183** is merely representative of a variety of configurations. A number of these configurations may have paths with disparate characteristics. For example, a path from the server node **111** to a client node **125** may pass over links using different types of equipment and with very different capacities, delays, error rates, degrees of congestion etc. In many instances, it is this disparity that presents challenges to achieving end-to-end communication that achieves high rate, low delay and/or low jitter. As one example, the client node **125** may be a personal communication device on a wireless cellular network, the network **152** in FIG. **183** may be a cellular carrier's private wired network, and network **151** may be the public Internet. In another example, the client node **125** may be a "WiFi" node of a private wireless local area network (WLAN), network **152** may be a private local area network (LAN), and network **151** may be the public Internet.

**[1822]** A number of the alternatives to conventional TCP make use of a Packet Coding (PC) approach. Furthermore, a number of these approaches make use of Packet Coding essentially at the Transport Layer. Although different embodiments may have different features, these implementations are generically referred to below as Packet Coding Transmission Control Protocol (PC-TCP). Other embodiments are also described in which the same or similar PC approaches are used at other layers, for instance, at a data link layer (e.g., referred to as PC-DL), and therefore it should be understood that in general features described in the context of embodiments of PC-TCP may also be incorporated in PC-DL embodiments.

**[1823]** Before discussing particular features of PC-TCP in detail, a number of embodiments of overall system architectures are described. The later description of various embodiments of PC-TCP should be understood to be applicable to any of these system architectures, and others.

Architectures and Applications

Transport Layer Architectures

Kernel Implementation

**[1824]** Referring to FIG. **185**, in one architecture, the TCP modules at the server node **111** and the client node **125** are replaced with PC-TCP modules **316** and **326**, respectively. Very generally, the PC-TCP module **316** at the server accepts data units **201** from the server application **212** and forms original data payloads **202** (i.e., "uncoded packets", formed internally to the PC-TCP module **316** and not illustrated). Very generally, these data payloads **202** are transported to and/or reconstructed at the PC-TCP module **326** at the client node **125**, where the data units **201** are extracted and delivered to the client application **222** in the same order as provided by the server application **212**. As described in substantially more detail below, at least some embodiments of the PC-TCP modules make use of Random Linear Coding (RLC) for forming packets **304** for transmission from the source PC-TCP module to the destination PC-TCP module, with each packet **304** carrying a payload **302**, which for at least some packets **304** is formed from a combination of multiple original payloads **202**. In particular, at least some of the payloads **202** are formed as linear combinations (e.g., with randomly generated coefficients in a finite field) of original payloads **202** to implement Forward Error Correction (FEC), or as part of a retransmission or repair approach in which sufficient information is not provided using FEC to overcome loss of packets **304** on the channel **230**. Furthermore, the PC-TCP modules **316** and **326** together implement

congestion control and/or rate control to generally coexist in a "fair" manner with other transport protocols, notably conventional TCP.

**[1825]** One software implementation of the PC-TCP modules **316** or **326**, is software modules that are integrated into the operating system (e.g., into the "kernel", for instance, of a Unix-based operating system) in much the same manner that a conventional TCP module is integrated into the operating system. Alternative software implementations are discussed below.

**[1826]** Referring to FIG. **186**, in an example in which a client node **125** is a smartphone on a cellular network (e.g., on an LIE network) and a server node **111** is accessible using IP from the client node, the approach illustrated in FIG. **185** is used with one end-to-end PC-TCP session linking the client node **125** and the server node **111**. The IP packets **300** carrying packets **304** of the PC-TCP session traverse the channel between the nodes using conventional approaches without requiring any non-conventional handling between the nodes at the endpoints of the session.

**[1827]** Alternative Software Implementations

**[1828]** The description above includes modules generically labeled "PC-TCP". In the description below, a number of different implementations of these modules are presented. It should be understood that, in general, any instance of a PC-TCP module may be implemented using any of the described or other approaches.

**[1829]** Referring to FIG. **187**, in some embodiments, the PC-TCP module **326** (or any other instance of PC-TCP module discussed in this document) is implemented as a PC-TCP module **526**, which includes a Packet Coding (PC) module **525** that is coupled to (i.e., communicates with) a convention User Datagram Protocol (UDP) module **524**. Essentially each PC-TCP packet described above consists of a PC packet "wrapped" in a UDP packet. The UDP module **524** then communicates via the IP modules in a conventional manner. In some implementations, the PC module **525** is implemented as a "user space" process, which communicates with a kernel space UDP module, while in other implementations, the PC module **525** is implement in kernel space.

**[1830]** Referring to FIG. **188**, in some embodiments, the PC module **625**, or its function, is integrated into a client application **622**, which then communicates directly with the conventional UDP module **524**. The PC-TCP module **626** therefore effectively spans the client application **622** and the kernel implementation of the UDP module **524**. While use of UDP to link the PC modules at the client and at the server has certain advantages, other protocols may be used. One advantage of UDP is that reliable transmission through use of retransmission is not part of the UDP protocol, and therefore error handling can be carried out by the PC modules.

**[1831]** Referring to FIG. **189**, in some implementations, a PC-TCP module **726** is divided into one part, referred to as a PC-TCP "stub" **727**, which executes in the kernel space, and another part, referred to as the PC-TCP "code" **728**, which executes in the user space of the operating system environment. The stub **727** and the code **728** communicate to provide the functionality of the PC-TCP module.

**[1832]** It should be understood that these software implementations are not exhaustive. Furthermore, as discussed further below, in some implementations, a PC-TCP module of any of the architectures or examples described in this document may be split among multiple hosts and/or network nodes, for example, using a proxy architecture.

**[1833]** Proxy Architectures

**[1834]** Conventional Proxy Node

**[1835]** Referring to FIG. **190**, certain conventional communication architectures make use of proxy servers on the communication path between a client node **125** and a server node **111**. For example, a proxy node **820** hosts a proxy server application **822**. The client application **222** communicates with the proxy server application **822**, which acts as an intermediary in communication with the server application **212** (not shown in FIG. **190**). It should be understood that a variety of approaches to implementing such a proxy are known. In some implementations, the proxy application is inserted on the path without the client node necessarily being aware. In some implementations, a proxy client **812** is used at the client node, in some cases forming a software "shim" between the application layer and the transport layer of the software executing at the client node, with the proxy client **812** passing communication to the proxy server application. In a number of proxy approaches, the client application **222** is aware that the proxy is used, and the proxy explicitly acts as an intermediary in the communication with the server application. A particular example of such an approach makes use of the SOCKS protocol, in which the SOCKS proxy client application (i.e., an example of the proxy client **812**) communicates with a SOCKS proxy server application (i.e., an example of the proxy server application **822**). The client and server may communicate over TCP/IP (e.g., via TCP and IP modules **826***b* and **828***b*, which may be implemented together in one TCP module), and the SOCKS proxy server application fulfills communication requests (i.e., with the server application) on behalf of the client application (e.g., via TCP and IP modules **826***a* and **828***a*). Note that the proxy server application may also perform functions other than forwarding communication, for example, providing a cache of data that can be used to fulfill requests from the client application.

First Alternative Proxy Node

**[1836]** Referring to FIG. **191**, in an alternative proxy architecture, a proxy node **920** hosts a proxy server application **922**, which is similar to the proxy server application **822** of FIG. **190**. The client application **222** communicates with the proxy server application **922**, for example as illustrated using conventional TCP/IP, and in some embodiments using a proxy client **812** (e.g., as SOCKS proxy client), executing at the client node **125**. As illustrated in FIG. **191**, the proxy server application **922** communicates with a server application using a PC-TCP module **926**, which is essentially the same as the PC-TCP module **326** shown in FIG. **185** for communicating with the PC-TCP module **316** at the server node **111**.

**[1837]** In some embodiments, the communication architecture of FIG. **191** and the conventional communication architecture of FIG. **184** may coexist in the communication between the client application and the server application may use PC-TCP, conventional TCP, or concurrently use both PC-TCP and TCP. The communication approach may be based on a configuration of the client application and/or based on dialog between the client and server applications in establishing communication between them.

**[1838]** Referring to FIG. **192**, in an example of the architecture shown in FIG. **191**, the proxy application **922** is

hosted in a gateway **1020** that links a local area network (LAN) **1050** to the Internet. A number of conventional client nodes **125***a-z* are on the LAN, and make use of the proxy server application to communicate with one or more server applications over the Internet. Various forms of gateway **1020** may be used, for instance, a router, firewall, modem (e.g., cable modem, DSL modem etc.). In such examples, the gateway **1020** may be configured to pass conventional TCP/IP communication between the client nodes **125***a-z* and the Internet, and for certain server applications or under certain conditions (e.g., determined by the client, the server, or the gateway) use the proxy to make use of PC-TCP for communication over the Internet.

**[1839]** It should be understood that the proxy architecture shown in FIG. **191** may be equally applied to server nodes **111** that communicate with a proxy node using TCP/IP, with the proxy providing PC-TCP communication with client nodes, either directly or via client side proxies. In such cases, the proxy server application serving the server nodes may be hosted, for instance, in a gateway device, such as a load balancer (e.g., as might be used with a server "farm") that links the servers to the Internet. It should also be understood that in some applications, there is a proxy node associated with the server node as well as another proxy associated with the client node.

Integrated Proxy

**[1840]** Referring to FIG. **193**, in some examples, a proxy server application **1123**, which provides essentially the same functionality as the proxy server application **922** of FIG. **191**, is resident on the client node **1121** rather than being hosted on a separate network node as illustrated in FIG. **191**. In such an example, the connection between the client application **222** and the proxy server application **1123** is local, with the communication between them not passing over a data network (although internally it may be passed via the IP **1129** software "stack"). For example, a proxy client **812** (e.g., a SOCKS client) interacts locally with the proxy server application **1123**, or the functions of the proxy client **812** and the proxy server application **1123** are integrated into a single software component.

Second Alternative Proxy Node

**[1841]** In examples of the first alternative proxy node approach introduced above, communication between the client node and the proxy node uses conventional techniques (e.g., TCP/IP), while communication between the proxy node and the server node (or its proxy) uses PC-TCP **1127**. Such an approach may mitigate congestion and/or packet error or loss on the link between the server node and the proxy node, however, it would not generally mitigate issues that arise on the link between the proxy node and the client node. For example, the client node and the proxy node may be linked by a wireless channel (e.g., WiFi, cellular, etc.), which may introduce a greater degree of errors than the link between the server and the proxy node over a wired network.

**[1842]** Referring to FIG. **194**, in a second proxy approach, the client node **125** hosts a PC-TCP module **326**, or hosts or uses any of the alternatives of such a module described in this document. The client application **222** makes use of the PC-TCP module **326** at the client node to communication with a proxy node **1220**. The proxy node essentially translates between the PC-TCP communication with the client node **125** and conventional (e.g., TCP) communication with the server node. The proxy node **1220** includes a proxy server application **1222**, which makes use of a PC-TCP module **1226** to communicate with the client node (i.e., forms transport layer link with the PC-TCP module **326**) at the client node, and uses a conventional TCP module **826***a* to communicate with the server.

**[1843]** Examples of such a proxy approach are illustrated in FIGS. **195-197**. Referring to FIG. **195**, an example of a proxy node **1220** is integrated in a wireless access device **1320** (e.g., a WiFi access point, router, etc.). The wireless access device **1320** is coupled to the server via a wired interface **1351** and coupled to a wireless client node **125** via a wireless interface **1352** at the access device and a wireless interface **1353** at the client node. The wireless access device **1320** includes a proxy and communication stack implementation **1321**, which includes the modules illustrated for the proxy **1220** in FIG. **194**, and the wireless client node **125** includes an application and communication stack implementation **1322**, which includes the modules illustrated for the client node **125** in FIG. **194**. Note that the IP packets **300** passing between the access device **1320** and the client node **125** are generally further "wrapped" using a data layer protocol, for example, in data layer packets **1350**. As introduced above, in some implementations, rather than implementing the Packet Coding at the transport layer, in a modification of the approach shown in FIG. **195**, the Packet Coding approaches are implemented at the data link layer.

**[1844]** Referring to FIG. **196**, a proxy node **1220** is integrated in a node of a private land network of a cellular service provider. In this example, communication between a server **111** and the proxy node **1220** use conventional techniques (e.g., TCP) over the public Internet, while communication between the proxy node and the client node use PC-TCP. It should be understood that the proxy node **1220** can be hosted at various points in the service provider's network, including without limitation at a gateway or edge device that connects the provider's private network to the Internet (e.g. a Packet Data Network Gateway of an LIE network), and/or at an internal node of the network (e.g., a serving gateway, base station controller, etc.). Referring to FIG. **197**, a similar approach may be used with a cable television based network. PC-TCP communication may pass between a head end device and a distribution network (e.g., a fiber, coaxial, or hybrid fiber-coaxial network) to individual homes. For example, each home may have devices that include PC-TCP capabilities themselves, or in some example, a proxy node (e.g., a proxy node integrated in a gateway **1010** as shown in FIG. **192**) terminates the PC-TCP connections at each home. The proxy node that communicates with the server **111** using conventional approaches, while communicating using PC-TCP over the distribution network is hosted in a node in the service provider's private network, for instance at a "head end" device **1220***b* of the distribution network, or in a gateway device **1220***a* that links the service provider's network with the public Internet.

Intermediate Proxy

**[1845]** Referring to FIG. **198**, in another architecture, the channel between a server node and a client node is broken in to independent tandem PC-TCP links. An intermediate node **1620** has two instances of a PC-TCP module **1626** and **1627**. One PC-TCP module **1626** terminates a PC-TCP channel and communicates with a corresponding PC-TCP

module at the server (e.g., hosted at the server node or at a proxy associated with the server node). The other PC-TCP module **1627** terminates a PC-TCP channel and communicates with a corresponding PC-TCP module at the client (e.g., hosted at the client node or at a proxy associated with the client node). The two PC-TCP modules **1626** and **1627** are coupled via a routing application **1622**, which passes decoded data units provided by one of the PC-TCP modules (e.g., module **1626** from the server node) and to another PC-TCP module for transmission to the client.

**[1846]** Note that parameters of the two PC-TCP channels that are bridged at the intermediate node **1620** do not have to be the same. For example, the bridged channels may differ in their forward error correction code rate, block size, congestion window size, pacing rate, etc. In cases in which a retransmission protocol is used to address packet errors or losses that are not correctable with forward error correction coding, the PC-TCP modules at the intermediate node request or service such retransmission requests.

**[1847]** In FIG. **198**, only two PC-TCP modules are shown, but it should be understood that the intermediate node **1620** may concurrently provide a link between different pairs of server and client nodes.

**[1848]** Referring to FIG. **199**, an example of this architecture may involve a server node **111** communicating with an intermediate node **1620**, for example, hosted in a gateway device **1720** of a service provider network with the intermediate node **1620** also communicating with the client node **125** via a second PC-TCP link.

Recoding Node

**[1849]** Referring to FIG. **200**, another architecture is similar to the one shown in FIG. **198** in that an intermediate node **1820** is on a path between a server node **111** and a client node **125**, with PC-TCP communication passing between it and the server node and between it and the client node.

**[1850]** In FIG. **198**, the PC-TCP modules **1626**, **1627** fully decode and encode the data passing through the node. In the approach illustrated in FIG. **200**, such complete decoding is not necessary. Rather, a recoding PC-TCP module **1822** receives payloads **1802***a-b* from PC-TCP packets **1804***a-b*, and without decoding to reproduce the original uncoded payloads **202** (not shown), the module uses the received PC-TCP packets to send PC-TCP packets **304**, with coded payloads **302**, toward the destination. Details of various recoding approaches are described further later in this document. However, in general, the processing by the recoding PC-TCP module includes one or more of the following functions: forwarding PC-TCP packets without modification to the destination; "dropping" received PC-TCP packets without forwarding, for example, if the redundancy provided by the received packets are not needed on the outbound link; generating and transmitting new PC-TCP packets to provide redundancy on the outbound link. Note that the recording PC-TCP module may also provide acknowledgement information on the inbound PC-TCP link (e.g., without requiring acknowledgement from the destination node), for example, to the server, and process received acknowledgements on the outbound link. The processing of the received acknowledgements may include causing transmission of additional redundant information in the case that the originally provided redundancy information was not sufficient for reconstruction of the payload data.

**[1851]** In general, the recoding PC-TCP module maintains separate communication characteristics on the inbound and outbound PC-TCP channels. Therefore, although it does not decode the payload data, it does provide control and, in general, the PC-TCP channels may differ in their forward error correction code rate, block size, congestion window size, pacing rate, etc.

Multipath Transmission

Single Endpoint Pair

**[1852]** In examples described above, a single path links the server node **111** and the client node **125**. The possibility of using conventional TCP concurrently with PC-TCP between two nodes was introduced. More generally, communication between a pair of PC-TCP modules (i.e., one at the server node **111** and one at the client node **125**) may follow different paths.

**[1853]** Internet protocol itself supports packets passing from one node to another following different paths and possibly being delivered out of order. Multiple data paths or channels can link a pair of PC-TCP modules and be used for a single session. Beyond native multi-path capabilities of IP networks, PC-TCP modules may use multiple explicit paths for a particular session. For example, without intending to be exhaustive, combinations of the following types of paths may be used:

Uncoded TCP and PC Over UDP

PC Over Conventional TCP and UDP

PC-TCP Over Wireless LAN (e.g., WiFi, 802.11) and Cellular Data (e.g., 3G, LTE)

**[1854]** PC-TCP concurrently over multiple wireless base stations (e.g., via multiple wireless LAN access points)

**[1855]** In some examples, Network Coding is used such that the multiple paths from a server node to a client node pass through one or more intermediate nodes at which the data is recoded, thereby causing information for different data units to effectively traverse different paths through the network.

**[1856]** One motivation for multipath connection between a pair of endpoints addresses possible preferential treatment of TCP traffic rather than UDP traffic. Some networks (e.g. certain public Wi-Fi, cable television networks, etc.) may limit the rate of UDP traffic, or drop UDP packets preferentially compared to TCP (e.g., in the case of congestion). It may be desirable to be able to detect such scenarios efficiently without losing performance. In some embodiments, a PC-TCP session initially establishes and divides the transmitted data across both a TCP and a UDP connection. This allows comparison of the throughput achieved by both connections while sending distinct useful data on each connection. An identifier is included in the initial TCP and UDP handshake packets to identify the two connections as belonging to the same coded PC-TCP session, and non-blocking connection establishment can be employed so as to allow both connections to be opened at the outset without additional delay. The transmitted data is divided across the two connections using e.g. round-robin (sending alternating packets or runs of packets on each connection) or load-balancing/back pressure scheduling (sending each packet to the connection with the shorter outgoing data queue). Such

alternation or load balancing can be employed in conjunction with techniques for dealing with packet reordering. Pacing rate and congestion window size can be controller separately for the UDP and the TCP connection, or can be controlled together. By controlling the two connections together (e.g., using only a single congestion window to regulate the sum of the number of packets in flight on both the TCP and UDP connections) may provide a greater degree of "fairness" as compared to separate control.

**[1857]** In some examples, the adjustment of the fraction of messages transmitted over each data path/protocol is determined according to the relative performance/throughput of the data paths/protocols. In some examples, the adjustment of allocation of messages occurs only during an initial portion of the transmission. In other examples, the adjustment of allocation of messages occurs on an ongoing basis throughout the transmission. In some examples, the adjustment reverses direction (e.g., when a data path stops preferentially dropping UDP messages, the number of messages transmitted over that data path may increase).

**[1858]** In some embodiments the PC-TCP maintains both the UDP based traffic and the TCP based traffic for the duration of the session. In other embodiments, the PC-TCP module compares the behavior of the UCP and TCP traffic, for example over a period specified in terms of time interval or number of packets, where these quantities specifying the period can be set as configuration parameters and/or modified based on previous coded TCP sessions, e.g. the comparison period can be reduced or eliminated if information on relative TCP/UDP performance is available from recent PC-TCP sessions. If the UDP connection achieves better throughput, the PC-TCP session can shift to using UDP only. If the TCP connection achieves better throughput, the PC-TCP session can shift to using TCP. In some embodiments, different types of traffic are sent over the TCP link rather than the UDP link. In one such example, the UDP connection is used to send some forward error correction for packets where it is beneficial to reduce retransmission delays, e.g. the last block of a file or intermediate blocks of a stream. In this example, the uncoded packets may be sent over a TCP stream with forward error correction packets sent over UDP. If the receiver can use the forward error correction packets to recover from erasures in the TCP stream, a modified implementation of the TCP component of the receiver's PC-TCP module may be able to avoid using a TCP-based error recovery procedure. On the other hand, non-delivery of a forward error correction packet does not cause an erasure of the data that is to be recovered at the receiver, and therefore unless there is an erasure both on the UDP path and on the TCP path, dropping of a UDP packet does not cause delay.

Distributed Source

**[1859]** In some examples, multiple server nodes communicate with a client node. One way this can be implemented is with there being multiple communication sessions each involving one server node and one client node. In such an implementation, there is little or no interaction between a communication session between one server node and the client node and another communication session between another server node and the client node. In some examples, each server node may have different parts of a multimedia file, with each server providing its parts for combination at the client node.

Distributed Content Delivery

**[1860]** In some examples, there is some relationship between the content provided by different servers to the client. One example of such a relationship is use of a distributed RAID approach in which redundancy information (e.g., parity information) for data units at one or more servers is stored at and provided from another server. In this way, should a data unit not reach the client node from one of the server nodes, the redundancy information may be preemptively sent or requested from the other node, and the missing data unit reconstructed.

**[1861]** In some examples, random linear coding is performed on data units before they are distributed to multiple server nodes as an alternative to use of distributed RAID. Then each server node establishes a separate communication session with the client node for delivery of part of the coded information. In some of these examples, the server nodes have content that has already been at least partially encoded and then cached, thereby avoiding the necessity of repeating that partial encoding for different client nodes that will received the same application data units. In some examples, the server nodes may implement some of the functionality of the PC modules for execution during communication sessions with client nodes, for example, having the ability to encode further redundancy information in response to acknowledgment information (i.e., negative acknowledgement information) received from a client node.

**[1862]** In some implementations, the multiple server nodes are content delivery nodes to which content is distributed using any of a variety of known techniques. In other implementations, these multiple server nodes are intermediary nodes at which content from previous content delivery sessions was cached and therefore available without requiring re-delivery of the content from the ultimate server node.

**[1863]** In some examples of distributed content delivery, each server to client connection is substantially independent, for example, with independently determined communication parameters (e.g., error correction parameters, congestion window size, pacing rate, etc.). In other examples, at least some of the parameters are related, for example, with characteristics determined on one server-to-client connection being used to determine how the client node communicates with other server nodes. For example, packet arrival rate, loss rate, and differences in one-way transmission rate, may be measured on one connections and these parameters may be used in optimizing multipath delivery of data involving other server nodes. One manner of optimization may involve load balancing across multiple server nodes or over communication links on the paths from the server nodes to the client nodes.

**[1864]** In some implementations, content delivery from distributed server nodes making use of PC-TCP, either using independent sessions or using coordination between sessions, may achieve the performance of conventional distributed content delivery but requiring a smaller number of server nodes. This advantage may arise due to PC-TCP providing lower latency and/or lower loss rates than achieved with conventional TCP.

Multicast

**[1865]** FIGS. **201-202** show two examples of delivery of common content to multiple destination nodes simultaneously via multicast connections. The advantage of multicast

is that a single packet or block of N packets has to be sent by the source node into the network and the network will attempt to deliver the packets to all destination nodes in the multicast group. If the content needs to be delivered reliably, then TCP will most likely be used as the transport layer protocol. To achieve reliability, TCP requires destination nodes to respond with acknowledgments and specify the packets that each destination node is missing. If there are 10s of thousands or 100s of thousands of receivers, and each destination node is missing a different packet or set of packets, the number of different retransmissions to the various receivers will undercut the advantages of the simultaneous transmission of the content to all destination nodes at once. With network coding and forward error correction, a block of N packets can be sent to a large number of multicast destination nodes at the same time. The paths to these multiple destination nodes can be similar (all over a large WiFi or Ethernet local area network) or disparate (some over WiFi, some over cellular, some over fiber links, and some over various types of satellite networks). The algorithms described above that embody transmission and congestion control, forward error correction, sender based pacing, receiver based pacing, stream based parameter tuning, detection and correction for missing and out of order packets, use of information across multiple connections, fast connection start and stop, TCP/UDP fallback, cascaded coding, recoding by intermediate nodes, and coding of the ACKs can be employed to improve the throughput and reliability of delivery to each of the multicast destination node. When losses are detected and coding is used, the extra coded packets can be sent to some or all destination nodes. As long as N packets are received at each destination node, the missing packets at each destination node can be reconstructed from the coded packets if the number of extra coded packets match or exceed the number of packets lost at all of the receivers. If fewer than N packets are received at any of the destination nodes, any set of different coded packets from the block of N packets can be retransmitted and used to reconstruct any missing packet in the block at each of the destination nodes. If some destination nodes are missing more than one packet, then the maximum number of coded packets to be retransmitted will be equal to the largest number of packets that are missing by any of the destination nodes. These few different coded packets can be used to reconstruct the missing packets at each of the destination nodes. For example if the most packets missing at any destination node is four, then any four different coded packets can be retransmitted.

Further Illustrative Examples

**[1866]** FIGS. **203-213** show exemplary embodiments of data communication systems and devices and highlight various ways to implement the novel PC-TCP described herein. These configurations identify some of the possible network devices, configurations, and applications that may benefit from using PC-TCP, but there are many more devices, configurations and applications that may also benefit from PC-TCP. The following embodiments are described by way of example, not limitation.

**[1867]** In an exemplary embodiment depicted in FIG. **203**, a user device **404** such as a smartphone, a tablet, a computer, a television, a display, an appliance, a vehicle, a home server, a gaming console, a streaming media box and the like, may include a PC-TCP proxy that may interface with applications running in the user device **404**. The application on the user device **404** may communicate with a resource in the cloud **402***a* such as a server **408**. The server **408** may be a file server, a web server, a video server, a content server, an application server, a collaboration server, an FTP server, a list server, a telnet server, a mail server, a proxy server, a database server, a game server, a sound server, a print server, an open source server, a virtual server, an edge server, a storage device and the like, and may include a PC-TCP proxy that may interface with applications and/or processes running on the server **408**. In embodiments, the server in the cloud may terminate the PC-TCP connection and interface with an application on the server **408** and/or may forward the data on to another electronic device in the network. In embodiments, the data connection may travel a path that utilizes the resources on a number of networks **402***a*, **402***b*. In embodiments PC-TCP may be configured to support multipath communication such as for example from a video server **408** through a peering point **406**, though a carrier network **402***b*, to a wireless router or access point **410** to a user device **404** and from a video server **408** through a peering point **406**, though a carrier network **402***b*, to a cellular base station or cell transmitter **412** to a user device **404**. In embodiments, the PC-TCP may include adjustable parameters that may be adjusted to improve multipath performance. In some instances, the exemplary embodiment shown in FIG. **203** may be referred to as an over-the-top (OTT) embodiment.

**[1868]** In embodiments, such as the exemplary embodiments shown in FIG. **204** and FIG. **205**, other devices in the network may comprise PC-TCP proxies. For example, the wireless access point or router **410** and the base station or cell transmitter **412** may comprise PC-TCP proxies. In embodiments, the user device **404** may also comprise a PC-TCP proxy (FIG. **205**) or it may not (FIG. **204**). If the user device does not comprise a PC-TCP proxy, it may communicate with the access point **410** and/or base station **412** using a wireless or cellular protocol and/or conventional TCP or UDP protocol. The PC-TCP proxy in either or both the access point **410** and base station **412** may receive data packets using these conventional communications and may convert these communications to the PC-TCP for a connection to video server **408**. In embodiments, if conventional TCP provides the highest speed connection between the end user device **404** and/or the access point **410** or the base station **412**, then the PC-TCP proxy may utilize only some or all of the features in PC-TCP that may be compliant with and may compliment conventional TCP implementations and transmit the data using the TCP layer.

**[1869]** FIG. **206** shows an exemplary embodiment where a user device may comprise a PC-TCP proxy and may communicate with a PC-TCP proxy server **408** on an internet. In this embodiment, an entity may provide support for high speed internet connections by renting, buying services from, or deploying at least one server in the network and allowing other servers or end user devices to communicate with it using PC-TCP. The at least one server in the network running PC-TCP may connect to other resources in the network and/or end users using TCP or UDP.

**[1870]** In embodiments, such as the exemplary embodiments shown in FIG. **207** and FIG. **208**, other devices in the network may comprise PC-TCP proxies. For example, the wireless access point or router **410** and the base station or cell transmitter **412** may comprise PC-TCP proxies. In

embodiments, the user device **404** may also comprise a PC-TCP proxy (FIG. **208**) or it may not (FIG. **207**). If the user device does not comprise a PC-TCP proxy, it may communicate with the access point **410** and/or base station **412** using a wireless or cellular protocol and/or conventional TCP or UDP protocol. The PC-TCP proxy in either or both the access point **410** and base station **412** may receive data packets using these conventional communications and may convert these communications to the PC-TCP for a connection to PC-TCP server **408**. In embodiments, if conventional TCP provides the highest speed connection between the end user device **404** and/or the access point **410** or the base station **412**, then the PC-TCP proxy may utilize only some or all of the features in PC-TCP that may be compliant with and may compliment conventional TCP implementations and transmit the data using the TCP layer.

**[1871]** In embodiments, at least some network servers **408** may comprise PC-TCP proxies and may communicate with any PC-TCP servers or devices using PC-TCP. In other embodiments, network servers may communicate with PC-TCP servers or devices using conventional TCP and/or other transport protocols running over UDP.

**[1872]** In exemplary embodiments as depicted in FIG. **209**, ISPs and/or carriers may host content on one or more servers that comprise PC-TCP proxies. In embodiments, devices such as set-top boxes, cable boxes, digital video recorders (DVRs), modems, televisions, smart televisions, internet televisions, displays, and the like may comprise PC-TCP proxies. A user device **404** such as described above, may include a PC-TCP proxy that may interface with applications running in the user device **404**. The application on the user device **404** may communicate with a resource in the cloud **402***c* such as a server **408**. The server **408** may be any type of communications server as describe above, and may include a PC-TCP proxy that may interface with applications and/or processes running on the server **408**. In embodiments, the server in the cloud may terminate the PC-TCP connection and interface with an application on the server **408** and/or may forward the data on to another electronic device in the network. In embodiments, the data connection may travel a path that utilizes the resources on a number of networks **402***a*, **402***b*, **402***c*. In embodiments PC-TCP may be configured to support multipath communication such as for example from a video server **408** through a direct peering point (DP) **406**, to a wireless router or access point **410** or a base station **412** to a user device **404** and from a video server **408** directly to an access point **410** and/or to a cellular base station or cell transmitter **412** to a user device **404**. In embodiments, the PC-TCP may include adjustable parameters that may be adjusted to improve multipath performance.

**[1873]** The exemplary placements of networking devices in the communication scenarios described above should not be taken as limitations. It should be recognized that PC-TCP proxies can be placed in any network device and may support any type of data connection. That is, any type of end-user device, switching device, routing device, storage device, processing device and the like, may comprise PC-TCP proxies. Also PC-TCP proxies may reside only in the end-nodes of a communication path and/or only at two nodes along a connection path. However, PC-TCP proxies may also reside in more than two nodes of a communication path and may support multi-cast communications and multipath communications. PC-TCP proxies may be utilized in point-to-point communication networks, multi-hop networks, meshed networks, broadcast networks, storage networks, and the like.

**[1874]** Packet Coding (PC)

**[1875]** The description above focuses on architectures in which a packet coding approach is deployed, and in particular architectures in which a transport layer PC-TCP approach is used. In the description below, a number of features of PC-TCP are described. It should be understood that in general, unless otherwise indicated, these features are compatible with one another and can be combined in various combinations to address particular applications and situations.

Data Characteristics

**[1876]** As introduced above, data units (e.g., audio and/or video frames) are generally used to form data packets, for example, with one data unit per data packet, with multiple data units per data packet, or in some instances separating individual data units into multiple data packets. In some applications, the data units and associated data frames form a stream (e.g., a substantially continuous sequence made available over time without necessarily having groupings or boundaries in the sequence), while in other applications, the data units and associated data frames form one or more batches (e.g., a grouping of data that is required as a whole by the recipient).

**[1877]** In general, stream data is generated over time at a source and consumed at a destination, typically at a substantially steady rate. An example of a stream is a multimedia stream associated with person-to-person communication (e.g., a multimedia conference). Delay (also referred to as latency) and variability in delay (also referred to as jitter) are important characteristics of the communication of data units from a source to a destination.

**[1878]** An extreme example of a batch is delivery of an entire group of data, for example, a multiple gigabyte sized file. In some such examples, reducing the overall time to complete delivery (e.g., by maximizing throughput) of the batch is of primary importance. One example of batch delivery that may have very sensitive time (and real-time update) restraints is database replication.

**[1879]** In some applications, the data forms a series of batches that require delivery from a source to a destination Although delay in start of delivery and/or completion of delivery of a batch of data units may be important, in many applications overall throughput may be most important. An example of batch delivery includes delivery of portions of multimedia content, for instance, with each batch corresponding to sections of viewing time (e.g., 2 seconds of viewing time or 2 MB per batch), with content being delivered in batches to the destination where the data units in the batches are buffered and used to construct a continuous presentation of the content. As a result, an important consideration is the delivery of the batches in a manner than provides continuity between batches for presentation, without "starving" the destination application because a required batch has not arrived in time. In practice, such starving may cause "freezing" of video presentation in multimedia, which is a phenomenon that is all too familiar to today's users of online multimedia delivery. Another important consideration is reduction in the initial delay in providing the data units of the first batch to the destination application. Such delay is manifested, for example, in a user having to wait for

initial startup of video presentation after selecting multimedia for online delivery. Another consideration in some applications is overall throughput. This may arise, for example, if the source application has control over a data rate of the data units, for example, being able to provide a higher fidelity version of the multimedia content if higher throughput can be achieved. Therefore, an important consideration may be providing a sufficiently high throughput in order to enable delivery of a high fidelity version of the content (e.g., as opposed to greatly compressed version or a backed-off rate of the content resulting in lower fidelity).

**[1880]** Various packet coding approaches described below, or selection of configuration parameters of those approaches, address considerations that are particularly relevant to the nature of the characteristics of the data being transported. In some examples, different approaches or parameters are set in a single system based on a runtime determination of the nature of the characteristics of the data being transported.

Channel Characteristics

**[1881]** In general, the communication paths that link PC-TCP source and destination endpoints exhibit both relatively stationary or consistent channel characteristics, as well as transient characteristics. Relatively stationary or consistent channel characteristics can include, for example, capacity (e.g., maximum usable throughput), latency (e.g., transit time of packets from source to destination, variability in transit time), error rate (e.g., average packet erasure or error rate, burst characteristics of erasures/errors). In general, such relatively stationary or consistent characteristics may depend on the nature of the path, and more particularly on one or more of the links on the path. For example, a path with a link passing over a 4G cellular channel may exhibit very different characteristics than a path that passes over a cable television channel and/or a WiFi link in a home. As discussed further below, at least some of the approaches to packet coding attempt to address channel characteristic differences between types of communication paths. Furthermore, at least some of the approaches include aspects that track relatively slow variation in characteristics, for example, adapting to changes in average throughput, latency, etc.

**[1882]** Communication characteristics along a path may also exhibit substantial transient characteristics. Conventional communication techniques include aspects that address transient characteristics resulting from congestion along a communication path. It is well known that as congestion increases, for example at a node along a communication path, it is important that traffic is reduced at that node in order to avoid an unstable situation, for instance, with high packet loss resulting from buffer overruns, which then further increases data rates due to retransmission approaches. One common approach to addressing congestion-based transients uses an adaptive window size of "in flight" packets that have not yet been acknowledged by their destinations. The size of the window is adapted at each of the sources to avoid congestion-based instability, for example, by significantly reducing the size of the window upon detection of increased packet erasure rates.

**[1883]** In addressing communication over a variety of channels, it has been observed that transients in communication characteristics may not be due solely to conventional congestion effects, and that conventional congestion avoidance approaches may not be optimal or even desirable. Some effects that may affect communication characteristics, and that may therefore warrant adaptation of the manner in which data is transmitted can include one or more of the follow:

**[1884]** Effects resulting from cell handoff in cellular systems, including interruptions in delivery of packets or substantial reordering of packets delivered after handoff;

**[1885]** Effects resulting from "half-duplex" characteristics of certain wireless channels, for example, in WiFi channels in which return packets from a destination may be delayed until the wireless channel is acquired for upstream (i.e., portable device to access point) communication;

**[1886]** Effects of explicit data shaping devices, for example, intended to throttle certain classes of communication, for instance, based on a service provider's belief that that class of communication is malicious or is consuming more than a fair share of resources.

**[1887]** Although transient effects, which may not be based solely on congestion, may be tolerated using conventional congestion avoidance techniques, one or more of the approaches described below are particularly tailored to such classes of effects with the goal of maintaining efficient use of a channel without undue "over-reaction" upon detection of a transient situation, while still avoiding causing congestion-based packet loss.

Inter-Packet Coding

**[1888]** In general, the coding approaches used in embodiments described in this document make use of inter-packet coding in which redundancy information is sent over the channel such that the redundancy information in one packet is generally dependent on a set of other packets that have been or will be sent over the channel. Typically, for a set of N packets of information, a total of N+K packets are sent in a manner that erasure or any K of the packets allows reconstruction of the original N packets of information. In general, a group of N information packets, or a group of N+K packets including redundancy information (depending on context), is referred to below as a "block" or a "coding block". One example of such a coding includes N information packets without further coding, and then K redundancy packets, each of which depends on the N information packets. However it should be understood more than K of the packets (e.g., each of the N+K packets) may in some embodiments depend on all the N information packets.

Forward Error Correction and Repair Retransmission

**[1889]** Inter-packet coding in various embodiments described in this document use one or both of pre-emptive transmission of redundant packets, generally referred to as forward error correction (FEC), and transmission of redundant packets upon an indication that packets have or have a high probability of having been erased based on feedback, which is referred to below as repair and/or retransmission. The feedback for repair retransmission generally comes from the receiver, but more generally may come from a node or other channel element on the path to the receiver, or some network element having information about the delivery of packets along the path. In the FEC mode, K redundant packets may be transmitted in order to be tolerant of up to K erasures of the N packets, while in the repair mode, in some examples, for each packet that the transmitter believes

has been or has high probability of having been erased, a redundant packet it transmitted from the transmitter, such that if in a block of N packets, K packets are believed to have been erased based on feedback, the transmitter sends at least an additional K packets.

**[1890]** As discussed more fully below, use of a forward error correction mode versus a repair mode represents a tradeoff between use of more channel capacity for forward error correction (i.e., reduced throughout of information) versus incurring greater latency in the presence of erasures for repair retransmission. As introduced above, the data characteristics being transmitted may determine the relative importance of throughput versus latency, and the PC-TCP modules may be configured or adapted accordingly.

**[1891]** If on average the packet erasure rate E is less than K/(N+K), then "on average" the N+K packets will experience erasure of K or fewer of the packets and the remaining packets will be sufficient to reconstruct the original N. Of course even if E is not greater than K/(N+K), random variability, non-stationarity of the pattern of erasures etc. results in some fraction of the sets of N+K packets having greater than K erasures, so that there is insufficient information to reconstruct the N packets at the destination. Therefore, even using FEC, at least some groups of N information packets will not be reconstructable. Note, for example, with E=0.2, N=8, and K=2, even though only 2 erasures may be expected on average, the probability of more than 2 erasures is greater than 30%, and even with E=0.1 this probability is greater than 7%, therefore the nature (e.g., timing, triggering conditions etc.) of the retransmission approaches may be significant, as discussed further below. Also as discussed below, the size of the set of packets that are coded together is significant. For example, increasing N by a factor of 10 to K+N=100 reduces the probably of more than the average number of 20 erasures (i.e., too many erasures to reconstruct the N=80 data packets) from over 7% to less than 0.1%.

**[1892]** Also as discussed further below, there is a tradeoff between use of large blocks of packets (i.e., large N) versus smaller blocks. For a particular code rate R=N/(N+K), longer blocks yield a higher probability of being able to fully recover the N information packets in the presence of random errors. Accordingly, depending on the data characteristics, the PC-TCP modules may be configured to adapt to achieve a desired tradeoff.

**[1893]** In general, in embodiments that guarantee delivery of the N packets, whether or not FEC is used, repair retransmission approaches are used to provide further information for reconstructing the N packets. In general, in preferred embodiments, the redundancy information is formed in such a manner that upon an erasure of a packet, the redundancy information that is sent from the transmitter does not depend on the specific packets that were erased, and is nevertheless suitable for repairing the erasure independent of which packet was erased.

Random Linear Coding

**[1894]** In general, a preferred approach to inter-packet coding is based on Random Linear Network Coding (RLNC) techniques. However, it should be understood that although based on this technology, not all features that may be associated with this term are necessarily incorporated. In particular, as described above in the absence of intermediate nodes that perform recoding, there is not necessarily a "network" aspect to the approach. Rather, redundancy information is generally formed by combining the information packets into coded packets using arithmetic combinations, and more specifically, as sums of products of coefficients and representation of the information packets over arithmetic fields, such as finite fields (e.g., Galois Fields of order $p^n$). In general, the code coefficients are chosen from a sufficiently large finite field in a random or pseudo-random manner, or in another way that the combinations of packets have a very low probability or frequency of being linearly dependent. The code coefficients, or a compressed version (e.g., as a reference into a table shared by the transmitter and receiver), are included in each transmitted combination of data units (or otherwise communicated to the receiver) and used for decoding at the receiver. Very generally, the original information packets may be recovered at a receiver by inverting the arithmetic combinations. For example, a version of Gaussian Elimination may be used to reconstruct the original packets from the coded combinations. A key feature of this approach is that for a set of N information packets, as soon at the receiver has at least N linearly independent combinations of those information packets in received packets, it can reconstruct the original data units. The term "degree of freedom" is generally used below to refer to a number of independent linear combinations, such that if N degrees of freedom have been specified for N original packets, then the N original packets can be reconstructed; while if fewer than N degrees of freedom are available, it may not be possible to fully reconstruct any of the N original packets. If N+K linearly independent linear combinations are sent, then any N received combinations (i.e., N received degrees of freedom) are sufficient to reconstruct the original information packets.

**[1895]** In some examples, the N+K linearly independent combinations comprise N selections of the N "uncoded" information packets (essentially N−1 zero coefficients and one unit coefficient for each uncoded packet), and K coded packets comprising the random arithmetic combination with N non-zero coefficients for the N information packets. The N uncoded packets are transmitted first, so that in the absence of erasures they should be completely received as soon as possible. In the case of one erasure of the original N packets, the receiver must wait for the arrival of one redundant packet (in addition to the N−1 original packets), and once that packet has arrived, the erased packet may be reconstructed. In the case of forward error correction, the K redundant packets follow (e.g., immediately after) the information packets, and the delay incurred in reconstructing the erased information packet depends on the transmission time of packets. In the case of repair retransmission, upon detection of an erasure or high probability of an erasure, the receiver provides feedback to the transmitter, which sends the redundancy information upon receiving the feedback. Therefore, the delay in being able to reconstruct the erased packet depends on the round-trip-time from the receiver to the transmitter and back.

**[1896]** As discussed in more detail below, feedback from the receiver to the transmitter may be in the form of acknowledgments sent from the receiver to the transmitter. This feedback in acknowledgements at least informs the transmitter of a number of the N+K packets of a block that have been successfully received (i.e., the number of received degrees of freedom), and may provide further information

that depends on the specific packets that have been received at the receiver although such further information is not essential.

**[1897]** As introduced above, packets that include the combinations of original packets generally also include information needed to determine the coefficients used to combine the original packets, and information needed to identify which original packets were used in the combination (unless this set, such as all the packets of a block, is implicit). In some implementations, the coefficients are explicitly represented in the coded packets. In some embodiments, the coefficients are encoded with reference to shared information at the transmitter and the receiver. For instance, tables of pre-generated (e.g., random, pseudo random, or otherwise selected) coefficients, or sets of coefficients, may be stored and references into those tables are used to determine the values of the coefficients. The size of such a table determines the number of parity packets that can be generated while maintaining the linear independence of the sets of coefficients. It should be understood that yet other ways may be used to determine the coefficients.

**[1898]** Another feature of random linear codes is that packets formed as linear combinations of data units may themselves be additively combined to yield combined linear combinations of data units. This process is referred to in some instances as "recoding", as distinct from decoding and then repeating encoding.

**[1899]** There are alternatives to the use of RLNC, which do not necessarily achieve similar optimal (or provably optimum, or near optimal) throughput as RLNC, but that give excellent performance in some scenarios when implemented as described herein. For example, various forms of parity check codes can be used. Therefore, it should be understood that RLNC, or any particular aspect of RLNC, is not an essential feature of all embodiments described in this document.

Batch Transmission

**[1900]** As introduced above, in at least some applications, data to be transmitted from a transmitter to a receiver forms a batch (i.e., as opposed to a continuous stream), with an example of a batch being a file or a segment (e.g., a two second segment of multimedia) of a file.

**[1901]** In an embodiment of the PC-TCP modules, the batch is transferred from the transmitter to the receiver as a series of blocks, with each block being formed from a series of information packets. In general, each block has the same number of information packets, however use of same size blocks is not essential.

**[1902]** The transmitter PC-TCP module generally receives the data units from the source application and forms the information packets of the successive blocks of the batch. These information packets are queued at the transmitter and transmitted on the channel to the receiver. In general, at the transmitter, the dequeueing and transmission of packets to the receiver makes use of congestion control and/or rate control mechanisms described in more detail below. The transmitter PC-TCP also retains the information packets (or sufficient equivalent information) to construct redundancy information for the blocks. For instance the transmitter PC-TCP buffers the information packets for each block for which there remains the possibility of an unrecovered erasure of a packet during transit from the transmitter to the receiver.

**[1903]** In general, the receiver provides feedback to the transmitter. Various approaches to determining when to provide the feedback and what information to provide with the feedback are described further below. The feedback provides the transmitter with sufficient information to determine that a block has been successfully received and/or reconstructed at the receiver. When such success feedback for a block has been received, the transmitter no longer needs to retain the information packets for the block because there is no longer the possibility that redundancy information for the block will need to be sent to the receiver.

**[1904]** The feedback from the receiver to the transmitter may also indicate that a packet is missing. Although in some cases the indication that a packet is missing is a premature indication of an erasure, in this embodiment the transmitter uses this missing feedback to trigger sending redundant information for a block. In some examples, the packets for a block are numbered in sequence of transmission, and the feedback represents the highest number received and the number of packets (i.e., the number of degrees of freedom) received (or equivalently the number of missing packets or remaining degrees of freedom needed) for the block. The transmitter addresses missing packet feedback for a block through the transmission of redundant repair blocks, which may be used by the receiver to reconstruct the missing packets and/or original packets of the block.

**[1905]** As introduced above, for each block, the transmitter maintains sufficient information to determine the highest index of a packet received at the receiver, the number of missing packets transmitted prior to that packet, and the number of original or redundancy packets after the highest index received that have been transmitted (i.e., are "in flight" unless erased in transit) or queued for transmission at the transmitter.

**[1906]** When the transmitter receives missing packet feedback for a block, if the number of packets for the block that are "in flight" or queue would not be sufficient if received successfully (or are not expected to be in view of the erasure rate), the transmitter computes (or retrieves precomputed) a new redundant packet for the block and queues it for transmission. Such redundancy packets are referred to as repair packets. In order to reduce the delay in reconstructing a block of packets at the receiver, the repair packets are sent preferentially to the information packets for later blocks. For instance, the repair packets are queued in a separate higher-priority queue that is used to ensure transmission of repair packets preferentially to the queue of information packets.

**[1907]** In some situations, feedback from the receiver may have indicated that a packet is missing. However, that packet may later arrive out of order, and therefore a redundant packet for that block that was earlier computed and queued for transmission is no longer required to be delivered to the receiver. If that redundant packet has not yet been transmitted (i.e., it is still queued), that packet may be removed from the queue thereby avoiding wasted use of channel capacity for a packet that will not serve to pass new information to the receiver.

**[1908]** In the approach described above, redundancy packets are sent as repair packets in response to feedback from the receiver. In some examples, some redundancy packets are sent pre-emptively (i.e., as forward error correction) in order to address possible packet erasures. One approach to send such forward error correction packets for each block. However, if feedback has already been received at the

transmitter that a sufficient number of original and/or coded packets for a block have been received, then there is no need to send further redundant packets for the block.

**[1909]** In an implementation of this approach, the original packets for all the blocks of the batch are sent first, while repair packets are being preferentially sent based on feedback from the receiver. After all the original packets have been transmitted, and the queue of repair packets is empty, the transmitter computes (or retrieves precomputed) redundancy packets for blocks for which the transmitter has not yet received feedback that the blocks have been successfully received, and queues those blocks as forward error correction packets for transmission in the first queue. In general, because the repair blocks are sent with higher priority that the original packets, the blocks for which success feedback has not yet been received are the later blocks in the batch (e.g., a trailing sequence of blocks of the batch).

**[1910]** In various versions of this approach, the number and order of transmission of the forward error correction packets are determined in various ways. A first way uses the erasure rate to determine how many redundant packets to transmit. One approach is to send at least one redundant packet for each outstanding block. Another approach is to send a number of redundancy packets for each outstanding block so that based on an expectation of the erasure rate of the packets that are queued and in flight for the block will yield a sufficient number of successfully received packets in order to reconstruct the block. For example, if a further n packets are needed to reconstruct a block (e.g., a number $n<N$ packets of the original N packets with N−n packets having been erased), then n+k packets are sent, for instance, with $n+k \geq n/E$, where E is an estimate of the erasure rate on the channel.

**[1911]** Another way of determining the number and order of forward error correction packets addresses the situation in which a block transmission time is substantially less than the round-trip-time for the channel. Therefore, the earliest of the blocks for which the transmitter has not received success feedback may in fact have the success feedback in flight from the receiver to the transmitter, and therefore sending forward error correction packets may be wasteful. Similarly, even if feedback indicating missing packet feedback for a block is received sufficiently early, the transmitter may still send a repair packet without incurring more delay in complete reconstruction of the entire batch than would be achieved by forward error correction.

**[1912]** In an example, the number of forward error correction packets queued for each block is greater for later blocks in the batch than for earlier ones. A motivation for this can be understood by considering the last block of the batch where it should be evident that it is desirable to send a sufficient number of forward error correction packets to ensure high probability of the receiver having sufficient information to reconstruct the block without the need from transmission of a repair packet and the associated increase in latency. On the other hand, it is preferable to send fewer forward error correction packets for the previous (or earlier) block because in the face of missing packet feedback from the receiver, the transmitter may be able to send a repair packet before forward error correction packets for all the later blocks have been sent, thereby not incurring a delay in overall delivery of the batch.

**[1913]** In one implementation, after all the original packets have been sent, and the transmitter is in the forward error correction phase in which it computes and sends the forward error correction packets, if the transmitter receives a missing packet feedback from the receiver, it computes and sends a repair packet for the block in question (if necessary) as described above, and clears the entire queue of forward error correction packets. After the repair packet queue is again empty, the transmitter again computes and queues forward error correction packets for the blocks for which it has not yet received success feedback. In an alternative somewhat equivalent implementation, rather than clearing the forward error correction queue upon receipt of a missing packet feedback, the transmitter removes forward error correction packets from the queue as they are no longer needed based on feedback from the receiver. In some examples, if success feedback is received for a block for which there are queued forward error correction packets, those forward error correction packets are removed from the queue. In some examples, the feedback from the receiver may indicate that some but not all of the forward error correction packets in the queue are no longer needed, for example, because out-of-order packets were received but at least some of the original packets are still missing.

**[1914]** An example of the way the transmitter determines how many forward error correction packets to send is that the transmitter performs a computation:

$$(N+g(i)-a_i)/(1-p)-f_i$$

where

**[1915]** p=smoothed loss rate,

**[1916]** N=block size,

**[1917]** i=block index defined as number of blocks from last block,

**[1918]** $a_i$=number of packets asked from block i,

**[1919]** $f_i$=packets in-flight from block i, and

**[1920]** g(i)=a decreasing function of i,

to determine the number of FEC packets for a block.

**[1921]** In some examples, g(i) is determined as a maximum of a configurable parameter, m and N−i. In some examples, g(i) is determined as N−p(i) where p is a polynomial, with integer rounding as needed

**[1922]** It should be understood that in some alternative implementations, at least some forward error correction packets may be interspersed with the original packets. For example, if the erasure rate for the channel is relatively high, then at least some number of redundancy packets may be needed with relatively high probability for each block, and there is an overall advantage to preemptively sending redundant FEC packets as soon as possible, in addition to providing the mechanism for feedback based repair that is described above.

**[1923]** It should be also understood that use of subdivision of a batch into blocks is not necessarily required in order to achieve the goal of minimizing the time to complete reconstruction of the block at the receiver. However, if the forward error correction is applied uniformly to all the packets of the batch, then the preferential protection of later packets would be absent, and therefore, latency caused by erasure of later packets may be greater than using the approach described above. However, alternative approaches to non-uniform forward error protection (i.e., introduction of forward error correction redundancy packets) may be used. For example, in the block based approach described above, packets of the later blocks each contribute to a greater number of forward error correction packets than do earlier ones, and an alter-

native approach to achieving this characteristic may be to use a non-block based criterion to construction of the redundancy packets in the forward error correction phase. However, the block based approach described above has advantages of relative simplicity and general robustness, and therefore even if marginally "suboptimal" provides an overall advantageous technical solution to minimizing the time to complete reconstruction within the constraint of throughput and erasure on the channel linking the transmitter and receiver.

**[1924]** Another advantage of using a block-based approach is that, for example, when a block within the batch, say the $m^{th}$ block of M blocks of the batch has an erasure, the repair packet that is sent from the transmitter depends only on the N original packets of the $m^{th}$ block. Therefore, as soon as the repair packet arrives, and the available (i.e., not erased) N−1 packets of the block arrive, the receiver has the information necessary to repair the block. Therefore, by constructing the repair packet without contribution of packets in later blocks of the batch, the latency of the reconstruction of the block is reduced. Furthermore, by having the repair packets depend on only N original packets, the computation required to reconstruct the packets of the block is less than if the repair packets depend on more packets.

**[1925]** It should be understood that even in the block based transmission of a batch of packets, the blocks are not necessarily uniform in size, and are not necessarily disjoint. For example, blocks may overlap (e.g., by 50%, 75%, etc.) thereby maintaining at least some of the advantages of reduced complexity in reconstruction and reduced buffering requirements as compared to treating the batch as one block. An advantage of such overlapping blocks may be a reduced latency in reconstruction because repair packets may be sent that do not require waiting for original packets at the receiver prior to reconstruction. Furthermore, non-uniform blocks may be beneficial, for example, to increase the effectiveness of forward error correction for later block in a batch by using longer blocks near the end of a batch as compared to near the beginning of a batch.

**[1926]** In applications in which the entire batch is needed by the destination application before use, low latency of reconstruction may be desirable to reduce buffering requirements in the PC-TCP module at the receiver (and at the transmitter). For example, all packets that may contribute to a later received repair packet are buffered for their potential future use. In the block based approach, once a block is fully reconstructed, then the PC-TCP module can deliver and discard those packets because they will not affect future packet reconstruction.

**[1927]** Although described as an approach to delivery of a batch of packets, the formation of these batches may be internal to the PC-TCP modules, whether or not such batches are formed at the software application level. For example, the PC-TCP module at the transmitter may receive the original data units that are used to form the original packets via a software interface from the source application. The packets are segmented into blocks of N packets as described above, and the packets queued for transmission. In one embodiment, as long as the source application provides data units sufficiently quickly to keep the queue from emptying (or from emptying for a threshold amount of time), the PC-TCP module stays in the first mode (i.e., prior to sending forward error correction packets) sending repair packets as needed based on feedback information from the receiver. When there is a lull in the source application providing data units, then the PC-TCP module declares that a batch has been completed, and enters the forward error correction phase described above. In some examples, the batch formed by the PC-TCP module may in fact correspond to a batch of data units generated by the source application as a result of a lull in the source application providing data units to the PC-TCP module while it computes data units for a next batch, thereby inherently synchronizing the batch processing by the source application and the PC-TCP modules.

**[1928]** In one such embodiment, the PC-TCP module remains in the forward error correction mode for the declared batch until that entire batch has been successfully reconstructed at the receiver. In another embodiment, if the source application begins providing new data units before the receiver has provided feedback that the previous batch has been successfully reconstructed, the transmitter PC-TCP module begins sending original packets for the next batch at a lower priority than repair or forward error correction packets for the previous batch. Such an embodiment may reduce the time to the beginning of transmission of the next batch, and therefore reduces the time to successful delivery of the next batch.

**[1929]** In the embodiments in which the source application does not necessarily provide the data in explicit batches, the receiver PC-TCP module provides the data units in order to the destination application without necessarily identifying the block or batch boundaries introduced at the transmitter PC-TCP module. That is, in at least some implementations, the transmitter and receiver PC-TCP modules provide a reliable channel for the application data units without exposing the block and batch structure to the applications.

**[1930]** As described above for certain embodiments, the transmitter PC-TCP module reacts to missing packet feedback from the receiver PC-TCP module to send repair packets. Therefore, it should be evident that the mechanism by which the receiver sends such feedback may affect the overall behavior of the protocol. For example, in one example, the receiver PC-TCP module sends a negative acknowledgment as soon as it observes a missing packet. Such an approach may provide the lowest latency for reconstruction of the block. However, as introduced above, missing packets may be the result of out-of-order delivery. Therefore, a less aggressive generation of missing packet feedback, for example, by delay in transmission of a negative acknowledgment, may reduce the transmission of unnecessary repair packets with only a minimal increase in latency in reconstruction of that block. However, such delay in sending negative acknowledgements may have an overall positive impact on the time to successfully reconstruct the entire block because later blocks are not delayed by unnecessary repair packets. Alternative approaches to generation of acknowledgments are described below.

**[1931]** In some embodiments, at least some of the determination of when to send repair packets is performed at the transmitter PC-TCP. For example, the receiver PC-TCP module may not delay the transmission of missing packet feedback, and it is the transmitter PC-TCP module that delays the transmission of a repair packet based on its weighing of the possibility of the missing packet feedback being based on out-of-order delivery as opposed to erasure.

**[1932]** Protocol Parameters

**[1933]** Communication between two PC-TCP endpoints operates according to parameters, some of which are maintained in common by the endpoints, and some of which are local to the sending and/or the receiving endpoint. Some of these parameters relate primarily to forward error correction aspects of the operation. For example, such parameters include the degree of redundancy that is introduced through the coding process. As discussed below, further parameters related to such coding relate to the selection of packets for use in the combinations. A simple example of such selection is segmentation of the sequence of input data units into "frames" that are then independently encoded. In addition to the number of such packets for combination (e.g., frame length), other parameters may relate to overlapping and/or interleaving of such frames of data units and/or linear combinations of such data units.

**[1934]** Further parameters relate generally to transport layer characteristics of the communication approach. For example, some parameters relate to congestion avoidance, for example, representing a size of a window of unacknowledged packets, transmission rate, or other characteristics related to the timing or number of packets sent from the sender to the receiver of the PC-TCP communication.

**[1935]** As discussed further below, communication parameters (e.g., coding parameters, transport parameters) may be set in various ways. For example, parameters may be initialized upon establishing a session between two PC-TCP endpoints. Strategies for setting those parameters may be based on various sources of information, for example, according to knowledge of the communication path linking the sender and receiver (e.g., according to a classification of path type, such as 3G wireless versus cable modem), or experienced communication characteristics in other sessions (e.g., concurrent or prior sessions involving the same sender, receiver, communication links, intermediate nodes, etc.). Communication parameters may be adapted during the course of a communication session, for example, in response to observed communication characteristics (e.g., congestion, packet loss, round-trip time, etc.) Transmission control

**[1936]** Some aspects of the PC-TCP approaches relate to control of transmission of packets from a sender to a receiver. These aspects are generally separate from aspects of the approach that determine what is sent in the packets, for example, to accomplish forward error correction, retransmission, or the order in which the packets are sent (e.g., relative priority of forward error correction packets version retransmission packets). Given a queue of packets that are ready for transmission from the sender to the receiver, these transmission aspects generally relate to flow and/or congestion control.

Congestion Control

**[1937]** Current variants of TCP, including binary increase congestion control (BIC) and cubic-TCP, have been proposed to address the inefficiencies of classical TCP in networks with high losses, large bandwidths and long round-trip times. BIC-TCP and CUBIC algorithms have been used because of their stability. After a backoff, BIC increases the congestion window linearly then logarithmically to the window size just before backoff (denoted by $W_{max}$) and subsequently increases the window in an anti-symmetric fashion exponentially then linearly. CUBIC increases the congestion window following backoff according to a cubic function with inflection point at $W_{max}$. These increase functions cause the congestion window to grow slowly when it is close to $W_{max}$, promoting stability. On the other hand, other variants such as HTCP and FAST TCP have the advantage of being able to partially distinguish congestion and non-congestion losses through the use of delay as a congestion signal.

**[1938]** An alternative congestion control approach is used in at least some embodiments. In some such embodiments, we identify a concave portion of the window increase function as $W_{concave}(t)=W_{max}+c_1(t-k)^3$ and a convex portion of the window increase function as $W_{convex}(t)+W_{max}+c_2(t-k)^3$ where $c_1$ and $c_2$ are positive tunable parameters and

$$k = \sqrt[3]{((W_max - W)/c_1)}$$

and W is the window size just after backoff.

**[1939]** This alternative congestion control approach can be flexibly tuned for different scenarios. For example, a larger value of $c_1$ causes the congestion window to increase more rapidly up to $W_{max}$ and a large value of $c_2$ causes the congestion window to increase more rapidly beyond $W_{max}$.

**[1940]** Optionally, delay is used as an indicator to exit slow start and move to the more conservative congestion avoidance phase, e.g. when a smoothed estimate of RTT exceeds a configured threshold relative to the minimum observed RTT for the connection. We can also optionally combine the increase function of CUBIC or other TCP variants with the delay-based backoff function of HTCP.

**[1941]** In some embodiments, backoff is smoothed by allowing a lower rate of transmission until the number of packets in flight decreases to the new window size. For instance, a threshold, n, is set such that once n packets have been acknowledged following a backoff, then one packet is allowed to be sent for every two acknowledged packets, which is roughly half of the previous sending rate. This is akin to a hybrid window and rate control scheme. Transmission rate control

Pacing Control by Sender

**[1942]** In at least some embodiments, pacing is used to regulate and/or spread out packet transmissions, making the transmission rate less bursty. While pacing can help to reduce packet loss from buffer overflows, previous implementations of pacing algorithms have not shown clear advantages when comparing paced TCP implementations to non-paced TCP implementations. However, in embodiments where the data packets are coded packets as described above, the combination of packet coding and pacing may have advantages. For example, since one coded packet may be used to recover multiple possible lost packets, we can use coding to more efficiently recover from any spread out packet losses that may result from pacing. In embodiments, the combination of packet coding and pacing may have advantages compared to uncoded TCP with selective acknowledgements (SACK).

**[1943]** Classical TCP implements end-to-end congestion control based on acknowledgments. Variants of TCP designed for high-bandwidth connections increase the congestion window (and consequently the sending rate) quickly to probe for available bandwidth but this can result in bursts of packet losses when it overshoots, if there is insufficient buffering in the network.

**[1944]** A number of variants of TCP use acknowledgment feedback to determine round-trip time and/or estimate available bandwidth, and they differ in the mechanisms with which this information is used to control the congestion window and/or sending rate. Different variants have scenarios in which they work better or worse than others.

**[1945]** In one general approach used in one or more embodiments, a communication protocol may use smoothed statistics of intervals between acknowledgments of transmitted packets (e.g., a smoothed "ack interval") to guide a transmission of packets, for example, by controlling intervals (e.g., an average interval or equivalently an average transmission rate) between packet transmissions. Broadly, this guiding of transmission intervals is referred to herein as "pacing".

**[1946]** In some examples, the pacing approach is used in conjunction with a window-based congestion control algorithm. Generally, the congestion window controls the number of unacknowledged packets that can be sent, in some examples using window control approaches that are the same or similar to those used in known variants of the Transmission Control Protocol (TCP). In embodiments, the window control approach is based on the novel congestion control algorithms described herein.

**[1947]** A general advantage of one or more aspects is to improve functioning of a communication system, for instance, as measured by total throughput, or delay and/or variation in delay. These aspects address a technical problem of congestion, and with it packet loss, in a network by using "pacing" to reduce that congestion.

**[1948]** An advantage of this aspect is that the separate control of pacing can prevent packets in the congestion window from being transmitted too rapidly compared to the rate at which they are getting through to the other side. Without separate pacing control, at least some conventional TCP approaches would permit bursts of overly rapid transmission of packets, which might result in packet loss at an intermediate node on the communication path. These packet losses may be effectively interpreted by the protocol as resulting from congestion, resulting in the protocol reducing the window size. However, the window size may be appropriate, for example, for the available bandwidth and delay of the path, and therefore reducing the window size may not be necessary. On the other hand, reducing the peak transmission rate can have the effect of avoiding packet loss, for example, by avoiding overflow of intermediate buffers on the path.

**[1949]** Another advantage of at least some implementations is prevention of large bursts of packet losses under convex window increase functions for high-bandwidth scenarios, by providing an additional finer level of control over the transmission process.

**[1950]** At least some implementations of the approach can leverage the advantages of existing high-bandwidth variants of TCP such as H-TCP and CUBIC, while preventing large bursts of packet losses under their convex window increase functions and providing a more precise level of control. For example, pacing control may be implemented to pace the rate of providing packets from the existing TCP procedure to the channel, with the existing TCP procedure typically further or separately limiting the presentation of packets to the communication channel based, for instance, on its window-based congestion control procedure.

**[1951]** In practice, a particular example in which separating pacing from window control has been observed to significantly outperform conventional TCP on 4G LTE.

**[1952]** Referring to FIG. **214**, in one example, a source application **1010** passes data to a destination application **1090** over a communication channel **1050**. Communication from the source application **1010** passes to a transport layer **1020**, which maintains a communication session with a corresponding transport layer **1080** linked to the destination application **1090**. In general, the transport layers may be implemented as software that executes on the same computer as their corresponding applications, however, it should be recognized that, for instance through the use of proxy approaches, the applications and the transport layer elements that are shown may be split over separate coupled computers. In embodiments, when a proxy is running on a separate machine or device from the application, the application may use the transport layer on its machine to communicate with the proxy layer.

**[1953]** In FIG. **214**, the transport layer **1020** at the source application includes a window control and retransmission element **1030**. In some implementations, this element implements a conventional Transport Control Protocol (TCP) approach, for instance, implementing H-TCP or CUBIC approaches. In other implementations, this element implements the novel congestion control algorithms described herein. The transport layer **1080** at the destination may implement a corresponding element **1060**, which may provide acknowledgements of packets to the window control and retransmission element **1030** at the source. In general, element **1030** may implement a window-based congestion control approach based on acknowledgements that are received at the destination, however it should be understood that no particular approach to window control is essential, and in some implementations, element **1030** can be substituted with another element that implements congestion control using approaches other than window control.

**[1954]** Functionally, one may consider two elements of the protocol as being loss recovery and rate/congestion control. Loss recovery can be implemented either using conventional retransmissions or using coding or as a combination of retransmission and coding. Rate/congestion control may aim to avoid overrunning the receiver and/or the available channel capacity, and may be implemented using window control with or without pacing, or direct rate control.

**[1955]** The channel **1050** coupling the transport layers in general may include lower layer protocol software at the source and destination, and a series of communication links coupling computers and other network nodes on a path from the source to the destination.

**[1956]** As compared to conventional approaches, as shown in FIG. **192**, a rate control element **1040** may be on the path between the window control and retransmission element **1030** and the channel **1050**. This rate control element may monitor acknowledgements that are received from the destination, and may pass them on to the window control and retransmission element **1030**, generally without delay. The rate control element **1040** receives packets for transmission on the channel **1050** from the window control and retransmission element **1030**, and either passes them directly to the channel **1050**, or buffers them to limit a rate of transmission onto the channel. For example, the rate

control element **1040** may require a minimum interval between successive packets, or may control an average rate over multiple packets.

**[1957]** In embodiments, the acks that are transmitted on a return channel, from the destination to the source, may also be paced, and may also utilize coding to recover from erasures and bursty losses. In embodiments, packet coding and transmission control of the acks may be especially useful if there is congestion on the return channel.

**[1958]** In one implementation, the rate control element **1040** may maintain an average (i.e., smoothed) inter-packet delivery interval, estimated based on the acknowledgement intervals (accounting for the number of packets acknowledged in each ack). In some implementations this averaging may be computed as a decaying average of past sample inter-arrival times. This can be refined by incorporating logic for discarding large sample values based on the determination of whether they are likely to have resulted from a gap in the sending times or losses in the packet stream, and by setting configurable upper and lower limits on the estimated interval commensurate with particular characteristics of different known networks. The rate control element **1040** may then use this smoothed inter-acknowledgement time to set a minimum inter-transmission time, for example, as a fraction of the inter-acknowledgement time. This fraction can be increased with packet loss and with rate of increase of RTT (which may be indicators that the current sending rate may be too high), and decreased with rate of decrease of RTT under low loss, e.g. using a control algorithm such as proportional control whose parameters can be adjusted to trade off between stability and responsiveness to change. Upper and lower limits on this fraction can be made configurable parameters, say 0.2 and 0.95. Transmission packets are then limited to be presented to the channel **1050** with inter-transmission times of at least this set minimum. In other implementations inter-transmission intervals are controlled to maintain a smoothed average interval or rate based on a smoothed inter-acknowledgement interval or rate.

**[1959]** In addition to the short timescale adjustments of the pacing interval with estimated delivery interval, packet loss rate and RTT described above, there can also be a longer timescale control loop that modulates the overall aggressiveness of the pacing algorithm based on a smoothed loss rate calculated over a longer timescale, with, a higher loss rate indicating that pacing may be too aggressive. The longer timescale adjustment can be applied across short duration connections by having the client maintain state across successive connections and include initializing information in subsequent connection requests. This longer timescale control may be useful for improving adaptation to diverse network scenarios that change dynamically on different timescales.

**[1960]** Referring to FIG. **215**, in some implementations, the communication channel **1050** spans multiple nodes **1161**, **1162** in one or an interconnection of communication networks **1151**, **1152**. In FIG. **193**, the source application **1010** is illustrated as co-resident with the transport layer **1020** on a source computer **1111**, and similarly, the transport layer **1080** is illustrated as co-resident on a destination computer **1190** with the destination application **1090**.

**[1961]** It should be recognized that although the description above focuses on a single direction of communication, in general, a bidirectional implementation would include a corresponding path from the destination application to the source application. In some implementations, both directions include corresponding rate control elements **1040**, while in other applications, only one direction (e.g., from the source to the destination application) may implement the rate control. For example, introduction of the rate control element **1040** at a server, or another device or network node on the path between the source application and the transport layer **1080** at the destination, may not require modification of the software at the destination Pacing by receiver

**[1962]** As described above, the sender can use acks to estimate the rate/interval with which packets are reaching the receiver, the loss rate and the rate of change of RTT, and adjust the pacing interval accordingly. However, this estimated information may be noisy if acks are lost or delayed. On the other hand, such information can be estimated more accurately at the receiver with OWTT in place of RTT. By basing the pacing interval on the rate of change of OWTT rather than its actual value, the need for synchronized clocks on sender and receiver may be obviated. The pacing interval can be fed back to the sender by including it as an additional field in the acks. The choice as to whether the pacing calculations are done at the sender or the receiver, or done every n packets rather than upon every packet reception, may also be affected by considerations of sender/receiver CPU/load.

Error Control

**[1963]** Classical TCP performs poorly on networks with packet losses. Congestion control can be combined with coding such that coded packets are sent both for forward error correction (FEC) to provide protection against an anticipated level of packet loss, as well as for recovering from actual losses indicated by feedback from the receiver.

**[1964]** While the simple combination of packet coding and congestion control has been suggested previously, the prior art does not adequately account for differences between congestion-related losses, bursty and/or random packet losses. Since congestion-related loss may occur as relatively infrequent bursts, it may be inefficient to protect against this type of loss using FEC.

**[1965]** In at least some embodiments, the rates at which loss events occur are estimated. A loss event may be defined as either an isolated packet loss or a burst of consecutive packet losses. In some examples, the source PC-TCP may send FEC packets at the estimated rate of loss events, rather than the estimated rate of packet loss. This embodiment is an efficient way to reduce non-useful FEC packets, since it may not be disproportionately affected by congestion-related loss.

**[1966]** In an exemplary embodiment, the code rate and/or packet transmission rate of FEC can be made tunable in order to trade-off between the useful throughput seen at the application layer (also referred to as goodput) and recovery delay. For instance, the ratio of the FEC rate to the estimated rate of loss events can be made a tunable parameter that is set with a priori knowledge of the underlying communications paths or dynamically adjusted by making certain measurements of the underlying communications paths.

**[1967]** In another exemplary embodiment, the rate at which loss bursts of up to a certain length occur may be estimated, and appropriate burst error correcting codes for FEC, or codes that correct combinations of burst and isolated errors, may be used.

**[1968]** In another exemplary embodiment, the FEC for different blocks can be interleaved to be more effective against bursty loss.

**[1969]** In other exemplary embodiments, data packets can be sent preferentially over FEC packets. For instance, FEC packets can be sent at a configured rate or estimated loss rate when there are no data packets to be sent, and either not sent or sent at a reduced rate when there are data packets to be sent. In one implementation, FEC packets are placed in a separate queue which is cleared when there are data packets to be sent.

**[1970]** In other exemplary embodiments, the code rate/amount of FEC in each block and/or the FEC packet transmission rate can be made a tunable function of the block number and/or the number of packets in flight relative to the number of unacknowledged degrees of freedom of the block, in addition to the estimated loss rate. FEC packets for later blocks can be sent preferentially over FEC for earlier blocks, so as to minimize recovery delay at the end of a connection, e.g., the number of FEC packets sent from each block can be a tunable function of the number of blocks from the latest block that has not been fully acknowledged. The sending interval between FEC packets can be an increasing function of the number of packets in flight relative to the number of unacknowledged degrees of freedom of the corresponding block, so as to trade-off between sending delay and probability of losing FEC packets in scenarios where packet loss probability increases with transmission rate.

**[1971]** In other exemplary embodiments, a variable randomly chosen fraction of the coding coefficients of a coded packet can be set to 1 or 0 in order to reduce encoding complexity without substantially affecting erasure correction performance. In a systematic code, introducing 0 coefficients only after one or more densely coded packets (i.e. no or few 0 coefficients) may be important for erasure correction performance. For instance, an initial FEC packet in a block could have each coefficient set to 1 with probability 0.5 and to a uniformly random value from the coding field with probability 0.5. Subsequent FEC packets in the block could have each coefficient set to 0 with probability 0.5 and to uniformly random value with probability 0.5.

Packet Reordering

**[1972]** As introduced above, packets may be received out of order on some networks, for example, due to packets traversing multiple paths, parallel processing in some networking equipment, reconfiguration of a path (e.g., handoff in cellular networks). Generally, conventional TCP reacts to out of order packets by backing off the size of the congestion window. Such a backoff may unnecessarily hurt performance if there is no congestion necessitating a backoff.

**[1973]** In some embodiments, in an approach to handling packet reordering that does not result from congestions, a receiver observing a gap in the sequence numbers of its received packets may delay sending an acknowledgment for a limited time. When a packet is missing, the receiver does not immediately know if the packet has been lost (erased), or merely reordered. The receiver delays sending an acknowledgement that indicates the gap to see if the gap is filled by subsequent packet arrivals. In some examples, upon observing a gap, the receiver starts a first timer for a configurable "reordering detection" time interval, e.g. 20 ms. If a packet from the gap is subsequently received within this time interval, the receiver starts a second timer for a configurable "gap filling" time interval, e.g. 30 ms. If the first timer or the second timer expire prior to the gap being filled, an acknowledgement that indicates the gap is sent to the source.

**[1974]** Upon receiving the acknowledgment that indicates the gap in received packets the source, in at least some embodiments, the sender determines whether a repair packet should be sent to compensate for the gap in the received packets, for example, if a sufficient number of FEC packets have not already been sent.

**[1975]** In another aspect, a sender may store relevant congestion control state information (including the congestion window) prior to backoff, and a record of recent packet losses. If the sender receives an ack reporting a gap/loss and then subsequently one or more other acks reporting that the gap has been filled by out of order packet receptions, any backoff caused by the earlier ack can be reverted by restoring the stored state from before backoff.

**[1976]** In another aspect, a sender observing a gap in the sequence numbers of its received acks may delay congestion window backoff for a limited time. When an ack is missing, the sender does not immediately know if a packet has been lost or if the ack is merely reordered. The sender delays backing off its congestion window to see if the gap is filled by subsequent ack arrivals. In some examples, upon observing a gap, the sender starts a first timer for a configurable "reordering detection" time interval, e.g. 20 ms. If an ack from the gap is subsequently received within this time interval, the sender starts a second timer for a configurable "gap filling" time interval, e.g. 30 ms. If the first timer or the second timer expires prior to the gap being filled, congestion window backoff occurs.

**[1977]** In some examples, instead of using time intervals, packet sequence numbers are used. For example, sending of an ack can be delayed until a packet which is a specified number of sequence numbers ahead of the reference lost packet is received. Similarly, backing off can be delayed until an acknowledgment of a packet which is a specified number of sequence numbers ahead of the reference lost packet is received. In some examples, these approaches have the advantage of being able to take into account subsequently received/acknowledged reordered packets by shifting the sequence number of the reference lost packet as holes in the packet sequence get filled.

**[1978]** These methods for correcting packet reordering may be especially useful for multipath versions of the protocol, where there may be a large amount of reordering.

Acknowledgements

Delayed Acknowledgements

**[1979]** In at least some implementations, conventional TCP sends one acknowledgment for every two data packets received. Such delayed acking reduces ack traffic compared to sending an acknowledgment for every data packet. This reduction in ack traffic is particularly beneficial when there is contention on the return channel, such as in Wi-Fi networks, where both data and ack transmissions contend for the same channel.

**[1980]** It is possible to reduce ack traffic further by increasing the ack interval to a value n>2, i.e. sending one acknowledgment for every n data packets. However, reducing the frequency with which acks are received by the sender

can cause delays in transmission (when the congestion window is full) or backoff (if feedback on losses is delayed), which can hurt performance.

**[1981]** In one aspect, the sender can determine whether, or to what extent, delayed acking should be allowed based in part on its remaining congestion window (i.e. its congestion window minus the number of unacknowledged packets in flight), and/or its remaining data to be sent. For example, delayed acking can be disallowed if there is any packet loss, or if the remaining congestion window is below some (possibly tunable) threshold. Alternatively, the ack interval can be reduced with the remaining congestion window. As another example, delayed acking can be allowed if the amount of remaining data to be sent is smaller than the remaining congestion window, but disallowed for the last remaining data packet so that there is no delay in acknowledging the last data packet. This information can be sent in the data packets as a flag indicating whether delayed acking is allowed, or for example, as an integer indicating the allowed ack interval.

**[1982]** Using relevant state information at the sender to influence delayed acking may allow an increase in the ack interval beyond the conventional value of 2, while mitigating the drawbacks described above that a larger ack interval across the board might have.

**[1983]** To additionally limit the ack delay, each time an ack is sent, a delayed ack timer can be set to expire with a configured delay, say 25 ms. Upon expiration of the timer, any data packets received since the last ack may be acknowledged, even if fewer packets than the ack interval n have arrived. If no packets have been received since the last ack, an ack may be sent upon receipt of the next data packet.

Parameter Control

Initialization

**[1984]** In some embodiments, to establish a session parameters for the PC-TCP modules are set to a predefine set of default parameters. In other embodiments, approaches that attempt to select better initial parameters are used. Approaches include use of parameter values from other concurrent or prior PC-TCP sessions, parameters determined from characteristics of the communication channel, for example, selected from stored parameters associated with different types of channels, or parameters determined by the source or destination application according to the nature of the data to be transported (e.g., batch versus stream).

Tunable Coding

**[1985]** Referring to FIG. **216**, in an embodiment in which parameters are "tuned" (e.g., through feedback from a receiver or on other considerations) a server application **2411** is in communication with a client application **2491** via a communication channel **2452**. In one example, the server application **2411** may provide a data stream encoding multimedia content (e.g., a video) that is accepted by the client application **2491**, for example, for presentation to a user of the device on which the client application is executing. The channel **2452** may represent what is typically a series of network links, for example including links of one or more types, including:

**[1986]** a link traversing private links on a server local area network,

**[1987]** a link traversing the public Internet,

**[1988]** a link traversing a fixed (i.e., wireline) portion of a cellular telephone network,

**[1989]** and a link traversing a wireless radio channel to the user's device (e.g., a cellular telephone channel or satellite link or wireless LAN).

**[1990]** The channel **2452** may be treated as carrying a series of data units, which may but do not necessarily correspond directly to Internet Protocol (IP) packets. For example, in some implementations multiple data units are concatenated into an IP packet, while in other implementations, each data unit uses a separate IP packet or only part of an IP packet. It should be understood that in yet other implementations, the Internet Protocol is not used—the techniques described below do not depend on the method of passing the data units over the channel **2452**.

**[1991]** A transmitter **2421** couples the server application **2411** to the channel **2452**, and a receiver **2481** couples the channel **2452** to the client application **2491**. Generally, the transmitter **2421** accepts input data units from the server application **2481**. In general, these data units are passed over the channel **2452**, as well as retained for a period of time in a buffer **2423**. From time to time, an error control (EC) component **2425** may compute a redundancy data unit from a subset of the retained input data units in the buffer **2423**, and may pass that redundancy data unit over the channel **2452**. The receiver **2481** accepts data units from the channel **2452**. In general, the channel **2452** may erase and reorder the data units. Erasures may correspond to "dropped" data units that are never received at the receiver, as well as corrupted data units that are received, but are known to have irrecoverable errors, and therefore are treated for the most part as dropped units. The receiver may retain a history of received input data units and redundancy data units in a buffer **2483**. An error control component **2485** at the receiver **2481** may use the received redundancy data units to reconstruct erased input data units that may be missing in the sequence received over the channel. The receiver **2481** may pass the received and reconstructed input data units to the client application. In general, the receiver may pass these input data units to the client application in the order they were received at the transmitter.

**[1992]** In general, if the channel has no erasures or reordering, the receiver can provide the input data units to the client application with delay and delay variation that may result from traversal characteristics of the channel. When data units are erased in the channel **2452**, the receiver **2481** may make use of the redundancy units in its buffer **2483** to reconstruct the erased units. In order to do so, the receiver may have to wait for the arrival of the redundancy units that may be useful for the reconstruction. The way the transmitter computes and introduces the redundancy data units generally affects the delay that may be introduced to perform the reconstruction.

**[1993]** The way the transmitter computes and introduces the redundancy data units as part of its forward error correction function can also affect the complexity of the reconstruction process at the receiver, and the utilization of the channel. Furthermore, regardless of the nature of the way the transmitter introduces the redundancy data units onto the channel, statistically there may be erased data units for which there is insufficient information in the redundancy

data units to reconstruct the erased unit. In such cases, the error control component **2485** may request a retransmission of information from the error control component **2425** of the transmitter **2421**. In general, this retransmitted information may take the form of further redundancy information that depends on the erased unit. This retransmission process introduces a delay before the erased unit is available to the receiver. Therefore, the way the transmitter introduces the redundancy information also affects the statistics such as how often retransmission of information needs to be requested, and with it the delay in reconstructing the erased unit that cannot be reconstructed using the normally introduced redundancy information.

**[1994]** In some embodiments, the error control component **2485** may provide information to the error control component **2425** to affect the way the transmitter introduces the redundancy information. In general, this information may be based on one or more of the rate of (or more generally the pattern of) erasures on units on the channel, rate of (or more generally timing pattern of) and the state of the available units in the buffer **2483** and/or the state of unused data in the client application **2491**. For example, the client application may provide a "play-out time" (e.g., in milliseconds) of the data units that the receiver has already provided to the client application such that if the receiver were to not send any more units, the client application would be "starved" for input units at that time. Note that in other embodiments, rather than or in addition to receiving information from the receiver, the error control component **2425** at the transmitter may get feedback from other places, for example, from instrumented nodes in the network that pass back congestion information.

**[1995]** Referring to FIG. **217**, a set of exemplary ways that the transmitter introduces the redundancy data units into the stream of units passed over the channel makes use of alternating runs of input data units and redundancy data units. In FIG. **217**, the data units that are "in flight" on the channel **2452** are illustrated passing from left to right in the figure. The transmitter introduces the units onto the channel as sequences of p input units alternating with sequences of q redundancy units. Assuming that the data units are the same sizes, this corresponds to a rate R=p/(p+q) code. In an example with p=4 and q=2 and the code has rate R=2/3.

**[1996]** In a number of embodiments the redundancy units are computed as random linear combinations of past input units. Although the description below focuses on such approaches, it should be understood that the overall approach is applicable to other computations of redundancy information, for example, using low density parity check (LDPC) codes and other error correction codes. In the approach shown in FIG. **217**, each run of q redundancy units is computed as a function of the previous D input units, where in general but not necessarily D>p. In some cases, the most recent d data units transmitted are not used, and therefore the redundancy data units are computed from a window of D−d input data units. In FIG. **217**, d=2, D=10, and D−d=8. Note that because D−d>p, the windows of input data units used for computation of the successive runs of redundancy units overlap, such that any particular input data unit will in general contribute to redundancy data units in more than one of the runs of q units on the channel.

**[1997]** In FIG. **217**, as well as in FIGS. **218-219** discussed below, buffered input data units (i.e., in buffer **2423** shown in FIG. **216**) are shown on the left with time running from the bottom (past) to the top (future), with each set of D−d units used to compute a run of q redundant units illustrated with arrows. The sequence of transmitted units, consisting of runs of input data units alternating with runs of redundant units, is shown with time running from right to left (i.e., later packets on the left). Data units that have been received and buffered at the receiver are shown on the right (oldest on the bottom), redundant units computed from runs of D−d input units indicated next to arrows representing the ranges of input data units used to compute those data units. Data units and ranges of input data units that have not yet been received are illustrated using dashed lines.

**[1998]** FIGS. **218** and **219** show different selections of parameters. In FIG. **218**, p=2 and q=1 and the code has a rate R=2/3, which is the same rate at the selection of parameters in FIG. **217**. Also as in the FIG. **217** selection, d=2, D=10, and D−d=8. Therefore, a difference between FIG. **217** and FIG. **218** is not necessarily a degree of forward error protection (although the effect of burst erasures may be somewhat different in the two cases). More importantly, the arrangement in FIG. **218** generally provides a lower delay from the time of an erased data unit to the arrival of redundancy information to reconstruct that unit, as compared to the arrangement in FIG. **217**. On the other hand, the complexity of processing at the receiver may be greater in the arrangement of FIG. **218** as compared to the arrangement of FIG. **216**, in part because redundancy units information uses multiple different subsets of the input data units, which may require more computation when reconstructing an erased data unit. Turning to FIG. **219**, at another extreme, a selection of parameters uses longer blocks with a selection D=8 and q=4. Again, this code has a rate R=2/3. In general, this selection of parameters will incur greater delay in reconstruction of an erased data unit as compared to the selections of parameters shown in FIGS. **217** and **218**. On the other hand, reconstruction of up to four erasures per block of D=8 input data units is relatively less complex than would be required by the selections shown in FIGS. **217** and **218**.

**[1999]** For a particular rate of code (e.g., rate R=2/3), in an example, feedback received may result in changes of the parameters, for example, between (p,q)=(2,1) or (4,2) or (8,4) depending on of the amount of data buffered at the receiver, and therefore depending on the tolerance of the receiver to reconstruction delay.

**[2000]** Note that it is not required that q=p(1−R)/R is an integer, as it is in the examples shown in FIGS. **25-27**. In some embodiments, the length of the run of redundant units varies between $q=\lceil p(1-R)/R \rceil$ and $q=\lfloor p(1-R)/R \rfloor$ so that the average is ave(q)=p(1−R)/R.

**[2001]** In a variant of the approach described above, different input data units have different "priorities" or "importances" such that they are protected to different degrees than other input data units. For example, in video coding, data units representing an independently coded video frame may be more important than data units representing a differentially encoded video frame. For example, if the priority levels are indexed i=1, 2, . . . , then a proportion $\rho_i \leq 1$ where $\Sigma_i \rho_i = 1$, of the redundancy data units may be computed using data units with priority≤i. For example, for a rate R code, with blocks of input data units of length p, on average $\rho_i$ p(1−R)/R redundancy data units per block are computed from input data units with priority≤i.

**[2002]** The value of D should generally be no more than the target playout delay of the streaming application minus an appropriate margin for communication delay variability. The playout delay is the delay between the time a message packet is transmitted and the time it should be available at the receiver to produce the streaming application output. It can be expressed in units of time, or in terms of the number of packets transmitted in that interval. D can be initially set based on the typical or desired playout delay of the streaming application, and adapted with additional information from the receiver/application. Furthermore, choosing a smaller value reduces the memory and complexity at the expense of erasure correction capability.

**[2003]** The parameter d specifies the minimum separation between a message packet and a parity involving that message packet. Since a parity involving a message packet that has not yet been received is not useful for recovering earlier message packets involved in that parity, setting a minimum parity delay can improve decoding delay when packet reordering is expected/observed to occur, depending partly also on the parity interval.

**[2004]** Referring to FIG. **220**, in an example implementation making use of the approaches described above, the server application **2411** is hosted with the transmitter **2421** at a server node **810**, and the client application **2491** is hosted at one or a number of client nodes **891** and **892**. Although a wide variety of types of data may be transported using the approaches described above, one example is streaming of encoded multimedia (e.g., video and audio) data. The communication channel **2452** (see FIG. **216**) is made up in this illustration as a path through one or more networks **851-852** via nodes **861-862** in those respective networks. In some implementations, the receiver is hosted at a client node **891** being hosted on the same device as the client application **490**.

Cross-Session Parameter Control

**[2005]** In some embodiments, the control of transport layer sessions uses information across connections, for example, across concurrent sessions or across sessions occurring at different times.

**[2006]** Standard TCP implements end-to-end congestion control based on acknowledgments. A new TCP connection that has started up but not yet received any acknowledgments uses initial configurable values for the congestion window and retransmission timeout. These values may be tuned for different types of network settings.

**[2007]** Some applications, for instance web browser applications, may use multiple connections between a client application (e.g., the browser) and a server application (e.g., a particular web server application at a particular server computer). Conventionally, when accessing the information to render a single web "page", the client application may make many separate TCP sessions between the client and server computers, and using conventional TCP control, each session is controlled substantially independently. This independent control includes separate congestion control.

**[2008]** One approach to addressing technical problems that are introduced by having such multiple sessions is the SPDY Protocol (see, e.g., SPDY Protocol—Draft 3.1, accessible at http://www.chromium.org/spdy/spdy-protocol/spdy-protocol-draft3-1). The SPDY protocol is an application layer protocol that manipulates HTTP traffic, with particular goals of reducing web page load latency and improving web security. Generally, SPDY effectively provides a tunnel for the HTTP and HTTPS protocols. When sent over SPDY, HTTP requests are processed, tokenized, simplified and compressed. The resulting traffic is then sent over a single TCP session, thereby avoiding problems and inefficiencies involved in use of multiple concurrent TCP sessions between a particular client and server computer.

**[2009]** In a general aspect, a communication system maintains information related to communication between computers or network nodes. For example, the maintained information can include bandwidth to and/or from the other computer, current or past congestion window sizes, pacing intervals, packet loss rates, round-trip time, timing variability, etc. The information can include information for currently active sessions and/or information about past sessions. One use of the maintained information may be to initialize protocol parameters for a new session between computers for which information has been maintained. For example, the congestion window size or a pacing rate for a new TCP or UDP session may be initialized based on the congestion window size, pacing interval, round-trip time and loss rate of other concurrent or past sessions.

**[2010]** Referring to FIG. **221**, communication system **1200** maintains information regarding communication sessions between endpoints. For example, these communication sessions pass via a network **1250**, and may pass between a server **1210**, or a proxy **1212** serving one or more servers **1214**, and a client **1290**. In various embodiments, this information may be saved in various locations. In some implementations, a client **1290** maintains information about current or past connections. This information may be specific to a particular server **1210** or proxy **1212**. This information may also include aggregated information. For example, in the case of a smartphone on a cellular telephone network, some of the information may be generic to connections from multiple servers and may represent characteristics imposed by the cellular network rather than a particular path to a server **1210**. In some implementations, a server **1210** or proxy **1212** may maintain the information based on its past communication with particular clients **1290**. In some examples, the clients and servers may exchange the information such that is it distributed throughout the system **1200**. In some implementations, the information may be maintained in databases that are not themselves endpoints for the communication sessions. For instance, it may be beneficial for a client without relevant stored information to retrieve information from an external database.

**[2011]** In one use scenario, when a client **1290** seeks to establish a communication session (e.g., a transport layer protocol session), it consults its communication information **1295** to see if it has current information that is relevant to the session it seeks to establish. For example, the client may have other concurrent sessions with a server with which it wants to communicate, or with which it may have recently had such sessions. As another example, the client **1290** may use information about other concurrent or past sessions with other servers. When the client **1290** sends a request to a server **1210** or a proxy **1212** to establish a session, relevant information for that session is also made available to one or both of the endpoints establishing the session. There are various ways in which the information may be made available to the server. For example the information may be included with the request itself. As another example, the

server may request the information if it does not already hold the information in its communication information **1215**. As another example, the server may request the information from a remote or third party database, which has been populated with information from the client or from servers that have communicated with the client. In any case, the communication session between the client and the server is established using parameters that are determined at least in part by the communication information available at the client and/or server.

**[2012]** In some examples, the communication session may be established using initial values of packet pacing interval, congestion window, retransmission timeout and forward error correction. Initial values suitable for different types of networks (e.g. Wi-Fi, 4G), network operators and signal strength can be prespecified, and/or initial values for successive connections can be derived from measured statistics of earlier connections between the same endpoints in the same direction. For example:

**[2013]** The initial congestion window can be increased from its default value if the packet throughput of the previous connection is sufficiently larger than the ratio of the default initial congestion window to the minimum round-trip time of the previous connection. The congestion window can subsequently be adjusted downwards if the initial received acks from the new connection indicate that the available rate has decreased compared to the previous connection.

**[2014]** The initial pacing interval can be set e.g. as MAX (k1*congestion window/previous round-trip time, k2/previous packet throughput), where k1 and k2 are configurable parameters, or, with receiver pacing, as k* previous pacing interval, where k increases with the loss rate of the previous connection.

**[2015]** Forward error correction parameters such as code rate can be set as k*previous loss rate, where k is a configurable parameter. The initial retransmission timeout can be increased from its default value if the minimum round-trip time of the previous connection is larger.

Multi-Path

**[2016]** FIG. **222** shows the use of multiple paths between the server and client to deliver the packet information. These multiple paths may be over similar or different network technologies with similar or different average bandwidth, round trip delay, packet jitter rate, packet loss rate and cost. Examples of multiple paths include wired/fiber networks, geostationary, medium and low earth orbit satellites, WiFi, and cellular networks. In this example, the transmission control layer can utilize a single session to distribute the N packets in the block being transmitted over the multiple paths according to a variety of metrics (average bandwidth of each path, round trip delay of each path, packet jitter rate, packet loss rate of each path, and cost). The N packets to be transmitted in each block can be spread across each path in a manner that optimizes the overall end-to-end throughput and costs between server and client. The number of packets sent on each path can be dynamically controlled such that the average relative proportions of packets sent on each path are in accordance with the average relative available bandwidths of the paths, e.g. using back pressure-type control whereby packets are scheduled so as to approximately equalize queue lengths associated with the different paths.

**[2017]** For each path, the algorithms described above that embody transmission and congestion control, forward error correction, sender based pacing, receiver based pacing, stream based parameter tuning, detection and correction for missing and out of order packets, use of information across multiple TCP connections, fast connection start and stop, TCP/UDP fallback, cascaded coding, recoding by intermediate nodes, and coding of the ACKs can be employed to improve the overall end-to-end throughput over the multiple paths between the source node and destination node. When losses are detected and FEC is used, the extra coded packets can be sent over any or all of the paths. For instance, coded packets sent to repair losses can be sent preferentially over lower latency paths to reduce recovery delay. The destination node will decode any N of packets that are received over all of the paths and assemble them into a block of N original packets by recreating any missing packets from the ones received. If less than N different coded packets are received across all paths, then the destination node will request the number of missing packets x where x=N−number of packets received be retransmitted. Any set of x different coded packet can be retransmitted over any path and then used to reconstruct the missing packets in the block of N.

**[2018]** When there are networks with large differences in round trip time (RTT) latencies, the packets received over the lower RTT latencies will need to be buffered at the receiver in order to be combined with the higher RTT latency packets. The choice of packets sent on each path can be controlled so as to reduce the extent of reordering and associated buffering on the receiver side, e.g. among the packets available to be sent, earlier packets can be sent preferentially on higher latency paths and later packets can be sent preferentially on lower latency paths.

**[2019]** Individual congestion control loops may be employed on each path to adapt to the available bandwidth and congestion on the path. An additional overall congestion control loop may be employed to control the total sending window or rate across all the paths of a multi-path connection, for fairness with single-path connections.

**[2020]** Referring to FIG. **223**, a communication system utilizes a first, satellite data path **3102** having a relatively high round trip time latency and a second, DSL data path **3104** having a relatively low round trip time latency. When a user application **3106** sends a request to stream video content, a content server **3108** (e.g., video streaming service) provides some or all of the requested video content to a remote proxy **3110** which generates encoded video content **3112** for transmission to the user application **3106**. Based on the RTT latencies of the first data path **3102** and the second data path **3104**, the remote proxy **3110** splits the encoded video content **3112** into an initial portion **3114** (e.g., the first 5 seconds of video content) and a subsequent portion **3116** (e.g., the remaining video content). The remote proxy **3110** then causes transmission of the initial portion **3114** over the second, low latency data path **3104** and transmission of the subsequent portion **3116** over the first, high latency data path **3102**.

**[2021]** Referring to FIG. **224**, due to the lower latency of the second data path **3104**, the initial portion **3114** of the video content arrives at the local proxy **3118** quickly, where it is decoded and sent to the user application **3106** for presentation to a viewer. The subsequent portion **3116** of the video content is still traversing the first, high latency data

path **3102** at the time that presentation of the initial portion **3114** of the video content to the viewer commences.

**[2022]** Referring to FIG. **225**, during presentation of the decoded initial portion **3114** of video content to the viewer, the subsequent portion **3116** of the video content arrives at the local proxy **3118** where it is decoded and sent to the user application **3106** before presentation of the initial portion **3114** of the video content to the viewer is complete. In some examples, sending the initial portion **3114** of the video content over the low latency data path **3104** and sending a subsequent portion **3116** of the video content over the high latency data path **3102** avoids lengthy wait times between when a user requests a video and when the user sees the video (as would be the case if using satellite only communication) while minimizing data usage over the low latency data path (which may be more costly to use).

**[2023]** In some examples, other types of messages may be preferentially sent over the low latency data path. For example, acknowledgement messages, retransmission messages, and/or other time critical messages may be transmitted over the low latency data path while other data messages are transmitted over the higher latency data path.

**[2024]** In some examples, additional data paths with different characteristics (e.g., latencies) can also be included in the communication system, with messages being balanced over any of a number of data paths based on characteristics of the messages (e.g., message type) and characteristics of the data paths.

**[2025]** In some examples, other types of messages may be preferentially sent over the low latency data path. For example, acknowledgement messages, retransmission messages, and/or other time critical messages may be transmitted over the low latency data path while other data messages are transmitted over the higher latency data path.

**[2026]** In some examples, additional data paths with different characteristics (e.g., latencies) can also be included in the communication system, with messages being balanced over any of a number of data paths based on characteristics of the messages (e.g., message type) and characteristics of the data paths.

Alternatives and Implementations

**[2027]** In the document above, certain features of the packet coding and transmission control protocols are described individually, or in isolation, but it should be understood that there are certain advantages that may be gained by combining multiple features together. Preferred embodiments for the packet coding and transmission control protocols described may depend on whether the transmission links and network nodes traversed between communication session end-points belong to certain fiber or cellular carriers (e.g. AT&T, T-Mobile, Sprint, Verizon, Level 3) and/or end-user Internet Service Providers (ISPs) (e.g. AT&T, Verizon, Comcast, Time Warner, Century Link, Charter, Cox) or are over certain wired (e.g. DSL, cable, fiber-to-the-curb/home (FTTx)) or wireless (e.g. WiFi, cellular, satellite) links. In embodiments, probe transmissions may be used to characterize the types of network nodes and transmission links communication signals are traversing and the packet coding and transmission control protocol may be adjusted to achieve certain performance. In some embodiments, data transmissions may be monitored to characterize the types of network nodes and transmission links communication signals are traversing and the packet coding and transmission control protocol may be adjusted to achieve certain performance. In at least some embodiments, quantities such as round-trip-time (RTT), one-way transmission times (OWTT), congestion window, pacing rate, packet loss rate, number of overhead packets, and the like may be monitored continuously, intermittently, in response to a trigger signal or event, and the like. In at least some embodiments, combinations of probe transmissions and data transmissions may be used to characterize network and communication session performance in real time.

**[2028]** In at least some embodiments, network and communication parameters may be stored in the end-devices of communication sessions and/or they may be stored in network resources such as servers, switches, nodes, computers, databases and the like. These network and communication parameters may be used by the packet coding and transmission control protocol to determine initial parameter settings for the protocol to reduce the time it may take to adjust protocol parameters to achieve adequate performance. In embodiments, the network and communication parameters may be tagged and/or associated with certain geographical locations, network nodes, network paths, equipment types, carrier networks, service providers, types of transmission paths and the like. In embodiments, the end-devices may be configured to automatically record and/or report protocol parameter settings and to associate those settings with certain locations determined using GPS-type location identification capabilities resident in those devices. In embodiments, the end-devices may be configured to automatically record and/or report protocol parameters settings and to associate those settings with certain carrier networks, ISP equipment traversed, types of wired and/or wireless links and the like.

**[2029]** In at least some embodiments, a packet coding and transmission control protocol as described above may adjust more than one parameter to achieve adequate or improved network performance. Improved network performance may be characterized by less delay in delivering data packets, less delay in completing file transfers, higher quality audio and video signal delivery, more efficient use of network resources, less power consumed by the end-users, more end-users supported by existing hardware resources and the like.

**[2030]** In at least some embodiments, certain modules or features of the packet coding and transmission control protocol may be turned on or off depending on the data's path through a network. In some embodiments, the order in which certain features are implemented or controlled may be adjusted depending on the data's path through a network. In some embodiments, the probe transmissions and/or data transmissions may be used in open-loop or closed-loop control algorithms to adjust the adjustable parameters and/or the sequence of feature implementation in the packet coding and transmission control protocol.

**[2031]** It should be understood that examples which involve monitoring to control the protocol can in general involve aspects that are implemented at the source, the destination, or at a combination of the source and the destination Therefore, it should be evident that although embodiments are described above in which features are described as being implemented at particular endpoints, alternative embodiments involve implementation of those features at different endpoints. Also, as described above, monitoring to control the protocol can in general involve

aspects that are implemented intermediate nodes or points in the network. Therefore, it should be evident that although embodiments are described above in which features are described as being implemented at particular endpoints, alternative embodiments involve implementation of those features at different nodes, including intermediate nodes, throughout the network.

**[2032]** In addition to the use of monitored parameters for control of the protocols, the data may be used for other purposes. For example, the data may support network analytics that are used, for example, to control or provision the network as a whole.

**[2033]** The PC-TCP approaches may be adapted to enhance existing protocols and procedures, and in particular protocols and procedures used in content delivery, for example, as used in coordinated content delivery networks. For instance, monitored parameters may be used to direct a client to the server or servers that can deliver an entire unit of content as soon as possible rather than merely direct the client to a least loaded server or to server accessible over a least congested path. A difference in such an new approach is that getting an entire file as fast as possible may require packets to be sent from multiple servers and/or servers that are not geographically the closest, over multiple links, and using new acknowledgement protocols that coordinate the incoming data while requiring a minimum of retransmissions or FEC overhead. Coordinating may include waiting for gaps in strings of packets (out-of-order packets) to be filled in by later arriving packets and/or by coded packets. In addition, the PC-TCP approaches may improve the performance of wireless, cellular, and satellite links, significantly improving the end-to-end network performance.

**[2034]** Some current systems use "adaptive bit rates" to try to preserve video transmission through dynamic and/or poorly performing links. In some instances, the PC-TCP approaches described above replace adaptive bit rate schemes and may be able to present a very high data rate to a user for a long period of time. In other instances, the PC-TCP approaches are used in conjunction with currently-available adaptive bit rate schemes to support higher data rates on average than could be supported by adaptive bit rate schemes alone. In some instances, the PC-TCP approaches may include integrated bit rate adjustments as part of its feature set and may use any and/or all of the previously identified adjustable parameters and/or monitored parameters to improve the performance of a combined PC-TCP and bit-rate adaptive solution.

**[2035]** Certain embodiments described following relate to heating, and more particularly to cooking and recipes, including by use of intelligent devices, and in a context of the IoT.

**[2036]** With the emergence of the IoT, opportunities exist for unlocking value surrounding a wide range of devices. To date, such opportunities have been limited for many users, particularly in rural areas of developing countries, by the absence of robust energy and communications infrastructure. The same problems with infrastructure also limit the ability of users to access more basic features of certain devices; for example, rather than using modern cooking systems, such as with gas burners, many rural users still cook over fires, using wood or other biofuel. A need exists for devices that meet basic needs, such as for modern cooking capability, without reliance on infrastructure, and an opportunity exists to expand the capabilities of basic cooking devices to provide a much wider range of capabilities that will serve other needs and provide other benefits to users of cooking devices.

**[2037]** Many industrial environments are similarly isolated from conventional energy and communications infrastructure. For example, offshore drilling platforms, industrial mining environments, pipeline operations, large-scale agricultural environments, marine exploration environments (e.g., deep ocean exploration), marine and other large-scale transportation environments (such as ships, boats, submarines, aircraft and spacecraft) are often entirely isolated from the traditional power grid, or require very expensive power transmission cables to receive power from traditional sources. Other industrial environments are isolated for other reasons, such as to maintain "clean room" isolation during semi-conductor manufacturing, pharmaceutical preparation, or handling of hazardous materials, where interfaces like outlets and switches for delivering conventional power potentially provide points of penetration or escape for contaminants or biologically active materials. For these environments, a need exists for cooking systems that provide improved independence from conventional power sources. Also, in many of these environments fire is a significant hazard, among other things because of the presence of fire hazards and significant restrictions on egress for personnel. In those cases, storage of fuel for cooking in an environment presents a risk, because the fuel can exacerbate the extent of a fire, potentially resulting in disastrous consequences. Accordingly, such platforms and environments, such as oil drilling platforms, may use diesel generators to power cooking and other systems, because diesel is perceived as presenting lower risk than propane, gasoline, or other fuel sources; however, diesel fuel also burns and remains a significant hazard A need exists for safer mechanisms for providing cooking capability in isolated industrial environments.

**[2038]** Intelligent cooking systems are disclosed herein, including an intelligent cooking system that is provided with processing, communications, and other information technology components, for remote monitoring and control and various value-added features and services, embodiments of which use an electrolyzer, optionally a solar-powered electrolyzer, to produce hydrogen as an on-demand fuel stream for a heating element, such as a burner, of the cooking system.

**[2039]** Embodiments of cooking systems disclosed herein include ones for consumer and commercial use, such as for cooking meals in homes and in restaurants, which may include various embodiments of cooktops, stoves, toasters, ovens, grills and the like. Embodiments of cooking systems also include industrial cooking systems, such as for heating, drying, curing, and cooking not only food products and ingredients, but also a wide variety of other products and components that are manufactured in and/or used in the industrial environments. These may include systems and components used in assembly lines (such as for heating, drying, curing, or otherwise treating parts or materials at one stage of production, such as to treat coatings, polymers, or the like that are coated, dispersed, painted, or otherwise disposed on components), in semi-conductor manufacturing and preparation (such as for heating or curing layers of a semi-conductor process, including in robotic assembly processes), in tooling processes (such as for curing injection molds and other molds, tools, dies, or the like), in extrusion

processes (such as for curing, heating or otherwise treating results of extrusion), and many others. These may also include systems and components used in various industrial environments for servicing personnel, such as on ships, submarines, offshore drilling platforms, and other marine platforms, on large equipment, such as on mining or drilling equipment, cranes, or agricultural equipment, in energy production environments, such as oil, gas, hydro-power, wind power, solar power, and other environments. Accordingly, while certain embodiments are disclosed for specific environments, references to cooking systems should be understood to encompass any of these consumer, commercial and industrial systems for cooking, heating, curing, and treating, except where context indicates otherwise.

**[2040]** Provided herein is an intelligent cooking system leveraging hydrogen technology plus cloud-based value-added-services derived from profiling, analytics, and the like. The smart hydrogen technology cooking system provides a standardized framework enabling other intelligent devices, such as smart-home devices and IoT devices to connect to the platform to further enrich the overall intelligence of contextual knowledge that enables providing highly relevant value-added-services. The intelligent cooking system device (referred to herein in some cases as the "cooktop"), may be enabled with processing, communications, and other information technology components and interfaces for enabling a variety of features, benefits, and value added services including ones based on user profiling, analytics, remote monitoring, remote processing and control, and autonomous control. Interfaces that allow machine-to-machine or user-to-machine communication with other devices and the cloud (such as through application programming interfaces) enables the cooking system to contribute data that is valuable for analytics (e.g., on users of the cooking system and on various consumer, commercial and industrial processes that involve the cooking system), as well as for monitoring, control and operation of other devices and systems. Through similar interfaces, the monitoring, control and/or operation of the cooking system, and its various capabilities, can benefit from or be based on data received from other devices (e.g., IoT devices) and from other data sources, such as from the cloud. For example, the cooking system may track its usage, such as to determine when to send a signal for refueling the cooking system itself, to send a signal for re-supplying one or more ingredients, components or materials (such as based on detected patterns of usage of the same over time periods), to determine and provide guidance on usage of the cooking system (such as to suggest training or improvements in usage to improve efficiency or efficacy), and the like. These may include results based on applying machine learning to the use of the fuel, the use of the cooking system, or the like.

**[2041]** In embodiments, the intelligent cooking system may be fueled by a hydrogen generator, referred to herein in some cases as the electrolyzer, an independent fuel source that does not require traditional connections to the electrical power grid, to sources of gas (e.g., natural gas lines), or to periodic sources of supply of conventional fuels (such as refueling oil, propane, diesel, or other fuel tanks) The electrolyzer may operate on a water source to separate hydrogen and oxygen components and subsequently provide the hydrogen component as a source of fuel, such as an on-demand source of fuel, for the intelligent cooking system. In embodiments, the electrolyzer may be powered by a renewable energy source, such as a solar power source, a wind power source, a hydropower source, or the like, thereby providing complete independence from the need for traditional power infrastructure. Methods and systems describing the design, manufacturing, assembly, deployment, and use of an electrolyzer are included herein. Among other benefits, the electrolyzer allows storage of water, rather than flammable materials like oil, propane, and diesel, as a source of energy for powering cooking systems in various isolated or sensitive industrial environments, such as on or in ships, submarines, drilling platforms, mining environments, pipeline environments, exploration environments, agricultural environments, clean room environments, air- and space-craft environments, and others. Intelligent features of the cooking system can include control of the electrolyzer, such as remote and/or autonomous control, such as to provide a precise amount of hydrogen fuel (converted from water) at the exact point and time it is required. In embodiments, mechanisms may be provided for capturing and returning products of the electrolyzer, such as to return any unused hydrogen and oxygen into water form (or directing them for other use, such as using them as a source of oxygen for breathing).

**[2042]** Methods and systems describing the design, manufacturing, assembly, deployment, and use of a smart hydrogen-based cooking system are included herein. Processing hardware and software modules for operating various capabilities of the cooking system may be distributed, such as having modules or components that are located in subsystems of the cooking system (e.g., the burners or other heating elements, temperature controls, or the like), having modules or components located in proximity to a user interface for the cooking system (e.g., associated with a control panel), having modules or components located in proximity to a communications port for the cooking system (e.g., an integrated wireless access point, cellular communications chip, or the like, or a docking port for a communications devices, such as a smart phone), having modules or components located in nearby devices, such as other smart devices (e.g., a NEST® thermostat), gateways, access points, beacons, or the like, and/or having modules or components located on servers, such as in the cloud or in a hosted remote control facility.

**[2043]** In embodiments, the cooking system may have a mobile docking facility, such as for docking a smart phone or other control device (such as a specialized device used in an industrial process, such as a processor-enabled tool or piece of equipment), which may include power for charging the smart phone or other device, as well as data communications between the cooking system and the smart phone, such as to allow the smart phone to be used (such as via an app, browser feature, or control feature of the phone) as a controller for the cooking system.

**[2044]** In embodiments, the cooking system may include various hardware components, which may include associated sensors for monitoring operation, processing and data storage capabilities, and communication capabilities. The hardware components may include one or more burners or heating elements, (e.g., gas burners, electric burners, induction burners, convection elements, grilling elements, radiative elements, and the like), one or more fuel conduits, one or more level indicators for indicating fuel level, one or more safety detectors (such as gas leak detectors, temperature sensors, smoke detectors, or the like). In embodiments,

a gas burner may include an on-demand gas-LPG hybrid burner, which can burn conventional fuel like liquid propane, but which can also burn fuel generated on demand, such as hydrogen produced by the electrolyzer. In embodiments, the burner may be a consumer cooktop burner having an appropriate power capability, such as being able to produce 20,000 British Thermal Unit ("BTU").

**[2045]** In embodiments, the cooking system may include a user interface that facilitates intuitive, contextual, intelligence-driven, and personalized experience, embodied in a dashboard, wizard, application interface (optionally including or integrating with one more associated smartphone tablet or browser-based applications or interfaces for one or more IoT devices), control panel, touch screen display, or the like. The user interface may include distributed components as described above for other software and hardware components. The application interface may include interface elements appropriate for cooking foods (such are recipes) or for using the cooking system for various consumer, commercial or industrial processes (such as recipes for making semi-conductor elements, for curing a coating or injection mold, and many others).

**[2046]** Methods and systems describing the design, manufacturing, assembly, deployment and use of a solar-powered hydrogen production facility in conjunction with a hydrogen-based cooking system are included herein.

**[2047]** Methods and systems describing the design, manufacturing, assembly, deployment and use of a commercial hydrogen-based cooking system that is suitable for use in a range of restaurants, cafeterias, mobile kitchens, and the like are included herein.

**[2048]** Methods and systems describing the design, manufacturing, assembly, deployment and use of an industrial hydrogen-based cooking system that is suitable for use as a food cooking system in various isolated industrial environments are included herein.

**[2049]** Methods and systems describing the design, manufacturing, assembly, deployment and use of an industrial hydrogen-based cooking system that is suitable for use as a heating, drying, curing, treating or other cooking system in various industrial environments are included herein, such as for manufacturing and treating components and materials in industrial production processes, including automated, robotic processes that may include system elements that connect and coordinate with the intelligent cooking system, including in machine-to-machine configurations that enable application of machine learning to the system.

**[2050]** Methods and systems describing the design, manufacturing, assembly, deployment and use of a low-pressure hydrogen storage system are described herein. The low-pressure hydrogen storage system may be combined with solar-powered hydrogen generation. In embodiments, the cooking system may receive fuel from the low-pressure hydrogen storage tank, which may safely store hydrogen produced by the electrolyzer. In embodiments, the hydrogen may be used immediately upon completion of electrolyzing, such that no or almost no hydrogen fuel needs to be stored.

**[2051]** Methods and systems describing the architecture, design, and implementation of a cloud-based platform for providing value-added-services derived from profiling, analytics, and the like in conjunction with a smart hydrogen-based cooking system are included herein. The cloud-based platform may further provide communications, synchronization among smart-home devices and third parties, security of electronic transactions and data, and the like. In embodiments, the cooking system may comprise a connection to a smart home, including to one or more gateways, hubs, or the like, or to one or more IoT devices. The cooking system may itself comprise a hub or gateway for other IoT devices, for home automation functions, commercial automation functions, industrial automation functions, or the like.

**[2052]** Methods and systems describing an intelligent user interface for a cloud-based platform for providing value-added services ("VAS") in conjunction with a smart hydrogen-based cooking system are included herein. The intelligent user interface may comprise an electronic wizard that may provide a contextual and intelligence driven personalized experience dashboard for computing devices that connect to a smart-home network or a commercial or industrial network based around the smart hydrogen-based cooking system. The architecture, design and implementation of the platform may be described herein.

**[2053]** Methods and systems for configuring, deploying, and providing value added services via a cloud-based platform that operates in conjunction with a smart hydrogen-based cooking system and a plurality of interconnected devices (e.g., mobile devices, Internet servers, and the like) to prepare profiling, analytics, intelligence, and the like for the VAS are described herein. In embodiments, the cooking system may include various VAS, such as ones delivered by a cloud-based platform and/or other IoT devices. For example, among many possibilities, the cooking system may provide recipes, allow ordering of ingredients, components or materials, track usage of ingredients to prompt re-orders, allow feedback on recipes, provide recommendations for recipes (including based on other users, such as using collaborative filtering), provide guidance on operation, or the like. The architecture, design, and implementation of these methods and systems and of the value-added-services themselves may further be described herein.

**[2054]** In embodiments, through a user interface, such as a wizard, various benefits, features, and services may be enabled, such as various cooking system utilities (e.g., a liquid propane gas gauge utility, a cooking assistance utility, a detector utility (such as for leakage, overheating, or smoke, or the like), a remote control utility, or the like). Services for shopping (e.g., a shopping cart or food ordering service), for health (such as providing health indices for foods, and personalized suggestions and recommendations), for infotainment (such as playing music, videos or podcasts while cooking), for nutrition (such as providing personalized nutrition information, nutritional search capabilities, or the like) and shadow cooking (such as providing remote materials on how to cook, as well as enabling broadcasting of the user, such as in a personalized cooking channel that is broadcast from the cooking system, or the like).

**[2055]** Methods and systems for profiling, analytics, and intelligence related to deployment, use, and service of a plurality of hydrogen-based cooking systems that are deployed in a range of environments including urban, rural, commercial, and industrial settings are described herein. Urban settings may include rural villages, low cost housing arrangements, apartments, housing projects, and the like where several end users (e.g., individual households, common kitchens, and the like) may be physically proximal (e.g., apartments in a building, and the like). The physical proximity can facilitate shared access to platform components, such as a hydrolyser or low pressure stored hydrogen,

and the like. To the extent that individual cooktop deployments may communicate through local or Internet-based network access, additional benefits arise around topics such as, planning for demand loading, and the like. An example may include generating and storing more hydrogen during the week when people tend to cook a home than on the weekend, or using shared information about recipes to facilitate bulk delivery of fresh items to an apartment building, multiple proximal restaurants, and the like. In embodiments, the cooking system may enable and benefit from analytics, such as for profiling, recording or analyzing users, usage of the device, maintenance and repair histories, patterns relating to problems or faults, energy usage patterns, cooking patterns, and the like.

**[2056]** These methods and systems may further perform profiling, analytics, and intelligence related to deployment, use and service of solar-powered electrolyzers that generate hydrogen that is stored in a low-pressure hydrogen storage system.

**[2057]** Methods and systems related to extending the capabilities and access to content and/or VAS of a smart hydrogen-based cooking system through intelligent networking and development of transaction channels are described herein.

**[2058]** Methods and systems of an ecosystem based around the methods and systems of generating hydrogen via solar-powered electrolyzers, storing the generated hydrogen in low pressure storage systems, distribution and use of the stored hydrogen by one or more individuals, and the like, are described herein. In embodiments, the cooking system, or a collection of cooking systems, may provide information to a broader business ecosystem, such as informing suppliers of foods or other materials or components of aggregate information about usage, informing advertisers, managers and manufacturers about consumption patterns, and the like. Accordingly, the cooking system may comprise a component of a business ecosystem that includes various parties that provide various commodities, information, and devices.

**[2059]** Another embodiment of smart cooking technology described herein may include an intelligent, computerized knob or dial suitable for direct use with any of the cooking systems, probes, single burner and other heating elements, and the like described herein. Such a smart knob or dial may include all electronics and power necessary for independent operation and control of the smart systems described herein.

**[2060]** In embodiments, the cooking system is an industrial cooking system used to provide heat in a manufacturing process. In embodiments, the industrial cooking system is used in at least one of a semi-conductor manufacturing process, a coating process, a molding process, a tooling process, an extrusion process, a pharmaceutical manufacturing process and an industrial food manufacturing process.

**[2061]** In embodiments, a smart knob is adapted to store instructions for a plurality of different cooking systems. In embodiments, a smart knob is configured to initiate a handshake with a cooking system based on which the knob automatically determines which instructions should be used to control the cooking system. In embodiments, a smart knob is configured with a machine learning facility that is configured to improve the control of the cooking system by the smart knob over a period of use based on feedback from at least one user of the cooking system.

**[2062]** In embodiments, a smart knob is configured to initiate a handshake with a cooking system to access at least one value-added service based on a profile of a user.

## DETAILED DESCRIPTION

**[2063]** Referring to FIG. **226**, an integrated cooktop embodiment **11** of the intelligent cooking system methods and systems **21** described herein is depicted. The cooktop embodiment **11** of FIG. **226**, may include one or more burners **31** that may burn one or more types of fuel, such as Liquid Propane Gas (LPG), hydrogen, a combination thereof, and the like. Gas burners may, for example, be rated to provide variable heat, including up to a maximum heat, thereby consuming a corresponding amount of fuel. One or more of the burners **31** may operate with an LPG source **51** and a source of hydrogen gas **61** such that the hydrogen source **61** may be utilized based on a demand for fuel indicated by the burner **31**, a measure of available LPG fuel, an amount of LPG fuel used over time, and any combination of use, demand, historical usage, anticipated usage, availability of supply, weather conditions, calendar date/time (e.g., time of day, week, month, year, and the like), proximity to an event (e.g., an intense cooking time, such as just before a holiday), and the like. The hydrogen source **61** may be utilized so that the amount of other fuel used, such as LPG, is kept below a usage threshold. Such a usage threshold may be based on costs of LPG gas, uses of LPG gas by other burners **31** in the cooking system **21**, other cooking systems **21** in the vicinity (e.g., other cooking systems **21** in a restaurant, other cooking systems **21** in nearby residences), and the like. Each cooking system **21** and/or burner **31** within the cooking system **21** may therefore provide on-demand fuel sourcing dynamically without need for user input or monitoring of the cooking system **21**. By automating fuel sourcing, the burner may extend the life of available LPG by automatically introducing the hydrogen fuel, such as by switching from one source to the other or by reducing one source (e.g., LPG) while increasing the other (e.g., hydrogen). The degree to which each fuel source is utilized may be based on a set of operational rules that target efficiency, LPG fuel consumption, availability of hydrogen, and the like. Rating of the one or more burners **31** may be under the control of a processor, including to provide different levels of rating for different fuel sources, such as LPG alone, hydrogen alone, or a mixture of LPG and hydrogen with a given ratio of constituent parts.

**[2064]** Each of the burners **31**, cooking systems **21**, or collection of cooking systems **21** may be configured with fuel controls, such as fuel mixing devices (e.g., valves, shunts, mixing chambers, pressure compensation baffles, check valves, and the like) that may be controlled automatically based, at least in part on some measure of historical, current, planned, and/or anticipated consumption, availability, and the like. In an example, one or more burners **31** may be set to produce 1000 W of heat and a burner gas source control facility may activate one or more gas mixing devices while monitoring burner output to ensure that the burner output does not deviate from the output setting by more than a predefined tolerance, such as 100 W or ten percent (10%). Alternatively, a model of gas consumption and burner output, embodied in a software module that may have access to data sources regarding types of gas, burning characteristics, types of burners, rating characteristics, and the like, may be used by the control facility to regulate the flow of one or

more of gasses being mixed to deliver a consistent burner heat output. Any combination of burner output sensing, modeling, and preset mixing control may be used by the control facility when operating fuel sourcing and/or mixing devices.

**[2065]** The one or more burners **31** may include intelligence for enhancing operation, efficiency, fuel conservation, and the like. Each of the burners **31** may have its own control facility **101**. A centralized cooking system control facility may be configured to manage operation of the burners **31** of the cooking system **21** or other heating elements noted throughout this disclosure. Alternatively, the individual burner control facilities **101** may communicate over a wired and/or wireless interface to facilitate combined cooking system burner control. One or more sensors to detect presence of an object in the targeted heating zone (e.g., disposed on the burner grate) may provide feedback to the control facility. Object presence sensors may also provide an indication of the type, size, density, material, and other aspect of the detected object in the targeted heating zone. Detection of a material such as metal, versus cloth (e.g., a person's sleeve), versus human flesh may facilitate efficiency and safety. When cloth or human flesh is detected, the control facility may inhibit heat production so as to avoid burning the person's skin or causing their clothing to catch fire. Such a control facility safety feature may be over ridden through user input to the control facility to give the user an opportunity to determine if the inhibited operation is proper. Other detectors, such as spill over (e.g., moisture) detectors in proximity to the burner may help in managing safety and operation. A large amount of spillage from a pot may cause the flame being produced by the burner to be extinguished. Based on operational rules, the source of gas may be disabled and/or an igniter may be activated to resume proper operation of the burner. Other actions may also be configured into the control facility, such as signaling the condition to a user (e.g., through an indicator on the cooking system **21**, via connection to a personal mobile device, to a central fire control facility, and the like).

**[2066]** Burner control facilities **101** may control burner heat output (and thereby control fuel consumption) based on one or more models of operation, such as to heat a pan, pot, component, material, or other item placed in proximity to the burner **21** or other heating element. As an example, if a user wants to boil water in a heavy metal pot quickly, a control facility may cause a burner to produce maximum heat. Based on user preferences and/or other factors as noted above related to demand, supply, and the like, the control facility may adjust the burner output while notifying the user of a target time for completion of a heating activity (e.g., time until the water in the pot boils). In this way an intelligent burner **21** (e.g., on with a burner control facility) may achieve some user preferences (e.g., heating temperature) while compromising on others (e.g., amount of time to boiling, and the like). The parameters (e.g., operational rules) for such tradeoff may be configured into the cooking system **21**/burner **31** during production, may be adjustable by the user directly or remotely, may be responsive to changing conditions, and the like. In embodiments, machine learning, either embodied at the cooking system **21**, in the cloud, or in a combination, may be used to optimize the parameters for given objectives sought by users, such as cooking time, quality of the result (e.g., based on feedback measures about the output product, such as taste in the case of foods or other quality metrics in the case of other products of materials). For example, the cooking system **21** may be configured under control of machine learning to try different heating patterns for a food and to solicit user input as to the quality of the resulting item, so that over time an optimal heating pattern is developed.

**[2067]** The intelligent cooking system **21** as described herein and depicted in FIG. **226** may include an interface port **127** with supporting structural elements to securely hold a personal mobile device **150** (e.g., a mobile phone) in a safe and readily viewable position so that the user may have both visual and at least auditory access to the device. The cooking system **21** may include features that further ensure that the mounted mobile device **150** is not subject to excessive heat, such as heat shields, deflectors, air flow baffles, heat sinks, and the like. A source of airflow may be incorporated to facilitate moving at least a portion of heated air from one or more of the burners **31** away from a mounted personal mobile device **150**.

**[2068]** The intelligent burner embodiment **280** depicted in FIG. **227** represents a single burner embodiment **210** of the intelligent cooking system **21** described herein. Any, none, or all features of a multi-burner intelligent cooking system **21** may be configured with the single burner version depicted in FIG. **227**. Further depicted in FIG. **227** is a version of the intelligent burner **280** that may have an enclosed burner chamber **220** that provides heat in a target heat-zone as a plane of heat rather than as a volume of heat. This may be generated by induction, electricity, or the like that may be produced by converting a source of fuel, such as LPG and/or hydrogen with a device that may produce electricity from a combustible gas.

**[2069]** The intelligent cooking system **21** may be combined with a hydrogen generator **300** to provide a source of hydrogen for use with the burners **31** as described herein. FIG. **228** depicts a solar-powered hydrogen production and storage station **320**. The hydrogen production station **320** may be configured with one or more solar collectors **330**, such as sunlight-to-electricity conversion panels **340** that may produce energy for operating an electrolyzer **350** that converts a hydrogen source, such as water vapor, to at least hydrogen and oxygen for storage. Energy from the solar collectors **330** may power one or more electrolyzers **350**, such as one depicted in the embodiment **700** of FIG. **232**. The one or more electrolyzers **350** may process water vapor, such as may be available in ambient air, for storage in a storage system **360**, such as a low-pressure storage system **370** depicted in FIG. **228**. Alternatively, and/or in addition to processing air-born water vapor, a source of water, such as collected rainfall, public water supply, or other source may be processed by the electrolyzer **350** to produce hydrogen fuel.

**[2070]** As hydrogen fuel is produced, it may be stored in a suitable storage container, such as the low-pressure storage system **370** that may be configured with the solar-powered electrolyzer system **350**. The hydrogen produced by the solar-powered electrolyzer **350** may be routed to one or more intelligent cooking systems **21** in addition to or in place of being routed to a storage system **360**. A hydrogen production and storage system **320** may produce hydrogen based on a variety of conditions including, without limitation, availability of a source of water vapor, availability of power to the electrolyzer, an amount of sunlight being collected, a forecast of sunlight, a demand for hydrogen

energy, a prediction of demand, based on availability of LPG, usage of LPG, and the like.

**[2071]** The low-pressure gas storage system **370** may store the hydrogen and oxygen in ultraviolet ("UV") coated plastic bags or through water immersion technology (e.g., biogas). The maximum pressure inside the system may be less than 1.1 bar, which promotes safety, as the pressure is very low. Also, as no compressors are used, the cost for storage is much lower than for active storage systems that store compressed gas. FIG. **229**, FIG. **230**, and FIG. **231** depict an embodiment **400** of such a low-pressure storage system **370**, with an inlet valve **411** and outlet valve **413** providing ports into an interior storage area **415** with the internal volume separated into two parts.

**[2072]** The low pressure set up may directly work from renewable energy, such as solar energy collected by solar cells, wind energy, hydro-power, or the like, improving the efficiency. The selected source of renewable energy may be based on characteristics of the environment; for example, marine industrial environments may have available wind and hydro-power, agricultural environments may have solar power, etc. Also if the renewable energy (e.g. solar energy) collection facility is connected to a power grid, the electricity generated and the energy stored may be provided to the grid, e.g., during high cost periods. Likewise, the grid may be used to restore any used energy during off peak hours at reduced costs.

**[2073]** The designed low-pressure storage may be used to store hydrogen, as a source of energy, that may be converted into electricity. The designed system may store energy at very low cost and may have a lifetime of years, e.g., more than 15 years, which modern batteries don't have. Amounts of storage may be configured to satisfy safety requirements, such as storing little enough to cause a minimal fire hazard as compared to storing larger amounts of other fuels.

**[2074]** In an embodiment, the intelligent cooking system **21** may signal to the electrolyzer system **350** a demand for hydrogen fuel. In response, the electrolyzer system **350** may direct stored hydrogen to the cooking system **21**, begin to produce hydrogen, or indicate that hydrogen is not currently available. This response may be based, at least in part on conditions for producing hydrogen. If conditions for producing hydrogen are good, the electrolyzer system may begin to produce hydrogen fuel rather than merely sourcing it from storage. In this way, the contemporaneous demand for hydrogen fuel and an ability to produce it may be combined to determine the operation of the energy production and consumption systems.

**[2075]** The intelligent cooking system **21** and/or hydrogen production and storage systems described herein may be combined with a platform that interacts with electronic devices and participants in a related ecosystem of suppliers, content providers, service providers, regulators, and the like to deliver VAS to users of the intelligent cooking system **21**, users of the hydrogen production system, and other participants in the ecosystem. Certain features of such a platform **800** may be depicted in FIG. **233**. The platform **800**, which may be a cloud-based platform, may handle cooking system utilities, such as leakage sensing, fuel sourcing, usage assistance, remote control, and the like. In an example, a user who is located remotely from the intelligent cooking system **21** may configure the cooking system **21** to operate at a preset time, or based on a preset condition from his/her computing device (e.g., a personal mobile phone, desktop computer, laptop, tablet, and the like). The user may further be notified when the cooking system **21** begins to operate, thereby ensuring the user that the cooking system **21** is operating as expected. A user or third party (e.g., a regulatory agency, landlord, and the like) may configure one or more present conditions. Such conditions may include a variety of triggers including time, location of a user or third party, and the like. In an example, a parent may want to have a cooking system operate to warm up ingredients based on an anticipated arrival of someone to the home. This anticipation may be based on a detected location of a mobile device being carried by a person whose arrival is being anticipated.

**[2076]** The platform **800** may further connect cooking system users with participants in the ecosystem (e.g., vendors and/or service providers) synergistically so that both the user and the participants may benefit from the platform **800**. In an example, a user may plan to prepare a meal for an upcoming dinner. The user may provide the meal plan to the platform **800** (e.g., directly through the user's mobile phone, via the user's intelligent cooking system **21**, and the like). The platform **800** may determine that fresh produce for the meal is preferred by the user and may signal to retailers and/or wholesalers to have the produce available for the user to pick up on his/her return to the home to prepare the meal. In this way, vendors and service providers who participate in the ecosystem may gain insight into their customer's needs. Likewise, users may indicate a preference for a type of meal that may be prepared with a variety of proteins. Participants in the ecosystem may make offers to the user to have one or more of the types of protein available for the user on the day and at the time preferred by the user. A butcher that is located in proximity to the user's return path may offer conveniences, such as preparation of cuts of meat for the user. Butchers who may not be conveniently located in proximity to the user's return path may offer delivery services on a day and time that best complies with the user's meal plans.

**[2077]** A user of such a platform-connected intelligent cooking system may leverage the platform **800** to gain both access to and analysis of information that is available across the Internet to address particular user interests, such as health, nutrition, and the like. As an example, a user may receive guidance from a health professional to reduce red meat intake and increase his seafood intake. The platform **800** may interact with the user, the cooking system, and ecosystem participants to facilitate preparing variations of a family's favorite meals with fish instead of red meat. Changes in spices, amounts, cooking times, recipes, and the like may be provided to the user and to the cooking system **21** through the platform **800** to make meal preparation more enjoyable. The platform **800** may help with nutritional assistance, such as by providing access to quality nutritional professionals who may work personally with a user in meal selection and preparation.

**[2078]** The platform **800** may also help a user of the platform **800**, even one who does not have access to the intelligent cooking system **21**, to benefit from the knowledge gathering and analysis possible from a platform **800** interconnected with a plurality of cooking systems, users, and ecosystem participants. In an example, the platform **800** may provide guidance to a user in the selection and purchase of an intelligent burner and/or integrated cooking system and related appliances (e.g., refrigeration), utensils, cookware, and the like.

**[2079]** The platform **800** may further facilitate integration with VAS, such as financial services (e.g., for financing infrastructure and operating costs), healthcare services (e.g., facilitating connecting healthcare providers with patients at home), smart home solutions (e.g., those described herein), rural solutions (e.g., access to products and services by users in rural jurisdictions), and the like. Information (e.g., profiles, analytics, and the like) gathered and/or generated by the platform **800** may be used for other business services either directly with or through other partners (e.g., credit rating agencies for developing markets).

**[2080]** The platform **800** may facilitate a range of user benefits, including shopping, infotainment, business development, and the like. In a business development example, a user may utilize her intelligent integrated cooking system **21** to produce her own cooking show by setting up her personal phone with camera on the cooking system **21** so that the user activity on the cooking system **21** may be captured and/or distributed to other users via the platform **800**. Further in the example, a user may schedule a cooking demonstration and may allow other users to cook along with him in an autonomous and/or interactive way. A user may opt into viewing and cooking along with the cooking show producer without directly interacting with the producer. Whereas, another user may configure his cooking system **21** with a personal mobile device and allow others to provide feedback based on the user's activities on the cooking system **21** via the camera and user interface of the mobile device.

**[2081]** The platform **800** may facilitate establishing an IoT ecosystem of smart home devices, such as, in embodiments, a smart kitchen that enables and empowers the homemaker. The smart kitchen may include a smart cooking system **21**, IoT middleware and a smart kitchen application. The smart cooking system **21** may provide a hardware layer of the platform **800** that may provide plug and play support for IoT devices, with each new device acting as a node providing more information, such as from additional sensors, to the entire system. IoT cloud support, which may be considered as a middleware layer of the platform **800**, may enable the communication (such as by streaming) and storage of data on the cloud, along with enabling optional remote management of various capabilities the platform **800**. A smart kitchen application may include a user interface layer that may provide a single point of access and control for the entire range of smart devices for the ease of the homemaker or other user. As an example of a smart kitchen enabled by the smart cooktop methods and systems described herein, an exhaust fan may be turned on as the water in a pot begins to boil, thereby directing the steam output of the pot away from the kitchen. This may be done through a combination of sensors (e.g., a humidity sensor), automated cooking system control that determines when the pot will begin to boil based on the weight of the pot on the burner, and the energy level of the burner, and the like Similar embodiments may be used in industrial environments, such as coordination with ventilation systems to maintain appropriate temperature, pressure, and humidity conditions by coordination of heating activities via the cooking system **21** and routing and circulation of air and other fluids by the ventilation system. The cooking system controller may, for example, communicate with an exhaust fan controller to turn on the fan based on these inputs and/or calculations; thereby improving the operation of the smart kitchen appliances while conserving energy through timely application of the exhaust fan. A flow chart representative of operational steps **5600** for this example is depicted in FIG. **281**.

**[2082]** The value created by such a platform **800** may be broadly classified into (i) VAS; (ii) profiling, learning and analytics; and (iii) a smart home solution or IoT solution for a commercial or industrial environment. The VAS of the system, may include without limitation: (a) personalized nutrition; (b) information and entertainment (also referred to as "infotainment"); (c) family health; (d) finance and commerce services (including online ordering and shopping); (e) hardware control services; and many other types of services.

**[2083]** Profiling, learning and analytics may provide a number of benefits to various entities. For example, a homemaker may get access to personalized nutrition and fitness recommendations to improve the health of the entire family, including healthy recipe and diet recommendations, nutritional supplement recommendations, workout and fitness recommendations, energy usage optimization advice for cooking and use of other home appliances, and the like. Device manufacturers and other enterprises may also benefit, as the platform **800** may solve the problems faced by home appliance device manufacturers in integrating their devices to the cloud and leveraging the conveniences provided by the same. Device manufacturers and other enterprises may be provided with an interface to the platform **800** (such as by one or more application programming interfaces, graphical user interfaces, or other interfaces) that may enable them to leverage capabilities of the platform **800**, including, one or more machine learning algorithms or other analytic capabilities that may learn and develop insights from data generated by the device. These capabilities may include an analytics dashboard for devices; a machine learning plug and play interface for developing data insights; a health status check for connected appliances (e.g., to know when a device turns faulty, such as to facilitate quick and easy replacement/servicing); and user profiling capabilities, such as to facilitate providing recommendations to users, such as based on collaborative filtering to group users with other similar users in order to provide targeted advice, offers, advertisements, and the like.

**[2084]** A smart home solution or IoT solution for a commercial or industrial environment may provide benefits to device manufacturers who find it difficult to embed complex electronics in their devices to make them intelligent due to development and cost constraints. The platform **800** simplifies this by providing a communication layer that may be used by partners to send their device data, after which the platform **800** may take over and provide meaningful data and insights by analyzing the data and performs specific actions on behalf of an integrated smart home for the user. Additional value of each partner interacting through the platform **800** is the access to various sensory data built into the system for effectively making any connected device more intelligent. For example, among many possibilities, the ambient temperature sensor inside the smart cooking system **21** may be leveraged by a controllable exhaust facility to accordingly increase the airflow for the comfort of the homemaker.

**[2085]** Referring to the smart home embodiment of FIG. **234**, an intelligent cooking system **900** may be a participant in or may be a gateway to a home appliance network that may include other kitchen appliances, sensors, monitors, user interface devices, processing devices, and the like. The home appliance network, and/or the devices configured in

the home network, may be connected to each other and to other participants of the ecosystem through the platform **800** (FIG. **233**). Data collected from these appliances, participants in the ecosystem, users of the platform, third parties, and the like may provide an interactive environment to explore, visualize, and study patterns, such as fuel usage patterns. Data collected may further be synthesized through deep machine learning, pattern recognition, modeling, and prediction analysis to provide valuable insights related to all aspects of the platform participants, devices, suppliers, and the larger ecosystem.

**[2086]** Further embodiments of the hydrogen generation and consumption capabilities are now described.

**[2087]** The system may use water and electricity as fuel to generate the gas-on-demand that may be used, for example, for cooking. The hydrogen and oxygen generated in the cell may be separated out within the cell and kept separate until reaching the combustion port in a burner. A specially designed burner module may comprise different chambers to allow passage of hydrogen, oxygen, and cooking gas. The ports for hydrogen and cooking gas may be designed in such a way as to avoid flame flashbacks and flame lift-offs, and the like. The oxygen ports may be designed to ensure optimum supply of oxygen with respect to the hydrogen supply. The hydrogen and oxygen ports may be on mutually perpendicular planes ensuring proper intermixing of the burning mixture. The hydrogen and cooking gas connections may be mutually independent and may be operated separately or together to generate a mixed flame.

**[2088]** A hydrogen production and use system **1000** as disclosed herein may comprise one or more of the following elements as depicted in FIGS. **235** and **236**. An electrolytic cell **1101** is detailed in FIG. **236**, which shows an exploded view of the cell consisting of steel electrodes separated by nylon membranes inside polyvinyl chloride ("PVC") gaskets sandwiched by acrylic sheets. The cell may comprise an alkaline electrolytic cell that separates water into its constituent components of hydrogen and oxygen. A mixture tank, such as a concentrated alkaline mixture tank may serve as the electrolyte source for the electrolytic cell. The alkali mixture may be prepared by mixing a base like potassium hydroxide ("KOH") or sodium hydroxide ("NaOH") with water. In case of KOH, in embodiments the concentration may be around 20%. The membrane for separation of gases within the cell may be made from a variety of materials. One such material is a nylon sheet with catalyst coating that has enough thread count to allow ion transfer and minimal gas transfer. The electrodes used may be, for example, stainless steel or nickel coated stainless steel. Also provided may be gas bubbling tanks. The hydrogen and oxygen generated from the electrolytic cells may be passed through gas bubbling tanks. The tanks may be made with recirculation or non-recirculation modes. In a non-recirculation mode, the gas is bubbled through water and any impurity in the gas gets purified in the process. In recirculation mode, the gas is bubbled through KOH solution, which may be identical in concentration to the alkaline mixture tank. In this methodology, any additional electrolyte that flows out with the gas gets re-circulated into the alkaline mixture tank. The two bubbling tanks may be connected together, such as at the bottom, to ensure pressure maintenance across them. Dehumidifiers may also be included. The gas passed through the bubblers may have excess moisture content that reduces the combustion efficiency. Hence, the gas may be passed through dehumidifiers, which may use a desicmayt, water-gas separator membranes, or other dehumidification technologies, or a combination thereof, to reduce the humidity content of the gas. A hydrogen burner arrangement is provided wherein a conventional hydrogen burner, as known in the art, may be connected to the dehumidifier, such as through a flashback arrestor. In embodiments, there are no ports for air intake, as combustion of the hydrogen-air mixture may result in an elevated concentration of mono-nitrogen oxides ("NOx"), which in turn may result in a potential for flame flashback. The burner ports may have a small diameter, such as lower than 0.5 mm, to reduce the chance of any flame flashback. The ports may be aligned in such a way as to cross-ignite, resulting in combustion of the complete gas supply with a single spark. The hydrogen concentration throughout the supply line may be above the maximum combustion limit, and hence there is little safety hazard. The oxygen supply may be through a channel that is completely separate from the hydrogen one. The oxygen ports may be located on a plane perpendicular to the hydrogen ports to ensure proper mixing of the combustion mixture. Above the burner, a catalyst may be placed so as to lower the temperature of combustion, reducing the concentration of NOx generated. An economically feasible high temperature catalyst mesh may be used to lower the temperatures of combustion.

**[2089]** The power supply may supply a desired voltage that may be optimized according to the conditions of the system, such as the water temperature, pressure, etc. The voltage per cell may vary, such as from 1.4 v to 2.3 v, and the current density may be as low as 44 $mA/cm^2$ for maximum efficiency. As the current density is low, the efficiency tends to be high.

**[2090]** An LPG/cooking gas burner arrangement may be provided. The LPG/cooking gas burner arrangement may be added to the hydrogen burner arrangement. In embodiments, the system may be similar to a closed top burner arrangement, where the burner ports are along the sides of the burner and the flame fueled by the LPG surrounds the hydrogen flame. In embodiments, the gas supply channel may be kept separate from the hydrogen supply channel and the oxygen supply channel and would hence pose no safety risk in that regard. In alternative embodiments, the fuels may be mixed, such as under control of a processor.

**[2091]** A renewable energy connection may be provided. In embodiments, the whole system, including the storage system, may be connected to renewable energy sources like solar power, wind power, water power, or the like. The hydrogen storage may act as storage for energy produced by such a renewable energy source.

**[2092]** In yet another embodiment of the system, the actuation of the combustion may be done using a sensor placed along the oxygen supply channel to detect the presence of a cooking utensil on the burner. The sensor may be shielded from the heat and made to work at an optimum temperature.

**[2093]** In yet another embodiment of the system, the hydrogen flame may be used to heat a coil that could hence radiate heat for more spread out cooking. The hydrogen supply to the radiator may be regulated by the temperature within the radiator.

**[2094]** In yet another embodiment of the system, the heat absorbed by the catalyst mesh may be used to generate electric power, increasing the net efficiency of the system.

**[2095]** The hydrogen production system may be integrated into a cooking system **1201** as depicted in FIG. **237**, which may include smart cooking system comprising a microcontroller with basic sensors, such as gyro, accelerometer, temperature and humidity. Other sensors like weight, additional temperature sensors, pressure sensors, and the like may be mounted on the cooking system and, based upon various inputs from the user and the system (including optional remote control), the actuators may control the cooking temperature, time and other cooking functions.

**[2096]** A speaker may sometimes be used to read out the output or simply play music.

**[2097]** The microcontroller may also be interfaced with a display and touch interface.

**[2098]** The microcontroller may be connected with the cloud, where information regarding recipes, weight and temperature, and the like may be stored and accessed by the controller. The microcontroller may also provide information on the user's cooking patterns.

**[2099]** In an embodiment, smart system configuration, control, and cooking algorithms may be executed by computers (e.g., in the cloud) to process all gathered and sensed information, optionally providing a recommendation related to the operation to the end user. The recommendation may include suggesting suitable recipes, auto turning of the heat in the burner, and the like. The microcontroller may communicate via Bluetooth low energy ("BLE"), Wi-Fi and/or lowaran, or the like, such as to ensure connectivity to the cloud. Lowaran is a wireless network that leverages long-range radio signals for communicating between IoT devices and cloud devices via a central server. The microcontroller may be designed in such a way that it has enough processing power to connect to other IoT devices that may have little or no processing power and also do processing for these IoT devices to give the end user a smart and intelligent, all in one, smart home solution.

**[2100]** FIG. **238** and FIG. **239** depict auto-switching connectivity **1301** in the form of ad hoc Wi-Fi from a cooktop **1310** through nearby mobile devices **1371** may be performed in the event of non-availability of a common home Wi-Fi router **1340** to ensure cloud connectivity **1360** whenever possible. FIG. **238** depicts a normal connectivity mode when Wi-Fi **1340** is available. FIG. **239** depicts ad hoc use of local mobile devices **1400** for connectivity to the cloud **1360**.

**[2101]** Additional smart cooking system features and capabilities may include weight sensors for each heating element that, when combined with cooking learning algorithms, may control fuel consumption to minimize overcooking and waste of fuel. This may also benefit configurations that employ multiple heating elements, so that unused heating elements do not continue to operate and waste fuel. FIG. **240** depicts a three-element induction smart cooking system **1500**. Heating elements may be gas-based or may alternatively include heating with induction, electric hot plate, electric coil, halogen lamp, and the like. FIG. **241** depicts a single burner gas smart cooking system **1600**. FIG. **242** depicts an electric hot plate (coil) smart cooking system **1700**. FIG. **243** depicts a single induction heating element smart cooking system **1800**.

**[2102]** Another embodiment of smart cooking technology described herein may be an intelligent, computerized knob, dial, slider, or the like suitable for direct use with any of the cooktops, probes, single burner elements, and the like described herein. Such a smart knob **2000** may include all electronics and power necessary for independent operation and control of the smart systems described herein. References to a smart knob **2000** should be understood to encompass knobs, dials, sliders, toggles and other physical user interface form factors that are conventionally used to control temperature, timing and other factors involved in heating, cooking, and the like, where any of the foregoing are embodied with a processor and one or more other intelligent features.

**[2103]** The smart knob **2000** may include an embodiment with a digital actuator, such as for electric-based cooking systems and another embodiment with a mechanical actuator, such as for gas models. The smart knob **2000** may be designed with portability and functionality in mind. The knob may include a user interface (e.g., display, audio output, and the like) through which it may provide users step-by-step recipes, and the like. The smart knob **2000** may operate wirelessly, so that it may set alarms and also monitor the operation of a plurality of smart cooking systems **21** even if it is removed from the cooking system actuator. The smart knob **2000** may, in embodiments, store information that allows it to interface with different kinds of cooking systems, such as by including programs and instructions for forming a handshake (e.g., by Bluetooth™ or the like) with a cooking system to determine what control protocol should be used for the cooking system, such as one that may be managed remotely, such as in a cloud or other distributed computing platform. In embodiments, a user may bring the smart knob **2000** in proximity to the cooking system **21**, in which case a handshake may be initiated (either under user control or automatically), such that the smart knob **2000** may recognize the cooking system **21** and either initiate control based on stored instructions on the knob **2000** or initiate a download of appropriate programming and control instructions for the cooking system **21** from a remote source, such as a cloud or other distributed computing platform to which the knob **2000** is connected. Thus, the knob **2000** serves as a universal remote controller for a variety of cooking systems, where a user may initiate control using familiar motions, such as turning a dial to set a timer or temperature setting, moving a toggle or slider up or down, setting a timer, or the like. In embodiments, a plurality of knobs **2000** may be provided that coordinate with each other to control a single burner or heating element or a collection of burners or heating elements. For example, one of the knobs **2000** in a pair of knobs might control temperature of a burner or heating element, while a second knob in the pair might control timing for the heating.

**[2104]** In embodiments, the smart knob **2000** may be used to embody complex protocols, such as patterns of temperatures over time, such as suitable for heating an item to different temperatures over time. These may be stored as recipes, or the like, so that a user may simply indicate, via the knob **2000**, the desired recipe, and the knob **2000** will automatically initiate control of a burner or heating element to follow the recipe.

**[2105]** A user may use the smart knob **2000** with an induction cooking system for controlling the temperature of a cooking system, such as an induction stove, providing step-by-step instructions, and the like. The user may, for example, switch to cooking with a gas burner-based smart cooking system by simply taking the smart knob **2000** off of the induction cooking system, configuring it to operate the

gas burner cooking system (such as by initiating an automated handshake), and mounting the knob **2000** in a convenient place, such as countertop, wall, refrigerator door, and the like. It should be noted that while the knob **2000** may be placed on the cooking system, once a connection has been established, such as by Bluetooth™, near-field communication ("NFC"), Wi-Fi, or by programming, the knob **2000** may be placed at any convenient location, such as on the person of a user (such as where a user is moving from place to place in an industrial environment), on a dashboard or other control system that controls multiple devices, or on another object. The knob **2000** may be provided with alternative interfaces for being disposed, such as clips for attachment to objects, hook-and-loop fasteners, magnetic fasteners, and physical connectors.

**[2106]** The smart knob **2000** may use, include or control the various features of the smart cooking systems **21** described throughout this disclosure. Additionally, the smart knob **2000** may be connected to other IoT devices, such as smart doorbell, remote temperature probe (e.g., in a refrigerator or freezer), and the like. The smart knob **2000** may be used for kitchen tasks other than cooking. By connecting with a temperature probe, the smart knob **2000** may be used to inform a user of the progress of an item placed in the refrigerator or freezer to cool down.

**[2107]** As it requires only very little power and as it is mountable on the smart cooking system **21**, the smart knob **2000** may, in embodiments, be recharged through thermoelectric conversion of the heat from a burner on the cooking system **21**, so that the use of external power supply is not required.

**[2108]** FIGS. **244-251** depict a variety of user interface features **2010**, **2020**, **2101**, **2201**, **2300**, **2400**, **2500**, **2600** of the smart knob **2000**.

**[2109]** FIG. **252** depicts a smart knob **2700** deployed on a single heating element cooking system **2710**, while FIG. **253** depicts a smart knob **2800** placed on a side of a kitchen appliance **2810**.

**[2110]** Other features of a smart cooking system **21** may include examples of smart temperature probes **3101** depicted in FIGS. **254-257**. The temperature probe **3101** may consist of a wired or wireless temperature sensor that may be interfaced with a smart cooking system **21**, smart knob **2000**, and/or a mobile phone **150** for cooking. The temperature probe **3101** may, in embodiments, be dipped into a liquid (such as a soup, etc.) or inserted interior of a solid (such as a piece of meat or a cooking baked good), to cook very precisely based on the measured interior temperature of the liquid or solid. Also the smart temperature probe **3101** may facilitate use of an induction base to control the temperature of the base for heating water to a precise temperature (e.g., for tea) with any type of non-magnetic cooking vessel.

**[2111]** The smart cooking system **21** may include a smart phone docking station **3301** that may be configured to prevent cooking heat from directly impacting a device in the station while facilitating easy access to the phone for docking, undocking and viewing. A variety of different docks **3310**, **3401**, **3501**, **3601**, **3701**, **3801** for compatibility with a range of smart phone and tablet devices are depicted in FIGS. **258-263**.

**[2112]** Various burner designs are contemplated for use with a smart cooking system as described herein. FIGS. **264-280** depict exemplary burners **3900**, **4200**, **4701**, **5000**, **5300**.

**[2113]** The Internet-connected smart cooking system **21** described herein may include tools and features that may help a user, such as a homemaker, a commercial chef, or cook in an industrial environment to prepare healthier meals, learn about food choices of other users, facilitate reduced meal preparation time, and repeatable cooking for improved quality and value. A few applications that may leverage the capabilities of the present Internet-connected smart cooktop may include a fitness application that helps one estimate daily calorie consumption requirements for each member of a user's family or other person for whom the user may prepare meals. This may help a user to control and track the user's family fitness over time. Using data from recipes and weight sensors for pots/pans used to cook the food for the recipes, a fitness application may generate a calorie consumption estimate and suggest one or more healthy alternative recipes. Through combining sensing and control of the cooktop functionality (e.g., burners) with Internet access to food nutrition and weight values for recipe ingredients being cooked, the calorie count of a content of a pan placed on a smart cooktop burner may be estimated. As an example, if a recipe calls for ¼ cup of lentils per serving combined with a serving-unit of water, a total weight of a pan being used to prepare the lentils may be sensed. By knowing the weight of the pan, a net weight of the ingredients in the pan may be calculated so that a number of servings in the pan may be determined by calculating the total weight and dividing it by a weight per serving. By accessing recipe comparison tools (e.g., as may be available via resources on the Internet) that may include lists of corresponding meals that have lower fat, higher nutritional ingredients, alternate recipes could be suggested to the user that would provide comparable nutrition with lower calories or fat, for example.

**[2114]** A food investigation application may gather information from the smart cooktops and user activity about recipes being used by users of the smart cooktop systems throughout a region (e.g., a country such as India) to calculate various metrics, such as most often cooked recipe, preferred breakfast meal, popular holiday recipes, and the like. This information may be useful in planning purposes by food suppliers, farmers, homeowners, and the like. As an example, on any given day, information about the recipes that people in your region are preparing might be useful in determining which dishes are trending. An Internet-based server that receives recipe and corresponding limited demographic information over time may determine which meals are trending. A count of all uses of all recipes (or comparable recipes) during a period of time (e.g., during evening meal preparation time) may be calculated and the recipes with the greatest use counts could be identified as most popular, currently trending, and the like.

**[2115]** Cooking becomes more repeatable so a cook (e.g., a less experienced cook) may rely on the automation capabilities of an Internet-connected smart cooktop system to avoid mistakes, like overcooking, burning due to excessive heat, and the like. This may be possible due to use of information about the items being cooked and the cooking environment, such as the caloric output value of each burner in any heat output setting, the weight of the food being cooked, target temperature and cooking time (e.g., from a recipe), a selected doneness of the food, and the like. By combining this information with modeled and/or sensed burner operation (e.g., temperature probes may be used to detect the temperature of the food being cooked, the tem-

perature of the cooking environment, and the like) to facilitate automated control of heat, temperature, and cooking time thereby making meal cooking repeatable and predictable. Each type of burner (e.g., induction, electric, LP gas, hydrogen gas, and the like) may each be fully modeled for operational factors so that cooking a recipe with induction heating today and with hydrogen gas heat tomorrow will produce repeatable results Similar capabilities to combine information from the cooking system and information from sensors or other systems may be used to improve repeatability and improvement of industrial processes, such as manufacturing processes that produce materials and components through heating, drying, curing, and the like.

**[2116]** In embodiments, the methods and systems disclosed herein may include, connect with or be integrated with hydrogen production, storage, and use systems. In embodiments, the hydrogen production, storage, and use systems may use renewable energy as a source of energy for various operations including hydrogen production, hydrogen storage, distribution, monitoring, consumption and the like. In embodiments, hydrogen production, such as with a hydrolyzer system, may be powered by renewable energy such as solar power (including systems using direct solar power and photovoltaic systems (including ones using semiconductors, polymers, and other forms of photovoltaic), hydro power (including wave motion, running water, or stored potential energy), gravity (such as involving stored potential energy), geothermal energy, energy derived from a thermal gradient (such as a temperature gradient in a body of water, such as ocean water, or a temperature gradient between a level of the earth, such as the surface, and another level, such as a subterranean area), wind power and the like and where applicable. References to renewable energy throughout this disclosure should be understood to encompass any of the above except where the context indicates otherwise.

**[2117]** In embodiments, solar collector panels or the like may be configured with a hydrogen production system, such as a system described herein, to provide electricity for powering the production of hydrogen, including from water. A hydrogen production system may be built with integrated solar collector panels and the ability to connect to further solar systems, so that placement of the hydrogen production system in an ambient environment that is exposed to sunlight may facilitate its self-powered operation or partially-self-powered operation via solar power.

**[2118]** In embodiments, solar power harvesting subsystems, such as a single panel or an array of solar panels, may be configured to be deployed separately, and optionally remotely, from the hydrogen production system. Solar power harvesting subsystems may be connected to one or more hydrogen production systems to facilitate deployment in environments with localized limited access to sunlight, such as in a multi-unit dwelling, a building with few windows, a building with interior areas that do not receive direct or sufficient sunlight (such as a warehouse, manufacturing facility, storage facility, laboratory, or the like) and the like. Other operational processes of a system for hydrogen production, storage, and use may be powered via solar power.

**[2119]** Solar energy harvested for the production of hydrogen may be shared and/or diverted to these other operations or sold back into the local grid as needed. Solar energy harvesting may also be used to charge a battery, charge various thermal systems, or other electrical energy storage facility that may directly provide the energy needed for hydrogen production immediately or with a time-shift and on-demand functions and other operational elements as described herein. In this way, while solar power provides a renewable source of energy, the impact of an absence of sunlight and therefore diminished solar power production may be mitigated through the use of an intermediate battery or the like.

**[2120]** In embodiments, a data collection system, involving one or more sensors and instruments, may be used to monitor the solar power system or components thereof, including to enable predictive maintenance, to enable optimal operation (including based on current and anticipated state information), and the like. Monitoring, remote control, and autonomous control may be enabled using machine learning and artificial intelligence, optionally under human training or supervision, as with other embodiments described herein. These capabilities for data collection, monitoring, and control, including using machine learning, may be used in connection with the other renewable energy systems, and components thereof, described throughout this disclosure.

**[2121]** In embodiments, the methods and systems disclosed herein may include, connect with or be integrated with other sources of renewable energy including wind power. Wind power may be harvested through a windmill, turbine, roots-blade configuration, or similar wind power collection facility that may be configured with the hydrogen production, storage and use systems and components similar to a solar collection facility or other electric sources as described herein. In many examples, configuring a turbine or similar wind power collection and conversion device attached to a hydrogen production, storage, and use system may facilitate deployment in a variety of environments where sufficient moving gas (such as blowing wind, air flowing around a moving element (such as part of a vehicle), exhaust from an industrial machine or process, or the like) is available. These and other embodiments are intended to be encompassed by the term "air flow" in this disclosure except where the context indicates otherwise.

**[2122]** In embodiments, a variety of sources of air movement may be utilized as a source of power from the air flow. In various examples, heated air that may result from the use of the hydrogen, such as for cooking and the like, may pass through a wind harvesting facility, such as a turbine that may be disposed in the heated air flow path. In embodiments, other heat harvesting devices may be deployed such as positive displacement device or other heated mediums through which energy may be absorbed and power a suitable heat engine. In embodiments, disposing a turbine or other energy/heat harvesting devices directly above a stove, cooking system, or other heat generating use of the hydrogen produced may produce energy that may be used to power, directly or indirectly, partially or wholly, such as through recharging a battery, operational processes of a hydrogen production, storage and use system.

**[2123]** In yet another use of renewable energy for powering one or more operational processes of a hydrogen production, storage, and/or use system, such as may be described herein, hydropower may be a source of renewable energy. In embodiments, hydropower may be converted into a form that is usable to operate processes of a hydrogen production, storage and use system as described herein

including electrical production and possibly harvesting mechanical power. In these examples, electricity from hydropower may be utilized to operate a hydrolyzer to produce hydrogen from a hydrogen source, such as water or ambient air-based water vapor. In embodiments, configuring a hydrogen production, storage, and use system that may directly utilize hydro power may involve building an enclosure that keeps a source of hydropower, such as a moving body of water (e.g., a river, waterfall, water flowing through a dam, and the like) from interfering with the operational processes such as hydrogen production, storage, and use. In embodiments, such an enclosure may facilitate deployment of a hydropower-sourced system directly in a flow of water by making at least portions of such a system submersible. Hydrogen production and storage, for example, may benefit from such an enclosure. In particular, a submersible hydrogen production system may take advantage of the hydrodynamic water in which the system is submerged as a source of hydrogen, as a source of energy to produce the hydrogen, as a source to cool the process, or the like.

**[2124]** Referring to FIG. **282**, embodiments of the methods and systems related to renewable energy sources for hydrogen production, storage, distribution and use are depicted. A system the facilitates use of renewable energy as described herein may include a hydrogen production facility **5074** that may be coupled to a hydrogen storage facility **5703**. The hydrogen production facility **5705** and/or the hydrogen storage facility **5703** may be coupled to one or more hydrogen use facilities **5707**. One or more of the hydrogen use facilities **5707** may be coupled through a hydrogen distribution network (not shown).

**[2125]** Hydrogen production, storage, distribution, and use may be at least partially powered by one or more renewable energy sources, such as solar energy source **5709**, wind energy source **5711**, hydro energy source **5713**, geothermal energy source **5715**, and the like. A wind energy source **5711** may be natural air currents, motor driven air currents, air currents resulting from movement of a vehicle, or waste air flow sources **5719** (such as waste heat from heating operations, such as cooking and the like). Any of these renewable energy sources may be converted into a form of energy that is suitable for an intended use by the hydrogen production, storage, distribution, and use system. As an example, a solar energy source **5709** may be converted to electricity as described herein to provide electrical power to the hydrogen production facility **5705**, hydrogen storage facility **5703**, use facility **5707** and the like. It will be appreciated in light of the disclosure that the hydrogen storage facility **5703** need not be required to operate with the hydrogen production facility **5705** and the hydrogen use facility **5707** as the produced hydrogen may be consumed upon its production without a need for storage.

**[2126]** Another form of energy that may be sourced by the hydrogen production facility **5705** may include a sulfur dioxide source **5717**, such as fossil fuel combustion systems that produce waste sulfur dioxide. As described herein, a sulfur dioxide source **5717** may supply heat energy and raw material from which hydrogen gas may be produced by a hydrogen production facility **5705** adapted to use sulfur dioxide.

**[2127]** Yet another form of energy that may be sourced by the hydrogen production facility **5705** and/or storage facility **5703** may include heat recapture **5721** from one or more of the hydrogen use facilities **5705**. The recovered heat may be used directly, converted into another form, such as steam and/or electricity, or provided as input raw material from which hydrogen may be harvested.

**[2128]** Referring to FIG. **283**, an alternate embodiment of renewable energy use with at least one hydrogen production facility **5705**, at least one hydrogen storage facility **5703**. In the embodiment of FIG. **283**, hydrogen production, storage, distribution, and uses may be connected, but may not be integrated, such as into a standalone combined function system. In the embodiment of FIG. **283**, renewable energy sources as described for the embodiment of FIG. **282** may be used to provide energy for hydrogen production **5705** and storage **5703**. However, hydrogen use may be provided through a hydrogen distribution system **5823** that may be coupled to the hydrogen production facility **5705**, storage facility **5703** and to hydrogen use facilities **5707** that may be located at distinct physical locations, such as individual apartments in an apartment building, and the like.

**[2129]** Referring to FIG. **284**, the methods and systems described herein for hydrogen production, storage, distribution, use, and control may be coupled with predictive maintenance methods and systems to facilitate improvements in operation with less unplanned downtime and fewer component failures. In the embodiment of FIG. **284**, predictive maintenance facility **5903** may be configured to operate on a processor associated with or more particularly integrated with a hydrogen production, storage, and use facility. Alternatively, predictive maintenance facility may be configured to operate on a processor that is not integrated, such as a cloud computer, a stand alone computer, a networked server, and the like. Predictive maintenance facility **5903** may receive input from various system sensors **5905** along with information from various data sets, such as a use/maintenance model **5915**, warranty and standards rules **5919**, and an archive of sensor data and analytics derived there from **5917**, among other sources.

**[2130]** System sensors **5905** may include hydrogen system sensors, input energy sensors, process sensors (e.g., catalytic sensors and the like), output sensors, use sensors, and a range of other sensors as described herein. Each or any of these sensors may provide data directly or through an intermediate processor a data acquisition unit, a cross-linked data acquisition unit, and the like to the predictive maintenance facility **5903**. For a local/integrated predictive maintenance facility **5903**, sensor data may be provided through a range of inputs, including direct inputs and the like. For a remote/cloud preventive maintenance facility, sensor data may be provided through a networking interface, such as the Internet, an intranet, a wireless communication channel, and the like.

**[2131]** The predictive maintenance facility **5903** may further be coupled with a local or remote user interface for providing reports, facilitating control, interacting with the predictive maintenance facility **5903** to facilitate user participation in maintenance actions, planning, and analysis. The user interface facility **5909** may be integrated with the predictive maintenance facility **5903**, such as being an integrated component of a hydrogen production, storage, and use system. Alternatively, the user interface **5909** may be remotely accessible, such as through a network, a cloud network facility, and the like including without limitation the Internet and the like.

**[2132]** To facilitate at least semi-automated predictive maintenance, replacement parts, service, and the like may be

automatically ordered based on a result of the predictive maintenance facility **5903** indicating that some form of preventive activity is required. The automatic part/service ordering facility **5913** may be connected directly or indirectly to the user interface/control facility **5909** to enable users to approve or adjust an automated order.

**[2133]** The embodiments of FIG. **284** include at least two configurations; (i) an integrated hydrogen cooking/heating system with predictive maintenance **5911**, and (ii) modular system that may take advantage of shared resources such as cloud computing capabilities, cloud storage facilities and the like.

**[2134]** In embodiments, the methods and systems disclosed herein may include, connect with or be integrated with one or more computing device functions that interface with operational, monitoring, and other electronic aspects of a hydrogen production, storage and optional use system as described herein and that may be accessed through a variety of interfaces. Functions, several of which are described elsewhere herein, may include control and monitoring of hydrogen production, control, and monitoring of hydrogen storage including distribution and the like, control and monitoring of the use of generated and/or stored hydrogen. In embodiments, access to these functions, such as to provide control input and receive monitor output, may be done through an interface, such as an application programming interface (API) or an interface to one or more services, such as in a services oriented architecture, that may expose certain aspects of these functions, services, components, or the like, to facilitate access thereto. The terms "API" or "application programming interface" should be understood to encompass a variety of such interfaces to programs, services, components, computing elements, and the like except where the context indicates otherwise.

**[2135]** In embodiments, API type interfaces may include a library of features, such as algorithms, software routines, and the like through which the exposed aspects may be accessed. In embodiments, API type interfaces may facilitate access to a control function of a hydrogen production subsystem as described herein to enable third-party control and/or monitoring of the subsystem, to facilitate analytics with outside resources, to facilitate interconnection of multiple resources, coordination of fuel and renewables between multiple systems, and the like. In embodiments, a single hydrogen production subsystem may be utilized to provide hydrogen to a plurality of hydrogen storage systems. By way of these examples, one or more of the hydrogen storage systems may use the API or API-type interface to access a flow valve, fuel distribution architecture, or the like that may facilitate distribution of hydrogen produced by the storage systems so that storage systems that are at or near storage capacity may direct a control function of the flow valve to reduce or stop distribution of the hydrogen to the storage system. In embodiments, Application programming interfaces may be utilized across a range of control and monitoring functions, including providing access to hydrogen consumption monitoring elements, renewable energy utilization monitoring systems, hydrogen use systems, smart cooktop systems as described herein, and the like.

**[2136]** In addition to API type interfaces as described herein, a hydrogen production, storage, and use system may be accessed through one or more machine-to-machine interfaces. In embodiments, such interfaces may include directly wired interfaces, such as between a monitoring machine and a sensor disposed to sense the flow of water, the flow of energy used for hydrolysis, the flow of resulting hydrogen, or one or more levels, such as liquid levels, of any of the foregoing. In embodiments, machine-to-machine interfaces may be indirect, such as through a standard communication portal such as network, e.g., an intranet, an extranet, the Internet, and the like. In embodiments, communication protocols such as HTTP and the like may be utilized to exchange control, monitoring, and other information between some portion of the hydrogen production, storage, and use system and another machine. In embodiments, a machine-to-machine interface may facilitate third party control of hydrogen use. This may manifest itself in a variety of modes, examples of which may be a user remotely accessing a cooking function from his mobile device using the Internet as a machine-to-machine interface between the mobile device and the cooking function.

**[2137]** In embodiments, interfacing with a hydrogen production, storage and use system as described herein may also be accomplished through a graphical user interface (GUI). In the many examples, such an interface may facilitate human direct access to control, monitoring, and other features of the system. In embodiments, a GUI may include a variety of screens that may be logically related to facilitating user access to a range of features of the system within a single GUI. In the many examples, there may be a main system GUI screen that may include links to a main production GUI screen that may include, among other things, links to further production GUI screens, e.g., a main screen may link to an energy source control screen, a storage system control, system health, predictive information, and the like. In embodiments, a main GUI screen may also facilitate accessing one or more GUI screens for other aspects of the system, such as hydrogen storage monitoring and control, hydrogen distribution monitoring and control, hydrogen use, cooking functions of a smart cooktop, heating functions for a heater subsystem, and the like.

**[2138]** In embodiments, the methods and systems disclosed herein may include, connect with or be integrated with predictive maintenance functions that may facilitate smart replacement of components thereby avoiding failure and down time. In embodiments, predictive maintenance functions that are described herein may be further enhanced using one or more sensors that may facilitate monitoring and/or control of portions of the system that may require maintenance. In the examples, one or more sensors may be deployed that facilitate monitoring and/or control of an electrolyzer function. By way of the examples, the one or more sensors that may monitor the membrane portion of the electrolyzer may provide data that may be useful for detecting one or more conditions that requires attention immediately or may culminate with other factors and may later require attention, such as a condition that requires the membrane to be replaced. Such sensors may further be configured to generate one or more alerts, such as audio, visual, electronic, logical signals when sensing a condition that may indicate replacement of the membrane or other portion of the hydrolyzer is recommended. Such sensors may further be configured to generate one or more alerts that may trigger one or more recordings of data from the sensors for a long duration to capture signals that may capture events at various intervals, frequencies, and magnitudes that may be indicative of the need to replace the membrane or other portion of the hydrolyzer. Examples of the membrane and

the electrolyzer are disclosed in U.S. Pat. No. 8,057,646 to Hioatsu, et al, filed on 7 Dec. 2005, and U.S. Pat. No. 6,554,978 to Vandenborre, filed 1 Jun. 2001, each of which is hereby incorporated by reference as if fully set forth herein.

**[2139]** In embodiments, such alerts may be generated by the sensors and/or by one or more computing facilities that may interface with the sensors and may analyze data from the sensors. In embodiments, sensors, such as a membrane sensor, may be integrated into the system physically (to monitor a physical aspect of the system), and/or logically (such as an algorithm that processes data from one or more sensors). In embodiments, one or more membrane sensors, or the like, may detect one or more conditions that may be indicative that another action or precaution should be taken. In embodiments, one or more alerts from such sensors may indicate the type of condition sensed as well as a degree of the condition sensed. In embodiments, when sensor alert and/or sensor data is combined with other information known about the system, an alert may be generated that indicates one or more actions or precautions that should be taken to counteract the condition causing the alert. In one example, an alert (or set of alerts) may require an action to reduce an amount of hydrogen being produced, such as by turning off or cycling with a greater duty cycle the operation of the hydrolyzer.

**[2140]** In embodiments, the methods and systems disclosed herein may include, connect with or be integrated with sensors that may monitor interconnections for corrosion or other conditions, such as internal buildup that reduces the flow of hydrogen or the like through the interconnections that may be associated with the system. In embodiments, such sensors may provide data indicative of a degree of corrosion, conditions that might speed corrosion, and the like to a computing device that may detect a condition indicative of needing to take action immediately or at such time as the degree of corrosion would demand such as replace an affected portion of the interconnections. In an example, the one or more conditions may be determined by comparing data from the one or more sensors with data values that suggest an unacceptable degree of corrosion.

**[2141]** In embodiments, a monitoring subsystem with one or more sensors may collect, analyze, and/or report the real-time measurement of sensed data. Likewise, such a subsystem may collect, analyze, and/or report real-time failure data, such as to facilitate measuring and/or tracking material failure data, e.g., frequency, degree, time since deployment, and the like.

**[2142]** In embodiments, the methods and systems disclosed herein may include, connect with or be integrated with other sensing modalities to monitor catalytic activities to determine, for example, catalytic performance, efficiencies and the like. Based on these sensed activities, alerts that may indicate a need for catalyst replacement and/or other actions or precautions to be performed may be generated.

**[2143]** In embodiments, the methods and systems disclosed herein may include, connect with or be integrated with various methods and systems to monitor and determine input demand, output production, need for increases therein, and the like.

**[2144]** In embodiments, a facility with multiple hydrogen operations including production and/or storage may be shown to benefit from monitoring to balance storage and production rate capacity, such as for variable demand. In embodiments, monitoring input demand may provide insight into the amount of hydrogen being used, when it is used, with what other gases it is being used, which use subsystems are demanding input, quality of hydrogen produced, amount of energy required to produce the hydrogen, rate of hydrogen production and use over time and under a variety of conditions, and the like. In embodiments, sensors may be deployed and integrated with monitoring and control systems to monitor and coordinate efficient and safe storage or transfer of hydrogen.

**[2145]** In embodiments, the methods and systems disclosed herein may include, connect with or be integrated with one or more sensors to monitor and coordinate efficient and safe storage and/or transfer of hydrogen may be implemented in the Internet of things (IoT) applications. In examples when hydrogen is stored as part of a micro/smart grid solution, monitoring system functions, such as input demand, production, and storage may facilitate determining a need for increasing input/supply. Likewise, sources of energy for operating a hydrolyzer and the like as described herein, such as renewable energy from solar and wind may be managed so that available sunlight and/or the wind may be tied to hydrogen production demand predictions from users such as industrial and others. In embodiments, this may facilitate ensuring allocation of available hydrogen for grid stability and the like. In embodiments, sensors that measure integrated energy use may similarly provide information to further facilitate managing for grid stability, among other things. In examples, predicted demand may be used in determining when and how much hydrogen should be produced and whether it should be stored to facilitate grid stability. In embodiments, this information may be used when portions of a grid are predicted to have high demand, while other portions are predicted to have low demand. Supply, from the production of hydrogen and/or from stored hydrogen, may be directed where when it is predicted to be needed or it is predicted to be needed in possibly relatively fewer quantities but may be consumed more quickly.

**[2146]** In embodiments, another form of system sensing may involve fuel quality sensing. In embodiments, sensors that may accurately measure fuel and oxidant compositional characteristics may be used in a control system to direct hydrogen to different storage facilities based on the information. By way of these examples, uses of hydrogen that may tolerate higher oxidant composition may be sourced from storage facilities appropriately, perhaps at a lower cost than for hydrogen with a lower oxidant composition.

**[2147]** In embodiments, the methods and systems disclosed herein may include, connect with or be integrated with sufficiently reliable flame monitoring systems that may sense one or more of flame quality, flame stability, flame temperature, and the like. In embodiments, the methods and systems disclosed herein may include, connect with or be integrated with one or more sensors that may provide for continuous flue gas analysis that may be used to adjust the efficiency and magnitude the flame. In embodiments, further sensors and control systems related to flame or combustion products monitoring may be used including one or more continuous heat flux meters.

**[2148]** In embodiments, the methods and systems disclosed herein may include, connect with or be integrated with one or more particle sensors to determine how clean something is, e.g., exhaust and/or ambient release from a process or liquid including from hydrocarbon combustion.

In embodiments, one or more emission detection sensors may be used detect inefficient combustion and may also be used to detect leaks from the system. By way of these examples, the one or more sensors may be configured to measure partial pressure or particle count when sensing internal and/or external emission such as diatomic hydrogen, carbon dioxide, carbon monoxide, and other combustion byproducts. The one or more sensors may be configured to measure combustion wave front, cylinder head temperature, lubrication cleanliness and/or entrainment, various vibration signals that may be indicative improper operation.

**[2149]** In embodiments, methods and systems that may include, connect with, or be integrated with hydrogen production, storage, and use may be deployed in a variety of environments. Systems that may facilitate production of a consumable energy source, such as hydrogen gas may be utilized in environments such as cooking meals or food preparation heating and/or cooking processes, including without limitation industrial cooking.

**[2150]** Preparation of meals or of food items that may be stored long term, such as canned foods and the like may be performed with the methods and systems described herein. Preparation of meals or food items in environments in which direct access to a reliable source of energy, such as electricity, natural gas, or other household combustibles for cooking or otherwise is not readily available, such as in mobile, sea-borne, air-borne, and other environments that are often actively in travel may be shown to benefit from the methods and systems described herein for autonomous production of hydrogen gas for use as a cooking energy source. Use of a cooking system that is described herein may be beneficial for use in mobile environments by reducing a total amount of fuel to be stored for use while in motion. By producing a clean burning energy source, such as hydrogen from renewable energy sources and through harvesting hydrogen from an ambient environment, deploying such systems on long duration travel vehicles, such as cargo ships, military ships, submarines, and the like may reduce the payload required to be carried for purposes such as meal preparation, cooking and the like.

**[2151]** Renewable energy to power processes of hydrogen production, monitoring, storage, distribution, and use may be harvested through the methods and systems described herein including solar power harvesting, wind power harvesting, thermal (e.g., geothermal) when deployed in mobile environments. Solar energy harvesting systems or components thereof that may be included with, connected to, or integrated with the hydrogen production, storage and use systems described herein may be deployed on sun-exposed surfaces, such as a roof of a vehicle, aircraft, ship, and the like. Air movement around and/or through a moving vehicle, as a result of propulsion of the vehicle and the like may be harvested and converted into an energy source suitable for use with hydrogen production, storage, distribution and the like. Heat generated by mobile system propulsion systems may be converted into a form of energy suitable for use in production, storage, distribution, and use of hydrogen. This may be accomplished through the use of inline turbine systems, other heat and energy extraction machines, wind capture systems, exhaust heat recapture systems, and the like. By using these readily available sources of energy, many of which are not otherwise utilized, total external energy requirements that may only be met through onboard storage, may be significantly reduced.

**[2152]** Use of the methods and systems for hydrogen storage and use may include deployment in marine transportation, such as on a submarine where the generation of toxic waste gas is undesirable. Hydrogen gas may be produced from sea water, stored as needed onboard, and safely consumed for cooking and other heating uses in a submarine without risk or costs of dealing with waste gas cleansing or removal. The hydrogen gas may be produced from sea water but not stored any only generated and consumed as needed onboard, and safely consumed for cooking and other heating uses in a submarine.

**[2153]** Other environments of deployment of the hydrogen-based systems described herein may include use on aircraft, such as for preparation of meals to be consumed on the flight. Other aircraft-based uses may include industrial cooking while in-flight to, for example, produce cooked goods for use, storage or distribution after the aircraft returns to earth. Inflight-based cooking with the methods and systems for autonomous hydrogen cooking systems and the like described herein may facilitate cooking food and the like for extended duration flights, such as aircraft that remains aloft rather than just being operated from one location to another. Meals, foods, and other goods could be cooked while in-flight may be transported to/from the in-flight aircraft through shuttle or other aircraft to facilitate longer duration flights.

**[2154]** Earth-bound operations such as drilling and mining that may have very limited access to cooking fuel or other commercially available fuel sources may be shown to benefit from the use of such a system. Equipment that transports materials, supplies, and workers to/from subterranean drill sites and mines may be equipped with such a system to facilitate preparation of food for the workers. Use of a fuel, such as hydrogen that produces no toxic exhaust may be well suited for use in drilling and mining environments.

**[2155]** Agricultural production, including harvesting, planting, and the like may also benefit from the deployment of hydrogen-based cooking and/or heating systems as described herein. Food preparation operations that may include heating or cooking freshly harvested foods may be shown to benefit from an automated or semi-automated hydrogen-based cooking system as described herein. Such a system may be deployed on or connected with a harvesting system, such as a produce harvester and the like so that cooking, preserving, sterilizing, pasteurizing, drying or optional storage operations may occur as the food is harvested. Other deployments, such as industrial cooking deployments, may include job-site deployment, food truck deployment, canteen truck deployment, food production pipelines, and the like. Yet other deployments, such as industrial cooking deployment may include residential environments, such as nursing homes, group homes, soup kitchens, school and business cafeterias, disaster relief food preparation stations, and the like.

**[2156]** The methods and systems of autonomous or semi-autonomous hydrogen production, storage, distribution, and use may be deployed as components in a smart power grid that may operate cooperatively with other components of a smart grid to attempt to deliver reliable energy available throughout the grid. In an example, a renewable energy-based hydrogen production system may utilize its renewable energy harvesting components to deliver electricity to a smart grid based on various factors, such as local demand for hydrogen and the like. When a renewable energy source is

available, yet hydrogen production is not called for (e.g., sufficient supply is stored, or an amount that is anticipated to be needed, such as based on machine learning or the like of prior local hydrogen demand over time is expected to be producible before needed), then electricity or the like produced from the renewable energy source could be fed back into the smart grid.

**[2157]** Other types of industrial applications of the methods and systems of hydrogen production, storage, distribution and use may include air and inline heaters, and the like. Exemplary environments may include deployment for aerospace operation and testing, such as component temperature testing, heating, hot air curing, and the like. Production of temperatures that emulate extremes associated with aerospace travel, such as earth atmosphere entry and the like could be replicated with such systems for use in component testing and the like.

**[2158]** Other industrial heating applications may include automotive production (e.g., heat treating components, heat shrinking and the like), automotive assembly (e.g., hot air bonding, etc.), automotive exterior and interior customization (e.g., hot air bonding of vinyl body panel covers, paint curing and the like), and automotive repair (e.g., reshaping dented plastic components, such as a bumper) and the like.

**[2159]** Yet other industrial heating applications may include packaging, sterilization, and the like. Particular packaging uses may include high-speed poly-coated paperboard sealing, high-speed heat shrink installations, material heat forming, curing adhesives, sterilizing bottles and cartons (e.g., through heating water and/or steam therefore), production and packaging of pharmaceuticals, sterilization and packaging of surgical tools and hardware, replacement dental features (e.g., crowns and the like), production and sealing of packaging material, and the like.

**[2160]** Paper and printing heating-related applications of the methods and systems described herein may include the production of coated paper, including speed drawing the coating, adhesive activation, ink drying, paper aging, pulp drying, and the like.

**[2161]** Plastics and rubber production heating applications that may be shown to benefit from the methods and systems described herein may include rubber extrusion salt removal, curing plastics, bending and forming plastic components, de-flashing of molded parts and the like.

**[2162]** The methods and systems described herein may be used to produce heat needed for some semiconductor and electronics production and assembly operations including soldering operations, such as air knife for wave soldering, heating of printed circuit boards, lead frames, components (e.g., capacitors) for soldering/desoldering, centralized source of heat for a multi-station desoldering system, wafer and PC board drying, heat shrink wire insulation, preheating process gases and the like. By way of these examples, soldering and/or brazing may require heating that may be provided by the hydrogen-based heating systems described herein. Heat for soldering and brazing may be generated locally at each brazing station or may be provided from a centralized source for multiple soldering operations, including manual and semi-manual operations.

**[2163]** Other heated air applications that may be suitable for application of a hydrogen-based system as described herein may include textiles industrial uses, such as welding plastic or vinyl fabrics, heat-treating specialty fabrics, heat sealing fabric shipping sleeves, bonding multi-ply fabrics and the like. Industrial hot air applications may include the exemplary embodiments described herein, but may also include other comparable applications, such as home fabric bonding, plastic sheet dispensing and the like in which heat is used to increase the temperature of air or devices to perform various functions.

**[2164]** In embodiments, the methods and systems described herein that relate to hydrogen production, storage, distribution, use, regulation, monitoring, control, energy conversion, and the like may also be used for heating operations including immersion, circulation and customer heating. Example applications include energy production environments where fuel sources for cooking and heating may be used, such as alternative fuels processing, chemical processing, mining and metals, oil, and gas, petrochemical, power generation, fuel storage, fuel distribution, heat exchangers, waste disposal, heated storage, and the like. Industrial applications may include biopharmaceutical processing, industrial equipment (such as temperature test chambers), engine block heaters, preheating industrial burners, furnaces, kilns and the like, medical equipment laboratory and analytic equipment, military and defense including weapons, personnel management, and other military uses, production of rubber and plastics through controlled heating of petrochemicals and the like, transportation (such as passenger compartment temperature regulation, preheat or temperature regulation of vehicle systems in extremely low temperature environments) and the like, water processing, waste water processing and the like. Commercial applications of the methods and systems described herein for use as heating for immersion, circulation and the like may include integration, connection or use with commercial food equipment, building and construction systems, commercial marine and shipping systems and environments, heat-powered cooling, refrigeration, air conditioning, and other cooling applications and the like.

**[2165]** In addition to cooking and air heating applications, the methods and systems of autonomous hydrolyzer operation, generated fuel storage, distribution and use described herein may also be applied to processes that use heat from a heating element that may be powered from the fuel (e.g., hydrogen and the like) produced from the hydrolyzer. Manufacturing operations may include pharmaceutical manufacturing, industrial food manufacturing, semiconductor manufacturing, and the like. Other heating element-like applications may include coating such as vinyl automotive panel wrapping, molding such as injection molding, heat staking, and the like, hard tooling, heating material for extrusion operations, combustion systems (such as flame-based combustion devices, e.g., burners that would improve on existing combustion methods including improving efficiency, cost, reduce or eliminate emissions), enhance heat transfer from combustion products to the material processed for a variety of applications, such as by applying a clean-burning fuel in proximity to the material being processed, other types of combustion systems (e.g., non-burner types) such as catalytic combustion, combustion systems that include heat recovery devices such as self-recuperative burners, and the like.

**[2166]** Other applications for heat-dependent operations that may be powered by the fuel produced from a hydrolyzer may include heat and power uses such as integrated heating systems such as super boilers and other applications that deliver both heat and power to an operation (e.g., super

pressurized steam systems, and the like). Other heat utilization applications may include heat production include use for testing materials such as products for mining (e.g., heat treating drilling machine elements), drying and moisture removal (such as clothes dryers, dehumidifiers, and the like). Other applications in which a hydrolyzer-based energy producing system may be used include heat as a catalyst for chemical reactions and processing including, without limitation chemical scrubbing of exhaust from industrial systems including petrochemical-based combustion systems, on-site production of chemicals, such as high-value petroleum products from lower grade, lower cost petroleum supplies, and the like.

**[2167]** Other applications that may benefit from the use of an autonomous hydrogen generation system as described herein may include desalination, such as local desalination systems for pleasure boats, ferries, and the like. Because of the high efficiency and potential for only using renewable energy sources, hydrogen generation-based desalination systems may be fully self-operative, producing hydrogen directly from a source of water being desalinated.

**[2168]** Yet other applications include using heat to power carbon capture, purification of material and systems such as a palladium electrolyzer, and the like. Industrial washing systems, such as laundry, preheating boiler water feeds, sterilizing, sanitation, and cleaning processes for clothing, uniforms, safety gear, hospital and medical care facilities (e.g., floors and the like) may also be target applications for systems that include, connect to, or integrate hydrogen production, storage, and distribution, including systems that are powered by renewable energy sources and the like.

**[2169]** Filtering and purifying materials and equipment used in various processes, such as food service, food manufacturing, pharmaceutical production and handling, livestock handling and processing and the like are also candidate application environments for the methods and systems described herein. In production environments that may rely on highly purified materials, such a system may be applied to provide the necessary heating or energy required. In embodiments, the methods and systems described herein may be applied to corrosion and hydrogen embrittlement activities.

**[2170]** Referring to FIG. **285** environments and manufacturing uses of hydrogen production, storage, distribution, and use systems are depicted. As described above herein, hydrogen system **5701** may be deployed in environments including industrial cooking **6006**, industrial air heaters and inline heaters **6009**, and industrial environments **6011**. A hydrogen system **5701** may also be used in manufacturing use cases **6005**, such as heat used in manufacturing processes **6013**. Deployment in environments **6003** and manufacturing uses **6005** may overlap, resulting in a hydrogen system **5701** operating in combinations of environment and use that are depicted in FIG. **285** and described herein.

**[2171]** The methods and systems described herein may be used to provide hydrogen directly from a hydrolyzer for certain uses including uses that do not require the introduction of oxygen. In such embodiments that may only require a hydrogen gas, the hydrogen may be produced and sent directly for real-time uses such as a burner for heating, industrial heating processes like welding and brazing, and all other use cases that require direct-use hydrogen. Some other cases may include coating, tooling, extrusion, drying and the like. The methods and systems described herein may produce high-quality hydrogen gas for applications that require it, such as laser cutting. Other uses may include the production of hydrogen gas that may then be combined with other combustible gases for operations such as to generate a flame suitable for welding, for supplying an oxyhydrogen torch, and the like.

**[2172]** In applications where both the separated hydrogen and separated oxygen may be required for different purposes, the generation, storage, distribution and/or heating (e.g., cooking) system may direct independently both gases to their appropriate process uses. An example could be an electrolyzer on a submarine where the hydrogen may be used for a burner, and the oxygen used in the submarines air circulation system, and the like. In yet other embodiments the oxygen and hydrogen that have been separated during the hydrolysis process may need to be recombined under a protocol that produces a desired combination and rate of the combination of oxygen and hydrogen. One such example is Oxy-Hydrogen welding.

**[2173]** In embodiments, other examples of time-shifted uses of electrolyzer products that may benefit from and/or include hydrogen storage may include storing hydrogen in its non-compressed state, in its gaseous state, in its compressed liquid state or combinations thereof in a small tank that is part of a cooking or other industrial system, in a larger tank on or near the cooking system, or transported to very large holding tanks at a facility that is not nearby. Further examples of hydrogen storage technology may include absorbing the hydrogen by a substrate. The substrate may then be stored in a small tank or other substrate storage facility that may be part of the cooking system, in a larger tank on or near the cooking system, transported to very large holding tanks at a facility that is not nearby, or distributed across a plurality of small, medium, and large storage facilities that may facilitate local access to the stored energy. At the appropriate time, the substrate may be heated and the hydrogen may return to its original gaseous state.

**[2174]** Cooking and other heating systems that may use hydrogen as one of a plurality of sources of fuel may participate in automatically selecting among the sources of fuel. These systems may include processing capabilities that are connected to various information sources that may provide data regarding factors that may be beneficial to consider when determining which energy source to select. Determining which energy source to select may be based, for example on a single factor, such as a current price for one or more of the sources of energy. An energy source that provides sufficient energy at a lowest current price may be selected. In embodiments, a cooking or other heating system may automatically, under computer control, be configured for the selected source of energy. In an example, if hydrogen is selected, connections to a source of hydrogen may be activated, while connections to other sources may be deactivated. Likewise, burners, heater controls, heat and safety profiles, cooking times, and a range of other factors may be automatically adjusted based on the selected energy source. If during a cooking or heating operation, another source of energy is found to be less costly (such as electricity), systems may automatically be reconfigured for use of the other source of energy. Gas-fired heaters may be disabled and electric heating elements may be energized to continue the cooking and/or heating operation with minimal interruption. Such hybrid energy source cooking and/or heating

processes may require a distinct protocol for completing a cooking or heating process based on the new source of energy.

**[2175]** Alternatively, automatic selection of a fuel source may be based on a multitude of factors. These factors may be applied to a fuel source selection algorithm that may process individually, in groups, or in combination a portion of the factors. Example factors may include the price of other energy sources, including energy sources that are available to the cooking and heating system as well as those that are not directly available. In this way, selecting an energy source may be driven by other considerations, such as which energy source is better for the environment, and the like. In embodiments, an automatic energy source selection may be based, at least in part on the anticipated availability of an energy source. In embodiments, predictions of energy outage, such as brownouts, may be based on a range of factors, including direct knowledge of scheduled brownouts and the like. Such predictions may also be based on prior experience regarding the availability of the source(s) of energy, which may be applied to machine learning algorithms that may provide predictions of future energy availability. Yet other factors that may be applied to an algorithm for automatically determining a source of energy may include availability of a source of water for producing hydrogen, availability of renewable energy (e.g., based on a forecast for sunlight, winds, and the like), level and/or intensity of need of the energy, anticipate level of need over a future period of time, such as the next 24 hours and the like. If an anticipate need over a future period of time includes large swings in demand over that timeframe, each peak in demand may be individually analyzed. Alternatively, an average or other derivatives of the demand over time may be used to determine a weighting for the various sources of energy.

**[2176]** In addition to energy selection for direct application to cooking and heating, energy selection for operating a hydrolyzer to produce hydrogen may be automated. Energy sources that may be included in such an automated selection process may include solar energy, wind energy, hydrogen energy, sulfur dioxide, electricity (such as from an electricity grid), natural gas, and the like. In embodiments, an algorithm that may facilitate automatic energy selection may receive information about each energy source, such as availability, costs, efficiency, and the like that may be processed by, for example comparing the information to determine which energy source provides the best fit for operating the hydrolyzer in a given time period. By way of this example, the algorithm may favor energy sources that are more reliable, more available, and lower costs than those that are less reliable, less available, and costlier. In embodiments, combinations of these three factors may result in certain sources being selected. If a demand for reliable energy at a particular time is weighted more highly than price, for example, a costlier energy source may be automatically selected due to it being more reliably available. An automatic fuel selection algorithm may also produce recommendations for fuel selection and a human or other automated process may make a selection. In an example, an automated fuel selection algorithm may recommend a fuel that is less costly, but may be somewhat less reliable than another source; however given the weighting or other aspects of the available information about the sources, such a recommendation may meet acceptance criteria of the algorithm.

**[2177]** Methods and systems described herein may be associated with methods and systems for automatic selection of an energy source, such as a method for determining an optimal use of renewable energy (such as solar, wind, geothermal, hydro and the like) or non-renewable fuel. In embodiments, a selection of energy source to power an onsite, stand alone cooking or heating system may be based on a variety of factors including access and distance to a source of renewable energy source as a primary source, directly to the cooking system. As an example, while production cost data available regarding hydro-based renewable energy may support its selection, a delivery network may not be in place or may charge a substantive premium for access to that particular renewable source; therefore hydro-based renewable energy may not be an optimal use.

**[2178]** In embodiments, other factors include pricing and amount of electricity required to use the cooking system and electrolyzer and the; ability of the source to match up availability with demand for generated power is required for both sustained periods of usage as well as short-term requirements. In embodiments, other factors that may impact an automated energy source selection process may include availability and ability to reuse excess heat from the cooking system and/or other nearby industrial facilities. In embodiments, excess heat may include exhaust heat, sulfur dioxide byproduct and the like that may be used to generate heat through a heat exchange process. In embodiments, another set of criteria for determining which energy source may be optimal for use by a cooking system as described herein may include comparing the need for short-term accessibility to power at arbitrary times throughout the day, compared to limiting timing of demand to power given timing and availability of power sources, such as nearby power sources. Sulfur dioxide as a waste heat byproduct may be used in a heat transfer process to recapture heat from the sulfur dioxide gas; however, it may also be applied directly to the hydrolyzer system to produce hydrogen. In embodiments, the sulfur dioxide gas may be applied directly to the hydrolyzer system to produce hydrogen and reduce the sulfur dioxide gas as a tool for environmental abatement by reducing the amount of the sulfur dioxide gas and use the generated hydrogen to burn trash and other items for its removal, for electricity generation, and the like.

**[2179]** In embodiments, external systems, such as information systems may be associated with or connected to hydrogen production, storage, distribution, and use systems as described herein. Information systems may receive information from all aspects and system processes including, energy selection (such as automated energy selection) including actual results as compared to predicted results, energy consumption, hydrogen generation for each type of energy source (solar, hydro-based, wind, exhaust gas, including sulfur dioxide use, and the like), hydrogen refinement processes, hydrogen storage (including compressed, natural state storage, substrate infusion-based, and the like), hydrogen distribution, uses, combinations with other fuel sources (such as hydrogen with another flammable energy medium) and the like, uses of the hydrogen including timing, costs, application environment, and the like.

**[2180]** In embodiments, communication to and from external systems may be through exchange of messages that

may facilitate remote monitoring, remote control and the like. By way of this example, messages may include information about a source of the message, a destination, an objective (e.g., control, monitoring, and the like), recommended actions to take, alternate actions to take, actions to avoid, and the like.

**[2181]** In embodiments, methods and systems related to hydrogen production, storage, distribution and use may include, be associated with, or integrate improvement features that may provide ongoing improvements in system performance, quality and the like. In embodiments, improvement features may include process control and heat recovery, flow control and precision control, safety, reliability and greater service availability, process and output quality including output consistency. Other features that may be provided and/or be integrated with the hydrogen-based systems described herein may include data collection, analysis, and modeling for improvement, data security, cyber security, network security to avoid external attacks on control systems and the like, monitoring and analysis to facilitate preventive maintenance and repair.

**[2182]** In embodiments, integration and/or access to data processing systems that also have access to third-party data may be included in the methods and systems described herein. By monitoring data collected from sensors, time of day, weather conditions, and other data sources may be used with specific rule sets to trigger activation and/or stoppage of hydrogen use (e.g., cooking) operations. In embodiments, data may be accumulated in a continuous feedback loop that may capture data for a range of metrics associated with operations, such as cooking operations and the like. In embodiments, analysis and control of activation of such a system may factor in the actual requirements and timing when a cooking system needs to be used (such as when a meal is being prepared, such as breakfast, or when heating is required for an industrial operation, such as at the start of a new work shift and the like.

**[2183]** In embodiments, data collection, monitoring, process improvement, quality improvement, and the like may also be performed during operation of such a system. In an example, once a cooking system is activated, the system may be able to determine the best way to receive the heat required to perform the process at hand at that particular moment in time. Receiving the heat required to perform the process may be selected from a variety of heat sources including in-line hydrogen production, stored hydrogen consumption, combined energy utilization and the like. In embodiments, cooking elements with a mix of hydrogen and non-hydrogen heat burners may be automatically controllable so that the system should be able to automatically, using machine learning for example and continuous monitoring, decide to use one or the other source or a combination thereof.

**[2184]** Further in this example, a smart cooktop may include burners for hydrogen and for liquid propane. In embodiments, methods and systems for cooking operation may automatically activate the appropriate burner based on fuel selection (e.g., hydrogen burner or the liquid propane burner.). Operating such a cooking or heating system may be done by a computer enabled controller that may process factors including time of day, spot-pricing energy costs for each alternative, length of process involved, meeting 100% green requirements, potential hazardous use of flame depending on location of cooking system, other security features, and the like. To faciliate continuous improvement during operational control, data analysis may be performed on any or all aspects of the system. In an example, if the electrolyzer is not activated, sensors may capture information about the liquid propane burner that is being used. In embodiments, this single data capture example indicates that while it is desirable to collect information about all operational aspects to avoid missing information, practical considerations enable more focused data collection and analysis. In embodiments, every activity and action by the cooking system and heating element may be captured, recorded, measured, and used to inform actions such as quality improvement and the like.

**[2185]** In embodiments, information may be provided for one or more deployments of this cooking system to facilitate self-improvement and real-time decision making. In embodiments, information captured may also be stored and used in time-series analysis and the like to determine patterns that may indicate opportunities for improvement. In embodiments, data captured for a plurality of deployments may be used for creating and updating models that may be used for computer-generated simulations and the like. These models may be applied to design processes and the like. In embodiments, continuous improvement modifications may be activated by machine-to-machine learning programs, human improvement efforts, instructional improvement and/or modifications, and the like.

**[2186]** While the foregoing written description enables one skilled in the art to make and use what is considered presently to be the best mode thereof, those skilled in the art will understand and appreciate the existence of variations, combinations, and equivalents of the specific embodiment, method, and examples herein. The disclosure should therefore not be limited by the above described embodiment, method, and examples, but by all embodiments and methods within the scope and spirit of the disclosure.

**[2187]** The methods and systems described herein may be deployed in part or in whole through a machine that executes computer software, program codes, and/or instructions on a processor. The present disclosure may be implemented as a method on the machine, as a system or apparatus as part of or in relation to the machine, or as a computer program product embodied in a computer readable medium executing on one or more of the machines. In embodiments, the processor may be part of a server, cloud server, client, network infrastructure, mobile computing platform, stationary computing platform, or other computing platform. A processor may be any kind of computational or processing device capable of executing program instructions, codes, binary instructions, and the like. The processor may be or may include a signal processor, digital processor, embedded processor, microprocessor, or any variant such as a co-processor (math co-processor, graphic co-processor, communication co-processor, and the like) and the like that may directly or indirectly facilitate execution of program code or program instructions stored thereon. In addition, the processor may enable execution of multiple programs, threads, and codes. The threads may be executed simultaneously to enhance the performance of the processor and to facilitate simultaneous operations of the application. By way of implementation, methods, program codes, program instructions, and the like described herein may be implemented in one or more thread. The thread may spawn other threads that may have assigned priorities associated with them; the

processor may execute these threads based on priority or any other order based on instructions provided in the program code. The processor, or any machine utilizing one, may include non-transitory memory that stores methods, codes, instructions, and programs as described herein and elsewhere. The processor may access a non-transitory storage medium through an interface that may store methods, codes, and instructions as described herein and elsewhere. The storage medium associated with the processor for storing methods, programs, codes, program instructions, or other type of instructions capable of being executed by the computing or processing device may include but may not be limited to one or more of a CD-ROM, DVD, memory, hard disk, flash drive, RAM, ROM, cache, and the like.

**[2188]** A processor may include one or more cores that may enhance speed and performance of a multiprocessor. In embodiments, the process may be a dual core processor, quad core processors, other chip-level multiprocessor and the like that combine two or more independent cores (called a die).

**[2189]** The methods and systems described herein may be deployed in part or in whole through a machine that executes computer software on a server, client, firewall, gateway, hub, router, or other such computer and/or networking hardware. The software program may be associated with a server that may include a file server, print server, domain server, internet server, intranet server, cloud server, and other variants such as secondary server, host server, distributed server, and the like. The server may include one or more of memories, processors, computer readable transitory and/or non-transitory media, storage media, ports (physical and virtual), communication devices, and interfaces capable of accessing other servers, clients, machines, and devices through a wired or a wireless medium, and the like. The methods, programs, or codes as described herein and elsewhere may be executed by the server. In addition, other devices required for execution of methods as described in this application may be considered as a part of the infrastructure associated with the server.

**[2190]** The server may provide an interface to other devices including, without limitation, clients, other servers, printers, database servers, print servers, file servers, communication servers, distributed servers, social networks, and the like. Additionally, this coupling and/or connection may facilitate remote execution of program across the network. The networking of some or all of these devices may facilitate parallel processing of a program or method at one or more locations without deviating from the scope of the disclosure. In addition, any of the devices attached to the server through an interface may include at least one storage medium capable of storing methods, programs, code, and/or instructions. A central repository may provide program instructions to be executed on different devices. In this implementation, the remote repository may act as a storage medium for program code, instructions, and programs.

**[2191]** The software program may be associated with a client that may include a file client, print client, domain client, internet client, intranet client, and other variants such as secondary client, host client, distributed client, and the like. The client may include one or more of memories, processors, computer readable transitory and/or non-transitory media, storage media, ports (physical and virtual), communication devices, and interfaces capable of accessing other clients, servers, machines, and devices through a wired or a wireless medium, and the like. The methods, programs, or codes as described herein and elsewhere may be executed by the client. In addition, other devices required for execution of methods as described in this application may be considered as a part of the infrastructure associated with the client.

**[2192]** The client may provide an interface to other devices including, without limitation, servers, other clients, printers, database servers, print servers, file servers, communication servers, distributed servers, and the like. Additionally, this coupling and/or connection may facilitate remote execution of a program across the network. The networking of some or all of these devices may facilitate parallel processing of a program or method at one or more location without deviating from the scope of the disclosure. In addition, any of the devices attached to the client through an interface may include at least one storage medium capable of storing methods, programs, applications, code, and/or instructions. A central repository may provide program instructions to be executed on different devices. In this implementation, the remote repository may act as a storage medium for program code, instructions, and programs.

**[2193]** In embodiments, one or more of the controllers, circuits, systems, data collectors, storage systems, network elements, components, or the like as described throughout this disclosure may be embodied in or on an integrated circuit, such as an analog, digital, or mixed signal circuit, such as a microprocessor, a programmable logic controller, an application-specific integrated circuit, a field programmable gate array, or other circuit, such as embodied on one or more chips disposed on one or more circuit boards, such as to provide in hardware (with potentially accelerated speed, energy performance, input-output performance, or the like) one or more of the functions described herein. This may include setting up circuits with up to billions of logic gates, flip-flops, multiplexers, and other circuits in a small space, facilitating high speed processing, low power dissipation, and reduced manufacturing cost compared with board-level integration. In embodiments, a digital IC, typically a microprocessor, digital signal processor, microcontroller, or the like may use Boolean algebra to process digital signals to embody complex logic, such as involved in the circuits, controllers, and other systems described herein. In embodiments, a data collector, an expert system, a storage system, or the like may be embodied as a digital integrated circuit ("IC"), such as a logic IC, memory chip, interface IC (e.g., a level shifter, a serializer, a deserializer, and the like), a power management IC and/or a programmable device; an analog integrated circuit, such as a linear IC, RF IC, or the like, or a mixed signal IC, such as a data acquisition IC (including A/D converters, D/A converter, digital potentiometers) and/or a clock/timing IC.

**[2194]** The methods and systems described herein may be deployed in part or in whole through network infrastructures. The network infrastructure may include elements such as computing devices, servers, routers, hubs, firewalls, clients, personal computers, communication devices, routing devices and other active and passive devices, modules and/or components as known in the art. The computing and/or non-computing device(s) associated with the network infrastructure may include, apart from other components, a storage medium such as flash memory, buffer, stack, RAM, ROM, and the like. The processes, methods, program codes, instructions described herein and elsewhere may be

executed by one or more of the network infrastructural elements. The methods and systems described herein may be configured for use with any kind of private, community, or hybrid cloud computing network or cloud computing environment, including those which involve features of software as a service ("SaaS"), platform as a service ("PaaS"), and/or infrastructure as a service ("IaaS").

**[2195]** The methods, program codes, and instructions described herein and elsewhere may be implemented on a cellular network having multiple cells. The cellular network may either be frequency division multiple access ("FDMA") network or code division multiple access ("CDMA") network. The cellular network may include mobile devices, cell sites, base stations, repeaters, antennas, towers, and the like. The cell network may be a GSM, GPRS, 3G, EVDO, mesh, or other networks types.

**[2196]** The methods, program codes, and instructions described herein and elsewhere may be implemented on or through mobile devices. The mobile devices may include navigation devices, cell phones, mobile phones, mobile personal digital assistants, laptops, palmtops, netbooks, pagers, electronic books readers, music players and the like. These devices may include, apart from other components, a storage medium such as a flash memory, buffer, RAM, ROM and one or more computing devices. The computing devices associated with mobile devices may be enabled to execute program codes, methods, and instructions stored thereon. Alternatively, the mobile devices may be configured to execute instructions in collaboration with other devices. The mobile devices may communicate with base stations interfaced with servers and configured to execute program codes. The mobile devices may communicate on a peer-to-peer network, mesh network, or other communications network. The program code may be stored on the storage medium associated with the server and executed by a computing device embedded within the server. The base station may include a computing device and a storage medium. The storage device may store program codes and instructions executed by the computing devices associated with the base station.

**[2197]** The computer software, program codes, and/or instructions may be stored and/or accessed on machine readable transitory and/or non-transitory media that may include: computer components, devices, and recording media that retain digital data used for computing for some interval of time; semiconductor storage known as random access memory ("RAM"); mass storage typically for more permanent storage, such as optical discs, forms of magnetic storage like hard disks, tapes, drums, cards and other types; processor registers, cache memory, volatile memory, non-volatile memory; optical storage such as CD, DVD; removable media such as flash memory (e.g., USB sticks or keys), floppy disks, magnetic tape, paper tape, punch cards, standalone RAM disks, zip drives, removable mass storage, off-line, and the like; other computer memory such as dynamic memory, static memory, read/write storage, mutable storage, read only, random access, sequential access, location addressable, file addressable, content addressable, network attached storage, storage area network, bar codes, magnetic ink, and the like.

**[2198]** The methods and systems described herein may transform physical and/or or intangible items from one state to another. The methods and systems described herein may also transform data representing physical and/or intangible items from one state to another.

**[2199]** The elements described and depicted herein, including in flow charts and block diagrams throughout the Figures, imply logical boundaries between the elements. However, according to software or hardware engineering practices, the depicted elements and the functions thereof may be implemented on machines through computer executable transitory and/or non-transitory media having a processor capable of executing program instructions stored thereon as a monolithic software structure, as standalone software modules, or as modules that employ external routines, code, services, and so forth, or any combination of these, and all such implementations may be within the scope of the present disclosure. Examples of such machines may include, but may not be limited to, personal digital assistants, laptops, personal computers, mobile phones, other handheld computing devices, medical equipment, wired or wireless communication devices, transducers, chips, calculators, satellites, tablet PCs, electronic books, gadgets, electronic devices, devices having artificial intelligence, computing devices, networking equipment, servers, routers, and the like. Furthermore, the elements depicted in the flow chart and block diagrams or any other logical component may be implemented on a machine capable of executing program instructions. Thus, while the foregoing drawings and descriptions set forth functional aspects of the disclosed systems, no particular arrangement of software for implementing these functional aspects should be inferred from these descriptions unless explicitly stated or otherwise clear from the context. Similarly, it will be appreciated that the various steps identified and described above may be varied, and that the order of steps may be adapted to particular applications of the techniques disclosed herein. All such variations and modifications are intended to fall within the scope of this disclosure. As such, the depiction and/or description of an order for various steps should not be understood to require a particular order of execution for those steps, unless required by a particular application, or explicitly stated or otherwise clear from the context.

**[2200]** The methods and/or processes described above, and steps associated therewith, may be realized in hardware, software or any combination of hardware and software suitable for a particular application. The hardware may include a general-purpose computer and/or dedicated computing device or specific computing device or particular aspect or component of a specific computing device. The processes may be realized in one or more microprocessors, microcontrollers, embedded microcontrollers, programmable digital signal processors or other programmable device, along with internal and/or external memory. The processes may also, or instead, be embodied in an application specific integrated circuit, a programmable gate array, programmable array logic, or any other device or combination of devices that may be configured to process electronic signals. It will further be appreciated that one or more of the processes may be realized as a computer executable code capable of being executed on a machine-readable medium.

**[2201]** The computer executable code may be created using a structured programming language such as C, an object oriented programming language such as C++, or any other high-level or low-level programming language (including assembly languages, hardware description languages, and database programming languages and technolo-

gies) that may be stored, compiled or interpreted to run on one of the above devices, as well as heterogeneous combinations of processors, processor architectures, or combinations of different hardware and software, or any other machine capable of executing program instructions.

**[2202]** Thus, in one aspect, methods described above and combinations thereof may be embodied in computer executable code that, when executing on one or more computing devices, performs the steps thereof. In another aspect, the methods may be embodied in systems that perform the steps thereof, and may be distributed across devices in a number of ways, or all of the functionality may be integrated into a dedicated, standalone device or other hardware. In another aspect, the means for performing the steps associated with the processes described above may include any of the hardware and/or software described above. All such permutations and combinations are intended to fall within the scope of the present disclosure.

**[2203]** While the disclosure has been disclosed in connection with the preferred embodiments shown and described in detail, various modifications and improvements thereon will become readily apparent to those skilled in the art. Accordingly, the spirit and scope of the present disclosure is not to be limited by the foregoing examples, but is to be understood in the broadest sense allowable by law.

**[2204]** The use of the terms "a" and "an" and "the" and similar referents in the context of describing the disclosure (especially in the context of the following claims) is to be construed to cover both the singular and the plural, unless otherwise indicated herein or clearly contradicted by context. The terms "comprising," "having," "including," and "containing" are to be construed as open-ended terms (i.e., meaning "including, but not limited to,") unless otherwise noted. Recitation of ranges of values herein are merely intended to serve as a shorthand method of referring individually to each separate value falling within the range, unless otherwise indicated herein, and each separate value is incorporated into the specification as if it were individually recited herein. All methods described herein can be performed in any suitable order unless otherwise indicated herein or otherwise clearly contradicted by context. The use of any and all examples, or exemplary language (e.g., "such as") provided herein, is intended merely to better illuminate the disclosure, and does not pose a limitation on the scope of the disclosure unless otherwise claimed. No language in the specification should be construed as indicating any non-claimed element as essential to the practice of the disclosure.

**[2205]** Implementations of approaches described above may include software implementations, which use software instructions stored on non-transitory machine-readable media. The procedures and protocols as described above in the text and figures are sufficient for one skilled in the art to implement them in such software implementations. In some examples, the software may execute on a client node (e.g., a smartphone) using a general-purpose processor that implements a variety of functions on the client node. Software that executes on end nodes or intermediate network nodes may use processors that are dedicated to processing network traffic, for example, being embedded in network processing devices. In some implementations, certain functions may be implemented in hardware, for example, using Application-Specific Integrated Circuits (ASICs), and/or Field Programmable Gate Arrays (FPGAs), thereby reducing the load on a general purpose processor.

**[2206]** Note that in some diagrams and figures in this disclosure, networks such as the internet, carrier networks, internet service provider networks, local area networks (LANs), metro area networks (MANs), wide area networks (WANs), storage area networks (SANs), backhaul networks, cellular networks, satellite networks and the like, may be depicted as clouds. Also note, that certain processes may be referred to as taking place in the cloud and devices may be described as accessing the cloud. In these types of descriptions, the cloud should be understood to be some type of network comprising networking equipment and wireless and/or wired links.

**[2207]** The description above may refer to a client device communicating with a server, but it should be understood that the technology and techniques described herein are not limited to those exemplary devices as the end-points of communication connections or sessions. The end-points may also be referred to as, or may be, senders, transmitters, transceivers, receivers, servers, video servers, content servers, proxy servers, cloud storage units, caches, routers, switches, buffers, mobile devices, tablets, smart phones, handsets, computers, set-top boxes, modems, gaming systems, nodes, satellites, base stations, gateways, satellite ground stations, wireless access points, and the like. The devices at any of the end-points or intermediate nodes of communication connections or sessions may be commercial media streaming boxes such as those implementing Apple TV, Roku, Chromecast, Amazon Fire, Slingbox, and the like, or they may be custom media streaming boxes. The devices at the any of the end-points or intermediate nodes of communication connections or sessions may be smart televisions and/or displays, smart appliances such as hubs, refrigerators, security systems, power panels and the like, smart vehicles such as cars, boats, busses, trains, planes, carts, and the like, and may be any device on the Internet of Things (IoT). The devices at any of the end-points or intermediate nodes of communication connections or sessions may be single-board computers and/or purpose built computing engines comprising processors such as ARM processors, video processors, system-on-a-chip (SoC), and/or memory such as random access memory (RAM), read only memory (ROM), or any kind of electronic memory components.

**[2208]** Communication connections or sessions may exist between two routers, two clients, two network nodes, two servers, two mobile devices, and the like, or any combination of potential nodes and/or end-point devices. In many cases, communication sessions are bi-directional so that both end-point devices may have the ability to send and receive data. While these variations may not be stated explicitly in every description and exemplary embodiment in this disclosure, it should be understood that the technology and techniques we describe herein are intended to be applied to all types of known end-devices, network nodes and equipment and transmission links, as well as to future end-devices, network nodes and equipment and transmission links with similar or improved performance.

**[2209]** The methods and systems described herein may be deployed in part or in whole through a machine that executes computer software, program codes, and/or instructions on a processor. The present disclosure may be implemented as a

method on the machine, as a system or apparatus as part of or in relation to the machine, or as a computer program product embodied in a computer readable medium executing on one or more of the machines. In embodiments, the processor may be part of a server, cloud server, client, network infrastructure, mobile computing platform, stationary computing platform, or other computing platforms. A processor may be any kind of computational or processing device capable of executing program instructions, codes, binary instructions, and the like. The processor may be or may include a signal processor, digital processor, embedded processor, microprocessor, or any variant such as a co-processor (math co-processor, graphic co-processor, communication co-processor, and the like) and the like that may directly or indirectly facilitate execution of program code or program instructions stored thereon. In addition, the processor may enable execution of multiple programs, threads, and codes. The threads may be executed simultaneously to enhance the performance of the processor and to facilitate simultaneous operations of the application. By way of implementation, methods, program codes, program instructions and the like described herein may be implemented in one or more thread. The thread may spawn other threads that may have assigned priorities associated with them; the processor may execute these threads based on priority or any other order based on instructions provided in the program code. The processor, or any machine utilizing one, may include non-transitory memory that stores methods, codes, instructions, and programs as described herein and elsewhere. The processor may access a non-transitory storage medium through an interface that may store methods, codes, and instructions as described herein and elsewhere. The storage medium associated with the processor for storing methods, programs, codes, program instructions or other type of instructions capable of being executed by the computing or processing device may include but may not be limited to one or more of a CD-ROM, DVD, memory, hard disk, flash drive, RAM, ROM, cache, and the like.

**[2210]** A processor may include one or more cores that may enhance speed and performance of a multiprocessor. In embodiments, the process may be a dual core processor, quad core processors, other chip-level multiprocessor and the like that combine two or more independent cores (called a die).

**[2211]** The methods and systems described herein may be deployed in part or in whole through a machine that executes computer software on a server, client, firewall, gateway, hub, router, or other such computer and/or networking hardware. The software program may be associated with a server that may include a file server, print server, domain server, internet server, intranet server, cloud server, and other variants such as secondary server, host server, distributed server, and the like. The server may include one or more of memories, processors, computer readable transitory and/or non-transitory media, storage media, ports (physical and virtual), communication devices, and interfaces capable of accessing other servers, clients, machines, and devices through a wired or a wireless medium, and the like. The methods, programs, or codes as described herein and elsewhere may be executed by the server. In addition, other devices required for execution of methods as described in this application may be considered as a part of the infrastructure associated with the server.

**[2212]** The server may provide an interface to other devices including, without limitation, clients, other servers, printers, database servers, print servers, file servers, communication servers, distributed servers, social networks, and the like. Additionally, this coupling and/or connection may facilitate remote execution of program across the network. The networking of some or all of these devices may facilitate parallel processing of a program or method at one or more location without deviating from the scope of the disclosure. In addition, any of the devices attached to the server through an interface may include at least one storage medium capable of storing methods, programs, code and/or instructions. A central repository may provide program instructions to be executed on different devices. In this implementation, the remote repository may act as a storage medium for program code, instructions, and programs.

**[2213]** The software program may be associated with a client that may include a file client, print client, domain client, internet client, intranet client and other variants such as secondary client, host client, distributed client, and the like. The client may include one or more of memories, processors, computer readable transitory and/or non-transitory media, storage media, ports (physical and virtual), communication devices, and interfaces capable of accessing other clients, servers, machines, and devices through a wired or a wireless medium, and the like. The methods, programs, or codes as described herein and elsewhere may be executed by the client. In addition, other devices required for execution of methods as described in this application may be considered as a part of the infrastructure associated with the client.

**[2214]** The client may provide an interface to other devices including, without limitation, servers, other clients, printers, database servers, print servers, file servers, communication servers, distributed servers, and the like. Additionally, this coupling and/or connection may facilitate remote execution of program across the network. The networking of some or all of these devices may facilitate parallel processing of a program or method at one or more location without deviating from the scope of the disclosure. In addition, any of the devices attached to the client through an interface may include at least one storage medium capable of storing methods, programs, applications, code and/or instructions. A central repository may provide program instructions to be executed on different devices. In this implementation, the remote repository may act as a storage medium for program code, instructions, and programs.

**[2215]** The methods and systems described herein may be deployed in part or in whole through network infrastructures. The network infrastructure may include elements such as computing devices, servers, routers, hubs, firewalls, clients, personal computers, communication devices, routing devices and other active and passive devices, modules and/or components as known in the art. The computing and/or non-computing device(s) associated with the network infrastructure may include, apart from other components, a storage medium such as flash memory, buffer, stack, RAM, ROM, and the like. The processes, methods, program codes, instructions described herein and elsewhere may be executed by one or more of the network infrastructural elements. The methods and systems described herein may be adapted for use with any kind of private, community, or hybrid cloud computing network or cloud computing environment, including those which involve features of software

as a service ("SaaS"), platform as a service ("PaaS"), and/or infrastructure as a service ("IaaS").

**[2216]** The methods, program codes, and instructions described herein and elsewhere may be implemented on a cellular network having multiple cells. The cellular network may either be frequency division multiple access ("FDMA") network or code division multiple access ("CDMA") network. The cellular network may include mobile devices, cell sites, base stations, repeaters, antennas, towers, and the like. The cell network may be a GSM, GPRS, 3G, EVDO, mesh, or other networks types.

**[2217]** The methods, program codes, and instructions described herein and elsewhere may be implemented on or through mobile devices. The mobile devices may include navigation devices, cell phones, mobile phones, mobile personal digital assistants, laptops, palmtops, netbooks, pagers, electronic books readers, music players and the like. These devices may include, apart from other components, a storage medium such as a flash memory, buffer, RAM, ROM and one or more computing devices. The computing devices associated with mobile devices may be enabled to execute program codes, methods, and instructions stored thereon. Alternatively, the mobile devices may be configured to execute instructions in collaboration with other devices. The mobile devices may communicate with base stations interfaced with servers and configured to execute program codes. The mobile devices may communicate on a peer-to-peer network, mesh network, or other communications network. The program code may be stored on the storage medium associated with the server and executed by a computing device embedded within the server. The base station may include a computing device and a storage medium. The storage device may store program codes and instructions executed by the computing devices associated with the base station.

**[2218]** The computer software, program codes, and/or instructions may be stored and/or accessed on machine readable transitory and/or non-transitory media that may include: computer components, devices, and recording media that retain digital data used for computing for some interval of time; semiconductor storage known as random access memory ("RAM"); mass storage typically for more permanent storage, such as optical discs, forms of magnetic storage like hard disks, tapes, drums, cards and other types; processor registers, cache memory, volatile memory, non-volatile memory; optical storage such as CD, DVD; removable media such as flash memory (e.g. USB sticks or keys), floppy disks, magnetic tape, paper tape, punch cards, standalone RAM disks, zip drives, removable mass storage, off-line, and the like; other computer memory such as dynamic memory, static memory, read/write storage, mutable storage, read only, random access, sequential access, location addressable, file addressable, content addressable, network attached storage, storage area network, bar codes, magnetic ink, and the like.

**[2219]** The methods and systems described herein may transform physical and/or intangible items from one state to another. The methods and systems described herein may also transform data representing physical and/or intangible items from one state to another.

**[2220]** The elements described and depicted herein, including in flow charts and block diagrams throughout the figures, imply logical boundaries between the elements. However, according to software or hardware engineering practices, the depicted elements and the functions thereof may be implemented on machines through computer executable transitory and/or non-transitory media having a processor capable of executing program instructions stored thereon as a monolithic software structure, as standalone software modules, or as modules that employ external routines, code, services, and so forth, or any combination of these, and all such implementations may be within the scope of the present disclosure. Examples of such machines may include, but may not be limited to, personal digital assistants, laptops, personal computers, mobile phones, other handheld computing devices, medical equipment, wired or wireless communication devices, transducers, chips, calculators, satellites, tablet PCs, electronic books, gadgets, electronic devices, devices having artificial intelligence, computing devices, networking equipment, servers, routers, and the like. Furthermore, the elements depicted in the flow chart and block diagrams or any other logical component may be implemented on a machine capable of executing program instructions. Thus, while the foregoing drawings and descriptions set forth functional aspects of the disclosed systems, no particular arrangement of software for implementing these functional aspects should be inferred from these descriptions unless explicitly stated or otherwise clear from the context. Similarly, it will be appreciated that the various steps identified and described above may be varied and that the order of steps may be adapted to particular applications of the techniques disclosed herein. All such variations and modifications are intended to fall within the scope of this disclosure. As such, the depiction and/or description of an order for various steps should not be understood to require a particular order of execution for those steps, unless required by a particular application, or explicitly stated or otherwise clear from the context.

**[2221]** The methods and/or processes described above, and steps associated therewith, may be realized in hardware, software or any combination of hardware and software suitable for a particular application. The hardware may include a general-purpose computer and/or dedicated computing device or specific computing device or particular aspect or component of a specific computing device. The processes may be realized in one or more microprocessors, microcontrollers, embedded microcontrollers, programmable digital signal processors or other programmable devices, along with internal and/or external memory. The processes may also, or instead, be embodied in an application specific integrated circuit, a programmable gate array, programmable array logic, or any other device or combination of devices that may be configured to process electronic signals. It will further be appreciated that one or more of the processes may be realized as a computer executable code capable of being executed on a machine-readable medium.

**[2222]** The computer executable code may be created using a structured programming language such as C, an object oriented programming language such as C++, or any other high-level or low-level programming language (including assembly languages, hardware description languages, and database programming languages and technologies) that may be stored, compiled or interpreted to run on one of the above devices, as well as heterogeneous combinations of processors, processor architectures, or combinations of different hardware and software, or any other machine capable of executing program instructions.

**[2223]** Thus, in one aspect, methods described above and combinations thereof may be embodied in computer executable code that, when executing on one or more computing devices, performs the steps thereof. In another aspect, the methods may be embodied in systems that perform the steps thereof, and may be distributed across devices in a number of ways, or all of the functionality may be integrated into a dedicated, standalone device or other hardware. In another aspect, the means for performing the steps associated with the processes described above may include any of the hardware and/or software described above. All such permutations and combinations are intended to fall within the scope of the present disclosure.

**[2224]** While the disclosure has been disclosed in connection with the preferred embodiments shown and described in detail, various modifications and improvements thereon will become readily apparent to those skilled in the art. Accordingly, the spirit and scope of the present disclosure is not to be limited by the foregoing examples but is to be understood in the broadest sense allowable by law.

**[2225]** The use of the terms "a," "an." and "the" and similar referents in the context of describing the disclosure (especially in the context of the following claims) is to be construed to cover both the singular and the plural unless otherwise indicated herein or clearly contradicted by context. The terms "comprising," "having," "including," and "containing" are to be construed as open-ended terms (i.e., meaning "including, but not limited to,") unless otherwise noted. Recitations of ranges of values herein are merely intended to serve as a shorthand method of referring individually to each separate value falling within the range, unless otherwise indicated herein, and each separate value is incorporated into the specification as if it were individually recited herein. All methods described herein may be performed in any suitable order unless otherwise indicated herein or otherwise clearly contradicted by context. The use of any and all examples, or exemplary language (e.g., "such as") provided herein, is intended merely to better illuminate the disclosure and does not pose a limitation on the scope of the disclosure unless otherwise claimed. No language in the specification should be construed as indicating any non-claimed element as essential to the practice of the disclosure.

**[2226]** Any element in a claim that does not explicitly state "means for" performing a specified function, or "step for" performing a specified function, is not to be interpreted as a "means" or "step" clause as specified in 35 U.S.C. § 112(f). In particular, any use of "step of" in the claims is not intended to invoke the provision of 35 U.S.C. § 112(f).

**[2227]** Persons of ordinary skill in the art may appreciate that numerous design configurations may be possible to enjoy the functional benefits of the inventive systems. Thus, given the wide variety of configurations and arrangements of embodiments of the present invention the scope of the invention is reflected by the breadth of the claims below rather than narrowed by the embodiments described above.

**[2228]** It is to be understood that the foregoing description is intended to illustrate and not to limit the scope of the invention, some aspects of which are defined by the scope of the appended claims. Furthermore, other embodiments are within the scope of the following claims.

What is claimed is:

**1**. A monitoring system for data collection in an industrial drilling environment, the system comprising:

a data collector communicatively coupled to a plurality of input channels, wherein a subset of the plurality of input channels are communicatively coupled to sensors measuring operational parameters from an industrial drilling component;

a data storage structured to store a plurality of collector routes and collected data that correspond to the plurality of input channels, wherein the plurality of collector routes each comprise a different data collection routine;

a data acquisition circuit structured to interpret a plurality of detection values from the collected data, each of the plurality of detection values corresponding to at least one of the plurality of input channels;

a data analysis circuit structured to analyze the collected data from the plurality of input channels to detect an anomalous condition associated with the industrial drilling component; and

a data response circuit structured to switch one of the data collection routines from a first data collection routine to a second collection routine based on the detection of the anomalous condition.

**2**. The system of claim **1**, wherein the anomalous condition is a pre-failure mode condition for the industrial drilling component.

**3**. The system of claim **1**, wherein the second collection routine comprises data collector input channels coupled to sensors measuring additional operational parameters from the industrial drilling component relative to the first data collection routine.

**4**. The system of claim **1**, wherein one of the plurality of input channels is connected to a tri-axial sensor connected to multiple input channels for monitoring different positions associated with the industrial drilling component.

**5**. The system of claim **1**, wherein one of the plurality of input channels provides for a gap-free digital waveform from which the data analysis circuit detects the anomalous condition.

**6**. The system of claim **1**, wherein the data analysis circuit is further structured to analyze at least two of the plurality of input channels, to determine a relative phase value between the at least two of the plurality of input channels, and to detect the anomalous condition in response to the relative phase difference.

**7**. The system of claim **1**, wherein the industrial drilling component comprises a rotating component, and wherein the data analysis circuit is further structured to perform band-pass tracking associated with the rotating component to detect the anomalous condition.

**8**. The system of claim **1**, wherein the data collector includes at least one delta-sigma analog-to-digital converter that is configured to increase input oversampling rates.

**9**. The system of claim **1**, wherein the industrial drilling component comprises a rotating component, the system further comprising a frequency evaluation circuit structured to detect a signal on one of the plurality of input channels at frequencies higher than a frequency at which the rotating component rotates.

**10**. The system of claim **1**, wherein the data analysis circuit is further structured to utilize a neural network model to detect the anomalous condition.

**11**. The system of claim **10**, wherein the neural network model is a probabilistic neural network that predicts a fault condition for the industrial drilling component.

**12**. The system of claim **10**, wherein the neural network model is a time delay neural network trained on data collected over time from the plurality of input channels.

**13**. The system of claim **10**, wherein the neural network model is a convolutional neural network which provides a recommended route change for the data collector based on the data collected from the plurality of input channels, and wherein the data response circuit is further structured to adjust one of the collector routes in response to the recommended route change.

**14**. A computer-implemented method for monitoring an industrial drilling environment, the method comprising:

collecting data from a plurality of input channels, wherein a subset of the plurality of input channels are communicatively coupled to sensors measuring operational parameters from an industrial drilling component;

accessing a plurality of collector routes on a data storage, and storing the collected data on the data storage, wherein the plurality of collector routes each comprise a different data collection routine;

interpreting a plurality of detection values from the collected data, each of the plurality of detection values corresponding to at least one of the plurality of input channels;

analyzing the collected data to detect an anomalous condition associated with the industrial drilling component; and

switching from a first data collection routine to a second collection routine based on the detection of the anomalous condition.

**15**. The method of claim **14**, wherein the anomalous condition is a pre-failure mode condition for the industrial drilling component, and wherein the switching increases data monitoring of the industrial drilling component.

**16**. The method of claim **14**, wherein detecting the anomalous condition comprises determining a relative phase difference between the detection values interpreted from two of the plurality of input channels.

**17**. The method of claim **14**, wherein the industrial drilling component comprises a rotating component, and wherein detecting the anomalous condition comprises performing a frequency analysis at a selected multiple of a rotational speed of the rotating component.

**18**. A monitoring apparatus for data collection in an industrial drilling environment, the apparatus comprising:

a data collector component communicatively coupled to a plurality of input channels, wherein a subset of the plurality of input channels are communicatively coupled to sensors measuring operational parameters from an industrial drilling component;

a data storage component structured to store a plurality of collector routes and collected data that correspond to the plurality of input channels, wherein the plurality of collector routes each comprise a different data collection routine;

a data acquisition component structured to interpret a plurality of detection values from the collected data, each of the plurality of detection values corresponding to at least one of the plurality of input channels;

a data analysis component structured to analyze the collected data from the plurality of input channels to detect an anomalous condition associated with one of the plurality of industrial drilling components; and

a data response circuit structured to adjust at least one of the data collection routines based on the detection of the anomalous condition.

**19**. The apparatus of claim **18**, wherein the data response circuit is further structured to adjust the at least one of the data collection routines by changing at least one of: the collected data such that different sensors are utilized to monitor the industrial drilling component; and sensor configuration values such that operational parameters of the sensors monitoring the industrial drilling component are changed.

**20**. The apparatus of claim **18**, wherein the anomalous condition comprises a reduced operating capability of the industrial drilling component, and wherein the data response circuit is further structured to provide a drilling process adjustment to reduce a work load of the industrial drilling component.

* * * * *