(12) UK Patent Application (19) GB (11) 2 060 355 A

(21) Application No **8022178**
(22) Date of filing **7 Jul 1980**
(30) Priority data
(31) **27002**
(32) **31 Oct 1979**
(33) **Italy (IT)**
(43) Application published **7 May 1981**
(51) **INT CL³**
A44C 5/24
(52) Domestic classification
A3H 1X
(56) Documents cited
GB 1555314
GB 1450322
GB 1267739
GB 1228729
GB 703494
GB 234990
(58) Field of search
A3H
H1B
H1X
(71) Applicants
Lascor S.p.A., Via Piave 96, Sesto Calende (Varese), Italy
(72) Inventor
Fernando Fontana
(74) Agents
Marks & Clerk
57-60 Lincoln's Inn Fields, London WC2A 3LS

(54) **Fastening device for bracelets**

(57) A fastening device for a bracelet 1 comprises two strips 6, 7 hinged together about a pivot 5, each bearing a small plate 2, 3, one connected to each end of the bracelet, the end of plate 2 being concave to accommodate the rounded end of plate 3 on closing the bracelet. A stud 9 which snap fits in hole 8 may also be provided. (Figure 2 to accompany the abstract)

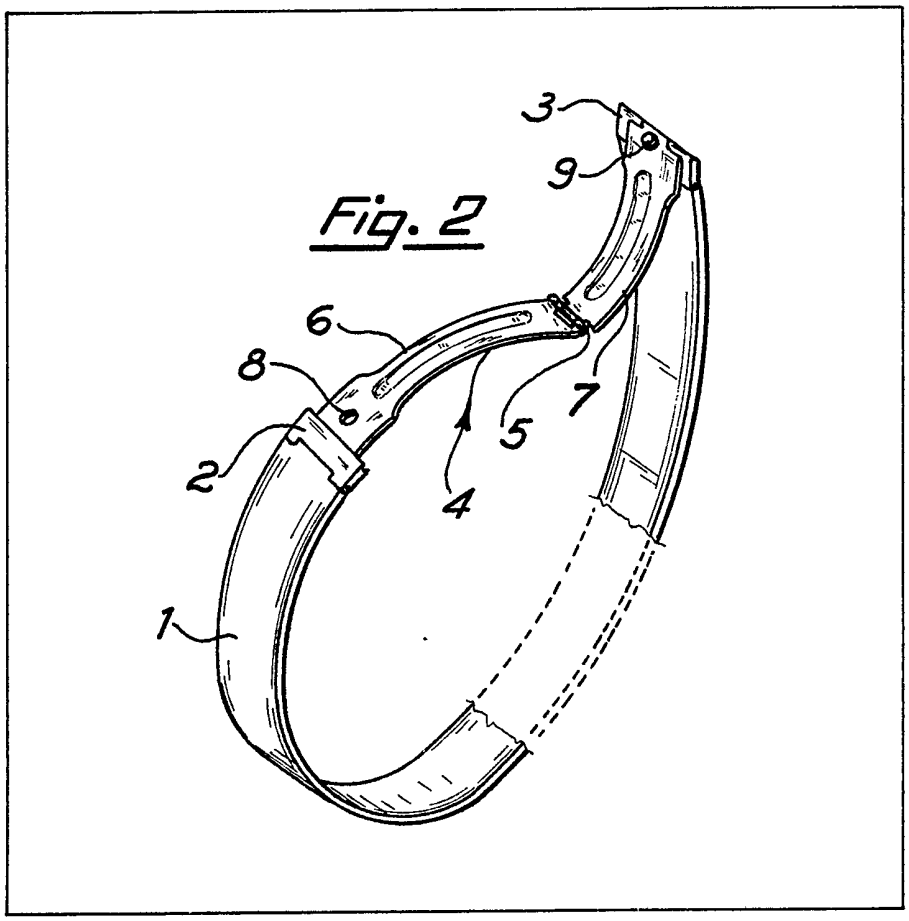

GB 2 060 355 A

2060355

Fig. 1

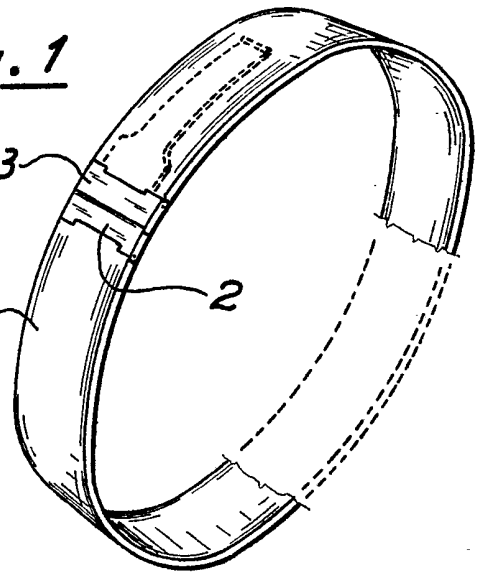

Fig. 2

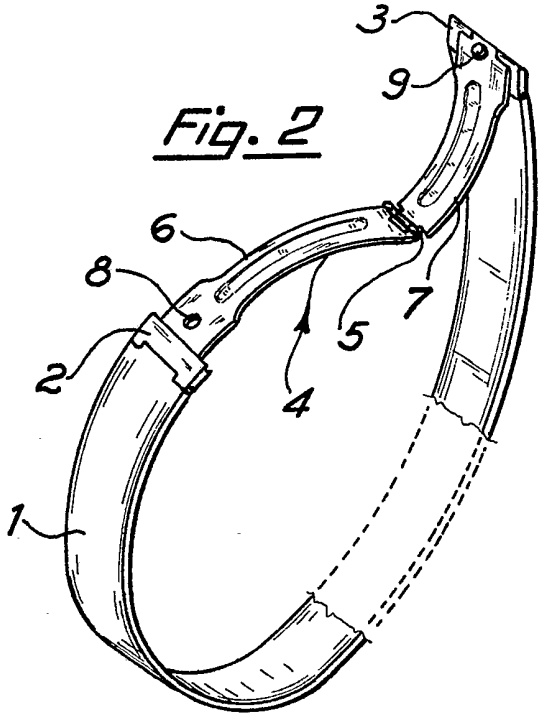

Fig. 3

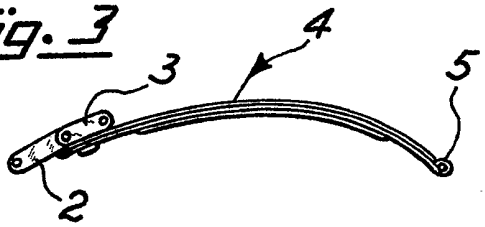

Fig. 4

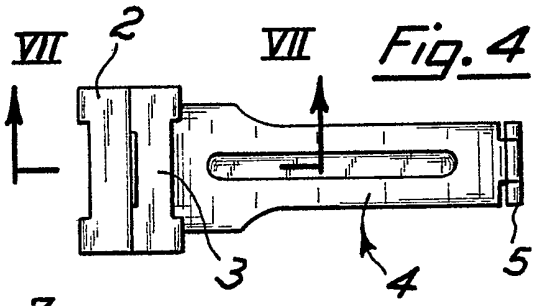

Fig. 5

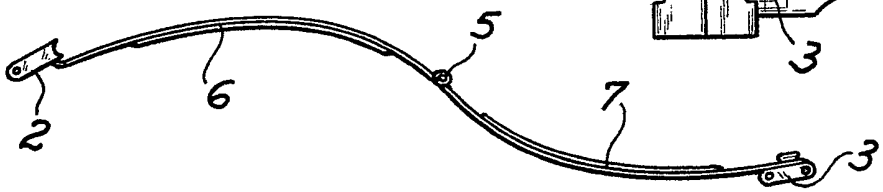

Fig. 6

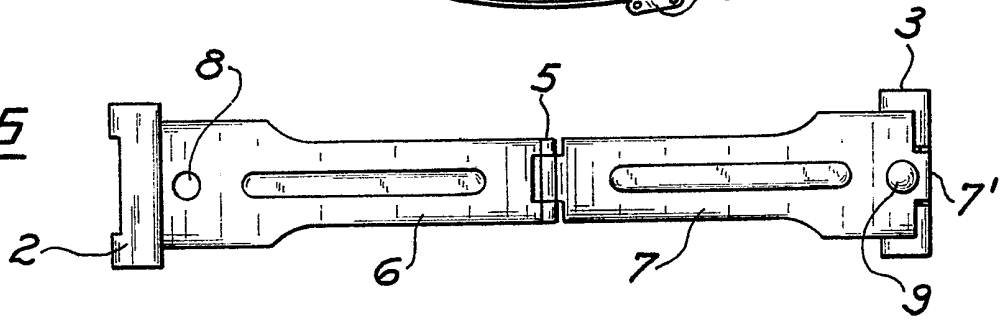

Fig. 7

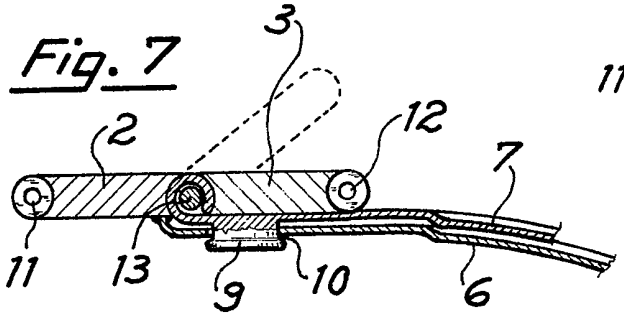

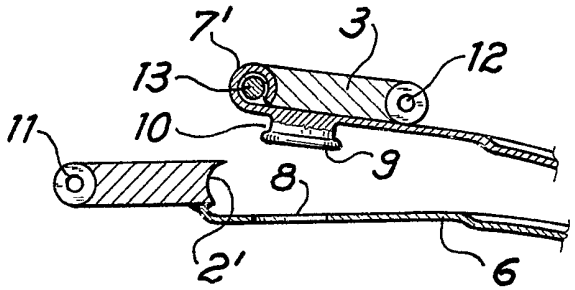

Fig. 8

SPECIFICATION

Fastening device for bracelets

This invention relates to a fastening device for a bracelet suitable for a watch, and in particular to a fastening device which, though being perfectly functional, light, compact, cheap and attractive, can be extremely small. In view of its structural features, this fastening device can conform well to the shape of the bracelet, without forming any projections or prominent parts which may be caught in clothing. Operation of the device, both in closing and opening, is made easy by the simplicity of its structure and by the reduced number of components used. The small number of necessary components also reduces the working time and labour required in assembly with an ensuing saving in material and consequent economic advantage.

This invention can therefore provide an opening and locking device for bracelets, integral with the bracelet and provided at that point of the bracelet where it closes and opens.

Thus, the present invention consists in a fastening device for a bracelet having flat and thin hooking means and which comprises two strips hinged together, each bearing a small plate, one connectable to each end of the bracelet, the plates being so designed that they can be engaged or disengaged because of their particular configuration.

The device consists of two parts: one part being fixed to one end of the bracelet and the second part to the other end thereof. The bracelet forms, when worn, a band on the arm or wrist with the two parts meeting at the point of closure, with the device ensuring a perfect locking of the bracelet.

When seen from above the device, fixed crosswise to the bracelet at the point it is to be locked, shows only two small plates joined along their long sides.

One of these two small plates forming the fastening device according to this invention is fixed in a stable manner to one end of the bracelet, with the other plate being hinged to the opposite end of the bracelet.

Between the two ends of the bracelet there can be provided in addition a known tongue-like safety clip which, when backfolded with the bracelet locked, is covered and therefore invisible.

This pair of rectangular plates comprises the whole closing and opening of the system of the bracelet, and one of the plates has a groove with a curved down bottom running along the outer edge of the plate across the bracelet. The outer edge of the other plate is provided with an arching-out insert to be received by the groove. The bracelet can be locked together by means of a closing and locking tooth passing through a hole in the safety clip and locked by the peripheral throat beneath the tooth crown.

In practice, the bracelet, when round the wrist, is fastened by folding the safety clip back, placing the plates together and then pressing them from above so that the insert enters into the groove with the tooth passing through the hole of the safety clip and being locked by the groove.

To release the bracelet it is sufficient to raise the hinged plate with a fingernail and rotate it around its pivot, thereby releasing both the plate and the tooth, whose peripheral throat can now be disengaged from the holding and locking hole.

The invention is further illustrated, by way of example, by the accompanying drawings, in which:

Fig. 1 is a perspective view of a bracelet complete with a fastening device according to this invention, fastened and locked;

Fig. 2 shows the bracelet of Fig. 1 partially opened, with the safety clip opened along its centre hinge;

Fig. 3 is a side view of the closed safety clip without the rest of the bracelet, but showing the fastening plates of the device;

Fig. 4 is a plan view of the clip shown in Fig. 3;

Fig. 5 is a side view of the clip shown in Fig. 3, but opened up;

Fig. 6 is a plan view of the clip shown in Fig. 5;

Fig. 7 is an enlarged cross-section along the line VII-VII of Fig. 4 of the closed device; and

Fig. 8 is the device shown in Fig. 7 but opened up.

At the outer side of the bracelet 1 when closed (Fig. 1) there are visible only two small plates 2 and 3 rectangular in shape and placed side by side with their long sides crosswise to the bracelet. When the bracelet is opened (Fig. 2) it is possible to see the safety clip 4 articulated around the hinge 5, and consisting of parts 6 and 7 provided at their ends with respectively a hole 8 and a tooth 9.

The functioning of the device will be best understood from the enlarged drawing Fig. 8. In fact, the bracelet itself, not shown, is fixed with its ends to the plates 2 and 3, more precisely to the side edges 11 and 12 of these plates. Plate 2, integral or fixed to the part 6, is provided with a longitudinal groove 2', while the part 6 is provided with a hole 8. Plate 3, hinged to and revolving about the pin 13 of the bent over part 7' carries on the underside a tooth 9 having a peripheral throat 10.

The fastening device is engaged by bringing together the two plates 2 and 3 so that the part 7' can enter the groove 2' while the tooth 9 with its throat 10 is positioned above the hole 8; at this point a slight pressure from above will be sufficient to push the various pieces into their respective seats.

To release the device it is sufficient to pull slightly or to push up the plate 3 making it rotate around the pin 13 so that it is allowed to become disengaged from the groove 2' and release at the same time the locking tooth 9. The slight elasticity of the pieces 6 and 7 is sufficient to spring the opening and closing clips.

CLAIMS

1. A fastening device for a bracelet having flat and thin hooking means and which comprises two strips hinged together, each bearing a small plate, one connectable to each end of the bracelet, the plates being so designed that they can be engaged or disengaged because of their particular configuration.

2. A device according to claim 1, in which the two strips form an articulated tongue-like safety clip.

3. A device according to claim 1 or 2, in which the lower hinged strip carries a fixed plate and the upper

strip carries a revolving plate which is liftable and longitudinally pivoted.

4. A device according to claim 3, in which the fixed plate is provided at its outer edge with a longitudinal groove with curved down bottom.

5. A device according to claim 4, in which the liftable and revolving plate is provided at the edge facing the groove of the fixed plate, with a rounded off projection for insertion into the groove and for retention by the same when locking the bracelet.

6. A device according to any one of claims 1 to 5, in which the lower strip is provided with a hole and the upper strip with a locking tooth which can be securely anchored in the hole.

7. A device according to claim 6, in which the locking tooth acting at the moment of closing the bracelet, is provided with a peripheral throat allowing proper positioning and locking of the fastening elements.

8. A device according to any one of claims 1 to 7, in which the hinged strips act as an elastic spring-like element allowing snap-like passing from one position to another and in particular to the locking position.

9. A device according to claim 1, substantially as herein described with reference to any one of the accompanying drawings.

10. An ultraflat and light fastening device for the locking of bracelets which, being annular in shape, require for being put on or taken off, flat and thin hooking means of small size, a device being formed of two small rectangular plates, one at each end of the bracelet, easy to put together or take apart, together with the respective end of the bracelet, the said plates being so designed that they can be engaged or disengaged thanks to their particular configuration and thanks to other elements taking part in the said engagement or disengagement.

Printed for Her Majesty's Stationery Office by The Tweeddale Press Ltd., Berwick-upon-Tweed, 1981.
Published at the Patent Office, 25 Southampton Buildings, London, WC2A 1AY, from which copies may be obtained.