M. MARX.

HAME.

APPLICATION FILED OCT. 28, 1912.

1,068,514. Patented July 29, 1913.

Fig. 2.

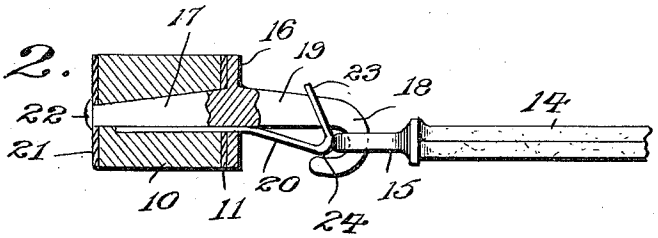

Fig. 1.

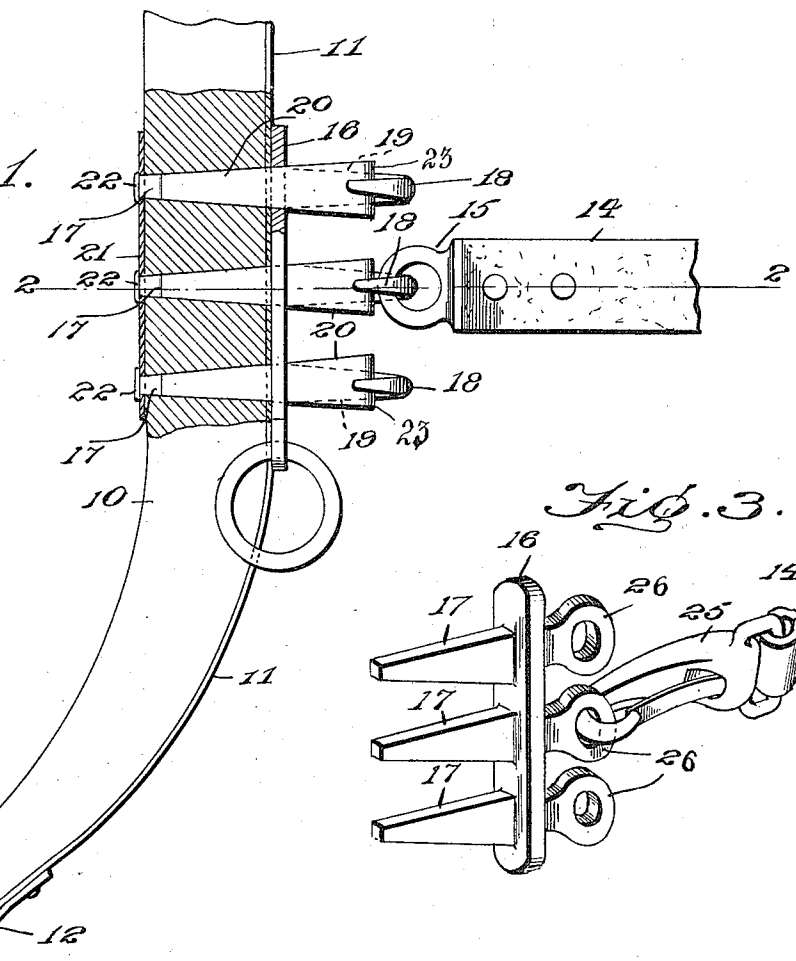

Fig. 3.

WITNESSES

W. N. Woodson

Ferdinand Ezey

INVENTOR

M. Marx.

H. A. Macey, Attorneys.

COLUMBIA PLANOGRAPH CO., WASHINGTON, D. C.

UNITED STATES PATENT OFFICE.

MATHIAS MARX, OF NEILLSVILLE, WISCONSIN.

HAME.

1,068,514. Specification of Letters Patent. Patented July 29, 1913.

Application filed October 28, 1912. Serial No. 728,239.

To all whom it may concern:

Be it known that I, MATHIAS MARX, citizen of the United States, residing at Neillsville, in the county of Clark and State of Wisconsin, have invented certain new and useful Improvements in Hames, of which the following is a specification.

This invention relates to improvements in the hame portions of a harness, and has for one of its objects to simplify and improve the construction and increase the efficiency and utility of devices of this character.

Another object of the invention is to provide an improved arrangement of the trace coupling portion of a hame, to simplify and strengthen the connection and likewise provide means whereby the "hitch" may be adjusted vertically to produce a high or low draft, as may be preferred, without detaching any of the parts and without removing the harness or the hames from the horse.

With these and other objects in view the invention consists in certain novel features of construction as hereinafter shown and described and then specifically pointed out in the claims.

The improved attachment will be applied to both of the hame members and are precisely alike, except that one is right-handed and the other left-handed, consequently the right-hand attachment only is shown for the purpose of illustration, and in the drawings illustrating the preferred embodiment of the invention.

Figure 1 is a front elevation, partly in section, of the lower portion of the right-hand hame with the attachment applied. Fig. 2 is a section on the line 2—2 of Fig. 1. Fig. 3 is a perspective view of a modified form of the attachment.

Corresponding and like parts are referred to in the following description and indicated in all the views of the drawings by the same reference characters.

The lower portion of a right-hand conventional hame is represented at 10 with the usual metal binding plate 11 attached to the outer face and terminating in an eye or loop 12 to receive the ring 13 of the hame fastener device.

The attachment is designed to receive the forward end of the main trace, represented conventionally at 14, and provided with an eye or loop 15 whereby it may be connected to the hame coupling member.

The improved attachment comprises a plate 16 having a plurality of tapered studs 17 projecting from one side and with open hooks 18 projecting from the opposite side. The stocks 19 of the hooks 18 are formed relatively heavy and increase in area from the hook portions to the plate 16 to insure the requisite strength or stiffness when the pull strains are applied.

Any required number of the studs 17 and the corresponding hooks 18 may be employed, but generally three will be used, as shown, and spaced at uniform distances apart. The upper hook will be located at the point where the highest draft is desired, while the lower hook is located at a point corresponding to the line of the lowest draft desired, while the intermediate hook is located midway between the outer hooks. By this means the line of draft may be adjusted vertically to produce a high draft, a low draft or an intermediate draft.

Each of the hooks 18 is provided with a stop spring, indicated as a whole at 20, to prevent the detachment of the eye 15 therefrom, and each of the springs is formed from a single plate of steel bent into required shape, and tapered from end to end. The plate 16 is provided with a slot at the "root" or inner terminal of each stop 19 through which the smaller end of each of the springs 20 is inserted and likewise inserted into the wood of the hame member 10 alongside of and bearing against one face of each of the studs 17. The taper of the studs 17 and of the springs 20 correspond so that when the studs and springs are forced into the aperture in the hame they will closely engage in the wood of the hame and be held firmly in position. The members 17—20 will likewise pass through apertures in the strap 11, as shown.

Bearing against the inner face of the hame opposite to the plate 16 is a bearing plate 21 through which the inner ends of the studs 17 extend and in which they are riveted, as shown at 22. By this means the plates 16—21 and the hame member 10 are firmly united and held rigidly from displacement under the severe strains to which they will be subjected when in use. At their outer ends the springs 20 are bent at right angles to the body and forked and pass by the forked portion upon opposite sides of the stock 19 of the hook, as represented at 23. At the bend of the spring the metal is thickened slightly, as shown at 24, to increase the

strength of the spring and to likewise increase its resistance force against displacement while in use.

In Fig. 4 is shown a modified arrangement consisting in displacing the hooks 19 by eyes 26 and dispensing with the use of the springs 20. When this modification is employed the eye 15 of the trace is displaced by a snap 25 which is attached to the trace 14. The modification shown in Fig. 4 will be employed where extra heavy draft harness is used.

The improved device is simple in construction, can be inexpensively manufactured and applied without material alteration of the hame.

Having thus described the invention, what I claim is:

1. An attachment for hames comprising a body having tapered studs on one side and trace receiving devices at the other side, resilient plates having tapered edges corresponding to the tapered studs and bearing against the body, the outer ends of said resilient members being bent laterally to form stops coacting with the trace receiving devices, said studs and the tapered portions of the resilient members being adapted to be inserted through a hame and said studs adapted to be secured in the hame.

2. An attachment for hames comprising a body having an integral tapered stud on one side and an integral hook at the other side, said body having a slot next to the stud and the shank of the hook, a resilient plate having tapered edges and extending through said slot and projecting into the throat of the hook.

3. The combination with a hame member of a body bearing upon one side of the hame member, tapered studs extending from the inner side of the body and fitting in tapered apertures in the hame member and secured therein, trace receiving devices extending from the outer side of the body, resilient members tapered to correspond to the taper of the studs and bearing against the same, each of said resilient members extending through an aperture in the body and bent laterally to coact with the trace engaging members.

4. An attachment for hames comprising a body having a stud extending from one side and a hook including a stock extending from the other side and with a slot through the body adjacent to the stud and shank of the hook, and a resilient plate extending through the slot and likewise extending into the throat of the hook, said stud adapted to be secured in a hame member.

In testimony whereof I affix my signature in presence of two witnesses.

MATH. MARX. [L. S.]

Witnesses:
RUDOLF BOETTCHER,
HOMER C. CLARK.

Copies of this patent may be obtained for five cents each, by addressing the "Commissioner of Patents, Washington, D. C."