United States Patent [19]

Maeyama et al.

[11] **Patent Number: Des. 314,201**

[45] **Date of Patent: ** Jan. 29, 1991**

[54] **COMBINED CAMERA AND VIDEO TAPE RECORDER .**

[75] Inventors: **Koichi Maeyama,** Kawasaki; **Kimiyoshi Ban,** Kasukabe, both of Japan

[73] Assignee: **Kabushiki Kaisha Toshiba,** Kawasaki, Japan

[**] Term: **14 Years**

[21] Appl. No.: **204,788**

[22] Filed: **Jun. 10, 1988**

[30] **Foreign Application Priority Data**

Dec. 11, 1987 [JP] Japan 62-50479

[52] **U.S. Cl.** **D16/202**

[58] **Field of Search** D16/200, 201, 202-205, D16/206, 208; 352/34, 242; 354/82, 293, 288; 358/229, 906, 909

[56] **References Cited**

U.S. PATENT DOCUMENTS

D. 223,410	4/1972	Larson	D16/202
D. 284,082	6/1986	Masatsugu et al.	D16/202
D. 291,571	8/1987	Toyoda et al.	D16/202
D. 294,570	3/1988	Kurokawa et al.	D16/202
4,885,643	12/1989	Ichimura et al.	358/906

OTHER PUBLICATIONS

Popular Photography, 12/84 p. 76 (Fujix-8 Video Camera).

Modern Photography, Nov. 1987 p. 106 (Pentax PV-C800A).

Sanyo Catalog of VEM-D1 published Aug. 1987.

Matsushita Catalog of NV-MC15 published Jan. 1, 1988.

Sony Catalog of CCD-V50 published Aug. 1986.

Primary Examiner—Melvin B. Feifer

Assistant Examiner—Adir Aronovich

Attorney, Agent, or Firm—Oblon, Spivak, McCelland, Maier & Neustadt

[57] **CLAIM**

The ornamental design for a combined camera and video tape recorder, as shown and described.

DESCRIPTION

FIG. **1** is a top, front and right side perspective view of a combined camera and video tape recorder showing our new design;

FIG. **2** is a top, rear and right side perspective view thereof, with the viewfinder in alternative position;

FIG. **3** is a front elevational view thereof;

FIG. **4** is a rear elevational view thereof;

FIG. **5** is a right side elevational view thereof;

FIG. **6** is a left side elevational view thereof;

FIG. **7** is a top plan view thereof;

FIG. **8** is a bottom plan view thereof; and

FIG. **9** is a top, rear and right side perspective view thereof, the control console and tape cassette holder being in an extended position.

The broken line showing of tape cassette is for illustrative purposes only and forms no part of the claimed design.

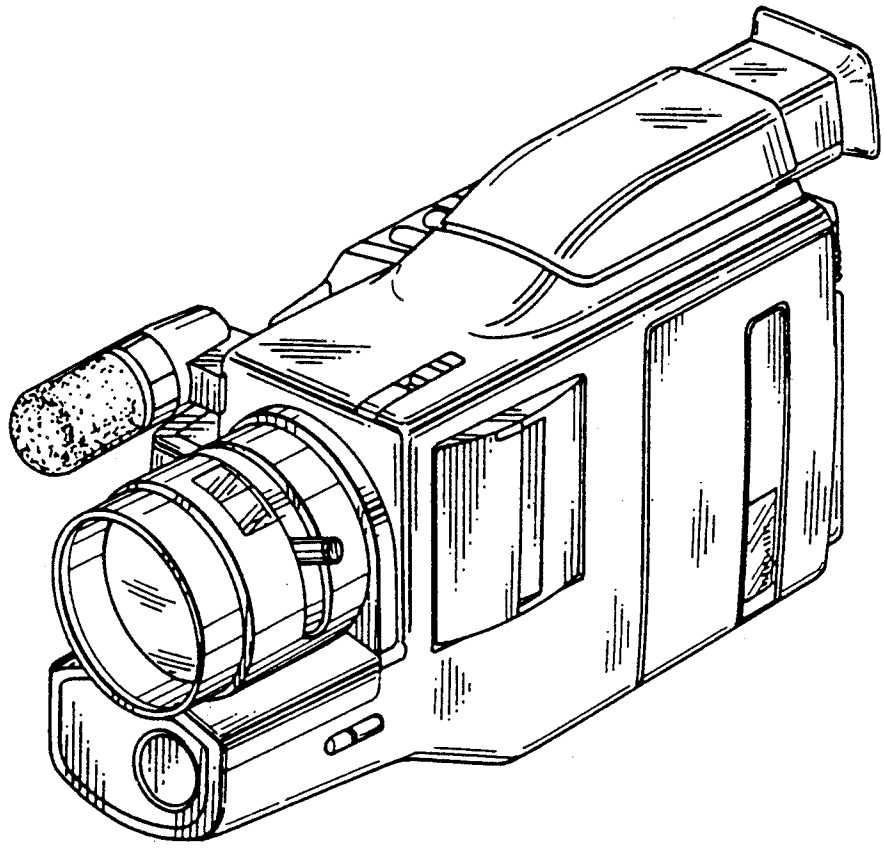

FIG. 1

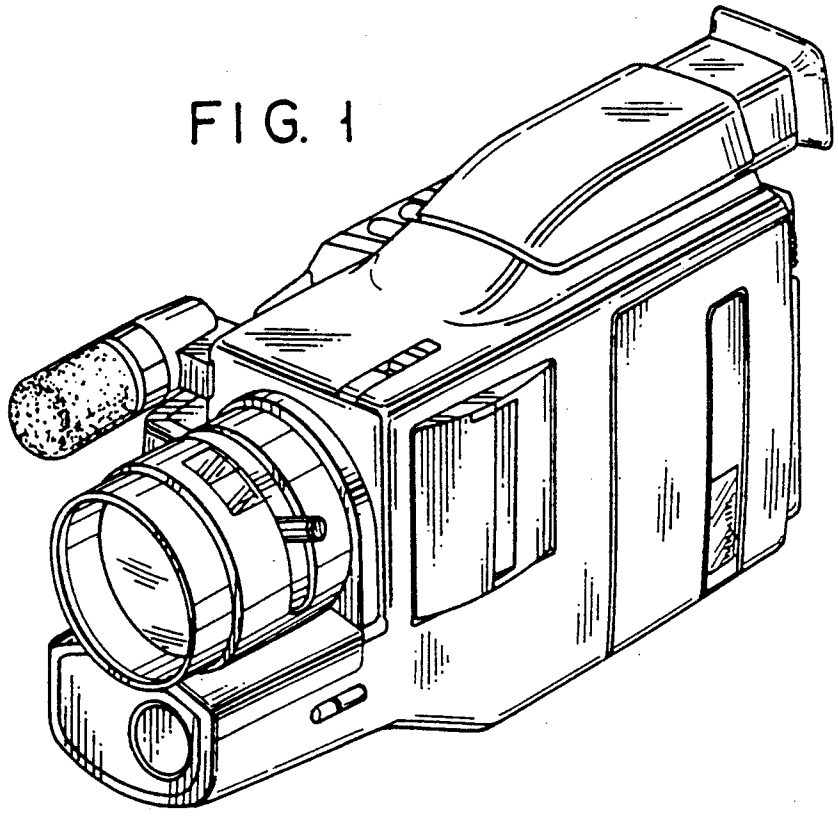

FIG. 2

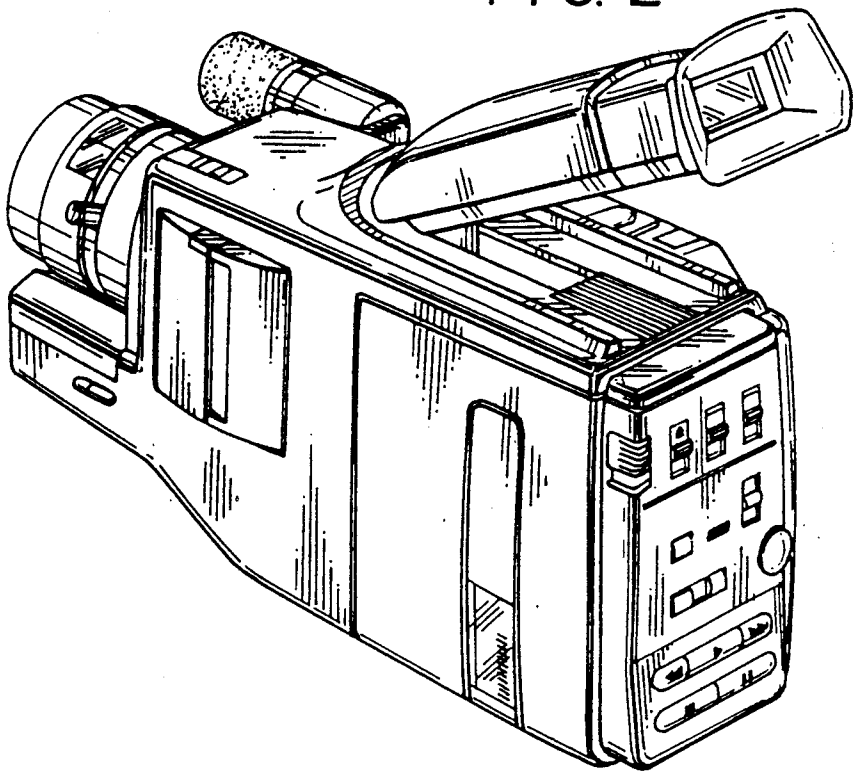

FIG. 3

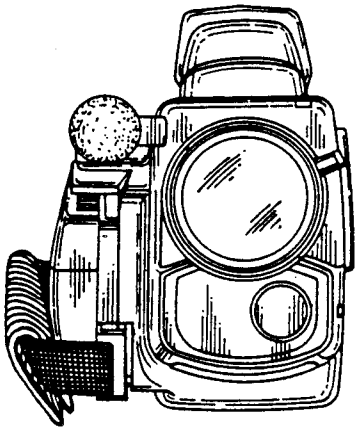

FIG. 4

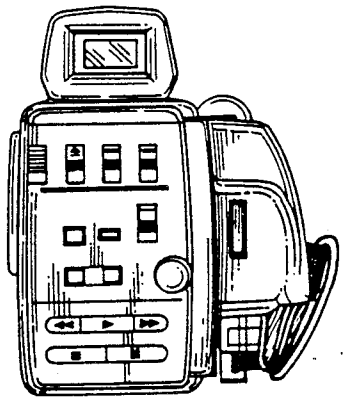

FIG. 5

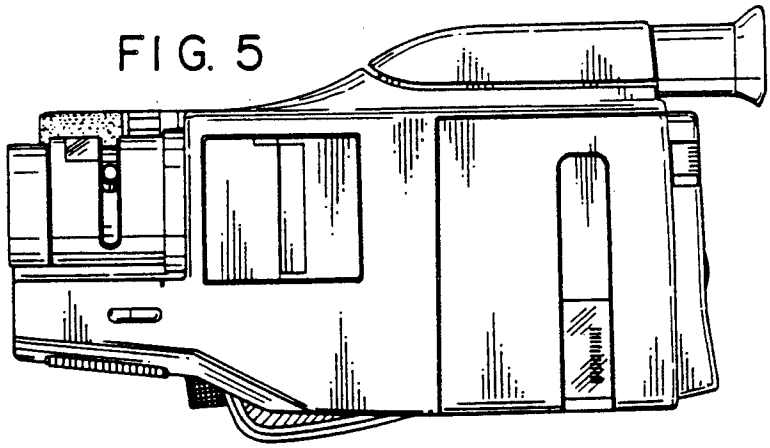

FIG. 6

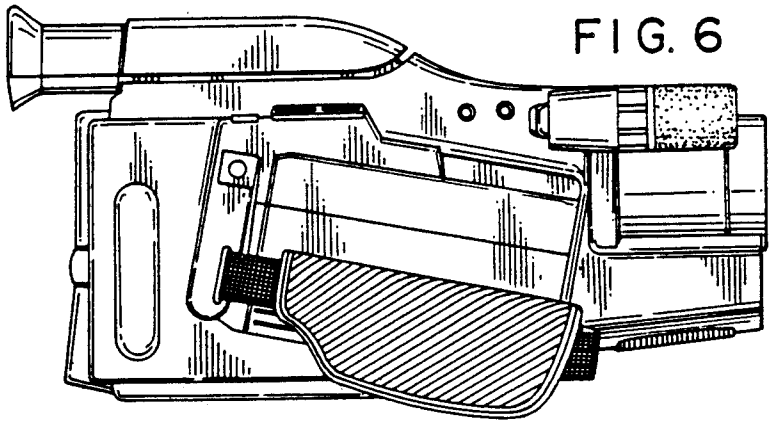

FIG. 7

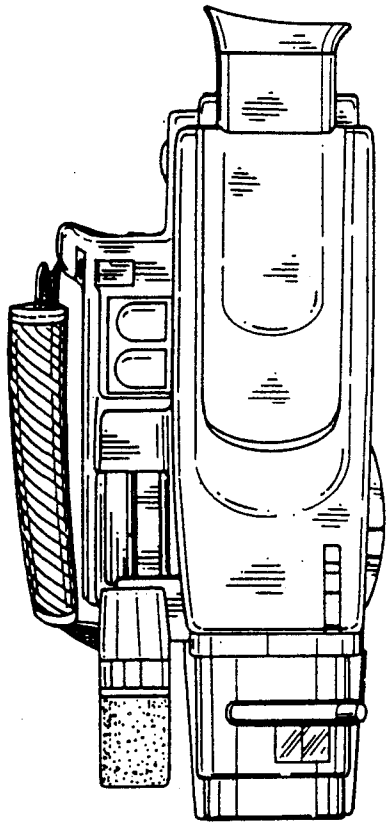

FIG. 8

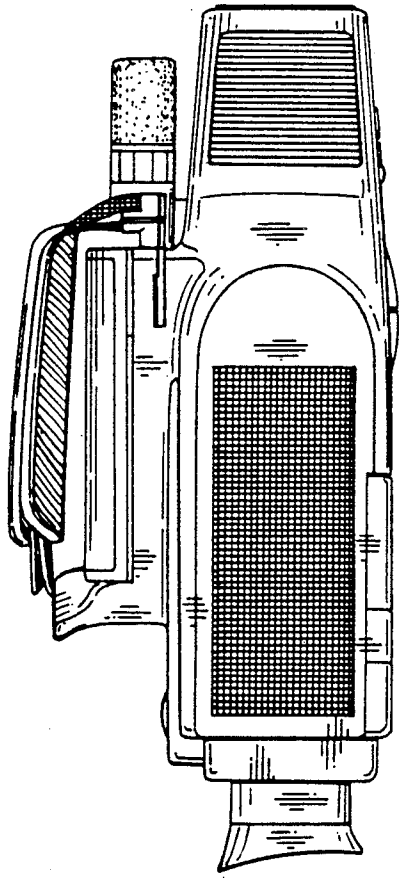

FIG. 9

