March 21, 1961 E. C. PFEFFER, JR., ET AL 2,975,428

COLLAR STAYS

Filed Sept. 24, 1957 2 Sheets-Sheet 1

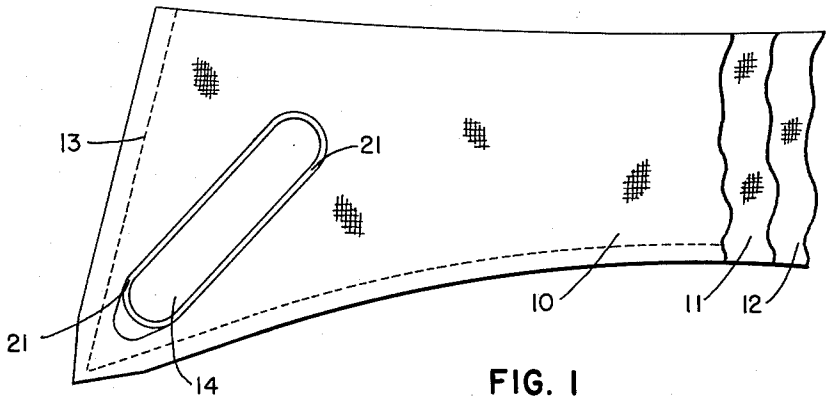

FIG. 1

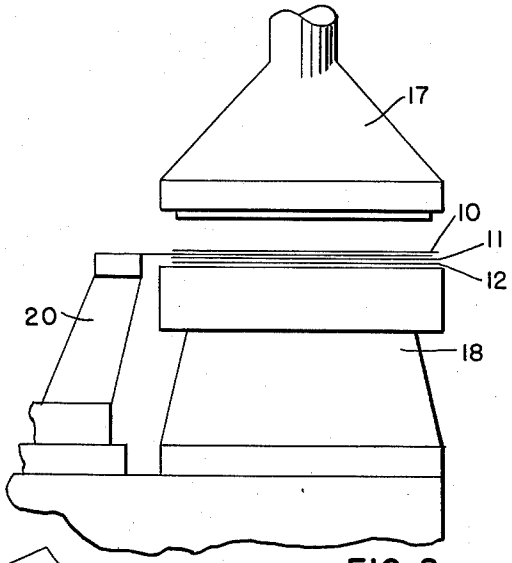

FIG. 2

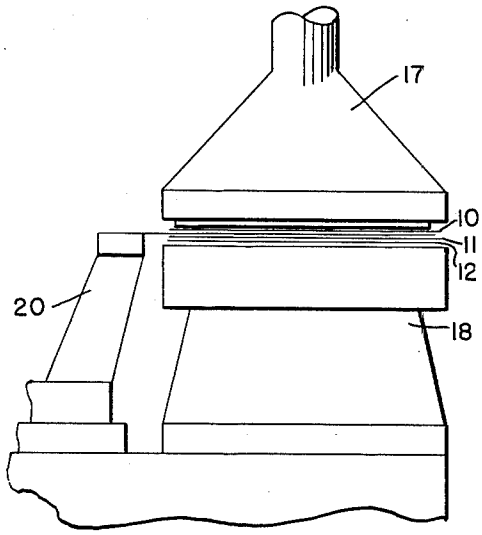

FIG. 3

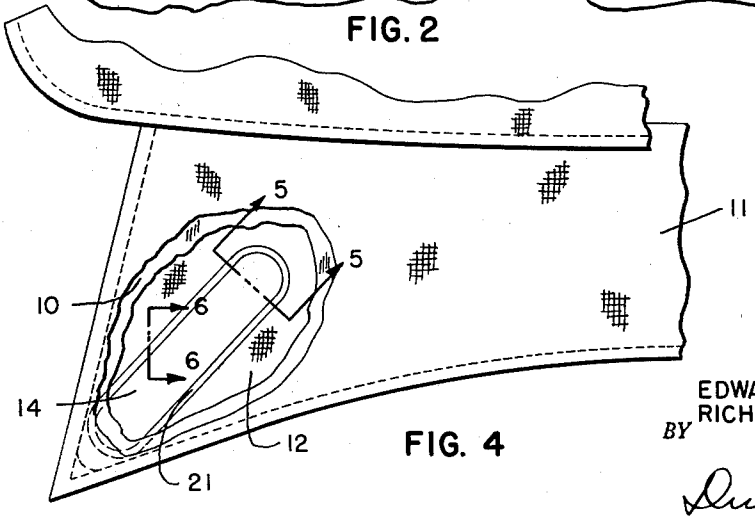

FIG. 4

INVENTOR.
EDWARD C. PFEFFER JR.
RICHARD J. MC FALLS
BY
Dudley B. Smith

March 21, 1961 E. C. PFEFFER, JR., ET AL 2,975,428

COLLAR STAYS

Filed Sept. 24, 1957 2 Sheets-Sheet 2

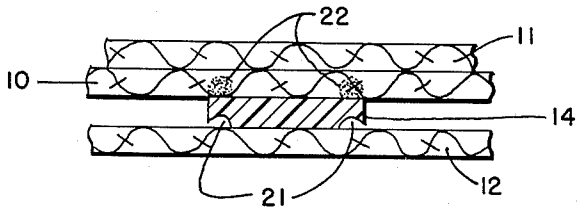

FIG. 5

FIG. 6

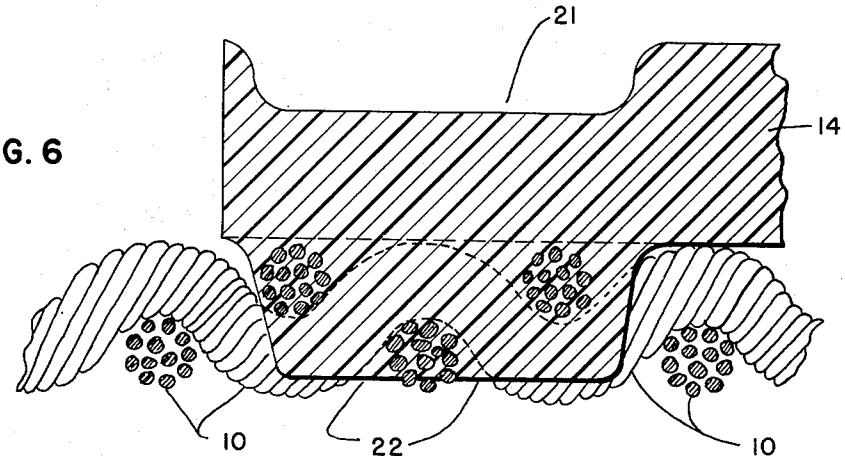

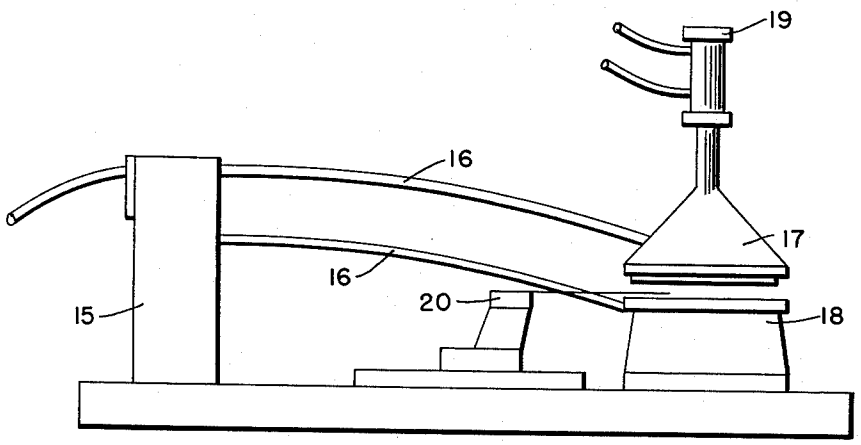

FIG. 7

INVENTOR.
EDWARD C. PFEFFER JR.
BY RICHARD J. MC FALLS

Dudley B Smith

United States Patent Office 2,975,428
Patented Mar. 21, 1961

2,975,428

COLLAR STAYS

Edward C. Pfeffer, Jr., and Richard J. McFalls, Troy, N.Y., assignors to Cluett, Peabody & Co., Inc., Troy, N.Y., a corporation of New York

Filed Sept. 24, 1957, Ser. No. 685,926

5 Claims. (Cl. 2—132)

This invention relates both to the art of permanently attaching launderable collar stays to shirt collars and to collars having such stays attached thereto.

One object of the invention is to provide a faster, less expensive, and more efficient method of attaching a stay to a collar and a better launderable stay collar. More specifically, the method includes a controlled softening of the stay while it is in contact with the collar. This allows the softened portion of the stay to flow into the adjacent portion of the collar, thereby effecting a permanent mechanical attachment of the stay to the collar. The manner in which this is accomplished is novel to the best of our knowledge.

Another object of the invention is to provide a soft shirt collar with a permanent, launderable stay, the collar being as thin as possible in the stay area.

A further object is to reduce the manufacturing cost of a soft collar with a permanent, launderable stay.

In the production of all types of apparel in commercial quantities, the primary cost factors are material and labor. Similarly, in the production of soft collar shirts with stays, the primary cost factors are the material required for the pocket for the stay and the labor cost required in stitching around the stay pocket. The instant invention all but eliminates these cost factors.

Heretofore, in manufacturing a stay type collar, it has been necessary to insert an additional patch of material adjacent each point of the collar and to provide lines of stitching both to secure the patches in place and to hold the stay within the pocket. This has been as true for our company as it has been for other shirt makers. However, the entire industry recently has been faced with increasingly competitive conditions. Thus, increasing labor and material costs have required that we turn our inventive efforts toward the provision of a less expensive and preferably a permanently attached collar stay. These efforts now have been rewarded and have resulted in the invention of what we believe to be the first permanently attached or fused biangular collar stay in the industry. It is this stay and its manner of attachment which form the subject matter of the instant invention.

Various other objects and advantages will become apparent to those skilled in the art when consideration is given to the following description of a preferred embodiment of the invention. The novel features thereinafter will be particularly pointed out in the appended claims.

In the accompanying drawings:

Fig. 1 shows a portion of the cape of the shirt collar with a permanent stay fused thereto, the collar being unturned;

Figs. 2 and 3 are related and are somewhat schematic so as to illustrate the practice of the method of the instant invention with exemplary radio frequency heater equipment, Fig. 2 showing the position of the parts with the platen of the heater open and Fig. 3 showing the same parts with the platen closed;

Fig. 4 is a portion of a finished collar partially broken

open to reveal the permanent, launderable fused stay;

Fig. 5 is an enlarged cross-section detail taken substantially along the line 5—5 of Fig. 4, showing the relationship of the stay to the various plies of a three-ply collar;

Fig. 6 is greatly enlarged and again is schematic in that it reproduces the appearance of the fused stay and the collar fabric yarns as seen in a photo-micrograph taken on a cross-section illustrated by the line 6—6 of Fig. 4; and

Fig. 7 is a schematic layout of the radio-frequency fusing equipment with which the present invention is practiced, certain portions of this equipment being represented diagrammatically.

As will become apparent as this specification progresses, certain features of the invention are so novel as to require the preliminary definition of certain words. Thus, where the coined term "fused" is used to describe a stay or the attachment of a stay to a collar in the specification and claims to follow, this term means the uniting of a dielectric stay and a fabric collar through the controlled softening of the plastic itself preferably with heat such as can be generated with a radio-frequency field, and without any adhesive or the like such as heretofore has been considered essential.

Similarly, where the term "ironable" is used with reference to permanent collar stays in the specification and claims, the term indicates those properties of a stay which render it capable of withstanding normal ironing without distortion, destruction, or sticking to the iron. The conditions of heat, pressure and the like which normally are encountered when cotton or any more delicate fabric is ironed thus do not effect an "ironable" stay. In the home, this means that the stay can withstand ironing at so called "cotton settings" on a hand iron, such settings normally being 425 degrees Fahrenheit as a maximum. In a commercial laundry, this means that the stay can withstand ironing in a commercial laundry steam press where the temperature normally does not exceed 330 degrees Fahrenheit.

In the securing of permanent stays to collars, we distinguish a "mechanical" attachment such as herein disclosed from an adhesive or chemical attachment such as heretofore may have been known. "Mechanical" attachment is a structural type of attachment. This is exemplified where the surface of one material is bonded directly to the surface of another material. For example, where the softened plastic of the stay flows through the interstices in the yarns and/or in the fabric of the collar, a "mechanical" attachment results.

For purposes of illustration, an ironable permanent stay can be made from the Du Pont polyester film identified by the trademark Mylar. This material is made from polyethylene terephthalate-polymer formed by the condensation reaction between ethylene glycol and terephthalic acid. Mylar has been selected as the material for the stay because it is ironable, tough and durable. In addition, it exhibits a high dielectric strength and a relatively low power factor. This polyester film material is currently available in a number of gauges, but we have discovered that a minimum thickness or gauge, for practical use as an effective stay, is 5 mils. We prefer 10 mils.

The invention disclosed herein is that of fusing permanent collar stays to the fabric in a soft collar by means of radio frequency equipment. Dry fusing of high softening point stay materials cannot be accomplished merely by the use of hot plates and a press because the fabric becomes scorched before the stay can be softened sufficiently to allow a fusing and a melting adherence to the fabric. A radio frequency heater, on the other hand, develops heat within the stay material

itself. This heat is uniform throughout the section between the electrodes of the radio frequency heater equipment. Thus in radio frequency electrostatic heating, the electromagnetic energy reacts upon each molecule of the stay material causing the molecules thereof to change shape. When the polarity or direction of the electromagnetic field is reversed, the stay molecules change shape with each reversal of polarity. Therefrom, a tremendous amount of heat is created by molecular friction when the field is reversed millions of times per second. This heat is utilized to soften the stay and effect the fusing of that stay to the collar.

In particular, radio frequency heating softens the stay material where it contacts the collar, thus allowing it to flow and to wet the collar fabric. The softening is accomplished in such a short period of time that the fabric itself is not scorched or otherwise damaged. This is important and essential.

In Fig. 1, we have selected a three ply collar with which to illustrate our invention although it will be apparent that the invention is just as useful with a single or a double ply collar. As shown, there is a lining ply **10**, a face ply **11**, and a back ply **12**. They appear in Fig. 1 before the collar is turned. A collar normally has this appearance after the plies have been superposed or stacked and run together by a line of stitching **13**. It is at this point in the manufacturing operation that the permanent stay **14** is preferably mechanically attached to the woven collar fabric as now will be described.

To the above end, the radio frequency equipment shown in Fig. 7 is utilized. This equipment includes a radio frequency dielectric heater **15** which is connected to a suitable power source as shown. Suitable conductors **16** lead to an upper platen **17** and a lower base platen **18**. The upper platen **17** is movable in reciprocation vertically by means of a double acting air cylinder **19** whereas the lower platen **18** is fixed as by resting the same upon a table. It will be understood that material which is placed between the platens **17** and **18** is heated in conventional manner by the radio frequency field.

A slidable pointed collar form **20** is used to position the parts of the collar and the stay between the platens during the fusing operation. In Figs. 2 and 3 this collar form is shown carrying an exemplary three ply collar. In Fig. 2, the double acting air cylinder **19** has raised the upper platen **17** thereby allowing the insertion between the platens of the protruding portion of the collar form **20** with the collar thereon. In Fig. 3, in contrast, the air cylinder **19** has caused the upper platen **17** to descend into place so as to exert a pressure of preselected magnitude between the collar parts and the stay. This causes the stay and collar to be held in intimate contact, one with the other, during the fusing operation. While the collar and stay are thus held, the stay is softened so as to cause the stay material adjacent the collar to run into the interstices and mechanically to bond or fuse the stay to the collar.

In utilizing the equipment of Figs. 2, 3 and 7 during an actual fusing operation, it will be understood that appropriate circuits with or without timing devices may be used to control the operation of the radio frequency dielectric heater. Also, associated automatic controls for the double acting air cylinder **19** may be utilized. In any event, the sequence is as follows:

First, a collar such as that shown in Fig. 1 but without the stay fused thereto is pulled over the protruding portion of the pointed collar form **20**; next, the collar form is positioned as shown in Fig. 2 between the platens **17** and **18**; the stay then is positioned biangularly on top of the interliner ply of the collar; and the double acting air cylinder **19** is actuated to cause the upper platen **17** to descend. It will be appreciated, at this point, that a preselected pressure may be utilized in the air cylinder so as to control the force holding the stay **14** and the collar fabric in intimate contact. This pressure or lack thereof is a variable, as is the softness of the stay material.

After the upper platen has descended, the position of the parts is as shown in Fig. 3 and the actual fusing then can be accomplished. It will be recalled that the stay material has a high heat loss. In practicality, this means that the stay will heat more or less easily with radio frequency dielectric heat. The instant invention utilizes this property of the stay to effect a controlled softening of at least a portion of the stay while it is in contact with the collar material for the purpose of allowing that portion of the stay to flow into the adjacent portion of the collar fabric and yarn fibers to effect a mechanical fusing or joinder of these parts.

In Fig. 1, we have shown a fused pattern in the form of a closed trough **21** which is similar to a closed path. This is but one pattern which can be effected during a fusing operation, various platen designs being capable of creating various patterns. With the parts shown as in Fig. 3, the platens are energized by causing a current to flow for a preselected time from the heater **15** through the conductor lines **16**. Thereinafter, the upper platen **17** is returned to the position shown in Fig. 2 and the collar form **20** is withdrawn from between the platens. Where but one point of the collar is fused at a time, the other point then may be fused. However, it also is practical, where desired, to fuse a stay to each point of the collar simultaneously by utilizing a double setup of that equipment shown in Fig. 2.

In summary, the method which is utilized to fuse the ironable plastic stay **14** to the collar fabric, is one in which the stay and collar fabric are placed in intimate contact with one another and a preselected pressure is exerted in a direction to force the two together into intimate contact. Then, while said contact is maintained, at least a portion of the stay is softened by radio frequency heat and maintained in such a softened condition while the stay material wets, is fused, or is wicked into the collar fabric. Expressed differently, there is a controlled softening of the stay where it is in contact with the collar. This softening allows the stay material to flow into the interstices between the various yarns and between the fibers which make up the yarns of the woven collar fabric. Thereinafter, when the stay material cools and solidifies, a discontinuous geometric pattern is visible through the face of the fabric opposite to the stay. The stay material does not necessarily penetrate clear through the fabric, however.

The cross-sections identified in Fig. 4 are enlarged to illustrate the mechanics and appearance of the actual joinder of the stay to the collar. Thus, in Fig. 5, the fused portion **21** is that portion of the stay which was against the upper platen **17** in Fig. 3. The numeral **22** identifies that portion of the stay material which has been softened and with a wick-like action was drawn and/or forced into the interstices of the collar fabric. Similar numerals in Fig. 6 illustrate the same point but additionally reveal that the stay material itself does not project entirely through the collar fabric if a controlled and preselected power and time sequence is utilized. A complete projection usually is not desired since it will tend to make the stay undesirably visible through the fabric plies of a finished collar. This would be a definite disadvantage in a single ply collar and thus normally is avoided.

In practicing the instant invention commercially, we have found several important features and limitations which must be considered. Thus, the normal "cotton setting" on a hand iron used by a housewife does not exceed 425 degrees Fahrenheit as a maximum. Above this temperature, cotton is likely to scorch or otherwise be damaged. It will be recognized, in this connection, that the more conventional soft shirt collar is made from cotton broadcloth fabric and therefore the largest field for the practice of the instant invention, is in connection

with such cotton broadcloth collar fabric. It is for this reason, that a stay material such as Mylar, having a melting temperature of approximately 480 degrees Fahrenheit, has been selected. Such a stay can be laundered and ironed without damage thereto as heretofore set forth. In this connection, the temperature 425 degrees Fahrenheit is critical.

Simultaneously, the Mylar is a dielectric material having a fairly high dielectric constant and a fairly low power factor. It will be recognized that the loss is the product of the power factor and the dielectric constant. Materials with a high loss will heat easily with radio frequency and this is the property which we utilize to soften the Mylar permanent stay in the instant invention. Were other methods of softening the stay utilized, it might simultaneously scorch or otherwise damage the conventional cotton broadcloth fabric. We thus believe that radio frequency equipment may be critical.

An exemplary radio frequency dielectric heater which we have used has 150 megacycles output, 4.2 kva. input, and a concentration of the fusing points on the upper platen in the path shown by the trough **21** in Fig. 1. This concentration of the fusing points allows the utilization of less input for the radio frequency dielectric heater and thus the use of a less expensive apparatus.

In our experimentation, we have discovered that an output of 100 megacycles or larger is required to soften Mylar in a short time interval in accordance with the instant invention. We have also discovered that the stay material itself must be launderable and ironable and should have a high modulous of elasticity, and a high melting point so that it will not melt when the shirt collar later is ironed by a housewife. The material of the stay also should be without plastic creep or tendency to assume a curve once ironing forces have been relaxed. Additionally, the material of the stay should be capable of wetting cotton fabric when the stay material is softened. The stay must have a melting point which exceeds about 425 degrees Fahrenheit so that it will not stick to the iron or melt when utilized with cotton broadcloth material. A good permanent stay also is resistant to or impervious to the effect of bleaches, laundry soaps, high chlorine content water, water softeners, and the like, so as to be completely launderable.

We have found that the Du Pont polyester film material identified by the trademark Mylar meets the above requirements and additionally is preferable only for the stay material because it has a relatively sharp melting point. That is to say, it will flow within a precise predetermined temperature range. This allows the utilization of a preselected and exact radio frequency heating, all as above described. We have, however, fused nylon stays to collars with reasonably satisfactory results.

It will be understood that various changes in the details of the invention which has been described and illustrated above may be made by those skilled in the art within the pinciple and scope of the invention as expressed in the appended claims.

What is claimed is:

1. An article of wearing apparel, comprising at least one ply of woven fabric having a scorch temperature below 425° Fahrenheit, a flat strip of thermoplastic film having a melting temperature above 425° Fahrenheit, only a portion of one face of said strip of thermoplastic film displaced into interstices of said woven fabric providing a fused attachment thereto, said displaced portion providing the sole attachment of said film to said fabric.

2. A collar for wearing apparel, comprising at least two cotton fabric plies, a flat strip of thermoplastic film material having a melting temperature above 425° Fahrenheit, only a portion of one face of said flat strip of thermoplastic film being displaced into the interstices of one of said plies only and providing a fused attachment thereto, said fused attachment being the sole attachment of said film to said collar.

3. An article of wearing apparel, comprising a ply of woven fabric having a scorch temperature below 425 degrees Fahrenheit, a flat strip of thermoplastic film of approximately ten mils thickness and having a melting temperature above 425 degrees Fahrenheit, a portion of one face of said film displaced into the interstices of said fabric to provide a fused attachment thereto, a second portion of said one face being free of attachment to said fabric.

4. A collar for wearing apparel, comprising at least two cotton fabric plies terminating in free wing portions, a strip of thermoplastic film having a melting temperature above 425 degrees Fahrenheit, spaced portions of one face of said film displaced into the interstices of one of said fabrics plies in said free wing portions to provide a fuse attachment thereto, the intermediate portions of said face being free.

5. A collar for wearing apparel, comprising at least two plies of fabric having a scorch temperature below 425 degrees Fahrenheit, said collar terminating in free wing portions, a flat strip of thermoplastic film of approximately ten mils thickness and having a melting temperature above 425 degrees Fahrenheit, spaced portions of one face of said film displaced into the interstices of one of said fabrics plies in said free wing portions to provide a fuse attachment thereto, intermediate portions of said one face being free and said displaced portions providing the sole attachment of said film to said fabrics.

References Cited in the file of this patent

UNITED STATES PATENTS

2,434,330	Merz et al.	Jan. 13, 1948
2,595,133	Golden	Apr. 29, 1952
2,631,223	Hart	Mar. 10, 1953
2,684,319	Arnold	July 20, 1954
2,701,880	Sucher	Feb. 15, 1955
2,719,803	Nottebohm	Oct. 4, 1955
2,769,979	Driesbach	Nov. 13, 1956
2,849,719	Loew	Sept. 2, 1958

FOREIGN PATENTS

72,108	Norway	May 19, 1947