(No Model.) 4 Sheets—Sheet 1.

J. T. ROBERTSON.

FEEDER ATTACHMENT FOR PRINTING PRESSES.

No. 590,114. Patented Sept. 14, 1897.

Fig. 1.

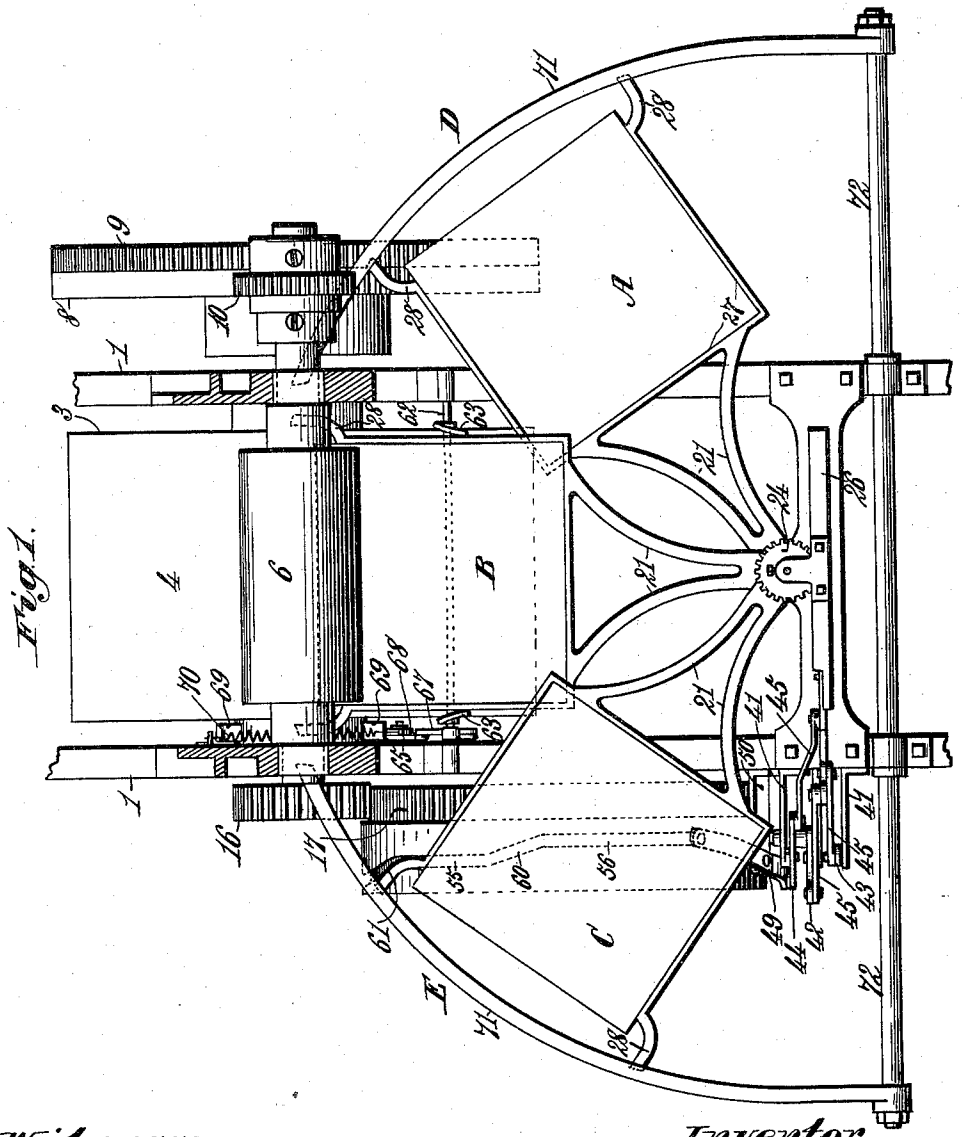

Witnesses.
R. M. Jones
C. Linsford

Inventor.
Judah Touro Robertson
by Franck D. Johns
Attorney

THE NORRIS PETERS CO., PHOTO-LITHO., WASHINGTON, D. C

(No Model.) 4 Sheets—Sheet 2.

J. T. ROBERTSON.

FEEDER ATTACHMENT FOR PRINTING PRESSES.

No. 590,114. Patented Sept. 14, 1897.

Fig. 2.

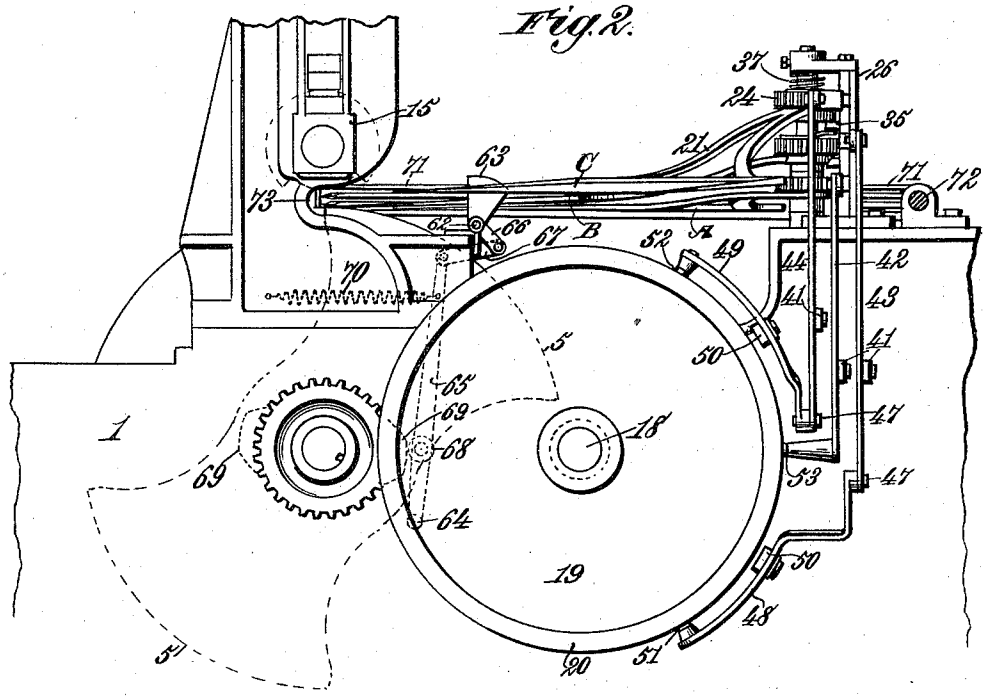

Fig. 3.

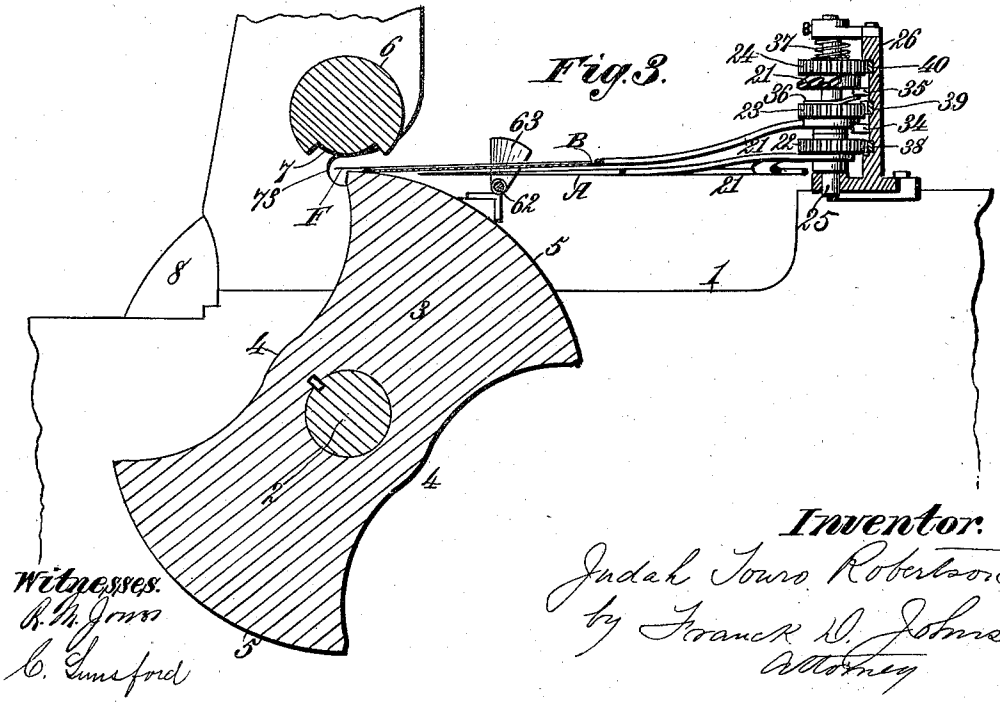

Witnesses.
R. H. Jones
C. Sumsford

Inventor.
Judah Touro Robertson
by Franck D. Johns
Attorney

THE NORRIS PETERS CO., PHOTO-LITHO., WASHINGTON, D. C.

(No Model.) 4 Sheets—Sheet 3.

J. T. ROBERTSON.

FEEDER ATTACHMENT FOR PRINTING PRESSES.

No. 590,114. Patented Sept. 14, 1897.

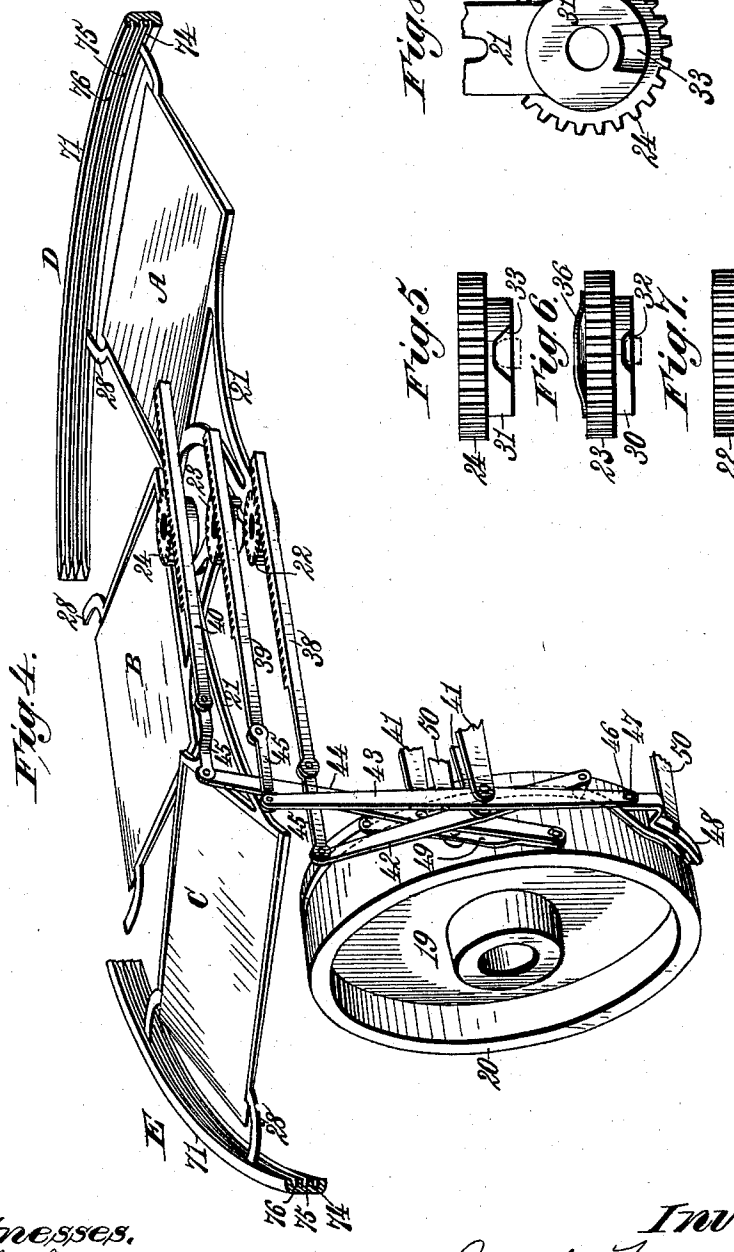

Witnesses.
A. M. Jones
C. Sinsford.

Inventor.
Judah Touro Robertson
by Franck D. Johns
Attorney

THE NORRIS PETERS CO., PHOTO-LITHO., WASHINGTON, D. C.

(No Model.) 4 Sheets—Sheet 4.

J. T. ROBERTSON.

FEEDER ATTACHMENT FOR PRINTING PRESSES.

No. 590,114. Patented Sept. 14, 1897.

Fig. 9.

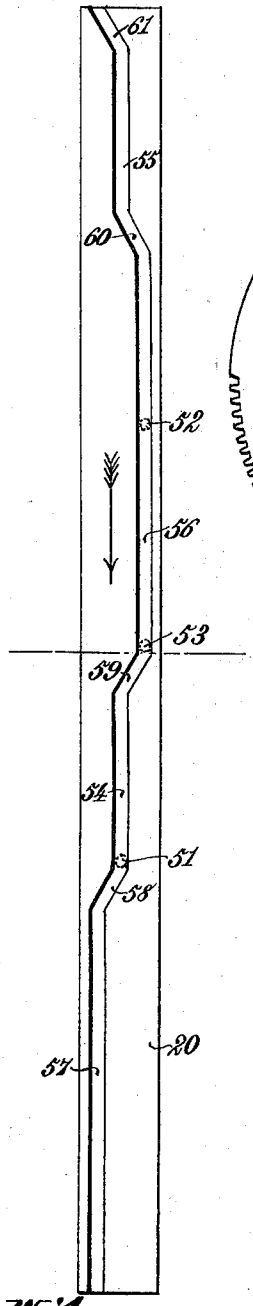

Fig. 10.

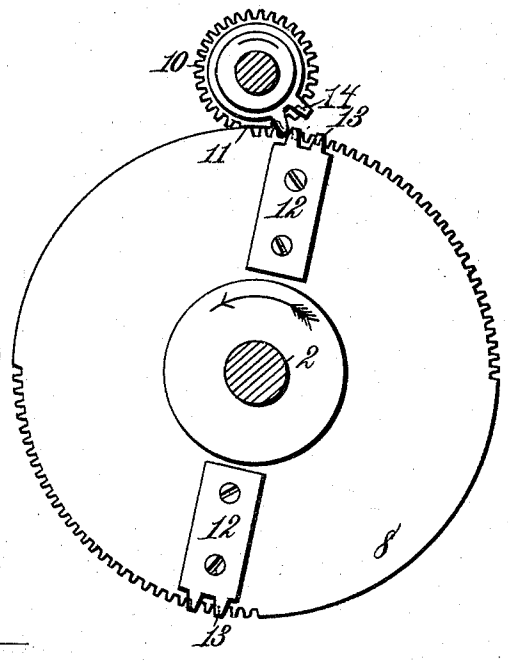

Fig. 11.

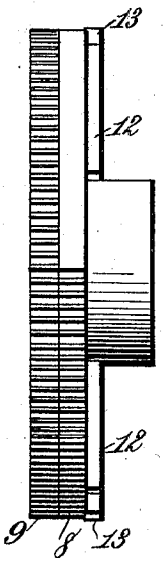

Fig. 12.

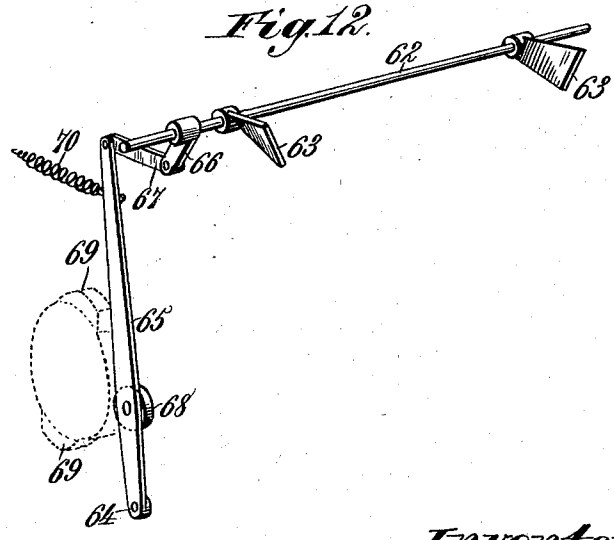

Witnesses.
R. M. Jones.
C. Sinsford.

Inventor.
Judah Toms Robertson
by Franck D. Johns
Attorney

THE NORRIS PETERS CO., PHOTO-LITHO., WASHINGTON, D. C.

UNITED STATES PATENT OFFICE.

JUDAH TOURO ROBERTSON, OF NEW YORK, N. Y.

FEEDER ATTACHMENT FOR PRINTING-PRESSES.

SPECIFICATION forming part of Letters Patent No. 590,114, dated September 14, 1897.

Application filed December 23, 1895. Serial No. 573,065. (No model.)

To all whom it may concern:

Be it known that I, JUDAH TOURO ROBERTSON, a citizen of the United States, residing at New York, in the county of New York and State of New York, have invented certain new and useful Improvements in Feeder Attachments for Printing-Presses; and I do hereby declare the following to be a full, clear, and exact description of the invention, such as will enable others skilled in the art to which it appertains to make and use the same.

My invention relates to improvements in feeders for printing-presses and analogous devices adapted to be run at a high rate of speed, and in the present instance I have shown the same as applied to a rotary-plate printing-press provided with two plates adapted, for instance, to be run at ten or more revolutions per minute, which with a two-plate press would give double the number of impressions per minute. It will be apparent to any one skilled in the art that when running at such speed it would be a physical impossibility for one or even two operators to feed such a press by the means heretofore devised for this purpose, especially in the case of work requiring careful registration—for instance, where needle-points, cross-marks, or dots, to be seen through the translucency of the paper, are to be observed, and more particularly where it is necessary to use dampened paper, with which the inaccuracies resulting from shrinkage have to be averaged between fixed register-marks.

The object of my said invention is to provide a series of feeders for a printing-press and means for successively presenting each feeder to the press to deliver the sheet carried thereby in accurate and correct register to said press.

My said invention consists, essentially, in a series of independent feeders adapted to travel transversely across the path of the delivery-line of feed to the press and means for causing one of the feeders of the series to stop a sufficient period of time in front of the press at each operation thereof to deliver the sheet carried thereby in due register to said press and at the same time to permit each feeder, when not delivering, to remain at rest in position to receive its sheet ready for delivery during the entire period consumed by the other feeders of the series in delivering their sheets successively to the press.

My said invention further consists in certain novelty in the construction, arrangement, and combination of the various parts of the same, all of which I will now proceed to point out and describe.

In the drawings I have omitted as far as practicable all the details of construction of the press—such, for instance, as parts of the frame or housing, the inking, wiping, and polishing devices, and all gearing not essential to illustrate the operation of the present invention.

Referring to said drawings, Figure 1 represents a top plan view of a portion of a rotary-plate printing-press provided with my invention; Fig. 2, a side elevation of the same; Fig. 3, a central longitudinal section, certain parts being shown in elevation; Fig. 4, a perspective of the feeder boards or frames and parts of their operative mechanism. Figs. 5, 6, 7, and 8 are enlarged details of the pinions operating the feeder boards or frames; Fig. 9, a diagrammatic view of the cam-wheel for operating the feeder-board levers; Figs. 10 and 11, details of parts of the gearing; and Fig. 12, a perspective of the locking mechanism, shown detached from the machine.

Referring to the said drawings, the reference-numeral 1 denotes the frame or housing supporting the various parts of my improved mechanism. Mounted in said frame is a shaft 2, carrying the plate-cylinder 3, the latter having two diametrically opposite cut-away portions 4, leaving two intermediate segmental surfaces 5, each adapted to receive a plate fastened thereto in any well-known manner. Mounted in the frame directly above said plate-cylinder is an impression-cylinder 6, formed of substantially D shape—that is to say, having a cut-away portion 7. The shaft of this cylinder is suitably fixed in adjustable boxes 15 in the usual manner, as shown in Fig. 2.

On one end of the plate-cylinder shaft 2 and outside the frame 1 are two gear-wheels 8 and 9, fixed together and to said shaft, the outer one 9 of which is adapted to receive motion from any suitable source of power. The inner wheel 8 is divided on its periphery into alternate and equal segments of plain

and toothed surfaces, there being two of each kind located diametrically opposite to each other, as shown in Fig. 10. Geared with this wheel 8 is a smaller gear-wheel 10, mounted on and fixed to the end of shaft of the impression-cylinder 6. This gear-wheel has a short mutilated portion 11, for a purpose hereinafter described. The relative diameters of the gear-wheels 8 and 10 are such that one of the toothed segments of the wheel 8 will cause a substantially complete rotation of the gear 10 and through it the impression-cylinder 6. It will thus be readily understood that when the first tooth of gear 10, beginning from the mutilated portion 11, is engaged by the first tooth of one of the toothed segments of gear-wheel 8 the impression-cylinder 6 will receive one complete rotation by the time gear-wheel 8 has been revolved through the arc covered by one of its toothed segments, but that when this movement is completed the mutilated portion 11 will come opposite to the succeeding plain segment of the wheel 8, thus stopping the rotation of gear 10 and leaving space for the passage of the succeeding plain surface of wheel 8 in its further rotation. Suitable plates 12, carrying starting-teeth 13, are attached to the inside surface of wheel 8 and are adapted to engage with similar teeth 14 on the impression-roller shaft to impart an initial movement to gear 10 sufficient to carry it past the mutilated portion 11 and cause it to engage its teeth with those of the wheel 8.

From the above description it will be readily understood that the impression-roller receives two complete rotations and two complete stoppages within a length of time equal to that taken for one rotation of gear-wheel 8 and the plate-cylinder 3. Now by reason of the fact that the mutilated portion 11 of gear-weeel 10 and the cut-away portion 7 of the impression-cylinder are on the same side of their shaft and that the cut-away portions 4 of the plate-cylinder and the plain surfaces of the gear-wheel 8 correspond in position, as do the segmental surfaces 5, with the toothed portions of said gear-wheel 8 that the impression-cylinder 6 will begin its rotation as the front end of each of the segmental surfaces 5 comes in position beneath it and will continue this rotation until the end of the segmental surface 5 is reached, when said rotation will stop until the other segmental surface 5 comes into position beneath said impression-cylinder 6.

Fixed to the plate-cylinder shaft 2 on the end opposite to the gear-wheels 8 and 9 and also outside the frame is a small gear-wheel 16, which is meshed with a larger gear-wheel 17, mounted on a suitable stud-shaft 18, having its bearing in the main frame 1 of the machine. Also fixed to this stud-shaft 18, preferably outside the gear-wheel 17, is a wheel 19, having a wide periphery 20, in which is a continuous cam-groove hereinafter described in detail. The relative size of the gear-wheels 16 and 17 is such that gear-wheel 17 will receive one rotation for three rotations of gear-wheel 16.

Referring now to the feeding mechanism for the press, I have shown the same in this instance as consisting of three feeder-boards A, B, and C, mounted one above another and carried by suitable arms 21, which in turn are fixed to pinions 22, 23, and 24, pivoted on a vertical shaft 25, that is mounted in a frame 26, arranged transversely to the main frame of the machine, said shaft being located directly opposite to the center of the plate and impression cylinders. These feeder-boards consist each of a base-plate brought to a feather-edge at its front and having side and rear strengthening-braces 27 and provided with two claws 28, fixed to the side braces and curved and projecting somewhat in front of the base-plate, as shown. The function of these claws will be hereinafter set forth.

The pinions 22, 23, and 24, carrying the feeder-boards, are provided on their under surfaces with hubs 29, 30, and 31, the hubs 30 and 31 being provided with cam-recesses 32 and 33, located diametrically opposite to the points of attachment of the arms 21, connecting the feeder-boards to said pinions. It will be observed by reference to Figs. 5 and 6 that the cam-recess 33 is somewhat deeper than cam-recess 32. Fixed in the transverse frame 26 are two horizontal pins 34 and 35, upon which the hubs 30 and 31 rest, respectively. A leaf-spring 36, interposed between the top of pinion 23 and the pin 35, serves to exert a constant downward pressure on the said pinion, while a coil-spring 37 performs a similar function for pinion 24, as will be readily understood.

By referring to Figs. 3 and 4 it will be seen that by reason of the fact that the cam-recesses 32 and 33 are diametrically opposite to the points of attachment of the arms 21 to the pinions each cam-recess will engage with its respective pin when the feeder-board carried by its arm is opposite to the pin—that is to say, in position to feed to the plate and impression cylinders. For instance, in Figs. 2, 3, and 4 the feeder-board B is in position to deliver and the cam-recess 32 of pinion 23, carrying said feeder-board, is engaged by the pin 32, thus permitting the pinion 23 and its feeder-board B to drop bodily a distance equal to the depth of said cam-recess 32. The object of this construction is to provide that each feeder-board shall be on a plane with the lowermost feeder-board A when in position to deliver, it being understood that said lower feeder-board A is always in a proper plane to deliver. The cam-recess 33 in the upper pinion 24 is made sufficiently deeper than cam-recess 32 in pinion 23 to compensate for the increased distance necessary for the feeder-board C to drop.

Located in the inner side of the transverse frame 26 are a series of three horizontal ways

adapted to support therein the horizontal racks 38, 39, and 40, having their teeth meshing, respectively, with the pinions 22, 23, and 24. Pivoted intermediate their lengths in suitable brackets 41, attached to the main frame 1 and on the same side thereof as the cam-wheel 19, are three levers 42, 43, and 44. The upper ends of these levers are connected by means of intermediate links 45 to the ends of the racks, lever 42 being connected to rack 38, lever 43 to rack 39, and lever 44 to rack 40. The lower ends of the levers 43 and 44 are provided with elongated slots 46, in which are located pins 47 to engage said levers with the levers 48 and 49, pivoted intermediate their lengths to suitable brackets 50, attached to the main frame 1, lever 43 being connected to lever 48 and lever 44 to lever 49. The free ends of these levers 48 and 49 are provided with stud-rollers 51 and 52, respectively, adapted to remain at all times in the continuous cam-groove in the periphery 20 of wheel 19. The lever 42 has no second lever, but is connected directly with said cam-groove by its stud-roller 53. Referring to said cam-groove, (shown in diagram in Fig. 9, in which the arrow indicates the direction of rotation,) it will be seen that the same consists of two short central straight races 54 and 55 and two long straight races 56 and 57, both of them parallel with the races 54 and 55, the race 56 lying inside and race 57 outside of said races 54 and 55. These races are connected one to the other by diagonal steps 58, 59, 60, and 61, as shown, their combined length being equal to that of one of the short races 54 55. It will be understood that the races 56 and 57 are of the same length, but are each as long as both the short races 54 and 55 and one of the diagonal steps. The relative positions of the stud-rollers are shown in said Fig. 9, they being equidistant from each other, and from the same and the above description it will be understood that two of said stud-rollers always enter and leave two of the diagonal steps at the same time. Now by inspecting Fig. 4 it will be seen that all the feeder-boards to be in position to deliver must have their stud-rollers either in race 54 or 55, which is the position occupied by feeder-board B in said figure, its stud-roller 51 being in race 54. By reason of the compound-lever construction connected with feeder-boards B and C it will be seen that for either one of these boards to be to the right of the feeder position it is necessary that its respective stud-roller 51 or 52 should move in race 57, while for them to be to the left of the feeder position their stud-rollers must move in race 56. On the contrary, feeder-board A, by reason of its having no compound lever, but merely the simple lever 42, will lie to the right of the feeder position when its stud-roller 53 is in race 56 and to the left when in race 57. Now feeder-board B being in position to deliver, feeder-board A being to the right and feeder-board C to the left, the stud-rollers will be in the position shown in Fig. 9, but as the cam-wheel 19 rotates stud-roller 52 will approach and enter diagonal step 60 and at the same time stud-roller 51 will enter diagonal step 59, while stud-roller 53 remains in race 56. The result of this is that feeder-board A, controlled by stud-roller 53, will remain at rest to the right of the feeding position, while feeder-board B, controlled by stud-roller 51, will move from its feeding position to the left, and feeder-board C, controlled by stud-roller 52, will move from its position to the left to the feeding position. The next step is that stud-roller 53 reaches diagonal step 60, thus moving feeder-board A into feeding position, while stud-roller 52, reaching diagonal step 61, moves its feeder-board C to the right of the feeding position, leaving feeder-board B at rest to the left of the feeding position, its stud-roller 51 remaining in race 56. This operation is continued indefinitely, it being apparent that each feeder-board in turn remains at rest alternately to one side and to the other until the other two feeder-boards have delivered to the plate and impression cylinders.

In order to provide that the feeder-boards A, B, and C shall register properly with the plate and impression cylinders as they successively come into position to deliver their sheets, I have provided a transverse rock-shaft 62, mounted in the main frame 1 of the machine and located just beneath the delivery position of the feeder-boards. Fixed to this rock-shaft are the two fantail locking-cams 63, as clearly seen in Fig. 12. Pivoted to the inside of the main frame 1 at 64 is a lever 65, connected to a crank 66 on shaft 62 by intermediate link 67 and carrying intermediate its length the roller 68, adapted to contact with the hub of the plate-cylinder 3. This hub has formed thereon the two diametrically opposite cams 69, rising gradually to their extreme distance from the center of the hub, continuing thus for a short distance and then dropping off abruptly. These cams are so located on the hub of the plate-cylinder that the roller 68 is adapted to be operated on thereby a little before the front edge of each of the segmental surfaces 5 of the plate-cylinder 3 passes beneath the impression-cylinder 6, as shown in Fig. 2. A retracting-spring 70 serves to retain the roller 68 against the hub of the plate-cylinder and to retract the locking-cams 63 to their lowermost position out of the path of travel of the feeder-boards. It will thus be seen that when the roller 68 is not in contact with one of the cams 69 the locking-cams 63 will be horizontal and out of the path of the feeder-boards A, B, and C, but that when one of the cams 69 contacts with roller 68 it rocks lever 65 and, through links 67 and crank 66, rocks shaft 62 until the locking-cams 63 assume a vertical position, in doing which their upper edges contact with the sides of the feeder-board and

lock said boards in position to deliver and accurately center the same. The abrupt dropping off of the cams 69 provides for the prompt dropping of the locking-cams 63 when the delivery is completed and the feeder-board is ready to move away from the feeding position. While I have shown and described this particular registering mechanism for the feeder-boards, I do not wish to be understood as limiting myself to this particular construction, as any other mechanism capable of performing the same function may be employed, if desired.

In order to provide a protection and support for the operators laying on the paper and also a guide for the front ends of the feeder-boards, I employ two supporting-segments 71, mounted at their outer ends on suitable brackets 72 and at their inner ends in the cut-away recesses 73 in the main frame near the point of contact of the plate and impression cylinders. These segments are provided on their inner surfaces with a series of three grooves 74, 75, and 76, the lower one 74 of which is adapted to receive the claws 28 of the feeder-board A, the middle one 75 the claws of feeder-board B, and the upper one 76 the claws of feeder-board C, as shown in Fig. 4. It will be observed that the inner ends of these segments terminate a sufficient distance apart to leave the claws of the feeder-board that is in position to deliver clear of the same, as is the case with feeder-board B in Fig. 4. Moreover, the position of such segments with relation to the plate and impression rollers is such that the lower groove 74, carrying the claws of feeder-board A, is on a level with the proper delivery position, so that said plate A, when leaving said groove, will be ready to deliver.

The increased height of feeder-boards B and C is compensated for by the operation of the cam-recesses 32 and 33 of the pinions 23 and 24, hereinbefore described, which permit their respective feeder-boards to drop the required distance to the proper delivery position when they leave their grooves, and which promptly raise them again to the level of their respective grooves as they leave the delivery position. It will be understood that these segments 71 are not essential to the proper operation of the device, but are employed, if desired, simply to afford a guide and support for the free ends of the feeder-boards when not delivering, and also to afford a protection for the operators laying on the paper who are stationed at D and E.

From the above description the complete operation of the mechanism will be understood to be as follows: The feeder-board B, for instance, being in position to deliver and being held in registered position by the locking-cams 63, engaging the sides thereof, as shown in Fig. 1, with the paper F to be delivered, projecting slightly beyond the feather-edge thereof, the paper will be drawn off and in between one of the segmental surfaces 5 of the plate-cylinder 3 and the impression-roller 6 as they are rotated, as hereinbefore described, the construction and relative arrangement of the various gear-wheels being such that one of said segmental surfaces 5 and the impression-roller 6 meet and engage just after each feeder-board has come to a stop and been registered in delivery position. The feeder-board remains in this position until the complete delivery of its paper, during which time the impression-roller makes substantially one complete rotation and the plate-cylinder moves the space of one of the segmental surfaces 5. Now as the rear end of the segmental surface 5 passes beneath the impression-roller 6 the latter stops, the locking-cams 63 drop down out of the path of the feeder-board B, and the latter moves to the left, while at the same time feeder-board C moves to the delivery position, feeder-board A remaining at rest to the right where the operator at D is laying thereon the paper. As feeder-board B moves to the left, it is raised by the pin 34, leaving cam-recess 32, so that the claws 28 thereof will enter their proper groove 75 in segment 71. The time consumed by the feeder-boards B and C in shifting their positions is also occupied by one of the cut-away portions 4 of the plate-cylinder 3 in passing beneath the impression-roller 6. Now as feeder-board C reaches the delivery position it drops down to the proper delivery plane through the engagement of cam-recess 33 with its pin 35 and is at the same time registered by the locking-cams 63. The paper thereon is then drawn off, as before, by the other segmental surface 5 and impression-roller 6, which again begins to rotate. In like manner the feeder-board A is next moved to the delivery position and feeder-board C to the right, feeder-board B remaining at rest to the left. Next feeder-board B moves to delivery position and feeder-board A to the left, feeder-board C remaining at rest to the right. Next C goes to delivery, B to the right, and A remains at rest to the left. Next A goes to delivery, C to the left, and B remains at rest at the right, and finally B goes to delivery and A to the right, C remaining at rest to the left. This brings the feeder-boards back to the original position shown in Fig. 1, the cam-wheel 19 having made one complete rotation, the plate-cylinder 3 three rotations, carrying a segmental plate-supporting surface 5 six times past the impression-roller, and the latter six intermittent rotations, thus corresponding in number with the number of presentations of the feeder-boards A, B, and C at delivery, each having presented themselves twice.

It will thus be seen that I may run the press at the rate of twenty or more impressions a minute and at the same time allow to the two operators laying on the paper a length of time equal to that occupied by two deliveries in which to lay on and adjust each sheet.

While I have illustrated in the present construction a series of three oscillating feeder-

boards, it will be understood that I do not limit the scope of my invention to this number, as they may be increased, if desired, by making the necessary changes in the operating mechanism; nor do I wish to be understood as limiting myself to oscillating feeder-boards, as they may be arranged to travel in a straight line transversely across the line of feed to the press, or to revolve about a common center, at the same time moving transversely across the line of feed, the gist of the invention being that there shall be independently-movable multiple feeder-boards successively presenting themselves in position to deliver to the press. It will also be apparent that this general construction may be employed in devices analogous to printing-presses—that is to say, devices in which a rapid feed is a desideratum—and I do not, therefore, limit myself to its application to printing-presses.

Having thus fully described my invention, what I claim, and desire to secure by Letters Patent, is—

1. In a feeding device, the combination of a series of independently-movable feeders adapted to be successively presented in delivery position, at the same point, substantially as shown and described.

2. In a feeding device, the combination of a series of independently-movable feeders adapted to move transversely across the path of the line of feed and to successively stop in delivery position, substantially as shown and described.

3. In a feeding device, the combination of a series of independently-movable feeders adapted to successively deliver to the same point, each feeder adapted to remain at rest in position to receive during the delivery of the other feeders, substantially as shown and described.

4. A printing-press provided with independently-movable multiple feeder-boards adapted to be successively presented in delivery position at the same point, substantially as shown and described.

5. A printing-press provided with a series of independently-movable feeders adapted to be successively presented to the press at the same point in position to deliver, substantially as shown and described.

6. A printing-press provided with a series of independently-movable feeders adapted to be successively presented to the press in position to deliver, and means for accurately registering said feeders independently when in said position to deliver, substantially as shown and described.

7. A printing-press provided with a series of independently-movable feeders adapted to move transversely across the path of the line of feed to the press and to successively stop in position to deliver to said press, substantially as shown and described.

8. In a printing-press, the combination with a printing-couple, of a series of independently-movable feeder-boards, means for successively presenting the same to substantially the delivery position, and means for positioning the same independently to the proper delivery plane, substantially as shown and described.

9. A printing-press provided with a series of independently-movable feeders adapted to move transversely across the path of the line of feed to the press and to successively stop in position to deliver to said press, and means for successively positioning said feeders to the proper delivery plane, substantially as shown and described.

10. A printing-press provided with a series of independently-movable feeders adapted to move transversely in the arc of a circle across the path of the line of feed to the press and to successively stop in position to deliver to said press, substantially as shown and described.

11. A printing-press provided with a series of independently-movable feeders adapted to move transversely in the arc of a circle across the path of the line of feed to the press and to successively stop in position to deliver to said press, and means for successively positioning said feeders to the proper delivery plane, substantially as shown and described.

12. A printing-press provided with a series of independently-movable feeders adapted to move transversely in the arc of a circle across the path of the line of feed to the press and to successively stop in position to deliver to said press, means for successively positioning said feeders to the proper delivery plane, and means for accurately registering said feeders when in position to deliver, substantially as shown and described.

13. A printing-press provided with a series of independently-movable feeder-boards adapted to vibrate transversely in the arc of a circle across the path of the line of feed to the press and to successively stop in position to deliver to said press, substantially as shown and described.

14. A printing-press provided with a series of independently-movable feeders adapted to successively deliver to said press, at the same point, each feeder adapted to remain at rest in lying on position during the delivery of the other feeders, substantially as shown and described.

15. A printing-press provided with a series of feeder-boards adapted to vibrate transversely in the arc of a circle across the path of the line of feed to the press and to successively stop in position to deliver to said press, each feeder-board adapted to alternately remain at rest on each side of the delivery position during the delivery of the other feeder-boards, substantially as shown and described.

16. In a printing-press, the combination with a printing-couple, and a series of feeder-boards adapted to vibrate transversely in the arc of a circle across the path of the line of feed to the press and to successively stop in

position to deliver to said press, of a series of racks for operating said feeder-boards, and a cam-wheel geared to the plate-cylinder and adapted to operate the racks and feeder-boards through intermediate mechanism, substantially as shown and described.

17. In a printing-press, the combination with a series of feeders adapted to successively deliver to said press, of a cam-wheel operated by the press mechanism and having differently-disposed races, and intermediate mechanism connecting the races of said cam-wheel independently with each feeder, substantially as shown and described.

18. In a printing-press, the combination with a series of feeder-boards, and mechanism for causing the same to successively deliver to the press, of claws secured to and projecting from each side of the delivery ends of said feeder-boards, and segmental supports having individual grooves for the claws of each feeder-board and adapted to receive and support the same during their travel to and from the delivery position, substantially as shown and described.

19. In a printing-press, the combination with a series of feeder-boards, and mechanism for causing the same to successively deliver to the press, of claws secured to and projecting from each side of the delivery ends of said feeder-boards, segmental supports having individual grooves for the claws of each feeder-board and adapted to receive and support the same during their travel to and from the delivery position, and means for adjusting said feeder-boards to the proper delivery plane when said feeder-boards are in the path of the line of delivery to the press, substantially as shown and described.

In testimony whereof I affix my signature in presence of two witnesses.

JUDAH TOURO ROBERTSON.

Witnesses:
H. VICTOR KEANE,
D. E. WOODHULL.