Sept. 14, 1926. 1,599,749

G. A. EMERSON

WASHING MACHINE

Filed Nov. 8, 1924

Fig. 1.

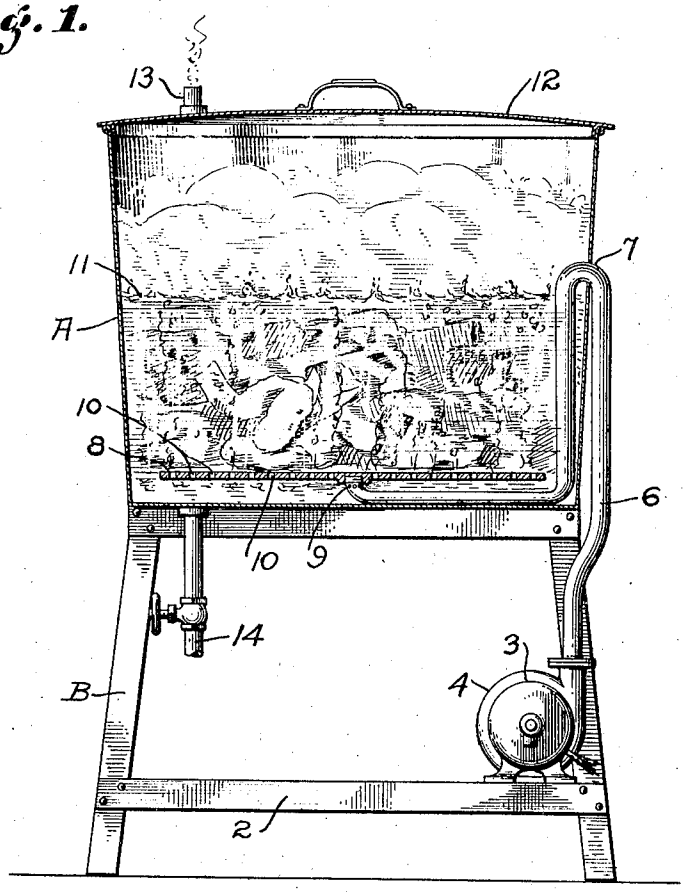

Fig. 2.

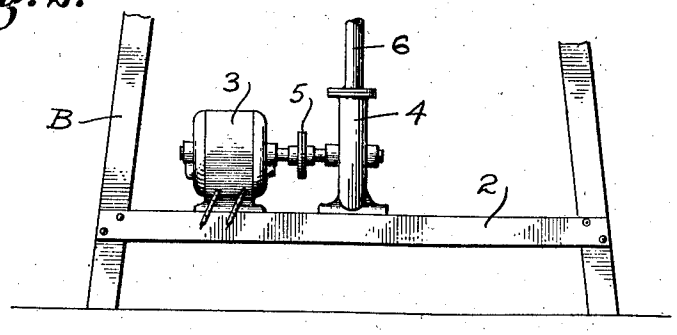

INVENTOR.
George A. Emerson.
BY
Dewey, Strong, Tunnell & Loftus
ATTORNEYS.

Patented Sept. 14, 1926. 1,599,749

UNITED STATES PATENT OFFICE.

GEORGE A. EMERSON, OF SAN FRANCISCO, CALIFORNIA.

WASHING MACHINE.

Application filed November 8, 1924. Serial No. 748,596.

This invention relates to a washing machine, and particularly to the type in which air and water are continuously circulated through the clothes or other articles to be washed.

The object of the present invention is to generally improve and simplify the construction and operation of washing machines; to provide a machine in which soap water is maintained in constant circulation by means of air, and further, to provide an exceedingly simple form of apparatus for introducing air into the bottom of the machine, and for uniformly distributing the air so that soap water, together with the air, will continuously circulate through the clothes and insure rapid and thorough removal of dirt, etc.

One form which my invention may assume is exemplified in the following description and illustrated in the accompanying drawings, in which—

Fig. 1 is a central vertical section through the washing machine.

Fig. 2 is a detail view showing the air blower and the mechanism for driving the same.

Referring to the drawings in detail, and particularly to Fig. 1, A indicates a wash tub of suitable construction, and B a base or frame supporting the same, said frame being constructed of structural iron or the like or in any other manner desired. Supported by the frame B, on cross-bars 2, are an electric motor 3 and an air blower 4, the motor being directly connected with the rotor of the blower as indicated at 5. Connected with the outlet of the blower is a pipe 6. This pipe is extended upwardly along one side of the tub and is passed through the same at a point adjacent the top thereof, as indicated at 7. It is then extended downwardly to the bottom and is run in under a circular plate 8 which acts as a false bottom within the tub. The pipe terminates under the plate and is closed by the same, but the pipe is radially perforated, as at 9, to permit the air to freely escape in all directions. The plate is perforated as at 10 to permit the air to escape upwardly through the same, and as its diameter is slightly less than the interior of the tub a small amount of air may also escape around the outer edges of the same.

In actual operation, if the machine is to be employed for the purpose of washing clothes, it is only necessary to fill the tub with hot water until the level indicated at 11 is reached. Any desired soap or washing compound is, of course, mixed with the water and it is then ready for the reception of the clothes. The clothes are placed on top of the perforated plate 8 and a cover such as shown at 12 is then applied, this cover having a vent pipe 13 through which air may escape during the operation of the machine. With the water and clothes introduced and the cover 12 applied, it is only necessary to start the electric motor. This rotates the blower 4 at a high speed and air is thus admitted and discharged through the pipe 6 and enters the bottom of the tub through the perforations 9. The air is then evenly distributed by means of the perforated plate and rises upwardly through the water and the clothing. The air rises with sufficient force to create a circulation of the water, and the water, together with the air, thus constantly rises through the fabric of the clothing; that is, the water rises through the major portion of the clothing but naturally descends around the inner periphery of the tub and as such is circulated over and over, thus insuring rapid dissolution and removal of the dirt and other objectionable matter contained in the clothing. The air will, of course, escape the moment it passes through the clothing and the water, and will constantly discharge through the vent pipe 13.

Actual experience has shown that this method of circulating water and air through the clothing permits the most delicate fabrics to be washed without danger of injuring the same, as all mechanical devices, such as rubbers or agitators, are entirely eliminated, the washing action being obtained by the mere circulation of the water and air through the fabric of the materials. The water and air are continuously circulated until the clothing is clean, when the water may be drained off through a bottom plug or pipe 14 which may be direct connected with the sewer if desired, and it is provided with a valve for controlling the flow of water therethrough. Clean water may then be inserted and the operation continued until the clothes are thoroughly rinsed, when they may be removed and passed through a wringer in the usual manner.

When it is desired to dry out the tub after the washing operation is completed, it is

only necessary to drain it and rinse it, and then to turn on the blower. This rapidly dries out the tub and thus eliminates drying it with a cloth, etc.

The entire machine is exceedingly simple as the only mechanism employed is an electric motor and a direct connected blower. Danger of flooding the blower with water is entirely eliminated by bringing the air pipe into the tub at a point above the normal water level maintained therein, and comparatively little space is lost when using the perforated distributing plate 8 as the pipe may be flattened beneath the same so as to consume as little space as possible. These features, together with other details of construction, may, however, be varied within the scope of the appended claims. I similarly wish it understood that the materials and finish of the several parts employed may be such as the experience and judgment of the manufacturer may dictate or various uses may demand.

Having thus described my invention, what I claim and desire to secure by Letters Patent is—

1. A washing machine comprising a tub, a circular perforated plate within the tub and slightly elevated with relation to the bottom of the tub, said plate having a diameter less than the diameter of the interior of the tub to form an annular passage between the interior of the tub and the plate, a pipe entering the tub at a point above the normal water level, said pipe being extended downwardly within the tub to the bottom and being extended radially beneath the perforated plate to the center thereof, and the end of the pipe being closed by said plate, said pipe having a plurality of radial perforations formed in its end underneath the center of the plate, and means for delivering air under pressure to said pipe.

2. A washing machine comprising a tub, a frame supporting the same; an air blower supported on the frame, means for driving said blower, an air pipe extending upwardly from the blower and entering the side of the tub at a point above a normal water level in the tub, said pipe being extended downwardly within the tub to the bottom and being extended radially to the center of the tub, and a perforated plate forming a closure for the end of the air pipe, said plate forming a support for clothes to be washed and also causing even distribution of air discharging from the pipe, said pipe having radial perforations formed therein.

GEORGE A. EMERSON.