J. A. PROULX.

ADVERTISING DISPLAY DEVICE.

APPLICATION FILED OCT. 29, 1913.

**1,125,393.**

Patented Jan. 19, 1915.

2 SHEETS—SHEET 1.

Fig. 1.

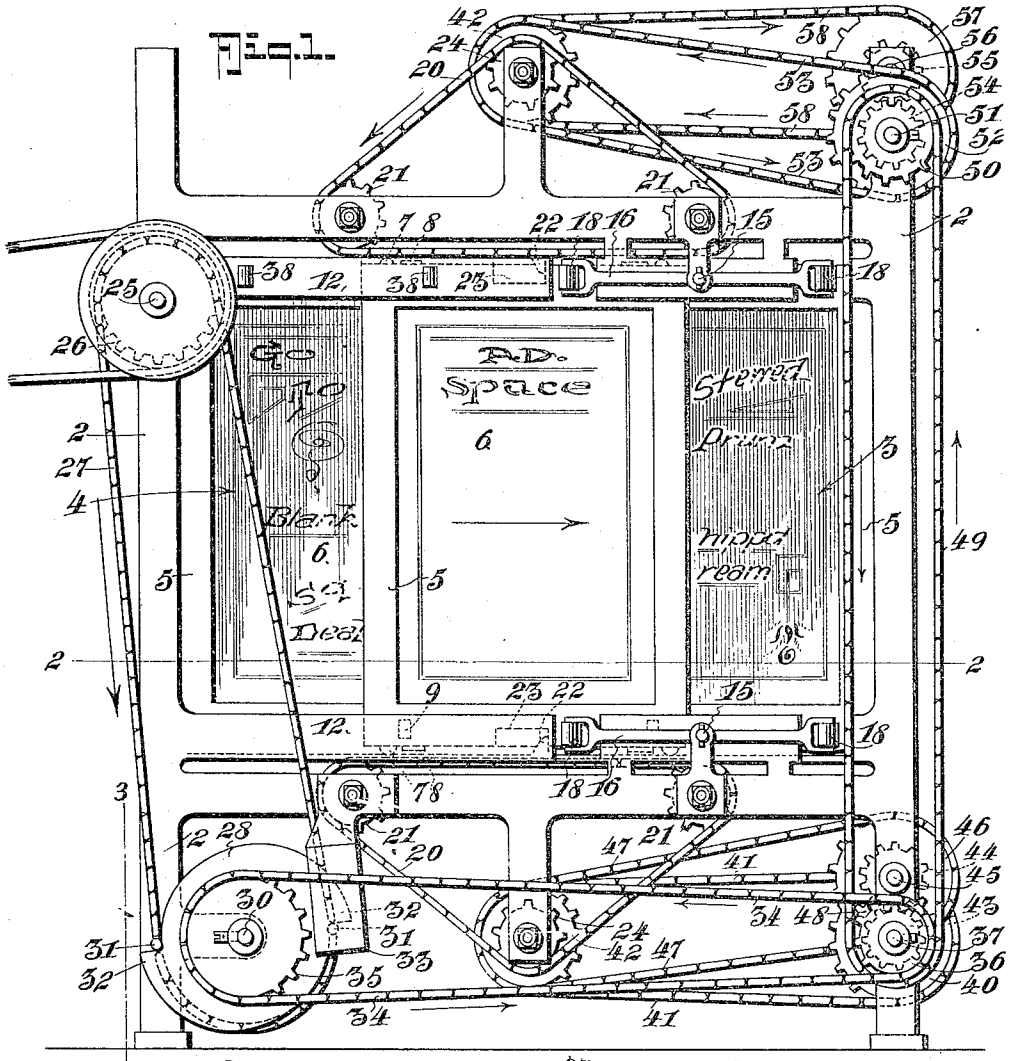


Fig. 2.

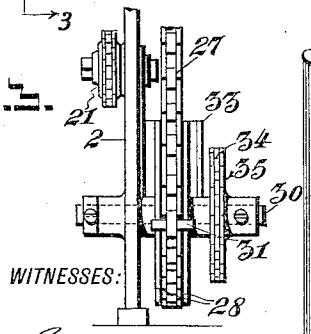

Fig. 4.

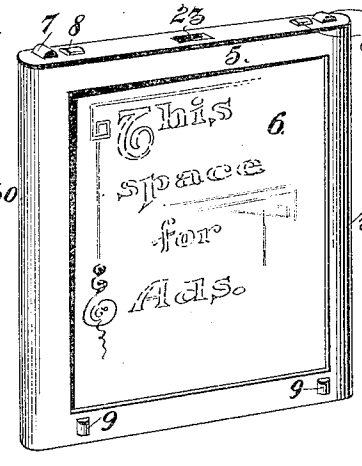

WITNESSES:

John G. Schrott

Charles Diller.

INVENTOR

J. A. Proulx.

BY

Fred G. Dieterich

ATTORNEYS.

THE MORRIS PETERS CO., PHOTO-LITHO., WASHINGTON, D. C.

J. A. PROULX.

ADVERTISING DISPLAY DEVICE.

APPLICATION FILED OCT. 29, 1913.

1,125,393.

Patented Jan. 19, 1915.

2 SHEETS—SHEET 2

Fig. 2.

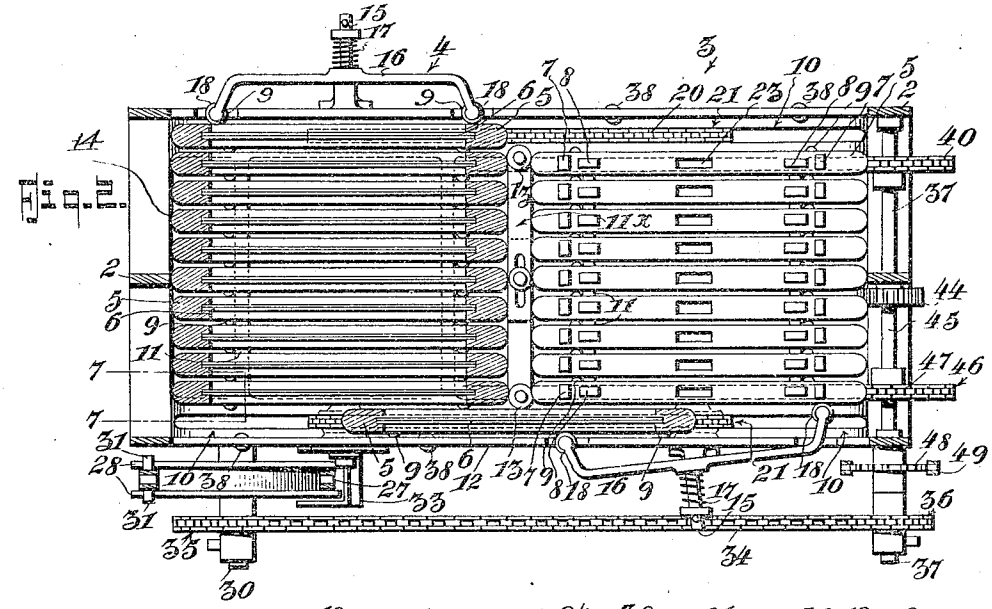

Fig. 6.

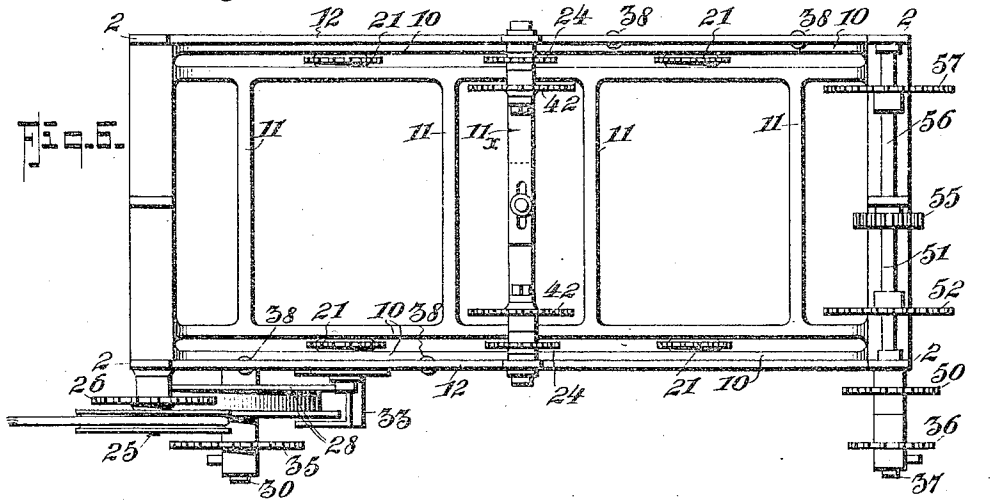

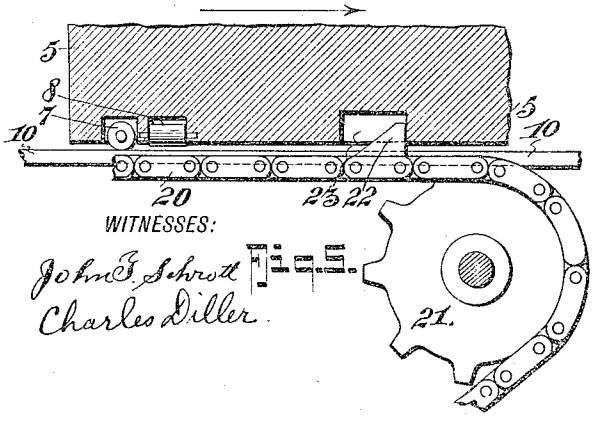

Fig. 5.

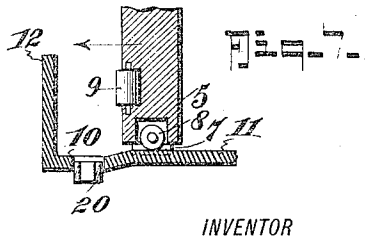

Fig. 7.

WITNESSES:

John J. Schrott

Charles Diller.

INVENTOR

J. A. Proulx.

BY

Geo. G. Deelerich & Co

ATTORNEYS.

THE NORRIS PETERS CO., PHOTO LITHO., WASHINGTON, D. C.

# UNITED STATES PATENT OFFICE.

JOSEPH ALFRED PROULX, OF VANCOUVER, BRITISH COLUMBIA, CANADA.

## ADVERTISING DISPLAY DEVICE.

1,125,393. Specification of Letters Patent. Patented Jan. 19, 1915.

Application filed October 29, 1913. Serial No. 798,015.

*To all whom it may concern:*

Be it known that I, JOSEPH ALFRED PROULX, a citizen of the Dominion of Canada, residing at Vancouver, in the Province of British Columbia, Canada, have invented certain new and useful Improvements in Advertising Display Devices, of which the following is a specification.

This invention relates to a mechanically operated advertising device of that class wherein advertising display cards or the like are arranged on edge in two groups within a suitable frame to expose the face of the card at each end of each group, the end card of one group being transferred to the other at the back and front alternately, so that each face of each card in the two groups is displayed for a sensible interval of time.

The invention comprises the particular construction of the card holding frames with provision to facilitate movement of the frames, both in the plane of the face, as when transferring from one group to the other, and in a direction normal to that face, as when traveling from back to front and from front to back in the groups.

The invention comprises also the mechanism by which the advertising card frames are transferred laterally from one group to the other with the necessary pause through a definite period of time for exhibit of the advertisement displayed on the several cards, and the manner of applying a spring pressure to the front of one group and to the back of the other, which spring pressure moves the card frames of each group to fill the space occupied by the frame transferred to the other group.

The invention is particularly described in the following specification, reference being made to the drawings by which it is accompanied, in which:

Figure 1 is a front elevation of the machine showing the same in its completed arrangement. Fig. 2 is a section taken substantially on the line 2—2 of Fig. 1, those frames on the right side being shown in plan. Fig. 3 is a detail view in the plane of line 3—3 on Fig. 1. Fig. 4 is a perspective view of an advertising card frame. Fig. 5, an enlarged detail showing the relation of the card frame with its transferring chain, and Fig. 6 is a plan of the machine frame showing the gear arrangement. Fig. 7 is a detail section on the line 7—7 of Fig. 2.

In these drawings 2 represents an open frame within which two groups 3 and 4 of advertising card frames 5 are carried. Extending across the back and the front of the frame 2 and within it are upper and lower transfer rails 10, each composed of two light bars which at the ends, where attached to the frame 2, have distance pieces to maintain them a short distance apart to allow the transferring mechanism to project between them. Extending across between the lower transfer rails under each group 3 and 4 are cross rails 11 which sustain the card frames 5 and allow them to move backward in one group and forward in the other group along them.

Immediately outside the transfer rails 10, both in the back and front of the machine, and projecting a short distance above them are face rails 12, against which the card frames 5 of each group are held by the pressure of a spring at the opposite end of the group, which spring will be described later.

In the line of division between the two groups 3 and 4, and at a distance from each face rail 12 corresponding to the thickness of a card holding frame 5, rollers 13 are mounted, which rollers may be adjustable in their distance from the face rail.

Within each card holding frame 5 an advertising display card 6 may be inserted in a manner providing for ready removal and change. Each frame has transverse rollers 7 in its upper and lower rails to facilitate movement along the transfer rails 10, and adjacent to these rollers are rollers 8 to bear on the cross rails 11 during movement along the rails. The rollers 7 should project a little farther out of the frame than the rollers 8, to sustain the latter clear of the rails 10 while transferring, and the upper side of the cross rails 11 should be slightly above the transfer rails 10. In the opposite face of each rail of the card frame 5 a roller 9 is inserted at each end, which rollers are designed to relieve the frame of friction with the face rails 12 and with the adjacent frame while a frame is being transferred from one group to the other. The vertical edges of the frames are rounded, as at 14, or are beveled from each face to facilitate entrance of the frame between the face rails 12 and the adjacent frame on the transfer from one group to the other. Secured to and projecting outward from each face rail 12 in alinement with the middle line of each group, studs 15 project outward from the

front of one group and from the back of the other group. On each stud 15 a roller carrying bar 16 is freely mounted and is pressed toward the face rail by a spring 17. The ends of this bar are turned toward the face rail 12, and on each end a small roller 18 is mounted, each roller passing through an aperture provided for it in the face rail to bear against the outer face of the card frame. The action of this roller bar is illustrated on the right hand side of Fig. 1, where a card frame 5 is shown in the act of transfer in the direction of the arrow from the group 4 to the group 3. As will there be seen the edge of the frame is inserted, between the roller 18 and the roller 13, or the roller 9 of the adjacent card frame, and the springs 17, top and bottom, are pressed back with the two to one leverage of the roller bar 16, and as the leading edge of the transferring frame reaches the other roller 18, it is also forced back with the two to one leverage, and the springs 17 then exert a distributed pressure over the width of the frame, pressing all the frames of that group against the face rail 12 at the back of the machine. As the face rollers 9 of the card frames are in one face of the top rail and in the opposite face of the bottom, rollers 38 should be provided in the top or bottom face rail 12, as the arrangement may require, at the opposite end of each group to the spring rollers 18.

The transfer of a card holding frame 5 from the left hand group 4 to the right hand group 3, at the front, and from the right hand group to the left hand group, at the back, is effected by an endless chain 20 having a projection 22 from one of its links which projection passes through between the transfer rails 10 and into engagement with either end of a recess 23 in the middle of the top and bottom rail of the frame 5 which may occupy a position on these rails. One chain 20 is arranged under the lower and one over the upper rails 10 at the front of the machine and under and over the rails 10 at the back and each chain passes around a triangularly arranged group of sheaves 21—24 of which 24 is a driving sprocket and 21 are only guide sheaves maintaining a length of the chain parallel to the rails 10. As shown in the drawing, the card carrying frames travel from left to right at the front and from right to left at the back, and as the top and bottom drive is taken from adjacent sides of the opposed chains, the chains must travel in opposite directions of rotation.

The alternating movement which it is desired shall be imparted to the card frames at the front and the back of the machine is attained by placing the engaging projection 22 of the top and bottom chains 20 which move the card frames at the back in an opposite position on the chains to what they are in the front. The chains 20 are operated from a first motion shaft 25 which derives its movement from any convenient source of power, and the required period of movement alternating with a period of rest is derived from this shaft 25 by an endless chain 27 taking around a sprocket wheel 26 secured on the shaft 25 and around a flanged sheave 28 secured on a shaft 30 rotatably mounted in the lower part of the frame 2 of the machine on one side. The chain 27 passes loosely around this sheave 28, the flanges of which are provided with diametrically opposed projections 32 to engage pins 31 projecting from certain links of the chain 27 at a distance apart equal to the circumferential distance apart of the projections 32 of the sheave. The chain 27 will thus move loosely on the sheave 28 without driving it until its pins 31 successively engage the projections 32 of the sheave when the shaft 30 is rotated through a complete revolution, each pin rotating the sheave through a half revolution before leaving it. If a shorter period of rest between movements is required than is obtainable with two pins in the length of the chain 27, two other pins may be provided at the required distance apart to give the period of rest required. To insure that the driving pins 31 do not free themselves from engagement with the projections 32 until each has completed the definite movement required of it, a guard 33 is secured to the frame of the machine which will hold the projecting pins in driving engagement with the projections of the sheave until the full movement releases them from such engagement. The intermittent movement imparted to this shaft 30 is conveyed to the several chains 20 by a chain 34 taking around a sprocket wheel 35 secured on the shaft 30 and around a similar wheel 36 secured on a shaft 37 extending across the other end of the machine. On the other end of this shaft 37 is secured a sprocket wheel 40 from which a chain 41 is carried around a sprocket wheel 42 secured to rotate with the driving sprocket 24 of the lower chain 20 at the back of the machine. At the front end of the shaft 37 is secured a gear wheel 43, the teeth of which mesh with those of a similar gear wheel 44 secured on a short shaft 45 on which is secured a sprocket wheel 46, around which passes a chain 47 which takes also around the sprocket wheel 42 of the driving sprocket 24 of the lower chain 20 at the front of the machine. The interposition of the gears 43—44 reverses the direction of movement of the lower chain 20 of the front of the machine from the direct drive of the chain at the back. To convey a similar movement to the upper chains 20, a sprocket wheel 48 is se-

cured on the shaft 37 around which sprocket a chain 49 passes and around a sprocket wheel 50 secured on a shaft 51 extending across the width of the machine at the top. On the front end of the shaft 50 is secured a sprocket wheel 52 which drives by means of a chain 53 the sprocket wheel 42 secured to rotate with the sprocket 24, which drives the chain 20 of the front of the machine, and at the other end of the shaft 51 the direction of rotation is reversed by gears 54—55 secured on shafts 51 and 56 on the latter one of which is secured a sprocket wheel 57 driving by a chain 58 the sprocket wheel 42 at the back of the machine. With this arrangement the adjacent or operative sides of the upper and lower chains 20 move in one direction at the front of the machine and in the opposite direction at the back of the machine. By different location of the driving projections 22 of the upper and lower chains 20 at the back, from those at the front, the chain projections 22 of one set of chains will be in moving engagement with a card frame while those of the other will not. By the intermittent movement imparted to the shaft 30 each card frame movement will alternate with a period of rest, that is the chains 20 will all move together for a distance represented by a revolution of the sprocket wheel 35 of the shaft 30. During one movement, the card moving projections 22 of the chains 20 in the front of the machine will engage and move a card holding frame from group 4 to group 3, during which movement the projections 22 of the chains 20 at the back of the machine are moving over their driving sprockets 24 and are not in engagement with a card holding frame. After a period of rest, the projections 22 of the front chains 20 will be traveling over their sprockets 24, and therefore out of engagement with a card frame, while the projections of the chains 20 at the back of the machine are in engagement with and are moving a frame from group 3 to group 4. A continual change of display from both faces of each card is thus effected, and the position of each display is changed from the face of one group to the face of the other, which change is advantageous from an advertising point of view.

The frame includes upper and lower partition bars $11^x$ which carry rollers 13.

Having now particularly described my invention, I hereby declare that what I claim as new and desire to be protected in by Letters Patent, is:

1. In an advertising machine, an open frame, having a display aperture, said frame including means for supporting and retaining within it two parallel groups of card holding frames and for allowing the transfer of a card holding frame from one group to the other at the end of each group, two parallel groups of card holding frames mounted in said open frame, resilient means positioned adjacent to the display aperture for pressing the frames of a group against the retaining means at the display aperture, said resilient means including a rockably mounted arm having end projections for engaging the card holding frames, and means for laterally transferring a card holding frame from one end of each group to the other group after an interval of time has elapsed since a previous transfer.

2. As an advertising machine, an open frame having display openings, two parallel groups of card holding frames mounted in said open frame, means for laterally transferring a card holding frame at predetermined intervals from one group to the other, and yieldably mounted rocker arms disposed adjacent the display apertures for continuously tending to press said frames of a group to move in the direction of the group.

3. An advertising machine comprising an open frame, two parallel groups of card holding frames mounted in said open frame, means for transferring, at predetermined intervals, card holding frames from one group to the other group, and means continuously tending to move groups of card holding frames bodily in a direction at right angles to the plane of movement of the frames during the transferring act, said last named means comprising a bar, a roller carried at each end of said bar, means for loosely mounting said bar at its mid-length and a spring continuously tending to press said bar in one direction.

4. An advertising machine comprising a frame having display apertures, two groups of card holding frames upwardly disposed within said open frame, means continuously tending to move said card holding frames across said first mentioned frame from the front to the back, means for moving the card holding frames at predetermined intervals longitudinally from one group to the other, said continuously tending means including a roller carrying bar, means for yieldably supporting said bar between its ends and a device continuously tending to press said bar in one direction.

5. An advertising machine, comprising an open frame, transfer rails at the top and bottom of the back and front of the frame, upper and lower face rails projecting within the transfer rails, cross rails extending between the transfer rails, two groups of card holding frames, rollers mounted across the thickness of the upper and lower edge of each frame to bear on the transfer rails, rollers in the plane of the frame to bear on the cross rails and rollers in the face of the upper rail and the opposite face of the lower rail and a recess

about the midlength of the upper and lower edges of the frame, an upper and a lower partition bar between the two groups of card holding frames, each bar having a roller at each end at the approximate thickness of the frame from each face rail, endless chains arranged to travel above and below each upper and lower transfer rail each chain having a projection from one of its links that will pass between the transfer rails and engage the recess in the edge of a card frame and projections from the chains on one face of the machine being at positions on the chain opposite to those on the chains of the other face, and means for imparting an intermittent movement to these chains.

6. An advertising machine, comprising an open frame having upper and lower transfer rails across the back and front each composed of two parts with a space between, upper and lower face rails at back and front projecting within the display space between the transfer rails, parallel groups of card holding frames, cross rails between the transfer rails affording support for the parallel groups of card holding frames, upper and lower division bars between these groups each having a roller at each end at a distance from the face rails approximately equal to the thickness of a card holding frame, studs projecting outward from the frame of the machine, a bar mounted on each stud each bar having a roller at each end adapted to bear on the end card frame, an endless chain moving parallel to each transfer rail and having a projection from a link to pass through the rails and into engagement with a card frame thereon, and means for imparting an intermittent movement to the chains.

In testimony whereof I affix my signature in presence of two witnesses.

JOSEPH ALFRED PROULX.

Witnesses:
ROWLAND BRITTAIN,
MAY WHYTE.

**Copies of this patent may be obtained for five cents each, by addressing the "Commissioner of Patents Washington, D. C."**